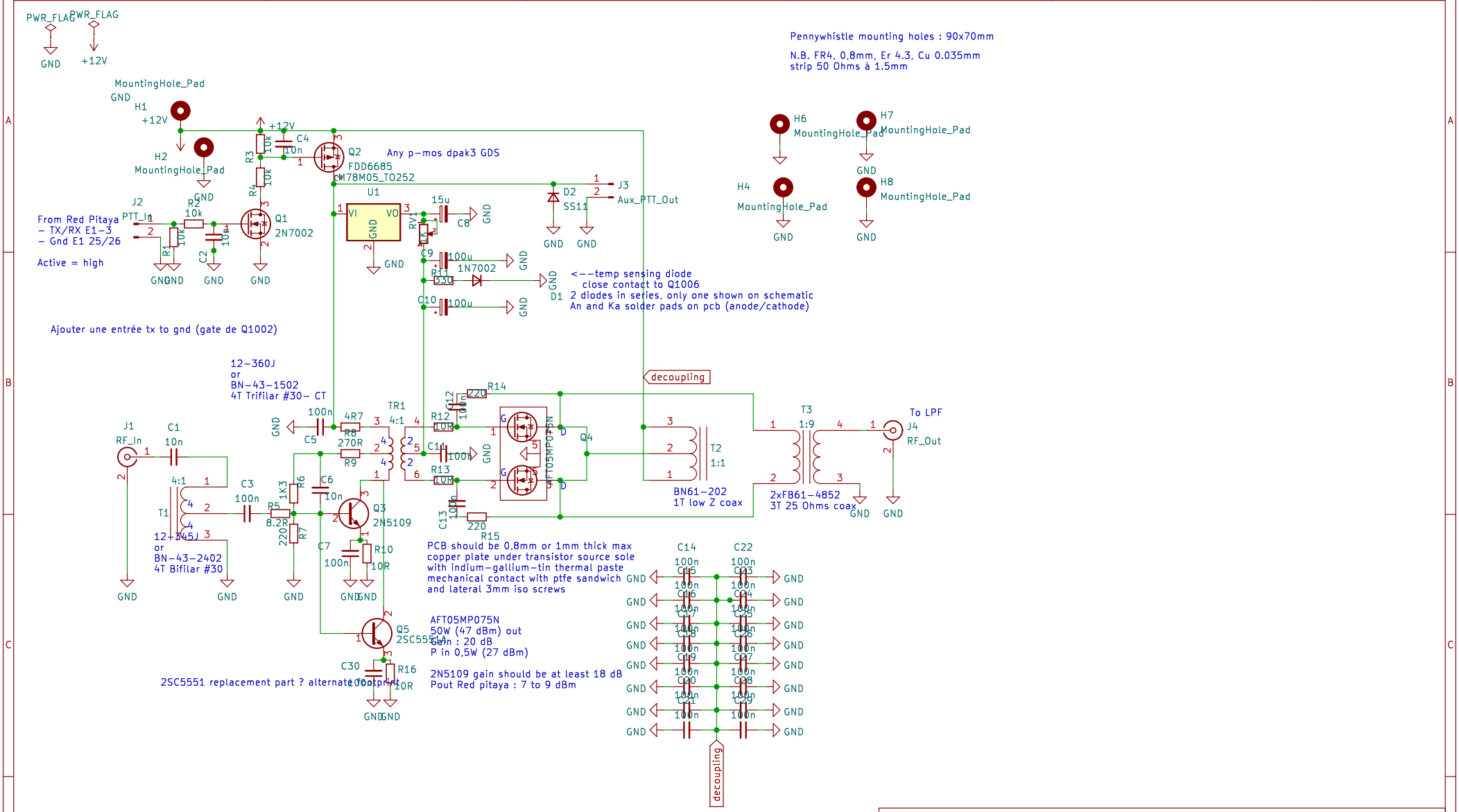
PWR_FLAG
GND
+12V
Pennywhistle mounting holes : 90x70mm
N.B. FR4, 0,8mm, Er 4.3, Cu 0.035mm
strip 50 Ohms à 1.5mm
MountingHole_Pad
H1
H2
H4
H6
H7
H8
Q2
FDD6685
Any p-mos dpak3 GDS
U1
LM78M05_TO252
Q1
2N7002
J2
PTT_In
From Red Pitaya
- TX/RX E1-3
- Gnd E1 25/26
Active = high
D2
SS11
J3
Aux_PTT_Out
1N7002
<--temp sensing diode
close contact to Q1006
2 diodes in series, only one shown on schematic
An and Ka solder pads on pcb (anode/cathode)
D1
Ajouter une entrée tx to gnd (gate de Q1002)
12-360J
or
BN-43-1502
4T Trifilar #30- CT
TR1
4:1
decoupling
AFT05MP075N
Q4
T2
1:1
BN61-202
1T low Z coax
T3
1:9
2xFB61-4852
3T 25 Ohms coax
To LPF
J4
RF_Out
J1
RF_In
T1
12+3+5J
or
BN-43-2402
4T Bifilar #30
Q3
2N5109
Q5
2SC5551
2SC5551 replacement part ? alternate footprint
PCB should be 0,8mm or 1mm thick max
copper plate under transistor source sole
with indium-gallium-tin thermal paste
mechanical contact with ptfe sandwich
and lateral 3mm iso screws
AFT05MP075N
50W (47 dBm) out
Gain : 20 dB
P in 0,5W (27 dBm)
2N5109 gain should be at least 18 dB
Pout Red pitaya : 7 to 9 dBm
C14
C22
https://ludens.cl/Electron/50Wamp/RP50Wampwm.png
https://ludens.cl/Electron/50Wamp/50Wamp.html
Autor : XQ6FOD Manfred
Sheet: 1/1
File: Ampli_0_5W.kicad_sch
Title: Projet Diomède (Διομήδης)
Size: A4
Date: 09/09/2022
Rev: 1.0
KiCad E.D.A. kicad (7.0.0)
Id: 1/1