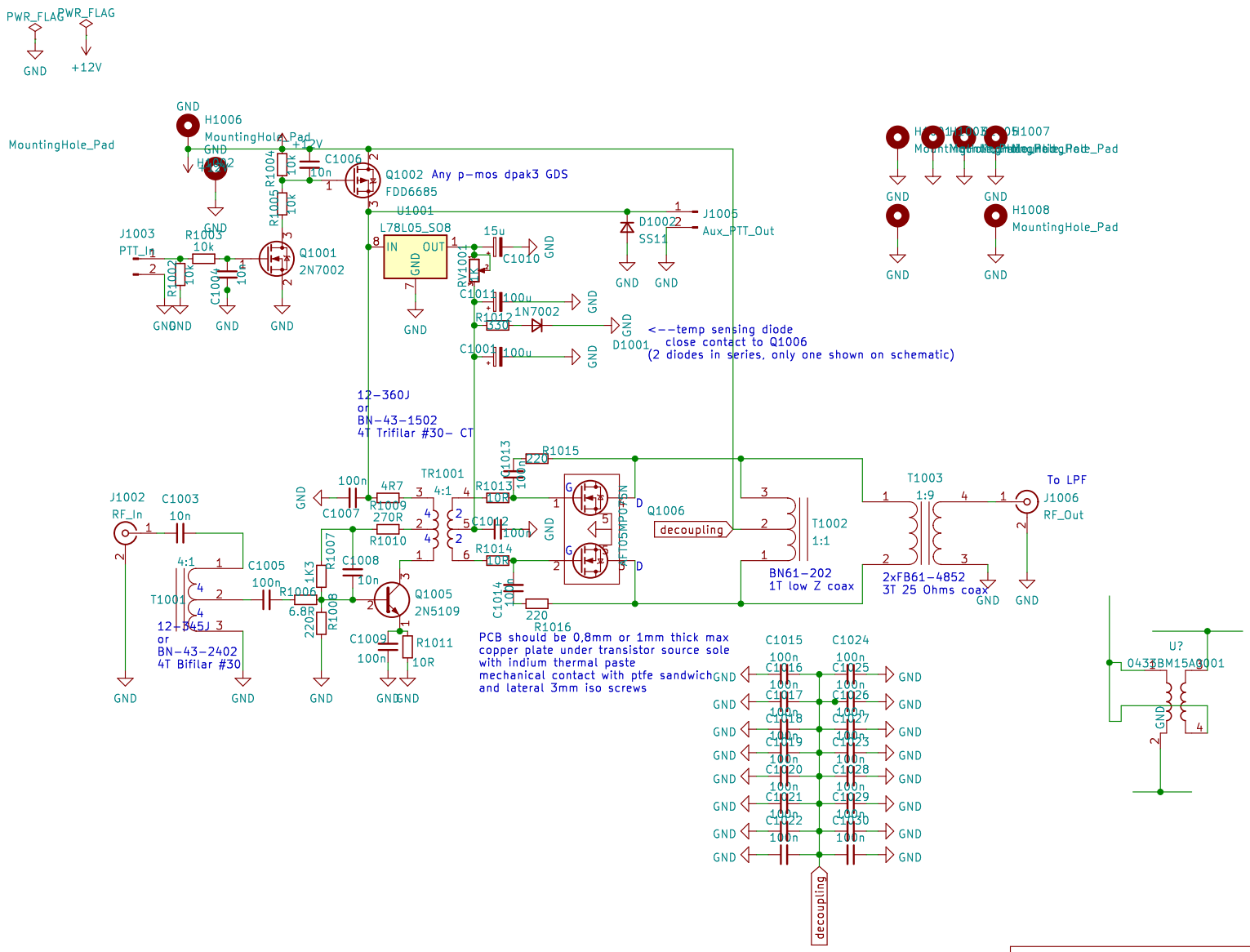

https://ludens.cl/Electron/50Wamp/RP50Wampwm.png

https://ludens.cl/Electron/50Wamp/50Wamp.html

Autor : XQ6FOD Manfred

Sheet: / 1/1
File: Ampli_0_5W.kicad_sch

Title: Projet Diomède (Διομήδης)

Size: A4	Date: 09/09/2022	**Rev:** 1.0
KiCad E.D.A. kicad (6.0.0)		Id: 1/1