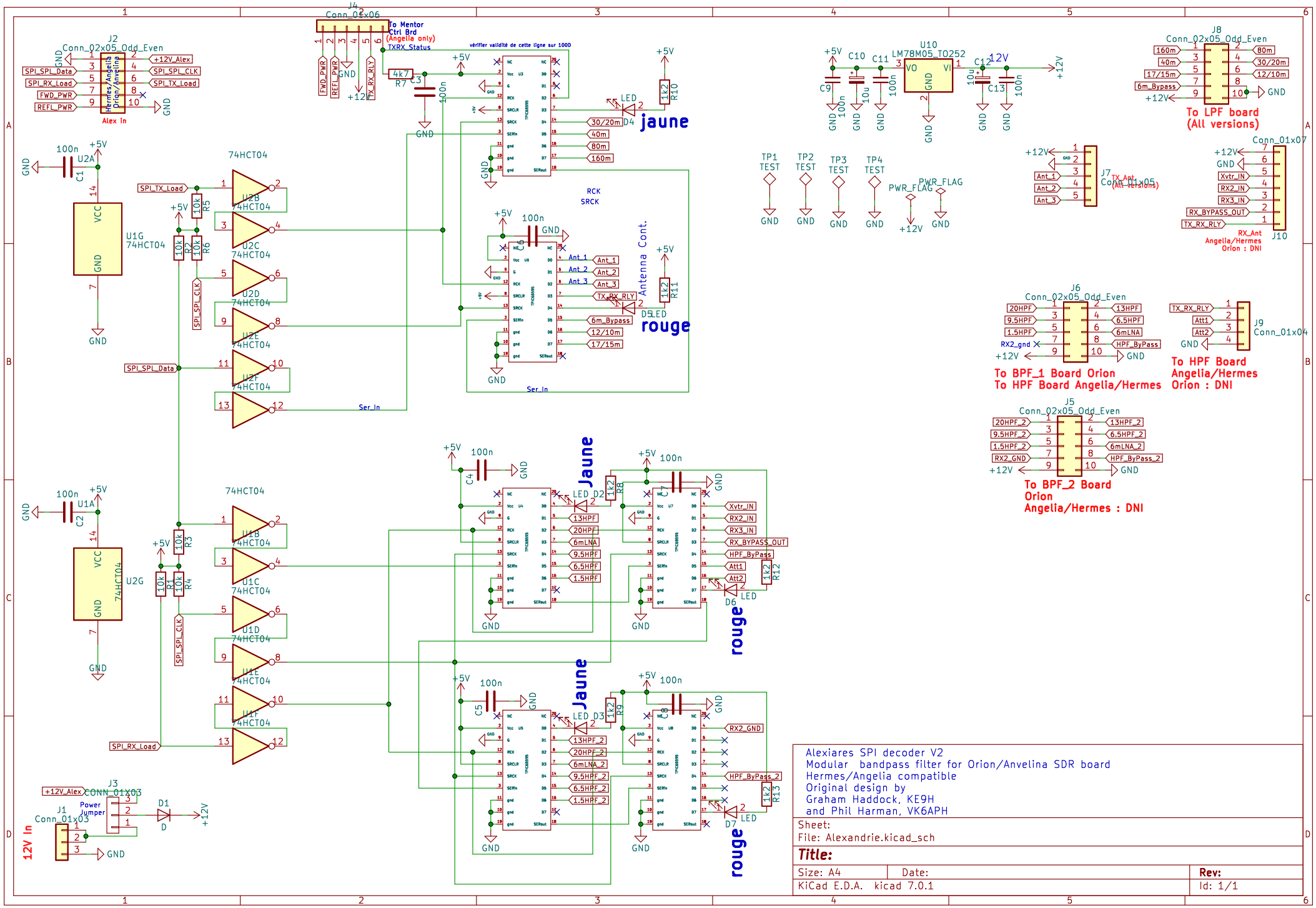
J2
Conn_02x05_Odd_Even
SPI_SPI_Data
SPI_RX_Load
FWD_PWR
REFL_PWR
+12V_Alex
SPI_SPI_CLK
SPI_TX_Load
Hermes/Angelia
Orion/Anvelina
Alex In
J4
Conn_01x06
To Mentor
Ctrl Brd
(Angelia only)
TXRX_Status
vérifier validité de cette ligne sur 100D
TX_RX_RLY
4k7
R7
C3
100n
LED
D4
jaune
1k2
R10
30/20m
40m
80m
160m
RCK
SRCK
Antenna Cont.
Ant_1
Ant_2
Ant_3
TX_RX_RLY
6m_Bypass
12/10m
17/15m
D5
rouge
Ser_In
74HCT04
U2A
U2B
U2C
U2D
U2E
U2F
U1G
U1A
U1B
U1C
U1D
U1E
U1F
U2G
C1
C2
10k
R5
R2
R6
R3
R1
R4
J3
CONN_01x03
Power
Jumper
D1
D
+12V
J1
Conn_01x03
12V In
U10
LM78M05_TO252
C9
C10
C11
C12
C13
10u
TP1
TEST
TP2
TP3
TP4
PWR_FLAG
J8
Conn_02x05_Odd_Even
160m
40m
17/15m
6m_Bypass
80m
30/20m
12/10m
To LPF board
(All versions)
J7
Conn_01x05
TX_Ant
(All versions)
Ant_1
Ant_2
Ant_3
Conn_01x07
Xvtr_IN
RX2_IN
RX3_IN
RX_BYPASS_OUT
TX_RX_RLY
J10
RX_Ant
Angelia/Hermes
Orion : DNI
J6
Conn_02x05_Odd_Even
20HPF
9.5HPF
1.5HPF
RX2_gnd
13HPF
6.5HPF
6mLNA
HPF_ByPass
To BPF_1 Board Orion
To HPF Board Angelia/Hermes
J9
Conn_01x04
Att1
Att2
To HPF Board
Angelia/Hermes
Orion : DNI
J5
Conn_02x05_Odd_Even
20HPF_2
9.5HPF_2
1.5HPF_2
RX2_GND
13HPF_2
6.5HPF_2
6mLNA_2
HPF_ByPass_2
To BPF_2 Board
Orion
Angelia/Hermes : DNI
C4
C5
C6
C7
C8
D2
D3
D6
D7
R8
R9
R12
R13
Jaune
rouge
TPIC6B595
13HPF
20HPF
6mLNA
9.5HPF
6.5HPF
1.5HPF
13HPF_2
20HPF_2
6mLNA_2
9.5HPF_2
6.5HPF_2
1.5HPF_2
Xvtr_IN
RX2_IN
RX3_IN
RX_BYPASS_OUT
HPF_ByPass
Att1
Att2
RX2_GND
HPF_ByPass_2
Alexiares SPI decoder V2
Modular bandpass filter for Orion/Anvelina SDR board
Hermes/Angelia compatible
Original design by
Graham Haddock, KE9H
and Phil Harman, VK6APH
Sheet:
File: Alexandrie.kicad_sch
Title:
Size: A4
Date:
Rev:
KiCad E.D.A. kicad 7.0.1
Id: 1/1