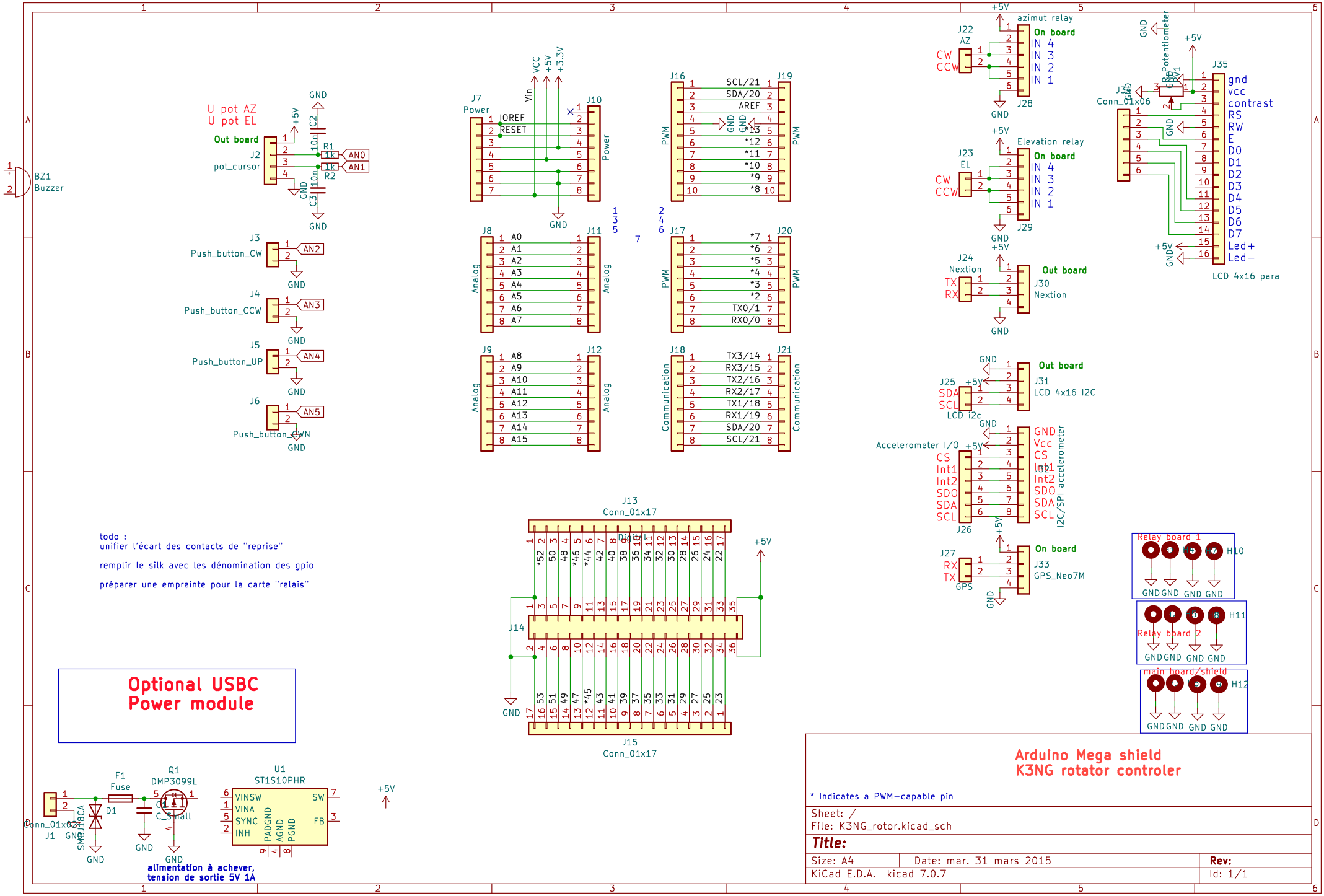
U pot AZ
U pot EL
Out board
J2
pot_cursor
BZ1
Buzzer
J3
Push_button_CW
J4
Push_button_CCW
J5
Push_button_UP
J6
Push_button_DWN
J7
Power
J10
Power
J8
Analog
J11
Analog
J9
Analog
J12
Analog
J16
PWM
J19
PWM
J17
PWM
J20
PWM
J18
Communication
J21
Communication
J22
AZ
azimut relay
On board
J28
J23
EL
Elevation relay
On board
J29
J24
Nextion
Out board
J30
Nextion
J25
LCD I2c
Out board
J31
LCD 4x16 I2C
Accelerometer I/O
J26
J27
GPS
On board
J33
GPS_Neo7M
J35
Conn_01x06
LCD 4x16 para
J13
Conn_01x17
J14
J15
Conn_01x17
todo :
unifier l'écart des contacts de "reprise"
remplir le silk avec les dénomination des gpio
préparer une empreinte pour la carte "relais"
Optional USBC
Power module
J1
F1
Fuse
Q1
DMP3099L
D1
SMDJ18CA
U1
ST1S10PHR
VINSW
VINA
SYNC
INH
PADGND
AGND
PGND
SW
FB
alimentation à achever,
tension de sortie 5V 1A
Relay board 1
H10
Relay board 2
H11
main board/shield
H12
Arduino Mega shield
K3NG rotator controler
* Indicates a PWM-capable pin
Sheet: /
File: K3NG_rotor.kicad_sch
Title:
Size: A4
Date: mar. 31 mars 2015
Rev:
KiCad E.D.A. kicad 7.0.7
Id: 1/1