MP- MEGAKIT CNC | Assembly guide

V1. 2023

GitHub

*Edited by **Alila Kais** & **Alila Mhamed***

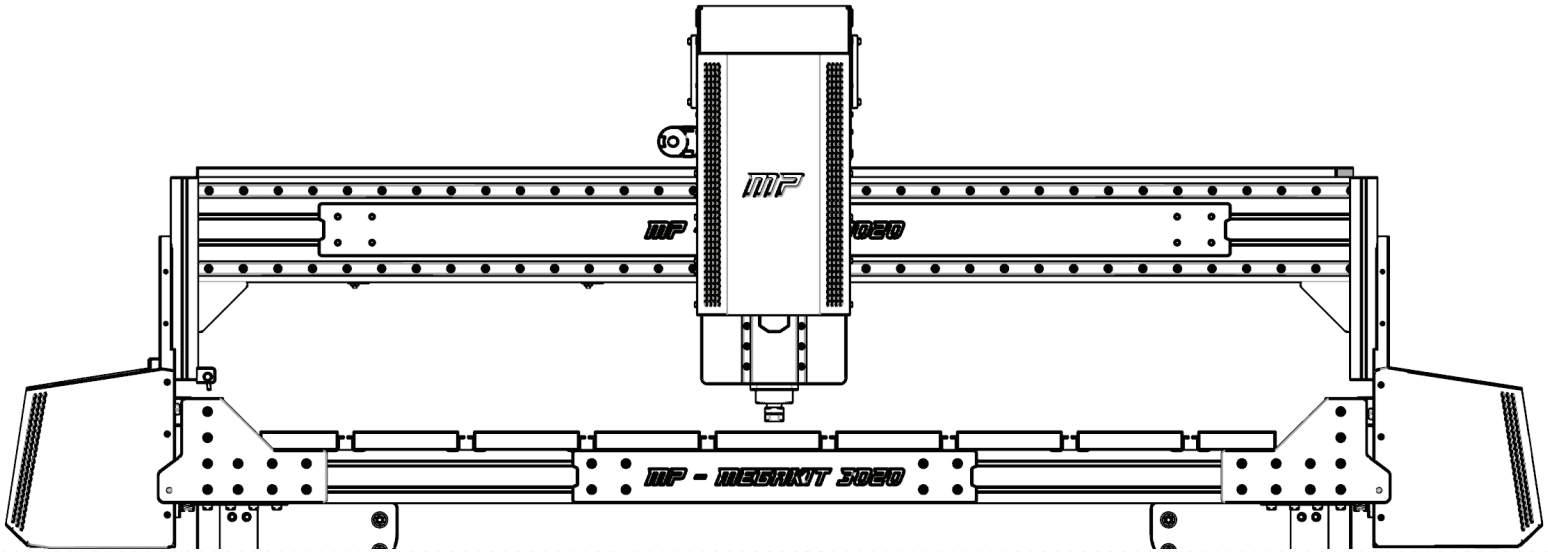

STE - FAB 619 | on demand fabrication

www.fab619.tn

Mail : alilamhamed@fab619.tn
alilakais@fab619.tn

GSM : (216) 24 63 10 38
(216) 54 54 47 31

Adresse : **(Tunis)** Bureau A8-8 sis Golden Towers, Centre Urbain Nord
(Monastir) Fabrique entrepreneuriale, Technopole neotex, 5012, Sahline

INMACHINES

FAB619

Authors

MP- MEGAKIT CNC has been designed and built by **Fab619 On-Demand-Fabrication** in collaboration with **InMachines Ingrassia GmbH &**

Team design

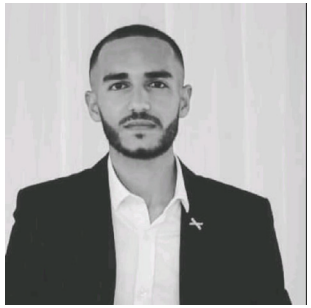

Kais ALILA | Alila Mhamed | ZOMITA Khayreddine | Ltifi Haythem | Samer Jawadi | Ahmed Kaddour belaid

The machine is part of the Digital4Job project for the open machine design and assembly workshop in Tunisia.

Acknowledgements

The development of this machine is part of Digital4Job Project implemented by :

- **Helmut-Schmidt-Universität Universität** der Bundeswehr Laboratorium Fertigungstechnik Holstenhofweg
- **OpenLab Hamburg**
- **GIZ** - Tunisie

Acknowledgements

Hardware design, CAD and PCB files, BOM, settings and other technical or design files are released under the following license:

- **CERN Open Hardware Licence Version 2 Weakly Reciprocal - CERN-OHL-W**
- **Assembly manual, pictures, videos, presentations, description text and other type of media are released under the following license:**
-
- **Creative-Commons-Attribution-ShareAlike 4.0 International - CC BY-SA 4.0**
- **License Owner InMachines Ingrassia GmbH**

Note

This documentation will be continuously improved as soon there are updates and/or improvements on the machine.

Disclaimer

This hardware/software is provided “as is”, and you use the hardware/software at your own risk. Under no circumstances shall any author be liable for direct, indirect, special, incidental, or consequential damages resulting from the use, misuse, or inability to use this hardware/software, even if the authors have been advised of the possibility of such damages.

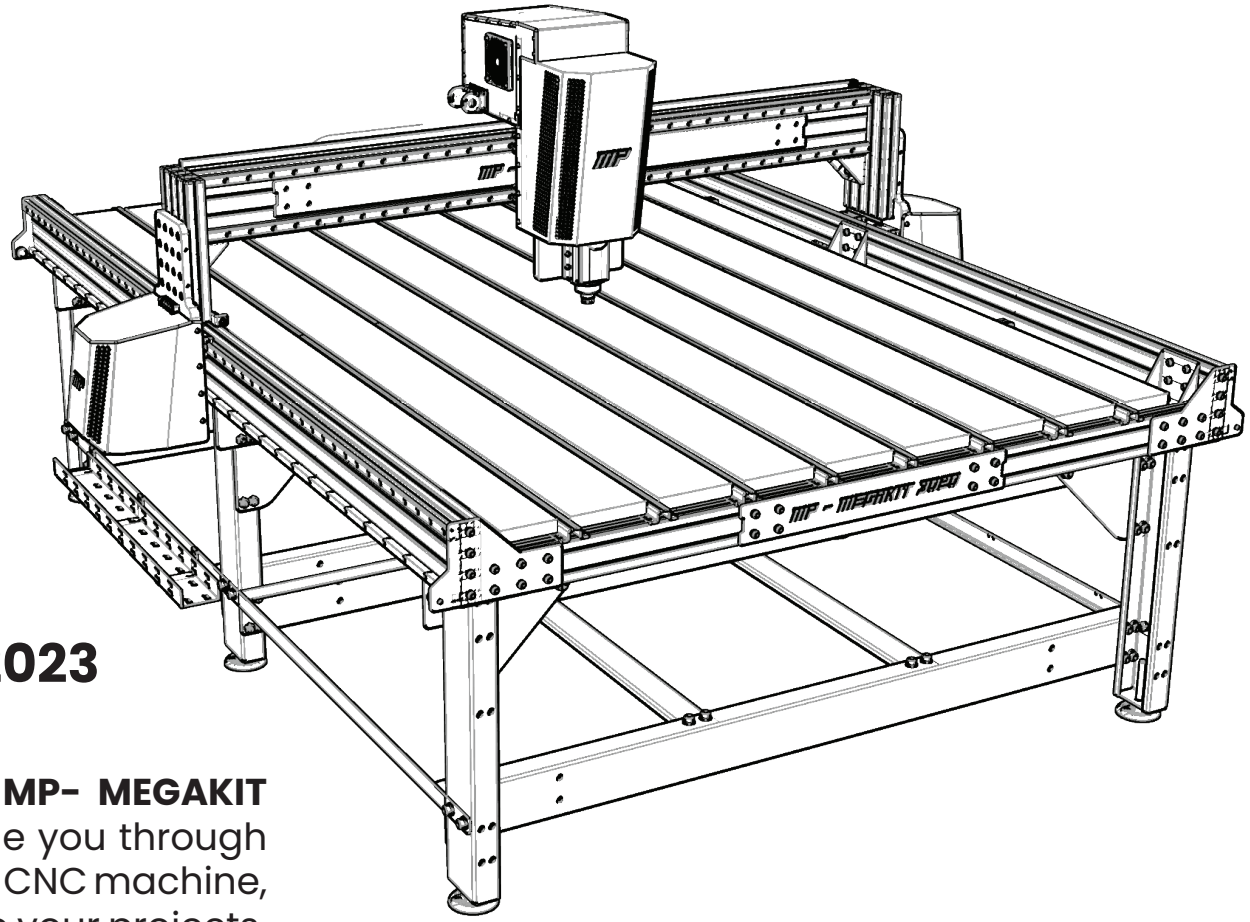

MP- MEGAKIT CNC3020 - V1. 2023

Welcome to the assembly guide for the **MP- MEGAKIT CNC3020 - V1. 2023** ! We're excited to guide you through the process of assembling this cutting-edge CNC machine, designed to bring precision and versatility to your projects. This compact yet powerful CNC is equipped with the latest features to help you turn your creative ideas into reality.

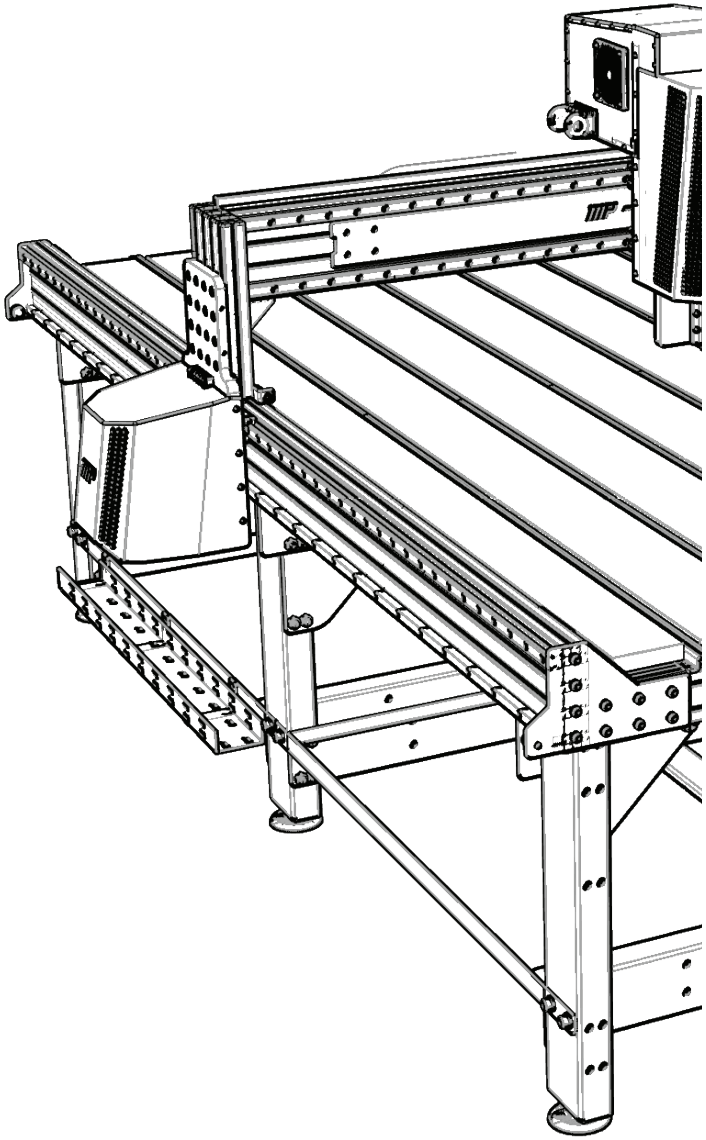

Key Features:

Precision Machining: The MP- MEGAKIT CNC is engineered to deliver precision machining with accuracy and repeatability, making it ideal for a wide range of applications.

Compact Design: Despite its high-performance capabilities, this CNC machine boasts a space-saving design, making it suitable for both small workshops and professional settings.

User-Friendly Interface: With an intuitive control interface, even beginners can quickly learn to operate the MP-Mini CNC V1. 2023 efficiently.

Versatility: Whether you're into woodworking, engraving, this CNC machine can handle a variety of materials and tasks, providing versatility to your projects.

Durable Construction: Built with high-quality materials and components, the MP- MEGAKIT CNC is designed to withstand the demands of continuous use.

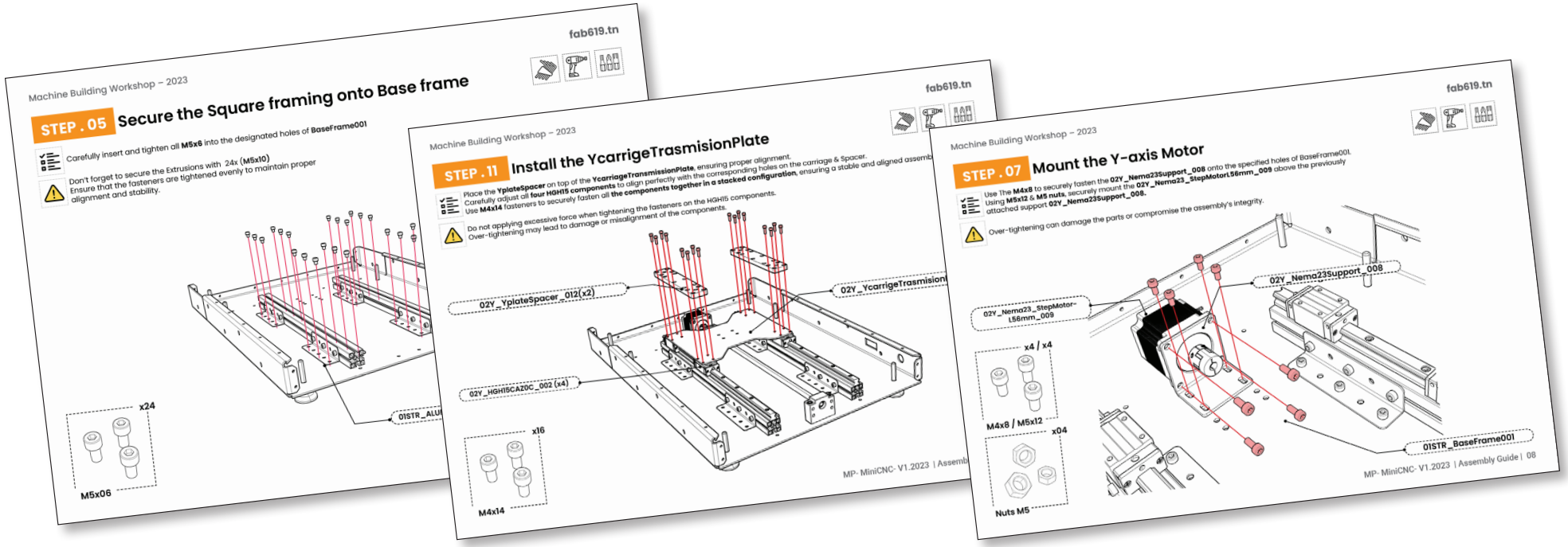

Our Assembly Guide

This assembly guide is designed to assist you step by step in assembling your **MP- MEGAKIT CNC3020 - V1. 2023**. Each section will provide clear and detailed instructions, along with professional tips and cautions, to ensure a smooth and successful assembly process.

Safety First

Before we begin, please ensure that you have read and understood all safety guidelines included with your CNC machine. Your safety and the safety of those around you is our top priority. Always wear appropriate personal protective equipment (PPE) when necessary.

Preparation

To get started, make sure you have all the necessary tools and materials ready as specified in the machine's manual. Clear and well-lit workspace is essential for a smooth assembly process.

Now, let's embark on this assembly journey together and turn your MP-Mini CNC V1. 2023 into a valuable tool for your creative endeavors. Follow each step meticulously, and don't hesitate to reach out if you have any questions or need assistance.

.....Let's begin!

01.Structure

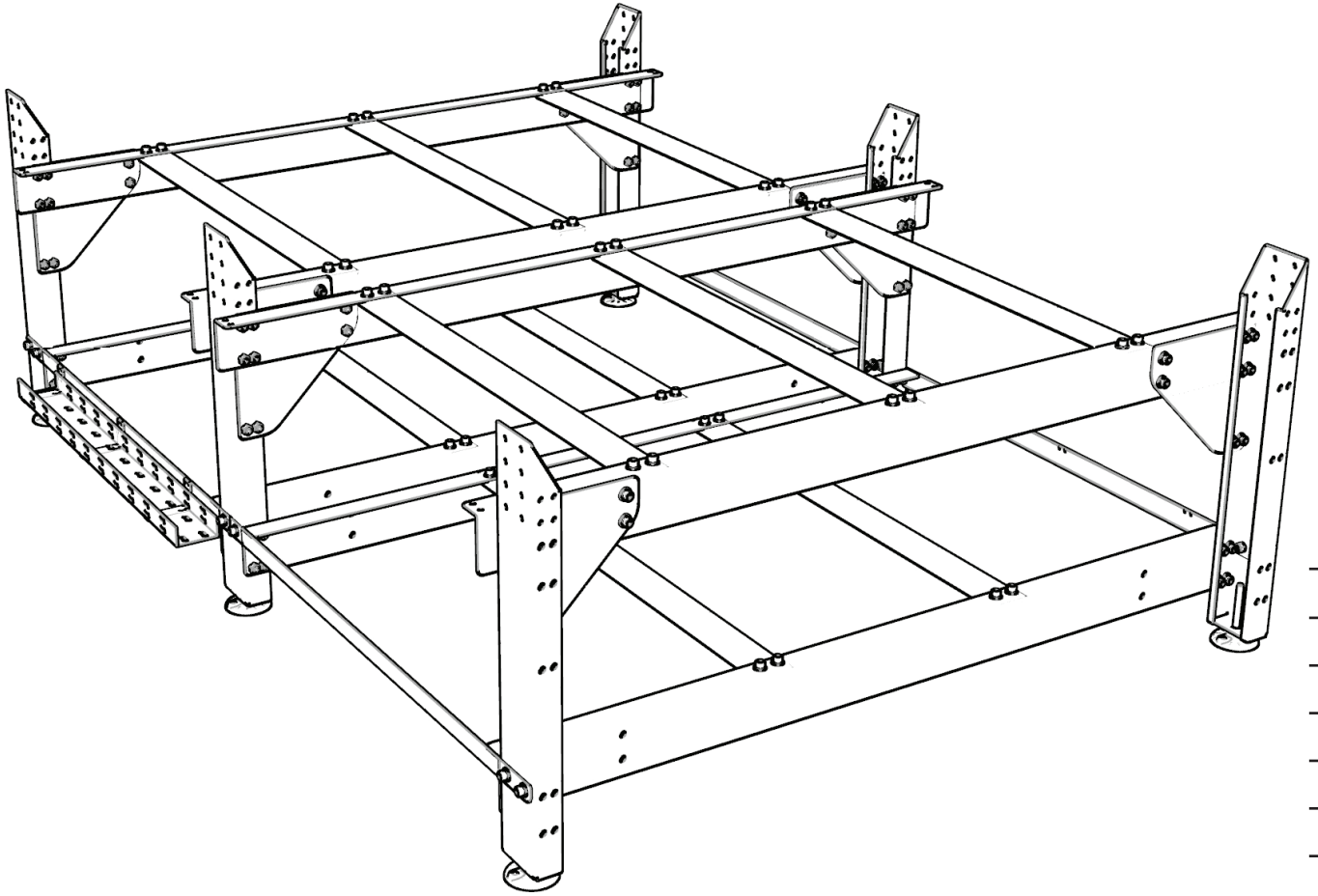

ID	Part.Name	QTE
1	01STR_FooterColumn001	6
2	01STR_FooterP902105_002	6
3	01STR_UpperBeamYSupL200_003	4
4	01STR_BotomBeamL190_004	4
5	01STR_FixtureBracket_005	8
6	01STR_AdjustmentPanCenter_006	10
7	01STR_AdjustmentPanEdges_L_007	2
8	01STR_AdjustmentPanEdges_R_008	2
9	01STR_HolderCablePath_009	3
10	01STR_CablePathProfile_010	1

02. Y axis

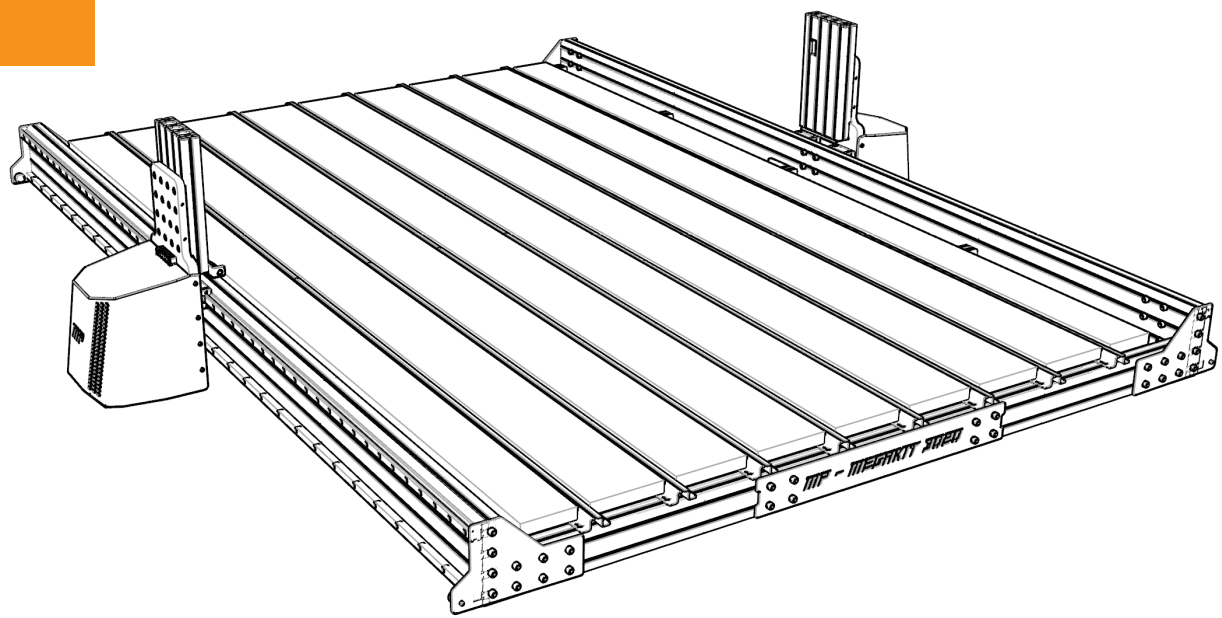

ID	Part.Name	QTE
11	02Y_Y AxisMotionRail_ALU45x190_2880_001	2
12	02Y_HGR25R2880C_002	4
13	02Y_RackGearModule_1.5_17mm_003	2
14	02Y_FramingALU45x90 1920mm _004	5
15	02Y_L Braket 4545 _005	4
16	02Y_T Braket 280_006	4
17	02Y_SquareAluBracket 8786_007	2
18	02Y_TimberBed_008	9
19	02Y_T-SlotExtrusion_009	16
20	02Y_T-SlotExtrusionPatch_010	64
21	02Y_YCarriageGuide Alu Plate_011	2
22	02Y_YCarrXGantryHolderExtrusion _012	2

ID	Part.Name	QTE
23	02Y_HGR25 Hiwin _013	4
24	02Y_Gearbox_ helical 1.25_1.5 _014	2
25	02Y_NEMA-34(SY86STH115-6004B)_015	2
26	02Y_WEIDU Stepper TB25XX, 6_016	2
27	02Y_cable chain95mm_017	1
28	02Y_Y-motorCover_Left_018	1
29	02Y_Y-motorCover_Right_019	1
30	02Y_Y-StopPlate_020	4
31	02Y_Y-Bumper_P315025.F15M06X1855_021	4
32	02Y_Brand Plate_022	2
33	02Y_Y-Sensor LJ12A3-4-Z/BX _023	1
34	02Y_Y-SensorHolder_024	1

03. X axis

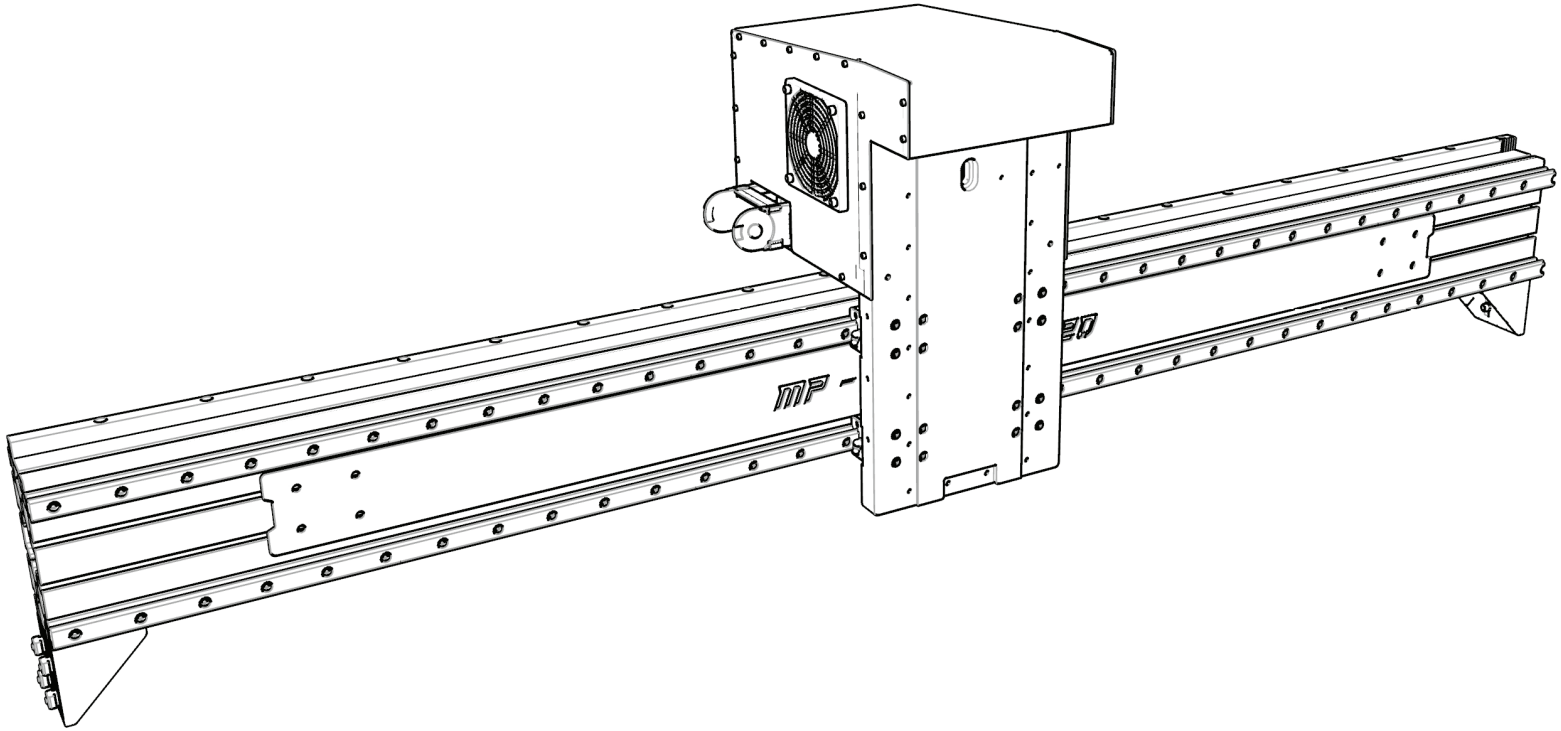

ID	Part.Name	QTE
35	03X_X AxisMotionRail_90x180_2000mm _001	1
36	03X_HGR25R2000C _002	2
37	03X_HGR25 Hiwin _003	4
38	03X_SquareAluBracket 8786_004	2
39	03X_RackGearModule_1.5_17mm_005	1
40	03X_CablePathProfile_006	1
41	03X_HolderCablePath_007	3
42	03X_XCarriageGuide Alu Plate_008	1

ID	Part.Name	QTE
43	03X_Gearbox HolderAluPlate _009	1
44	03X_Gearbox_ helical 1.25_1.5 _010	1
45	03X_NEMA-34(SY86STH115-6004B)_011	1
46	03X_WEIDU Stepper TB25XX, 6_012	1
47	03X_X motor Cover_013	1
48	03X_120mm Filter v7_014	2
49	03X_cable chain95mm_015	1
50	03X_Brand Plate_016	1

04. Z axis

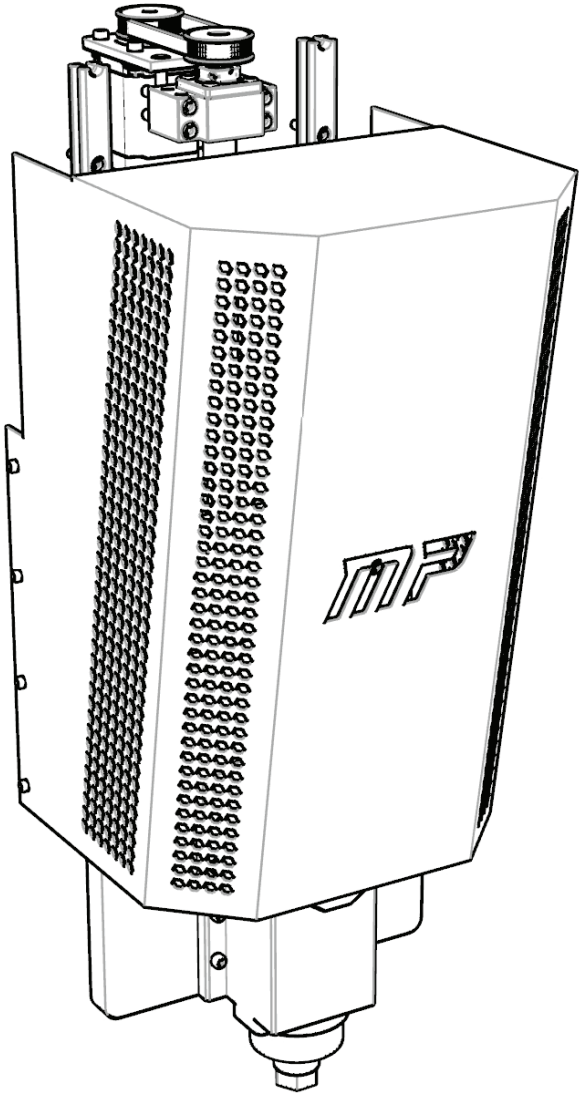

ID	Part.Name	QTE
51	04Z_Z spindle plate_001	1
52	04Z_Z carrige plate_002	1
53	04Z_Spindle Motor 2.2KW_003	1
54	04Z_Z Stepper Support_004	1
55	04Z_HGR20R500C_005	2
56	04Z_HGH20HIWIN_006	4
57	04Z_BK15 Unit _007	1
58	04Z_2- Ballscrew SFU2005 _008	1
59	04Z_SFU2005 BallScrew Nut _009	1
60	04Z_BF15 Unit _010	1
61	04Z_Nema23_StepMotorL57CM23 _011	1
62	04Z_GT2_60T_15mm _012	1
63	04Z_GT2_60T_8mm _013	1
64	04Z_GT2 Belt 10mm L300mm_014	1
65	04Z_Z-Sensor LJ12A3-4-Z/BX v619_015	1
66	04Z_WEIDU Stepper TB25XX, 6_016	1
67	02Y_Z-SpindlemotorCover_017	1

STEP . 01 Install machine Footers

Place the **01STR_FooterP902105_002** under the **01STR_FooterColumn001**.
Secure it with **M8 Nuts**.

It is strongly recommended to assemble the frame on a known flat surface (such as a solid table, work surface or similar). Otherwise, try to adjust leveling with the footers above.

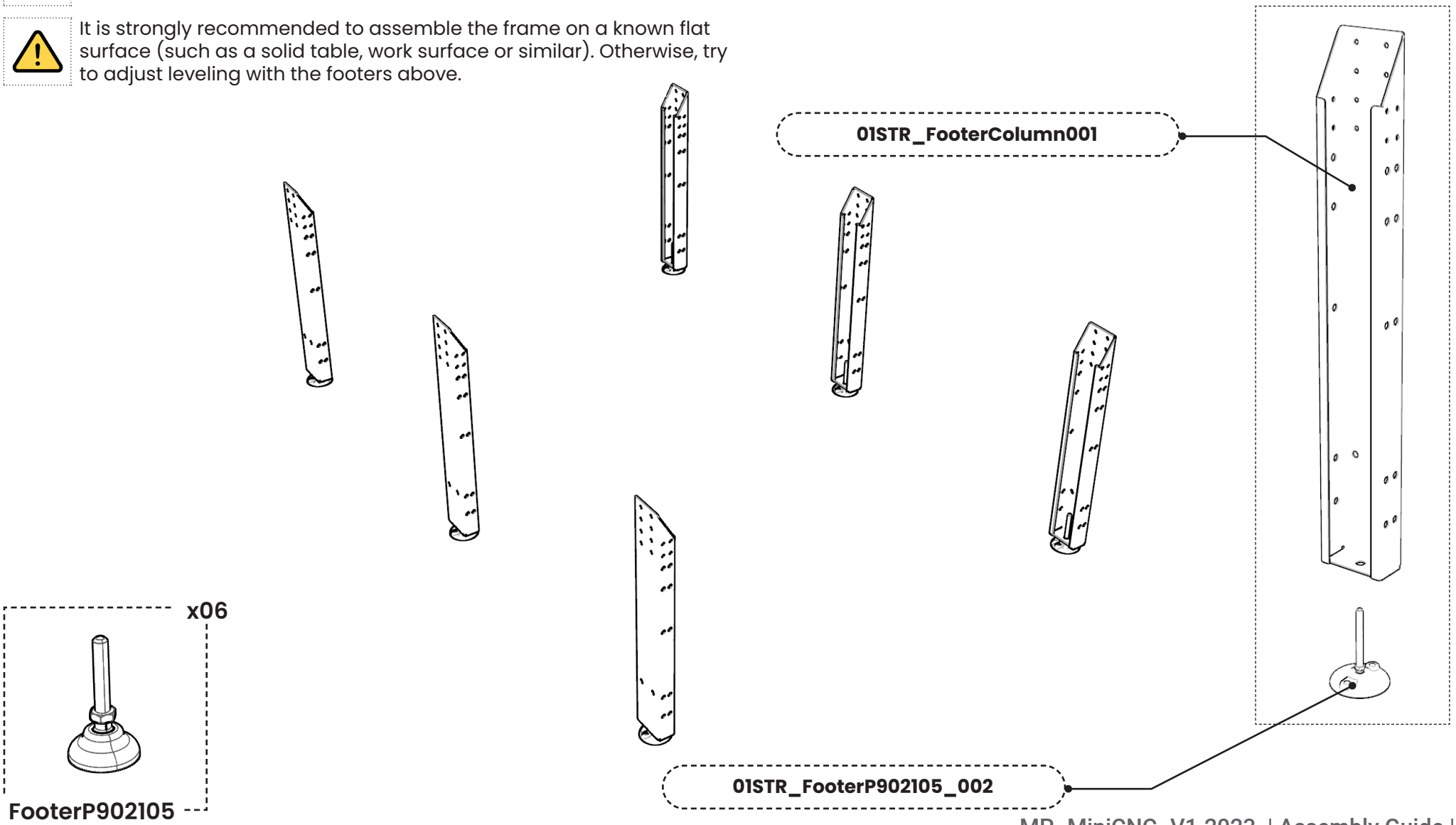

XXX Assemble the machine bridges

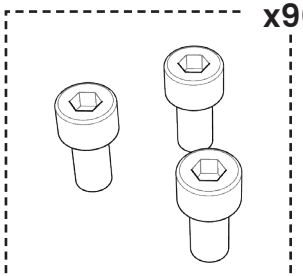

x96

M12x25

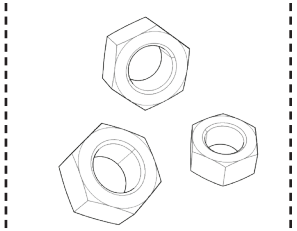

x96

Nuts M12

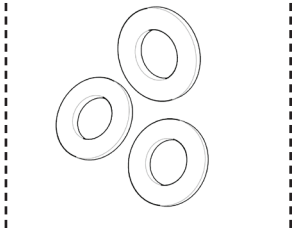

x96

Washer M12

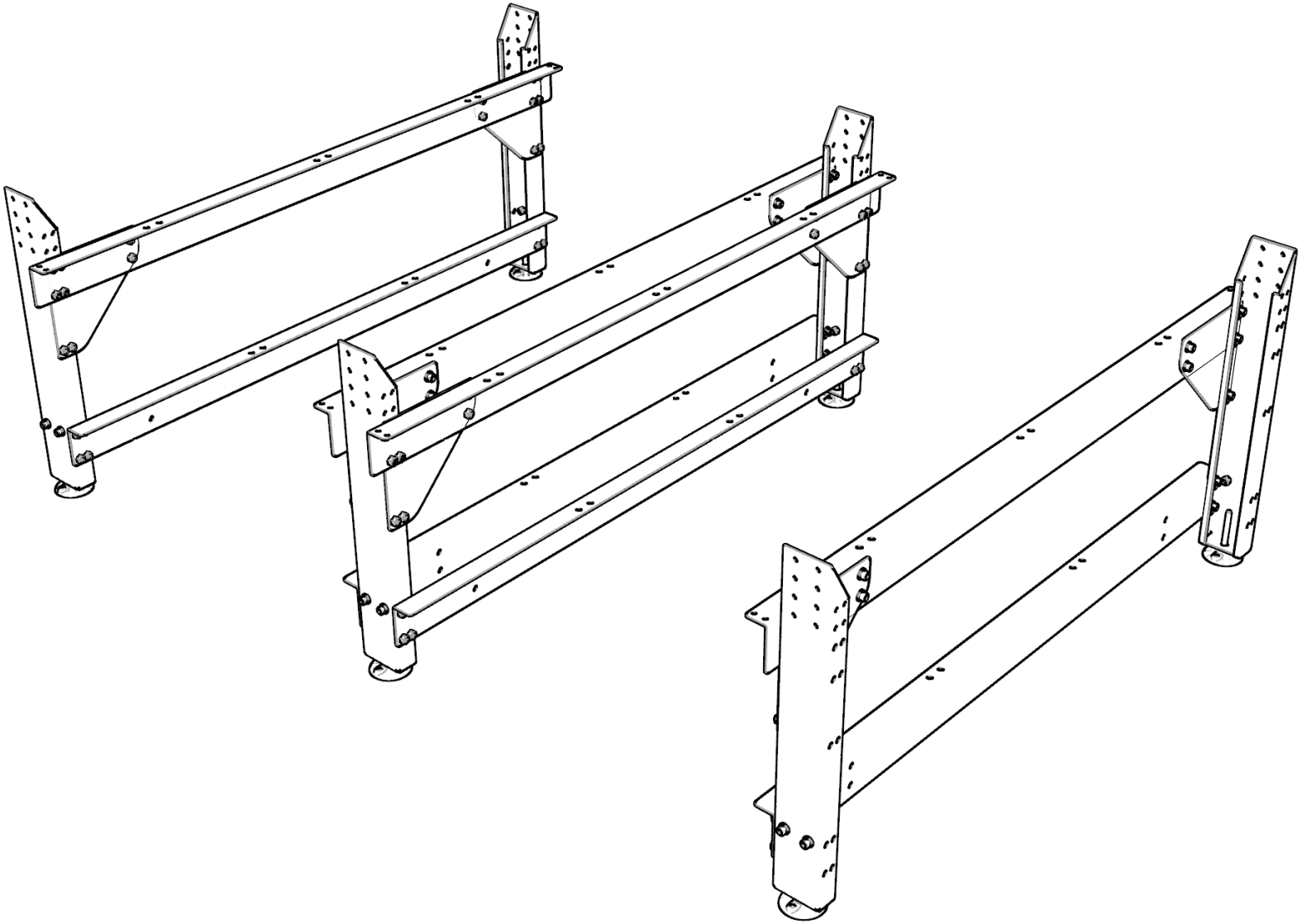

STEP . 02 Assemble the machine bridges (Part 1 -right)

Insert the **M12x25** & **M12 washer** successively through the **UpperBeamYSupL200** , **FixtureBracket**, **FooterColumn** and finally to the **M12 Nuts.**
Insert the **M12x25** & **M12 washer** successively through the **BotomBeamL190, FooterColumn** and finally to the **M12 Nuts.**

Tighten the set of screws to secure the bridge. Take your time to ensure precise alignment, as this is crucial for the overall stability and functionality of the assembly.

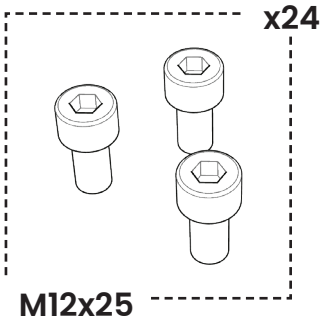

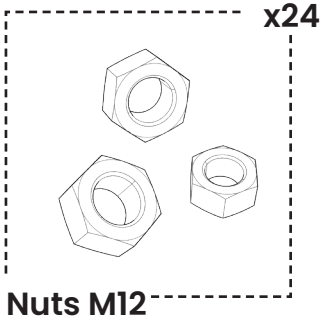

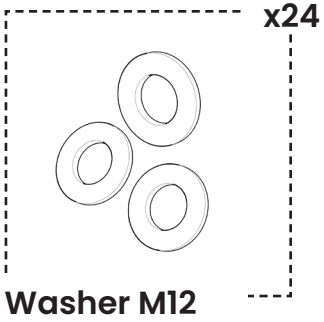

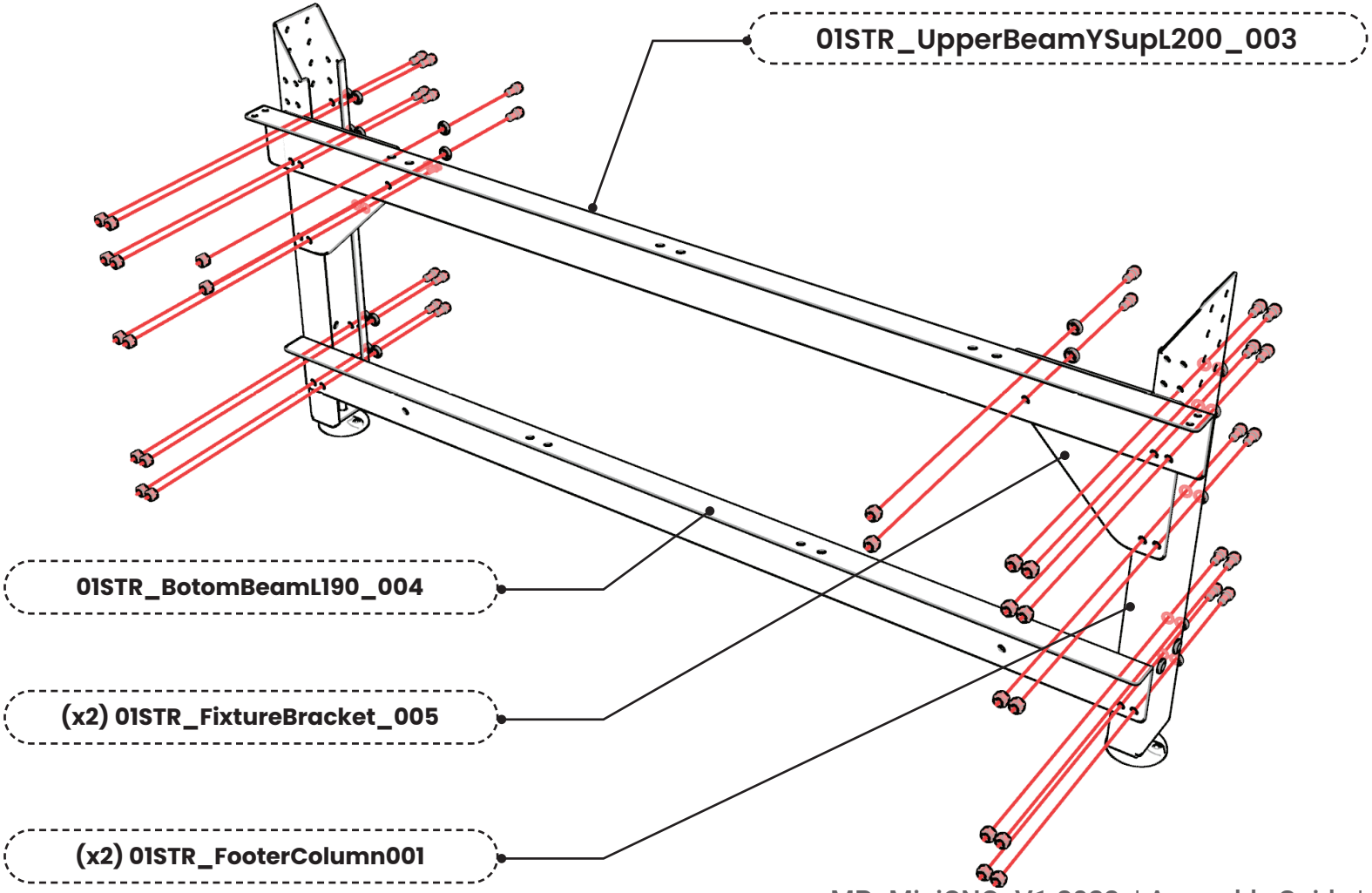

STEP . 03 Assemble the machine bridges (Part2 - left)

Insert the **M12x25** & **M12 washer** successively through the **UpperBeamYSupL200** , **FixtureBracket**, **FooterColumn** and finally to the **M12 Nuts.**
Insert the **M12x25** & **M12 washer** successively through the **BotomBeamL190, FooterColumn** and finally to the **M12 Nuts.**

Tighten the set of screws to secure the bridge. Take your time to ensure precise alignment, as this is crucial for the overall stability and functionality of the assembly.

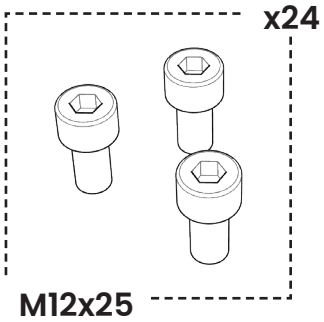

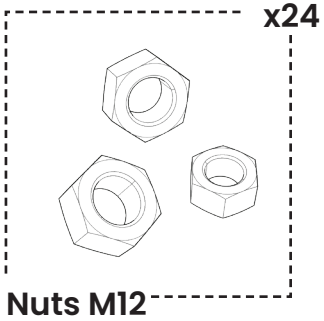

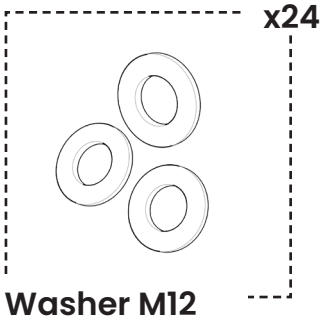

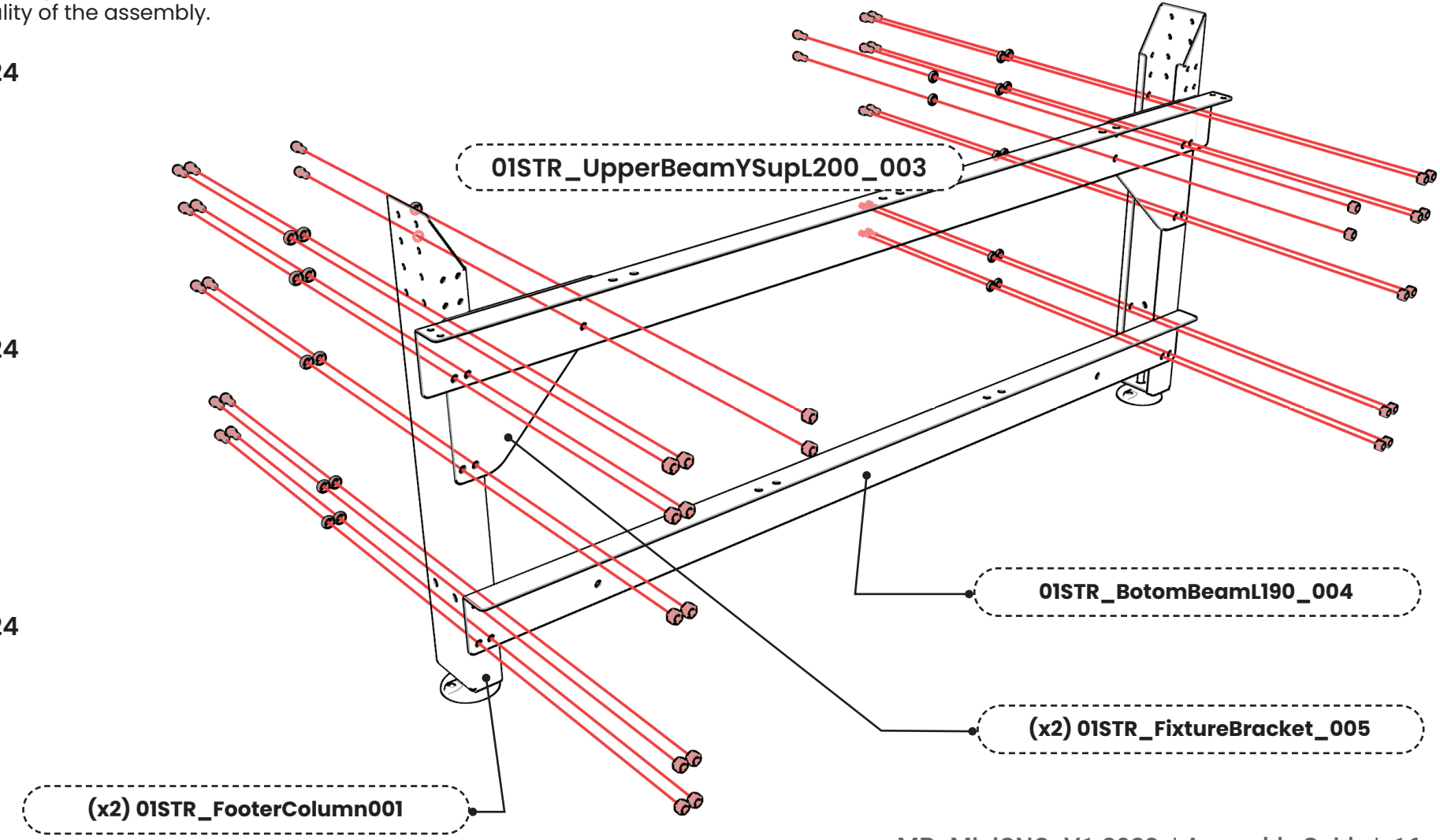

STEP . 04 Assemble the machine Middle bridge (part3)

Insert the **M12x25** & **M12 washer** successively through the **UpperBeamYSupL200** , **FixtureBracket**, **FooterColumn** and finally to the **M12 Nuts. (x2)**
Insert the **M12x25** & **M12 washer** successively through the **BotomBeamL190, FooterColumn** and finally to the **M12 Nuts. (x2)**

Tighten the set of screws to secure the bridge. Take your time to ensure precise alignment, as this is crucial for the overall stability and functionality of the assembly.

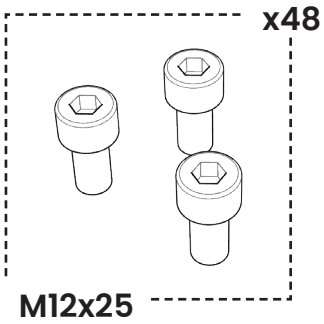

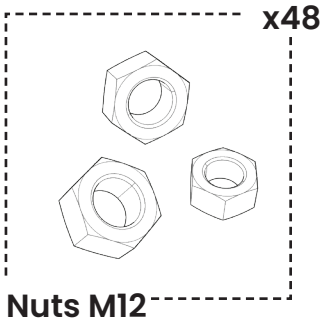

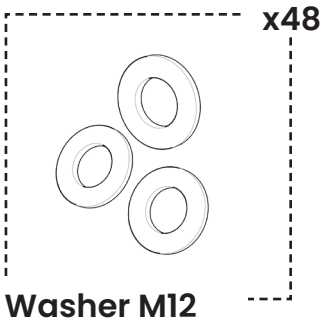

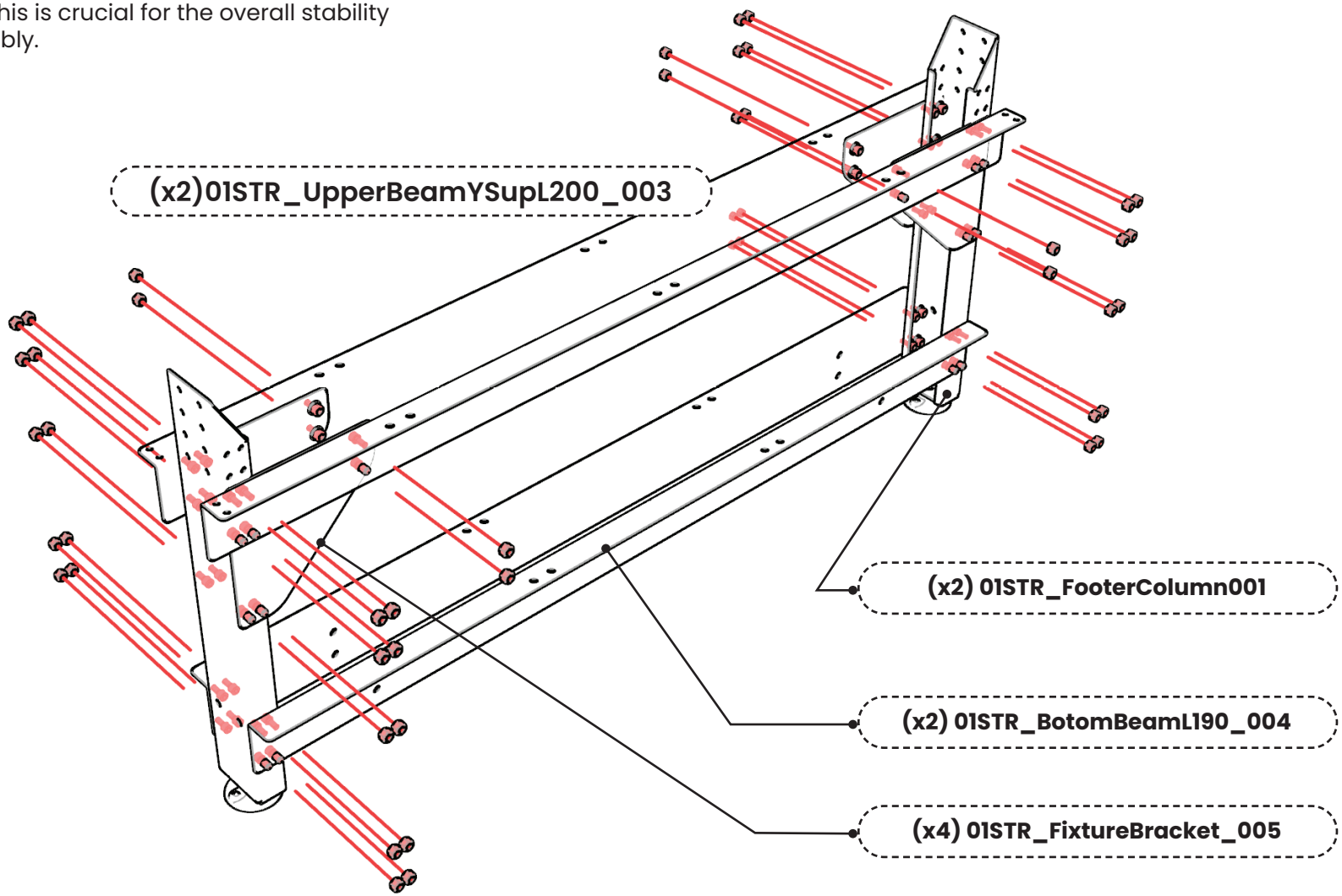

STEP . 05 Assemble the machine Adjustments Pans (Center)

Place the **AdjustmentPanCenter (x10)** on the **UpperBeamYSupL200** and **BotomBeamL190** .
Insert **M12x25** & **M12 washer** to to ensure precise alignment.

Do not tighten the screws before placing until the next step.
Carefully adjust the bridges to align them with middle bridge.
Ensure precise alignment for accurate and efficient assembly.

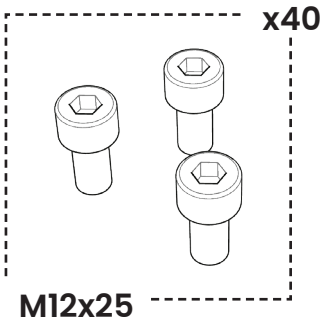

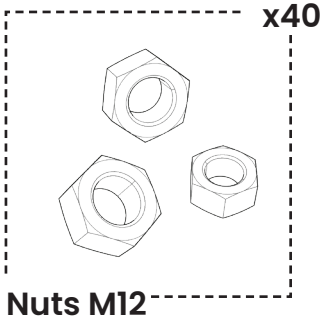

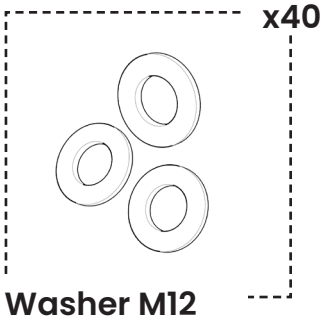

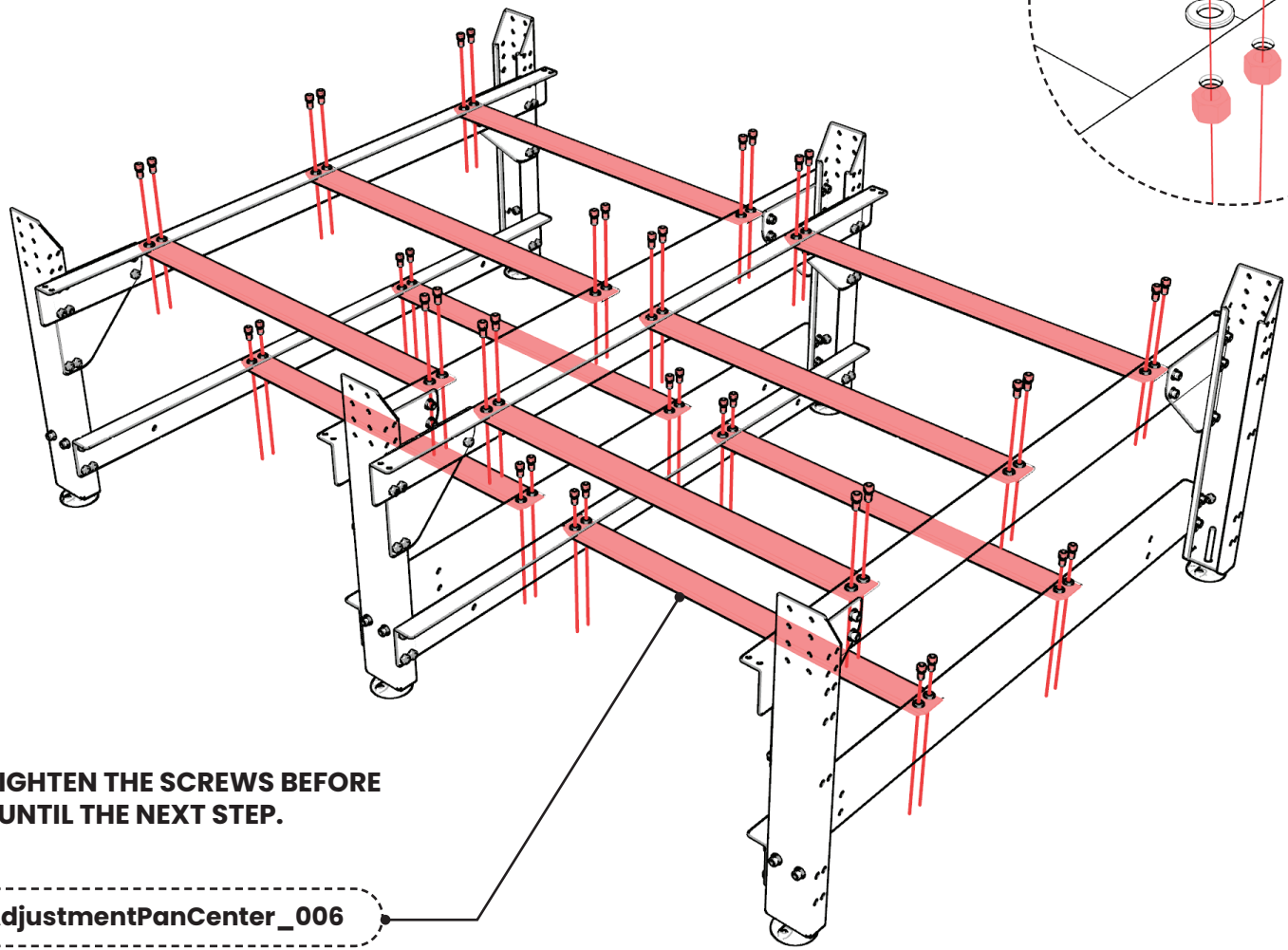

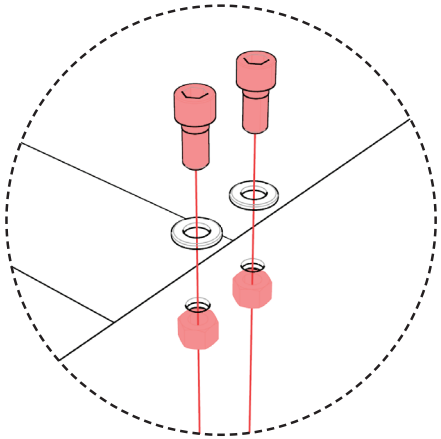

DO NOT TIGHTEN THE SCREWS BEFORE PLACING UNTIL THE NEXT STEP.

STEP . 06 Assemble the machine Adjustments Pans (Edges)

Place the **AdjustmentPanEdges (x4)** on the **FooterColumns (x6).**
Insert **M12x25** & **M12 washer** to to ensure precise alignment.
Secure the machine frame with **M12 nuts.**

Make sure that 4x pieces are properly aligned as shown below and fits onto the specified holes.
Take your time to ensure precise alignment, as this is crucial for the overall stability and functionality of the assembly.

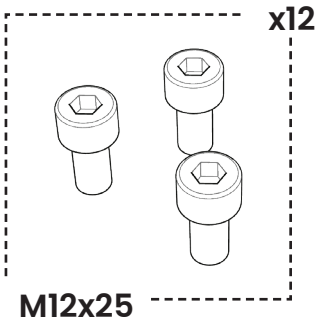

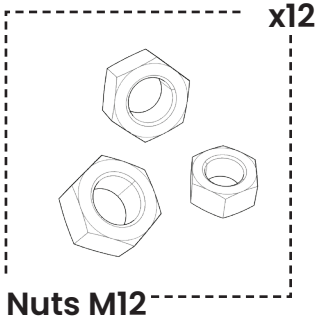

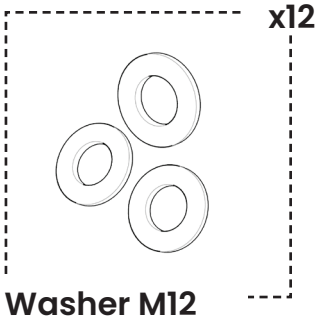

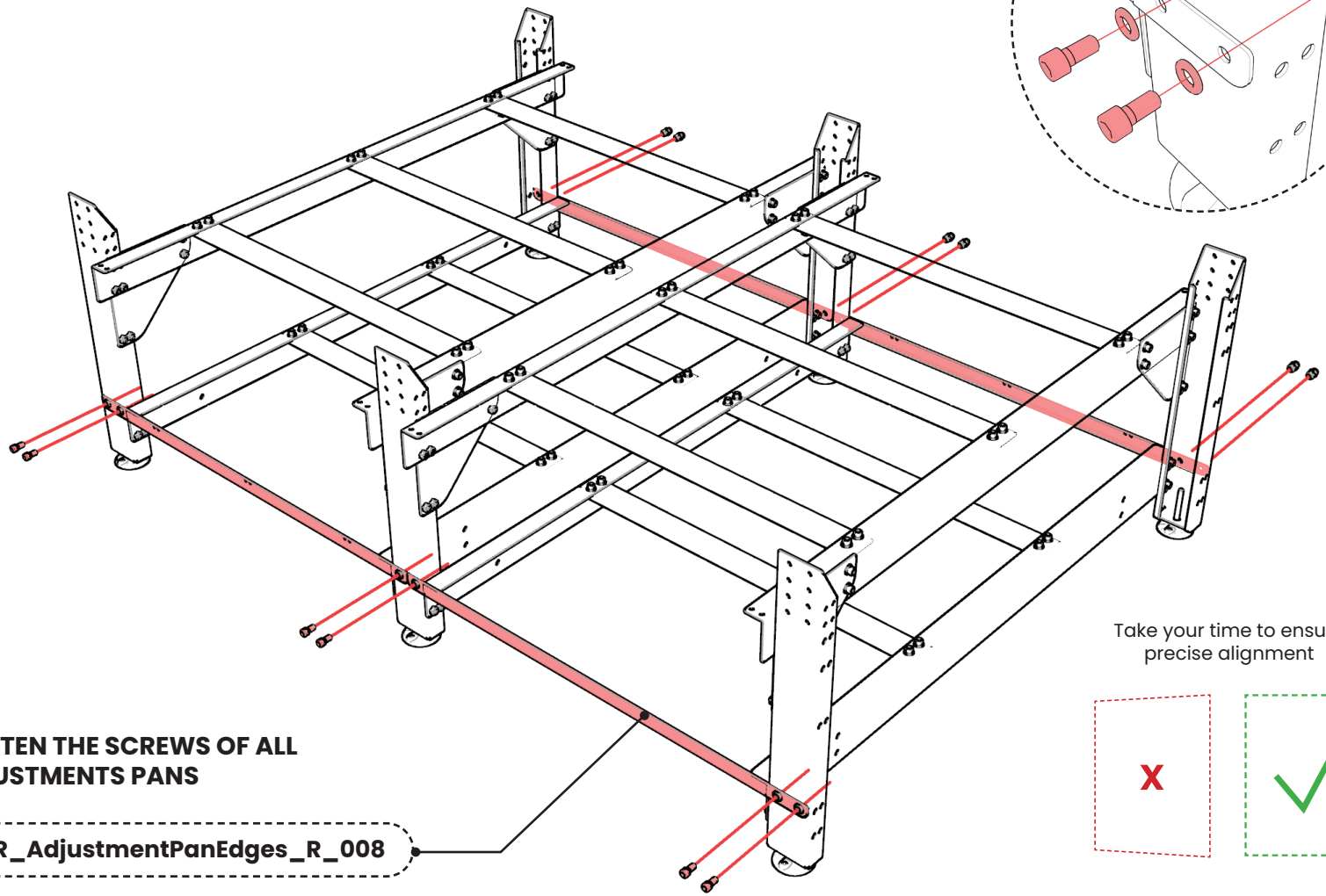

TIGHTEN THE SCREWS OF ALL ADJUSTMENTS PANS

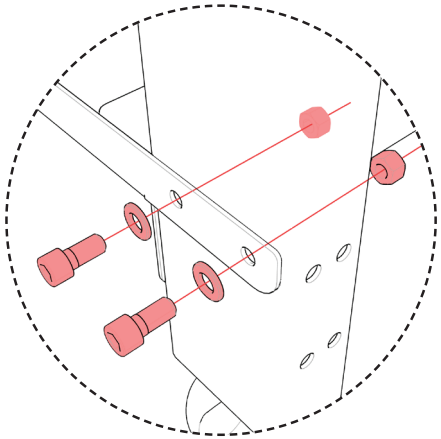

Take your time to ensure precise alignment

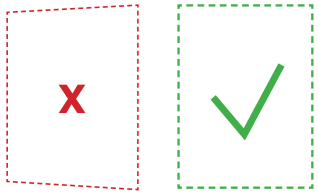

PAUSE FOR A BREAK

Acknowledging the importance of maintaining focus and well-being during the assembly process, take a short break to rest and recharge. Enjoy a brief break before proceeding to the final assembly steps. It's essential to work comfortably and stay alert for the best results.

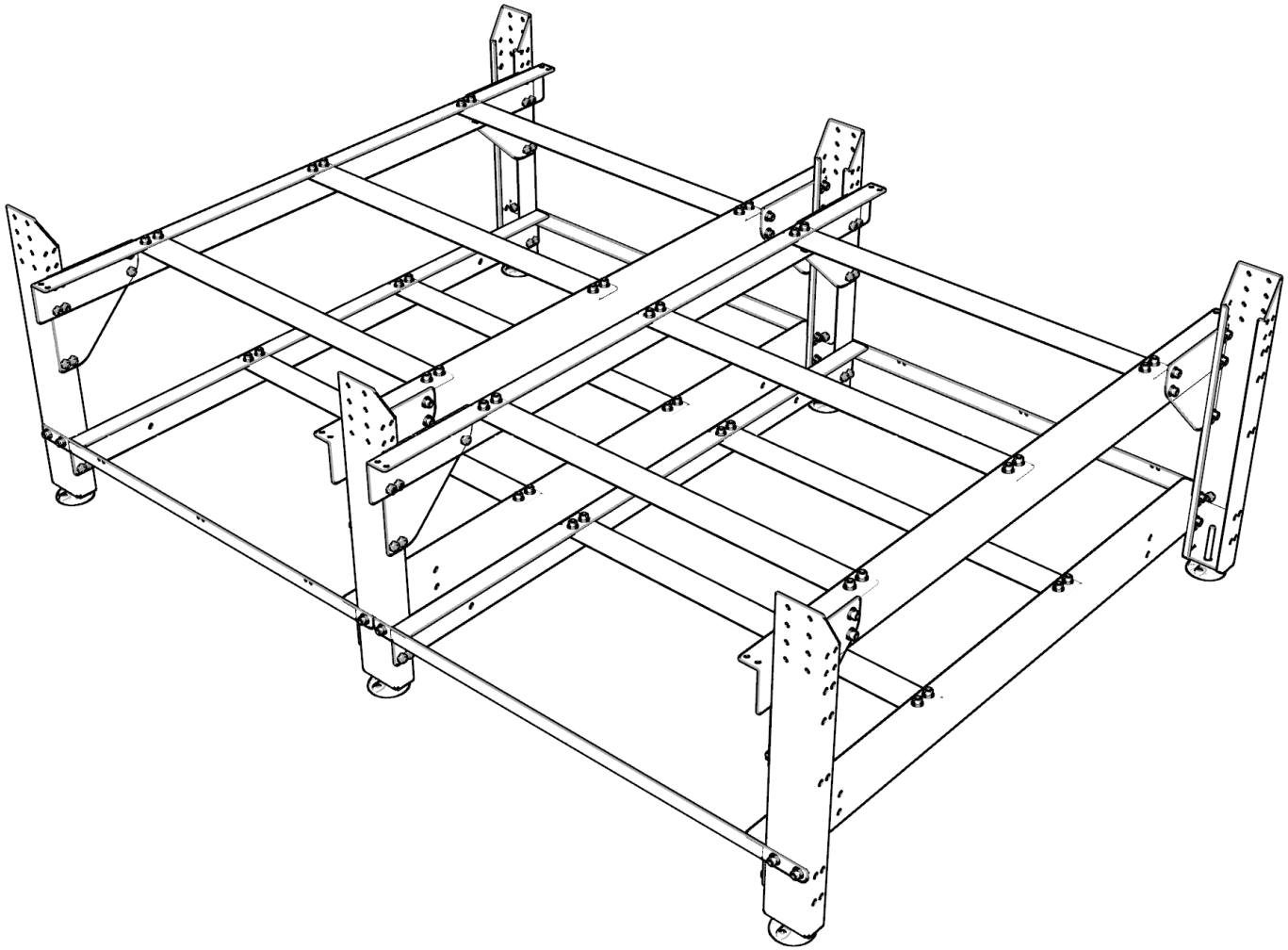

STEP . 07 Assemble the machine Y-Rails (Left)

Insert the **M6x25 /20** through the rails and into the **M6 T-slots**
Carefully Place the Y-guiding rails **HGR25R2880C_002 & RackGearModule** on the Extrusion.
Carefully tighten the fasteners to securely attach the Y-guiding rails to the extrusion

When tightening the fasteners, exercise caution to prevent the **HGR25R2880C_002** from sliding out of rails. Ensure that the fasteners are tightened evenly to maintain proper **alignment and stability**.

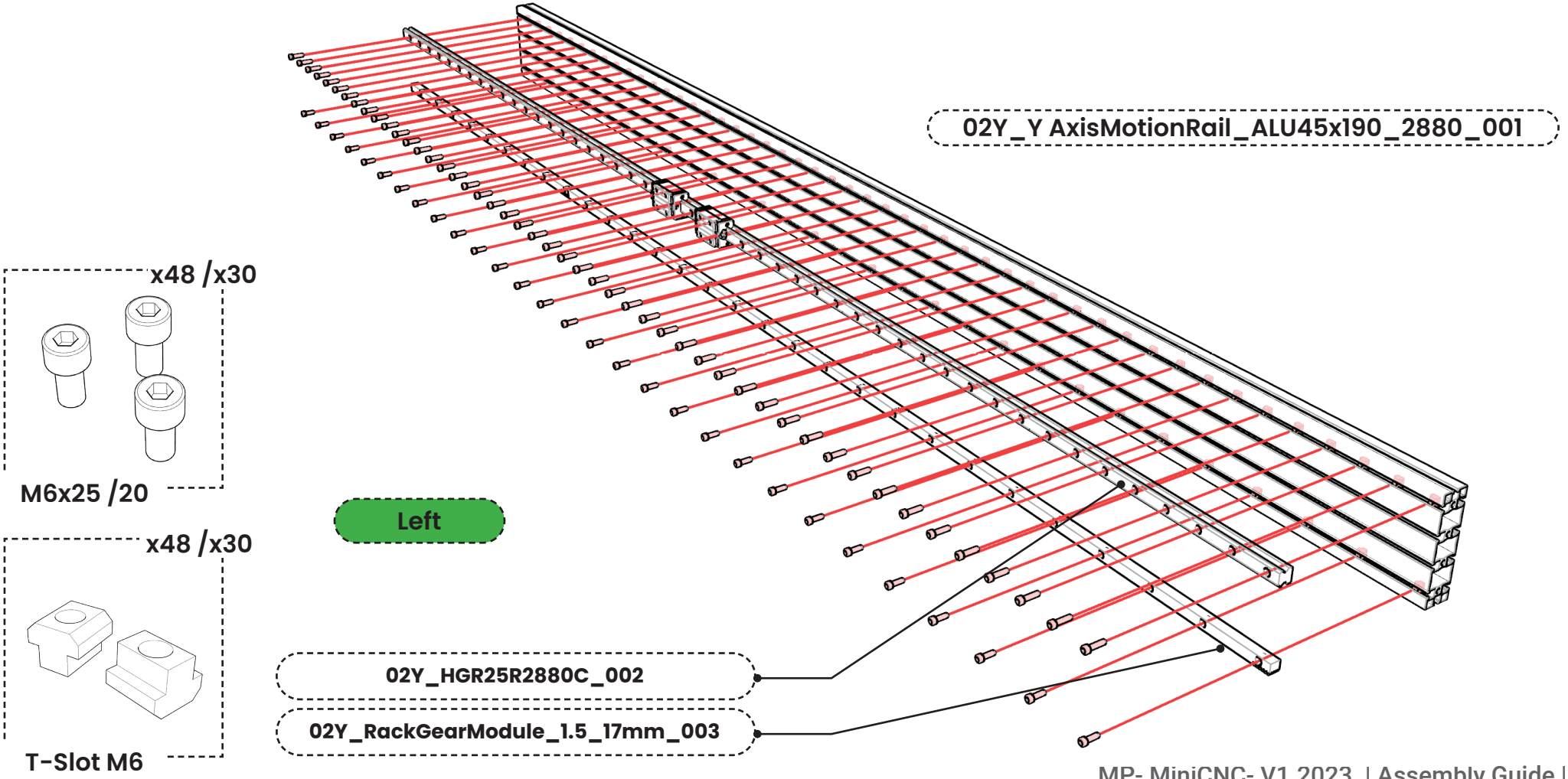

STEP . 08 Assemble the machine Y-Rails (Right)

Insert the **M6x25 /20** through the rails and into the **M6 T-slots**
Carefully Place the Y-guiding rails **HGR25R2880C_002 & RackGearModule** on the Extrusion.
Carefully tighten the fasteners to securely attach the Y-guiding rails to the extrusion

When tightening the fasteners, exercise caution to prevent the **HGR25R2880C_002** from sliding out of rails. Ensure that the fasteners are tightened evenly to maintain proper **alignment and stability**.

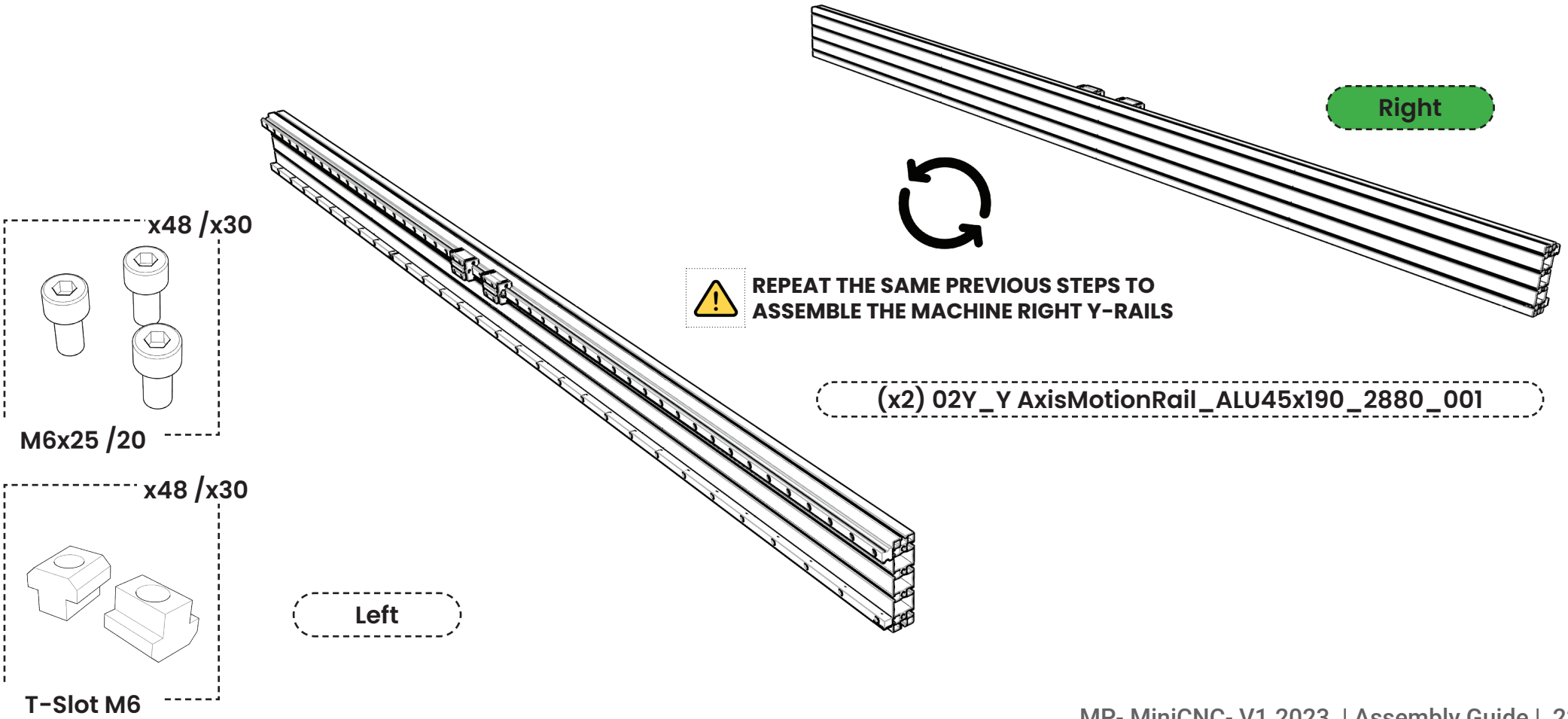

STEP . 09 Assemble the machine Y-Rails (Part2 - Left)

Insert the**M8x14** through **01STR_FooterColumn001** and into the **M8 T-slots**
Carefully Place the **Y-guiding rails Assembly extrusion** on **(x3)FooterColumns**.
Carefully tighten the fasteners to securely attach the Y assembly to the **FooterColumns**.

Make sure that both pieces are properly aligned as shown below.
Take your time to ensure precise alignment, for the overall stability and functionality of the assembly.
Ensure that the fasteners are tightened evenly to maintain proper **alignment and stability**.

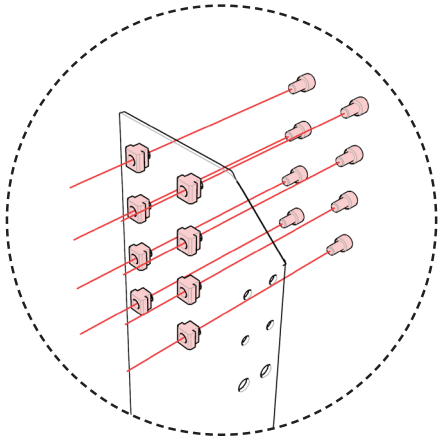

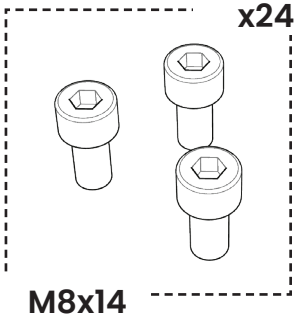

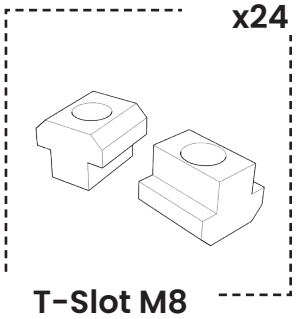

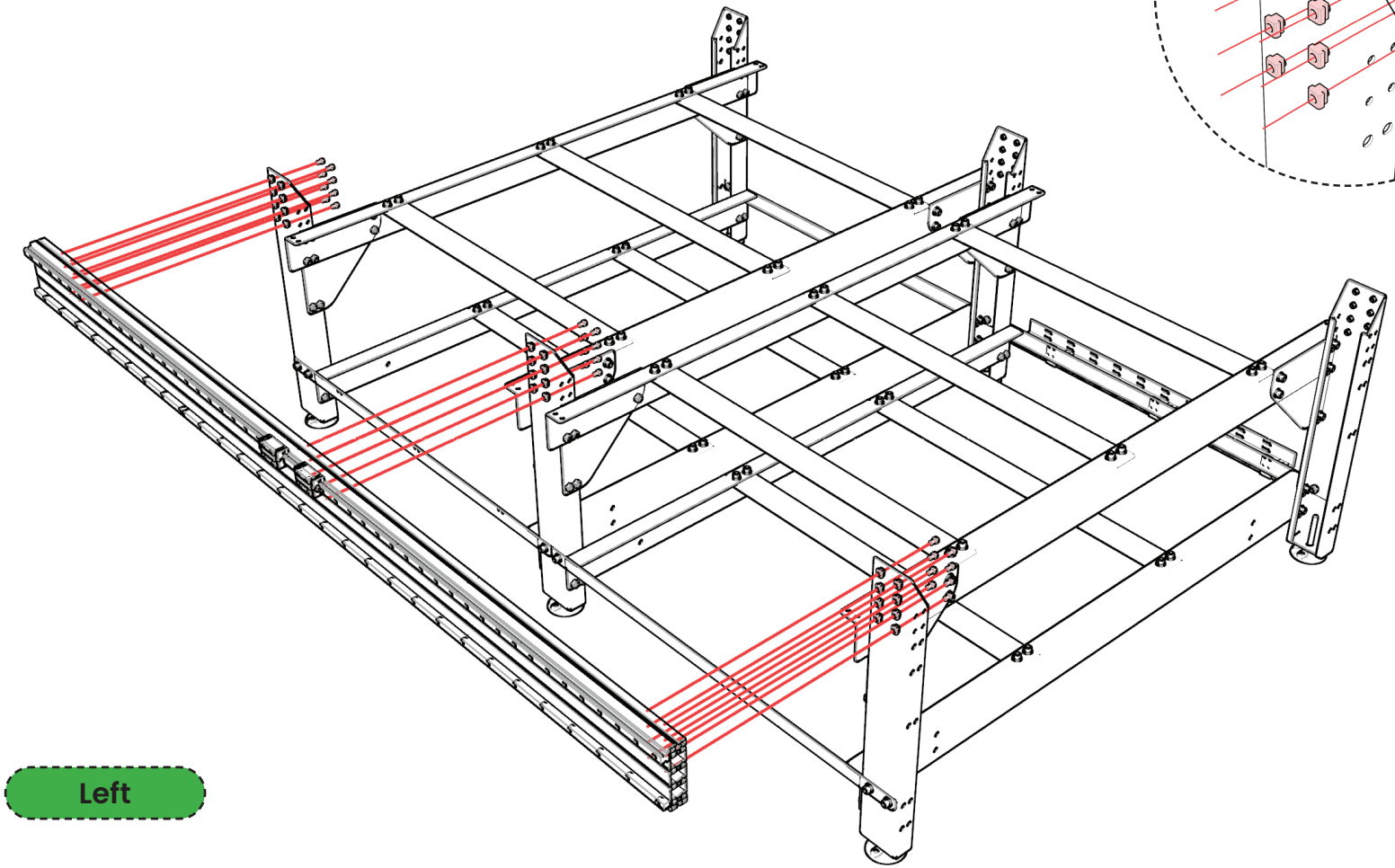

STEP . 10 Assemble the machine Y-Rails (Part2 - Right)

Insert the**M8x14** through **01STR_FooterColumn001** and into the **M8 T-slots**
Carefully Place the **Y-guiding rails Assembly extrusion** on **(x3)FooterColumns**.
Carefully tighten the fasteners to securely attach the Y assembly to the **FooterColumns**.

Make sure that both pieces are properly aligned as shown below.
Take your time to ensure precise alignment, for the overall stability and functionality of the assembly.
Ensure that the fasteners are tightened evenly to maintain proper **alignment and stability**.

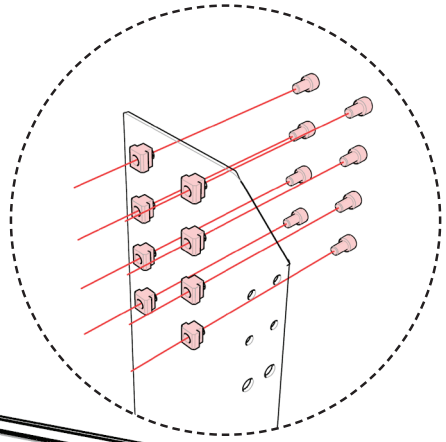

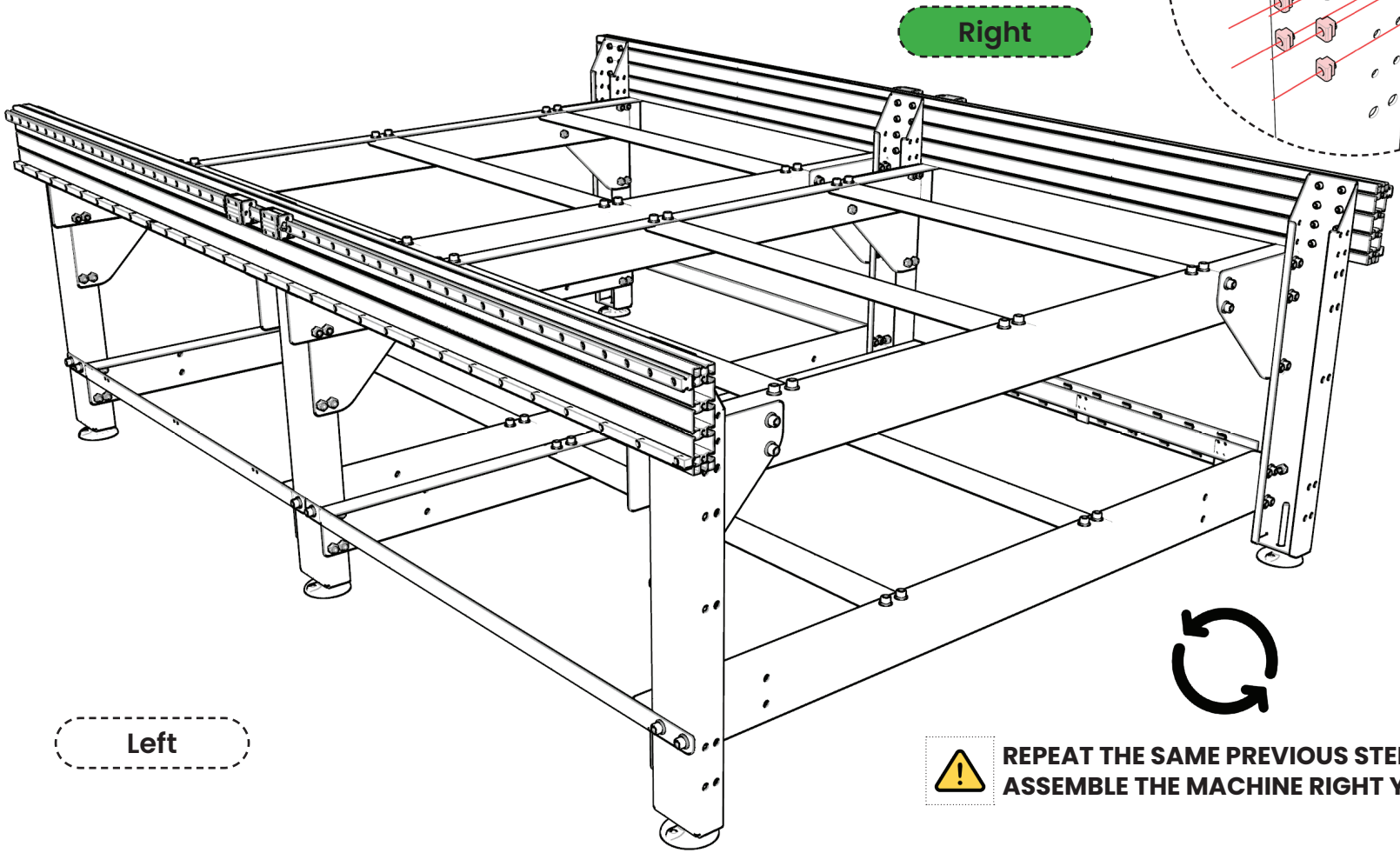

x24

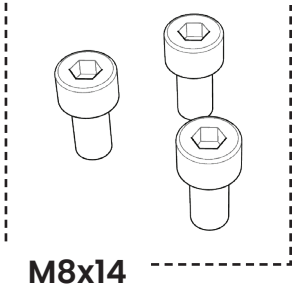

M8x14

x24

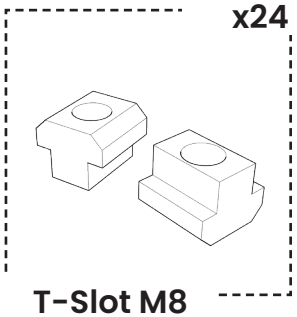

T-Slot M8

REPEAT THE SAME PREVIOUS STEPS TO ASSEMBLE THE MACHINE RIGHT Y-RAILS

STEP . 11 Assemble the machine Y-Carriage (Part1 - Right/Left)

Insert the**M8x24** through **YCarriageGuide Alu Plate** and into the **M8 T-slots**
Carefully Align the **YCarriageGuide Alu Plate** on **YCarrXGantryHolderExtrusion**.
Carefully tighten the fasteners to securely attach the Y carriage assembly.

Make sure that both pieces are properly aligned as shown below.
Take your time to ensure precise alignment, for the overall stability and functionality of the assembly.
Ensure that the fasteners are tightened evenly to maintain proper **alignment and stability**.

Right

REPEAT THE SAME PREVIOUS STEPS TO ASSEMBLE THE MACHINE RIGHT Y-CARRIAGE

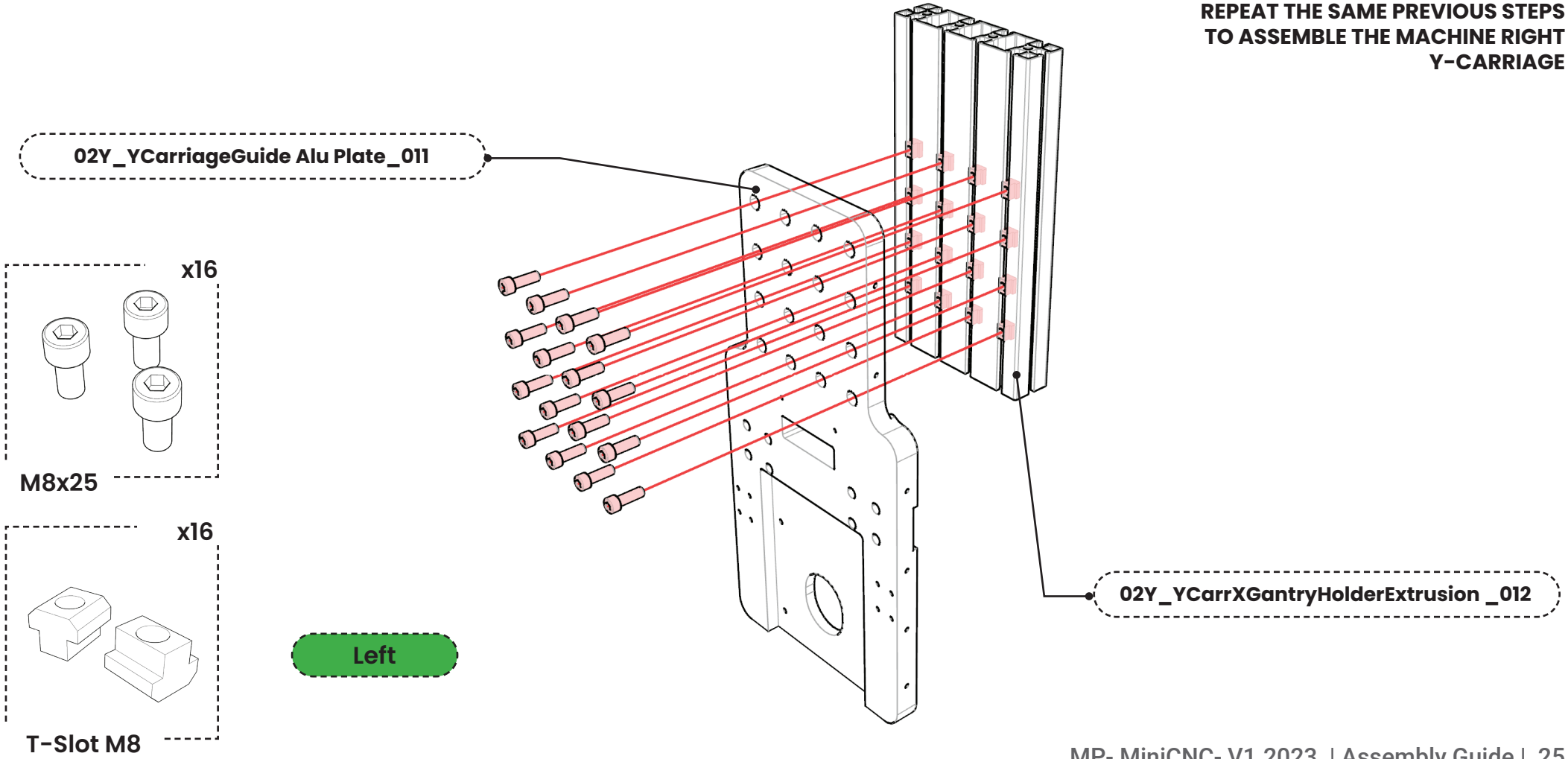

STEP . 12 Assemble the machine Y-Carriage (Part2 - Right/Left)

Use The **M6x25** to securely fasten the **YCarrXGantry Assembly** onto the specified holes of **02Y_HGR25 Hiwin**.
Tighten the set screws & make sure it sits flush.

Be carefull ! Do not slide out the plastic Rail from **02Y_HGR25 Hiwin _013**

Right

REPEAT THE SAME PREVIOUS STEPS TO ASSEMBLE THE MACHINE RIGHT Y-CARRIAGE

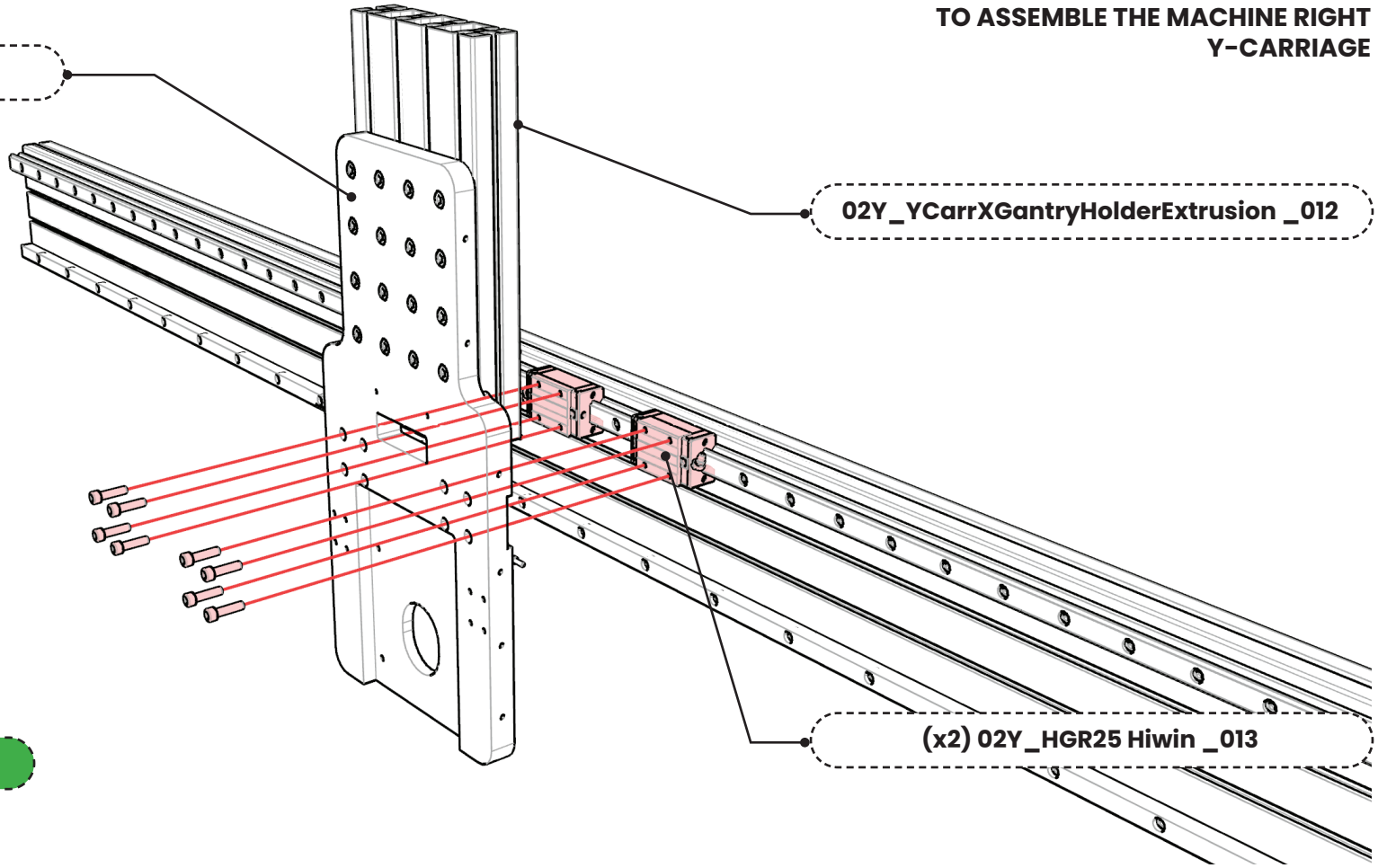

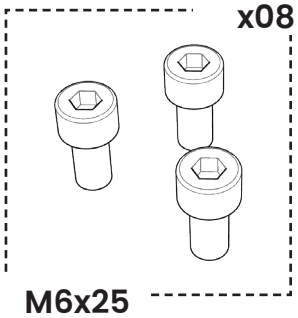

Left

STEP . 13 Assemble the machine Y-Carriage (Part3 - Right/Left)

Use The **M6x18** to securely fasten the **Gearbox_ helical 1.25** onto the specified holes of **YCarrXGantryHolderExtrusion** .
Tighten the set screws & make sure it sits flush.

Make sure that both pieces are properly aligned as shown below.
Take your time to ensure precise alignment, as this is crucial for the overall stability and functionality of the assembly.
Adjut The **Gearbox_ helical** to make it flush with **RackGearModule** .

Right

REPEAT THE SAME PREVIOUS STEPS TO ASSEMBLE THE MACHINE RIGHT Y-CARRIAGE

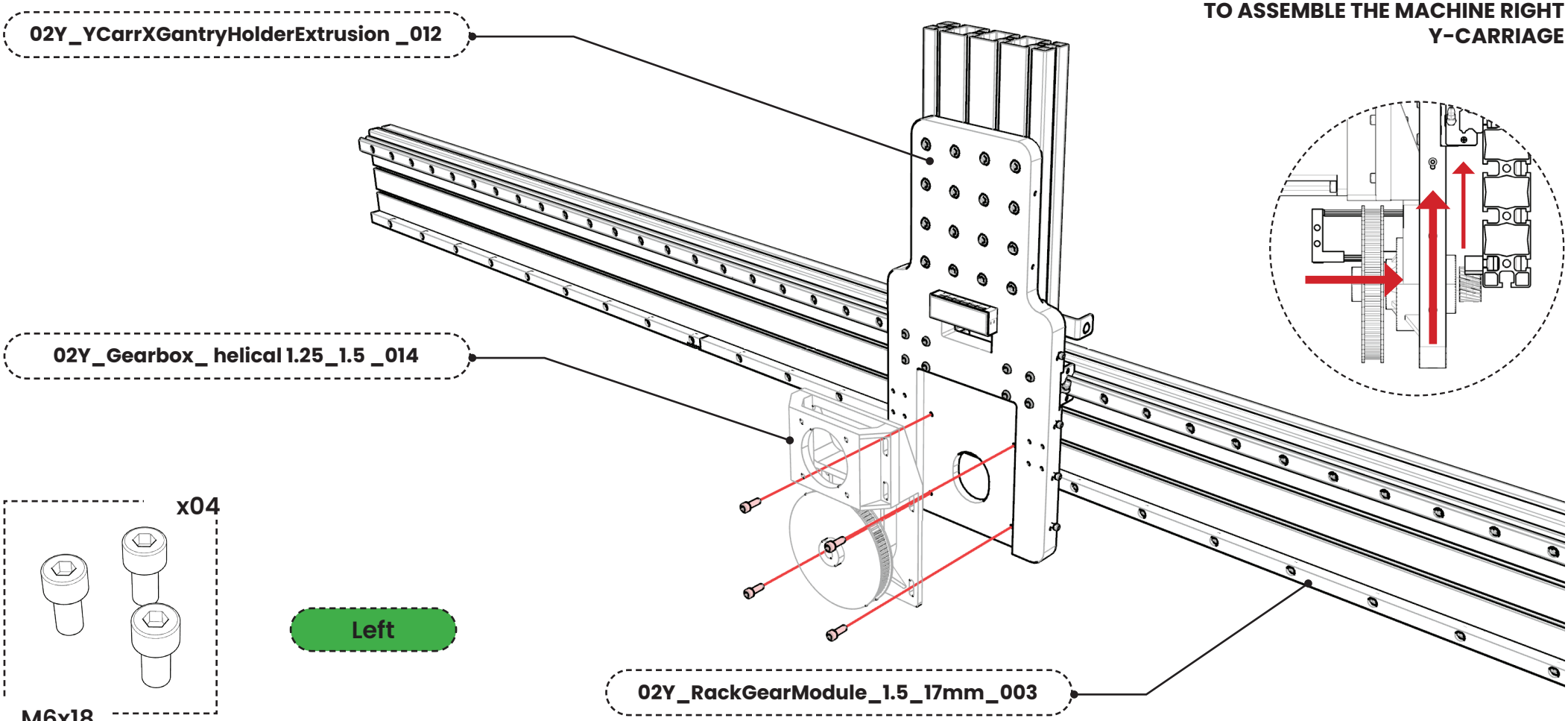

Left

STEP . 14 Assemble the machine Y-Carriage (Part4 - Right/Left)

Use The **M6x30** to securely fasten the **NEMA-34 - motor** onto the specified holes of **02Y_Gearbox_ helical 1.25_1.5 _014** .
Tighten the set screws & make sure it sits flush.

Make sure that both pieces are properly aligned as shown below.
Take your time to ensure precise alignment, as this is crucial for the overall stability and functionality of the assembly.
Slide The motor to tense the belt.

Right

REPEAT THE SAME PREVIOUS STEPS TO ASSEMBLE THE MACHINE RIGHT Y-CARRIAGE

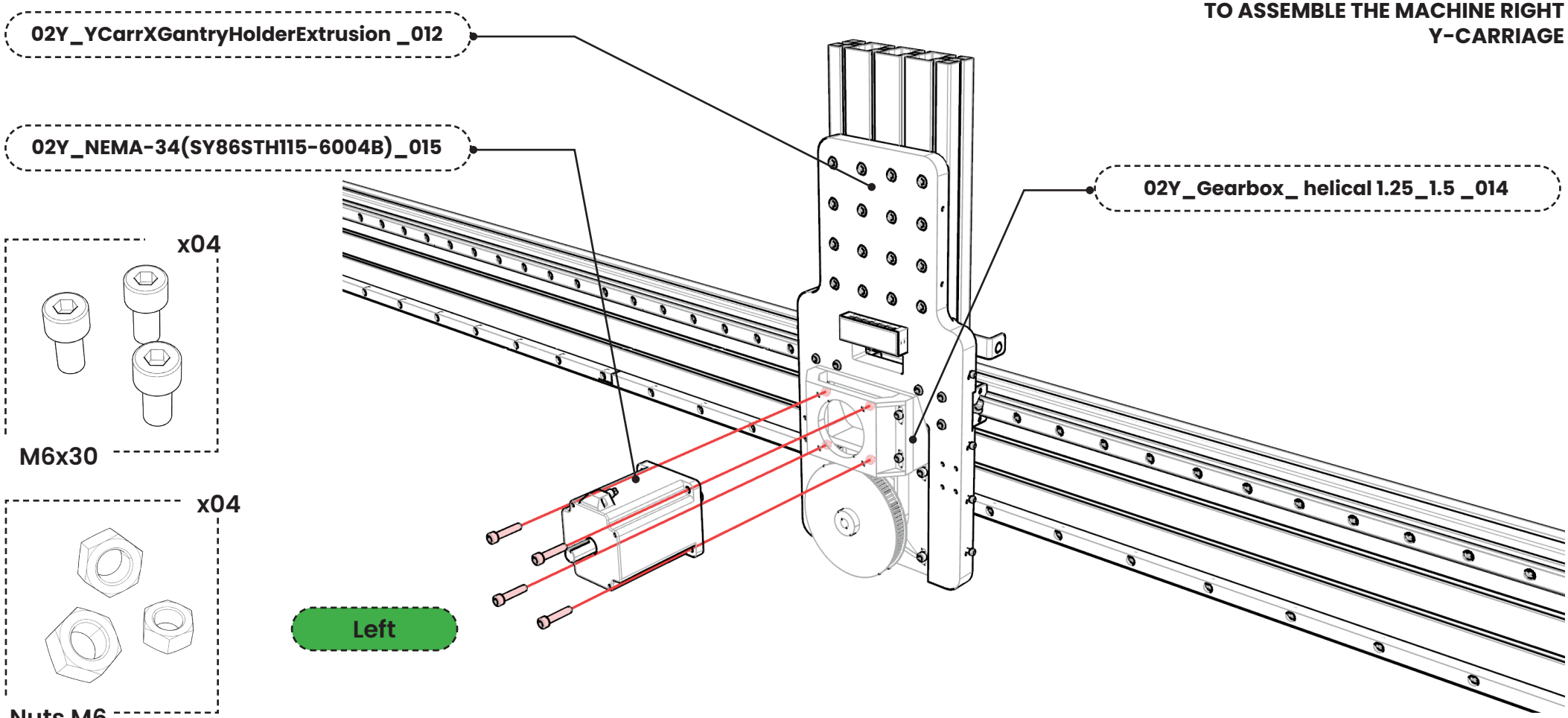

STEP . 15 Assemble the machine Y-Carriage (4x4 Parts - Right)

REPEAT THE SAME PREVIOUS STEPS TO ASSEMBLE THE MACHINE RIGHT Y-CARRIAGE

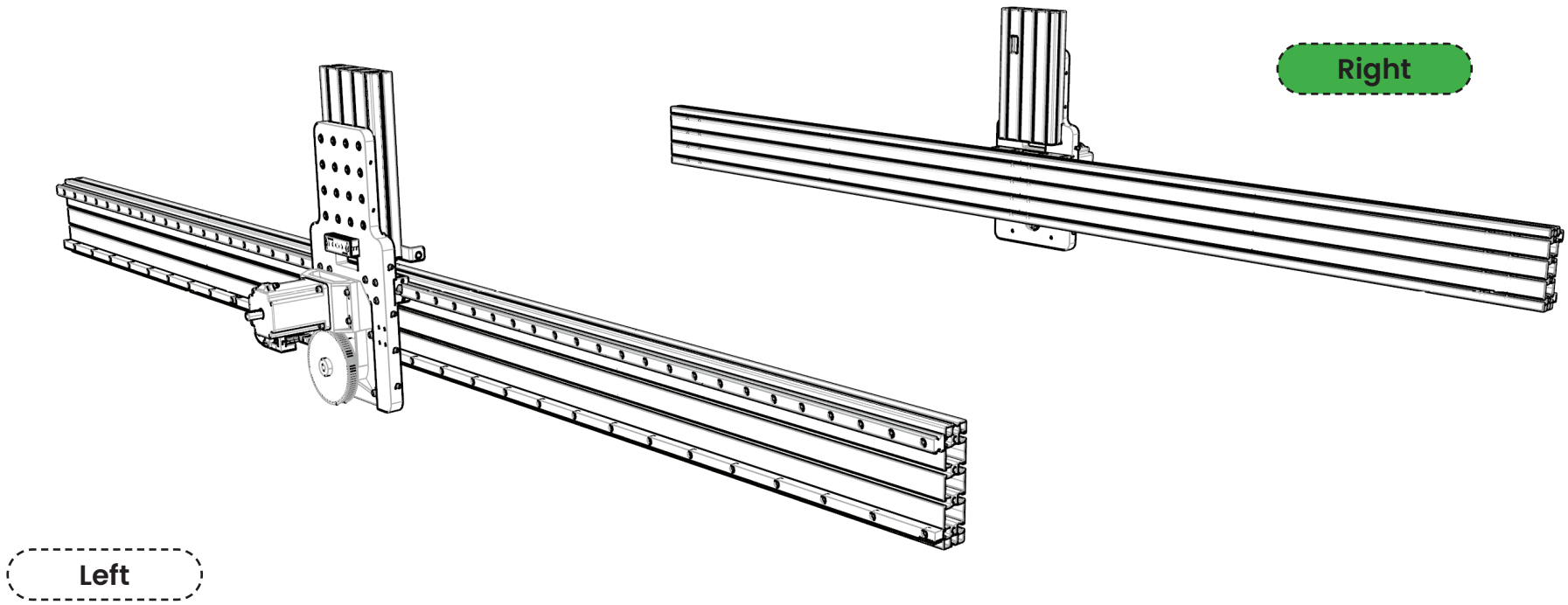

STEP . 16 Assemble the machine Framing

Use The **M8x16** to securely fasten the **Barckets (L & T)** onto the **FramingALU** & **Y-railings**.
Start with extremities to assure a proper alignment.
Tighten the set screws & make sure it sits flush.

Make sure that both pieces are properly aligned as shown below.
Take your time to ensure precise alignment, as this is crucial for the overall stability and functionality of the assembly.

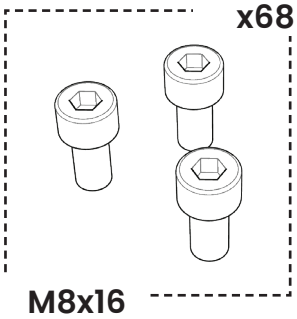

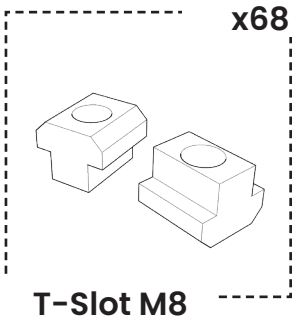

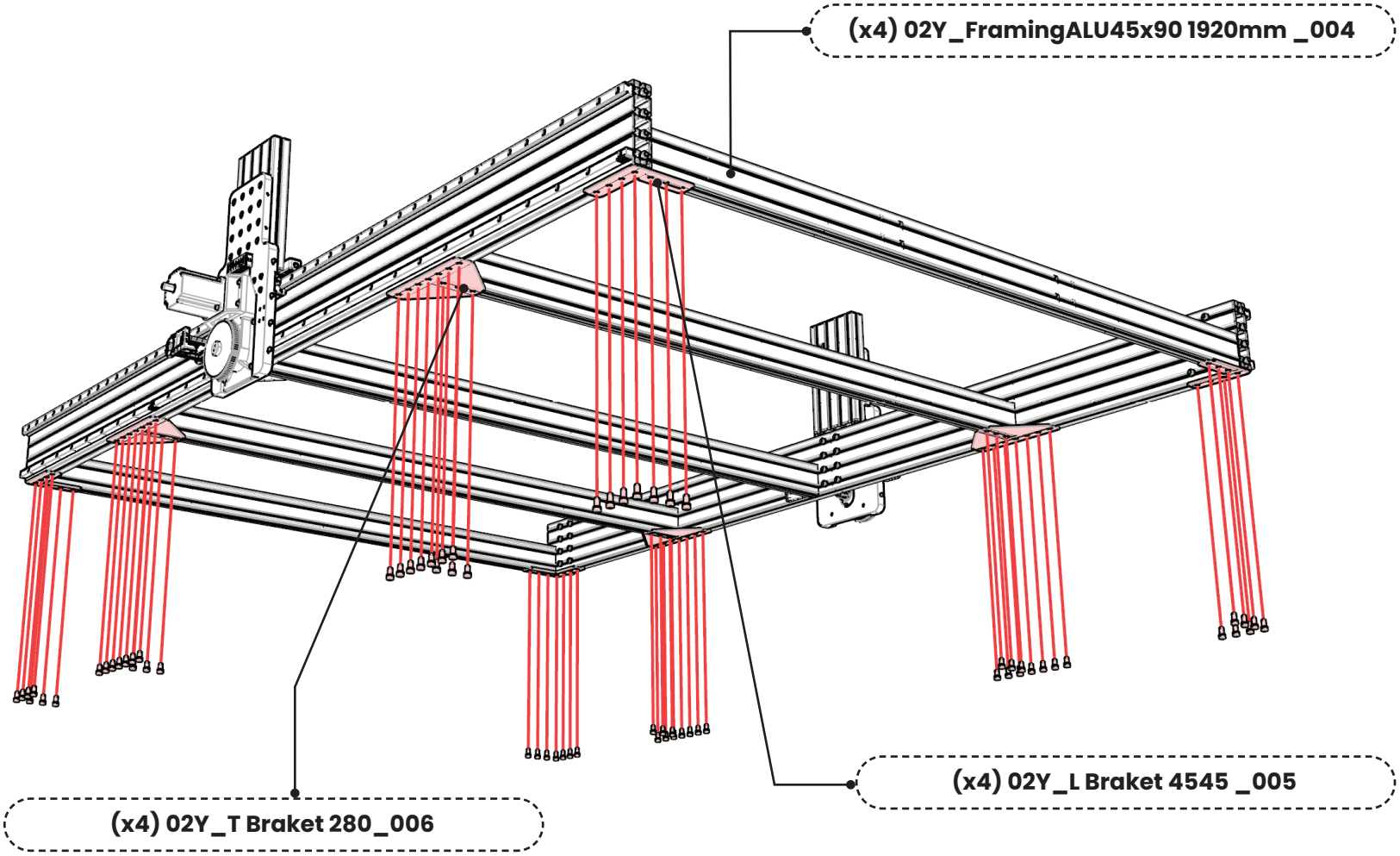

STEP . 17 Assemble the machine Framing

Use The **M6x25** to securely fasten the **HGR25R2000C _002** onto the front side **X AxisMotionRail_90x180_2000mm**.
Use The **M6x20** to securely fasten the **RackGearModule** onto the top side **X AxisMotionRail_90x180_2000mm**.
Tighten the set screws & make sure it sits flush.

Make sure that both pieces are properly aligned as shown below.
When tightening the fasteners, exercise caution to prevent the HGR25R2000C from sliding out of rails.

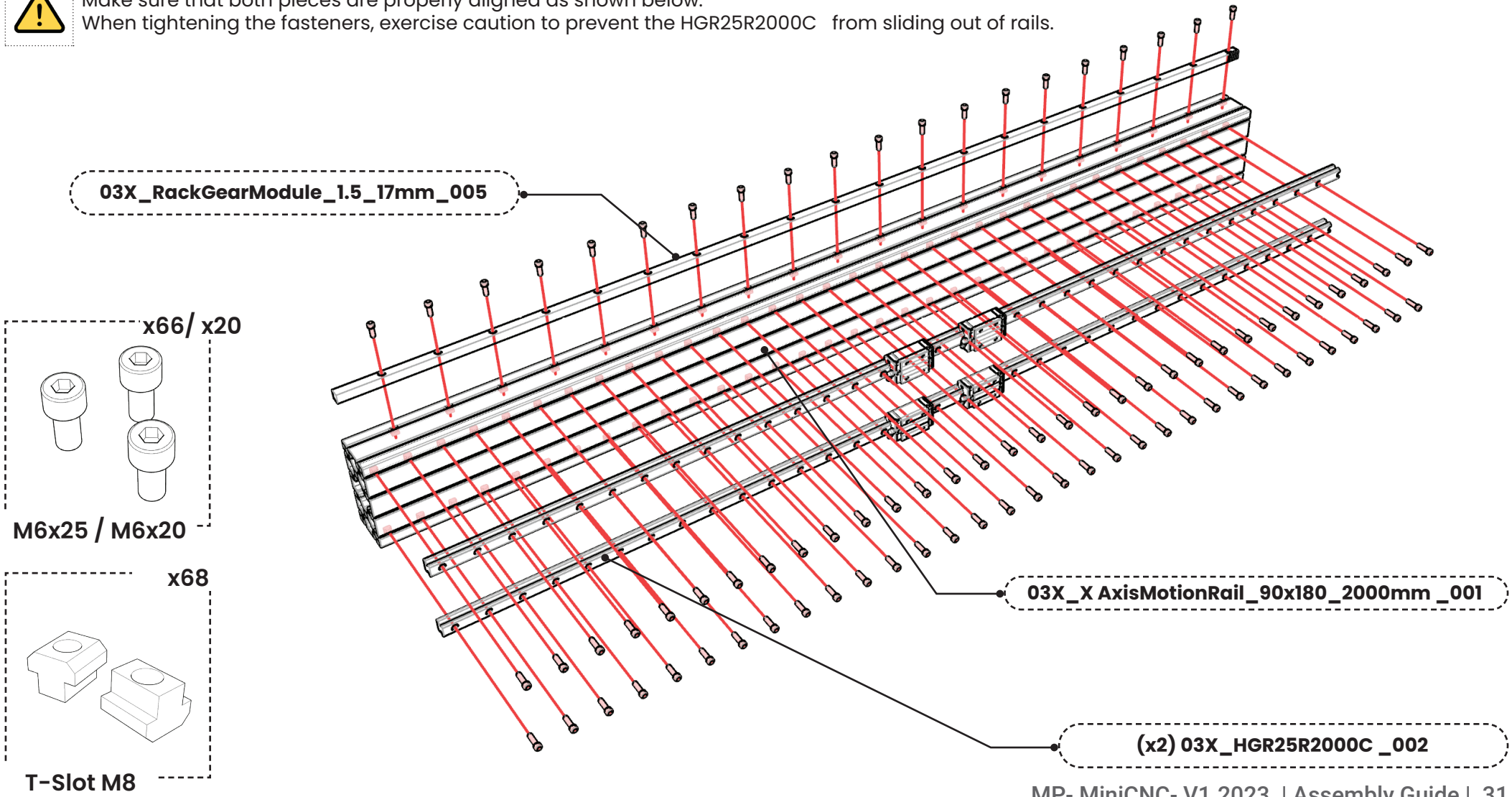

STEP . 18 Assemble the X - SquareAluBracket (Right/Left)

Use The **M4x20** to securely fasten the **SquareAluBracket** onto the front side **YCarrXGantryHolderExtrusion**. Tighten the set screws & make sure it sits flush.

Make sure that both pieces are properly aligned as shown below.

Right

REPEAT THE SAME PREVIOUS STEPS TO ASSEMBLE THE MACHINE RIGHT X-CARRIAGE

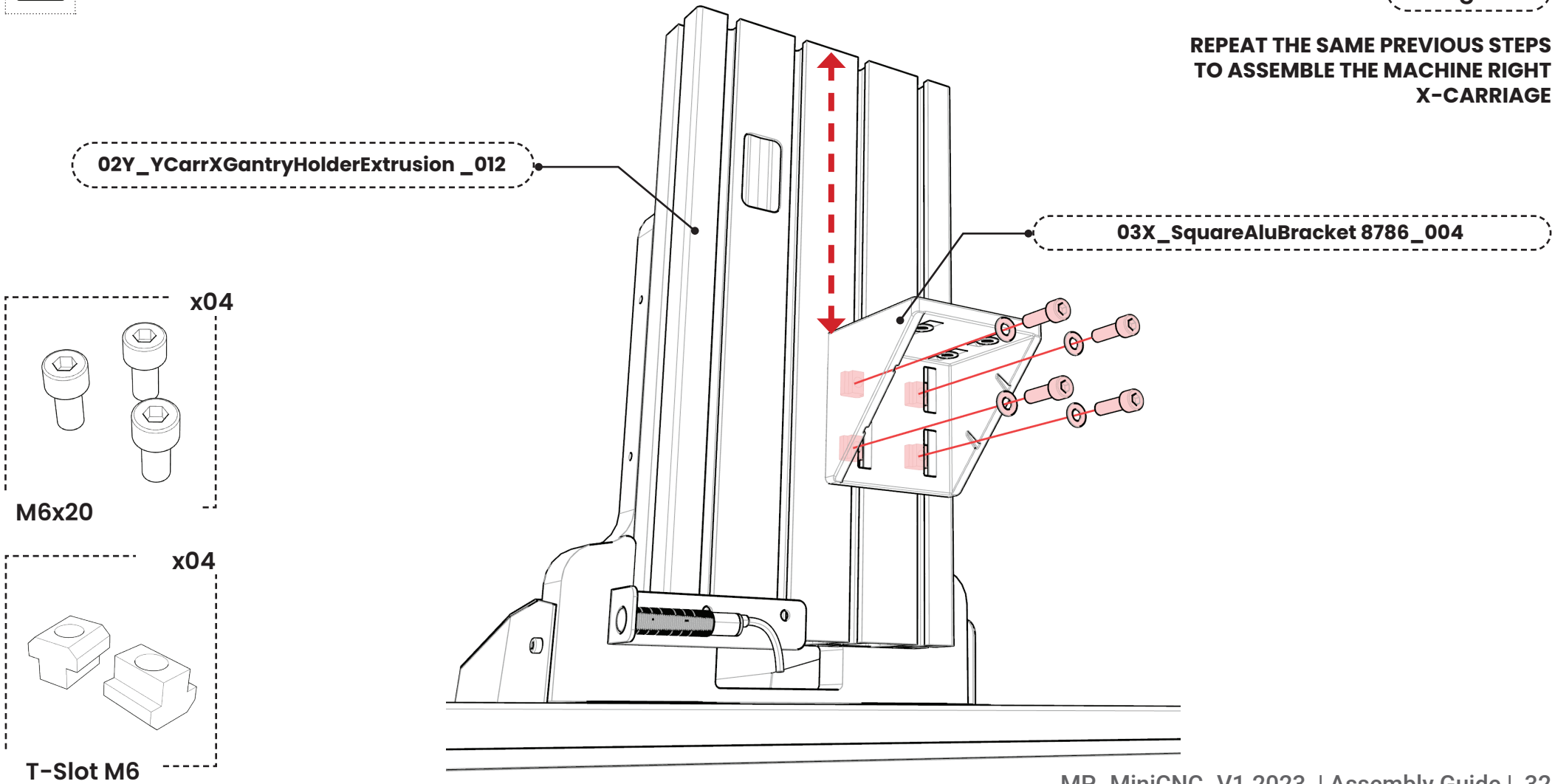

STEP . 19 Assemble the X - SquareAluBracket (Right/Left)

Use The **M4x20** to securely fasten the **X AxisMotionRail** onto the front side **03X_SquareAluBracket 8786_004**.
Tighten the set screws & make sure it sits flush.

Make sure that both pieces are properly aligned as shown below.

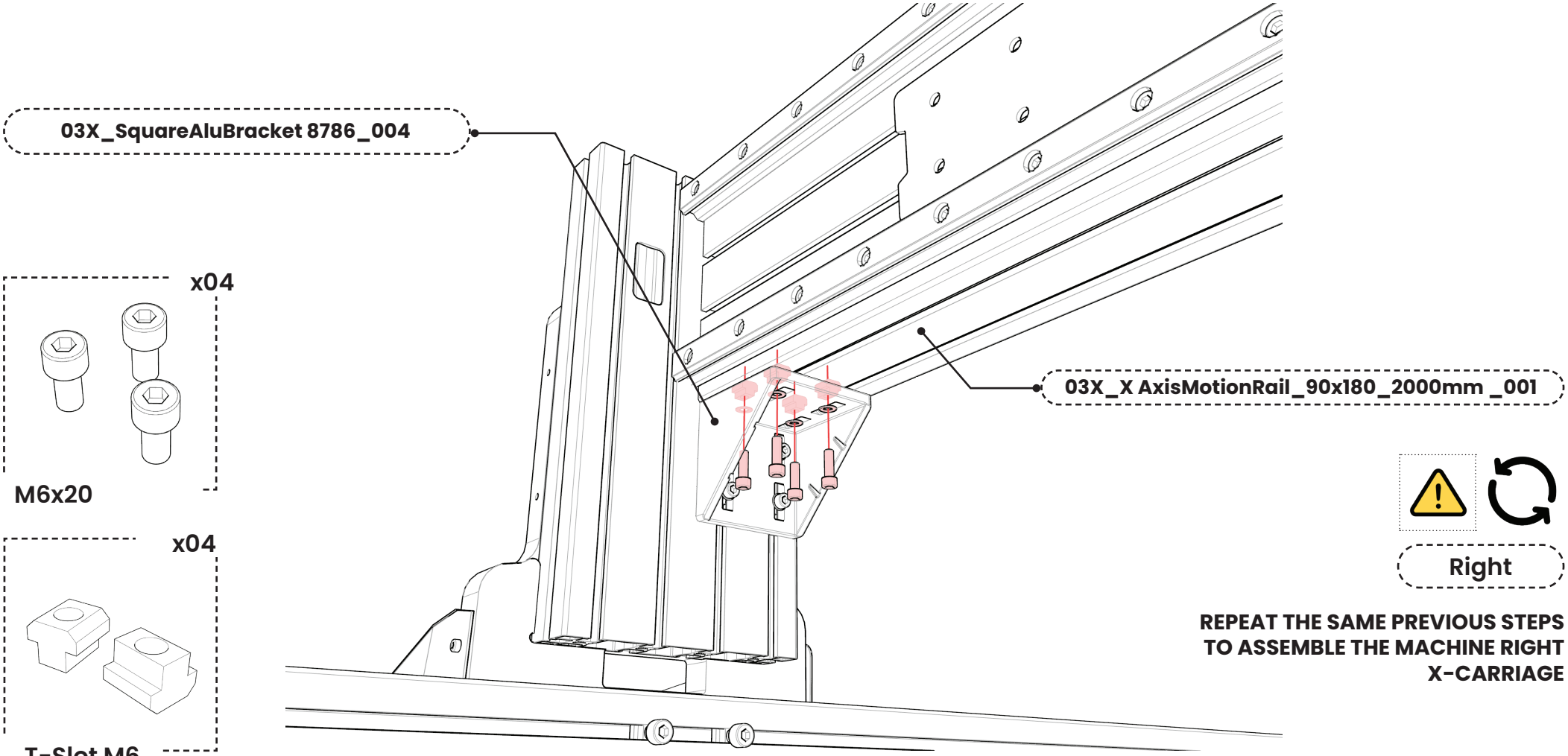

REPEAT THE SAME PREVIOUS STEPS TO ASSEMBLE THE MACHINE RIGHT X-CARRIAGE

STEP . 20 Assemble the X CarriageGuide (Part1)

Use The **M6x30** to securely fasten the **Gearbox HolderAluPlate** onto the **03X_XCarriageGuide Alu Plate_008**
Tighten the set screws & make sure it sits flush.

Make sure that both pieces are properly aligned as shown below.

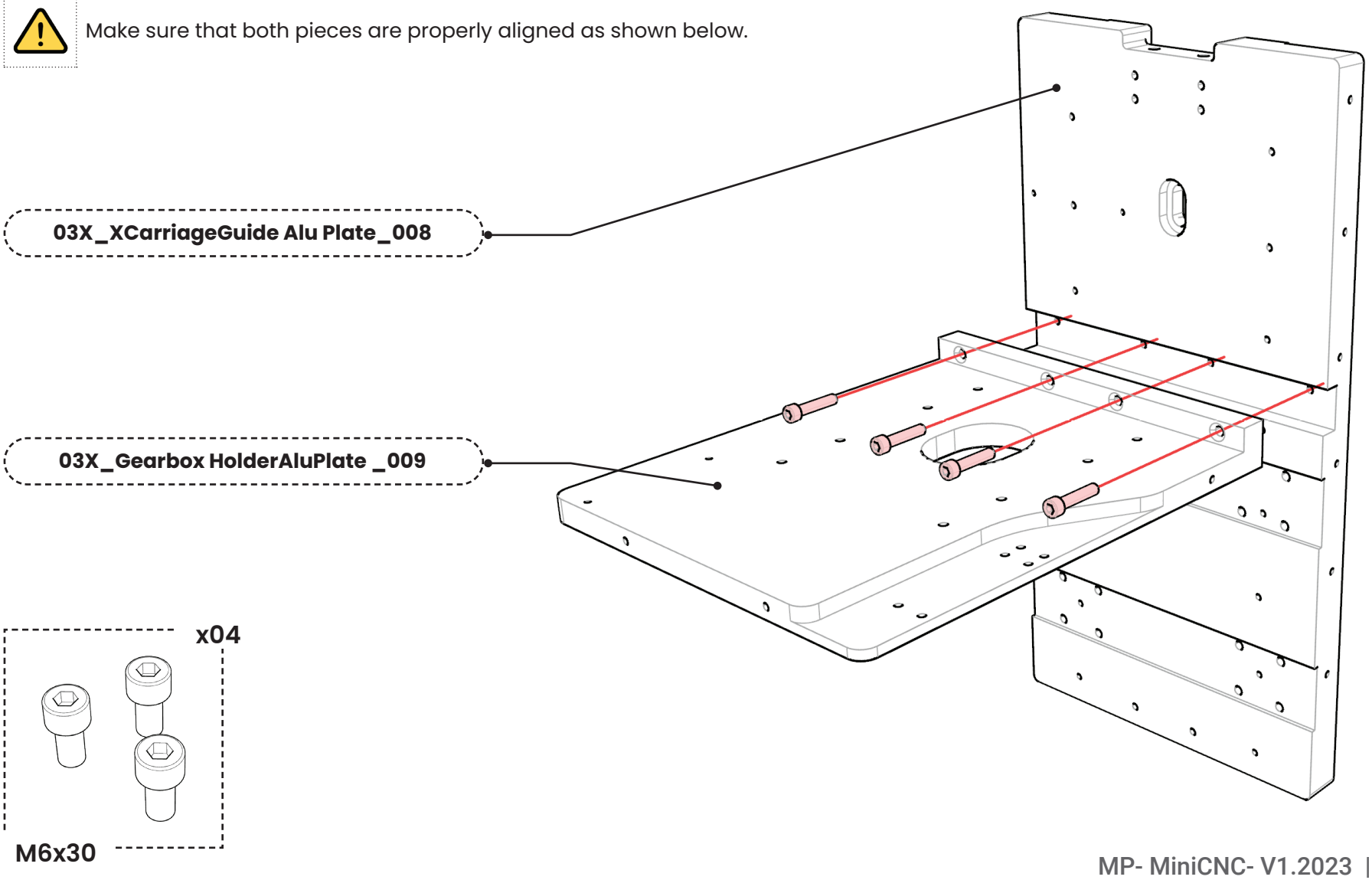

STEP . 21 Assemble the X CarriageGuide (Part 2)

Use The **M6x25** to securely fasten the **XCarriageGuide** onto the specified holesof **03X_HGR25 Hiwin _003**
Tighten the set screws & make sure it sits flush.

Make sure that both pieces are properly aligned as shown below.
Take your time to ensure precise alignment, as this is crucial for the overall stability and functionality of the assembly.

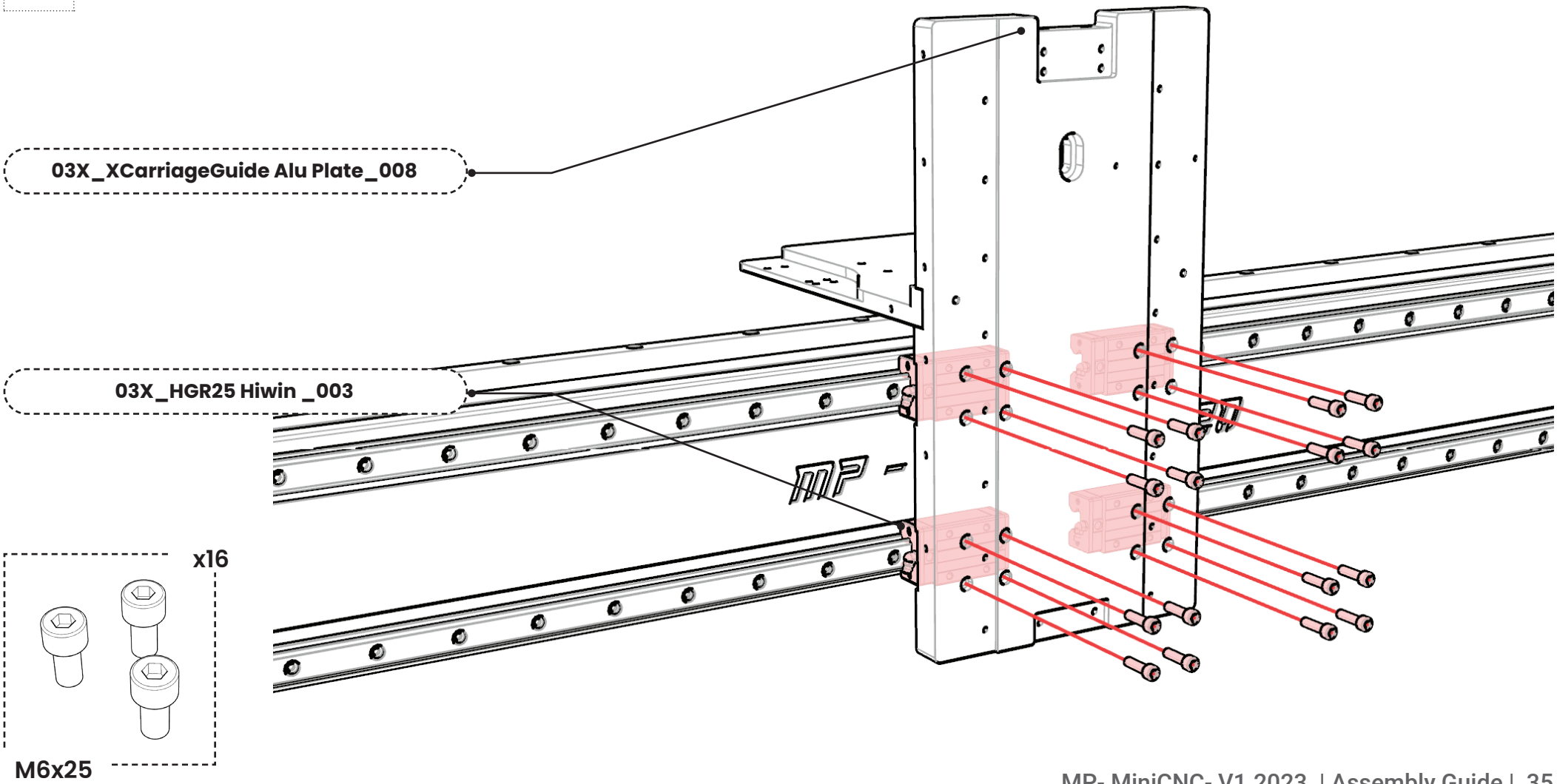

STEP . 22 Assemble the X Carriage GearBox (Part 1)

Use The **M6x25** to securely fasten the **Gearbox_ helical 1.25** onto the specified holes of **Gearbox HolderAluPlate** .
Tighten the set screws & make sure it sits flush.

Make sure that both pieces are properly aligned as shown below.
Take your time to ensure precise alignment, as this is crucial for the overall stability and functionality of the assembly.
Adjut The **Gearbox_ helical** to make it flush with **RackGearModule** .

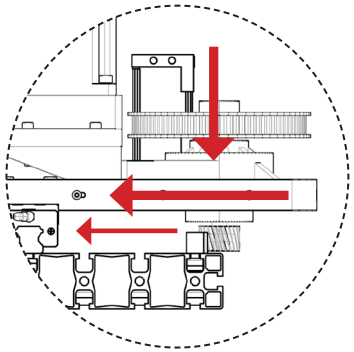

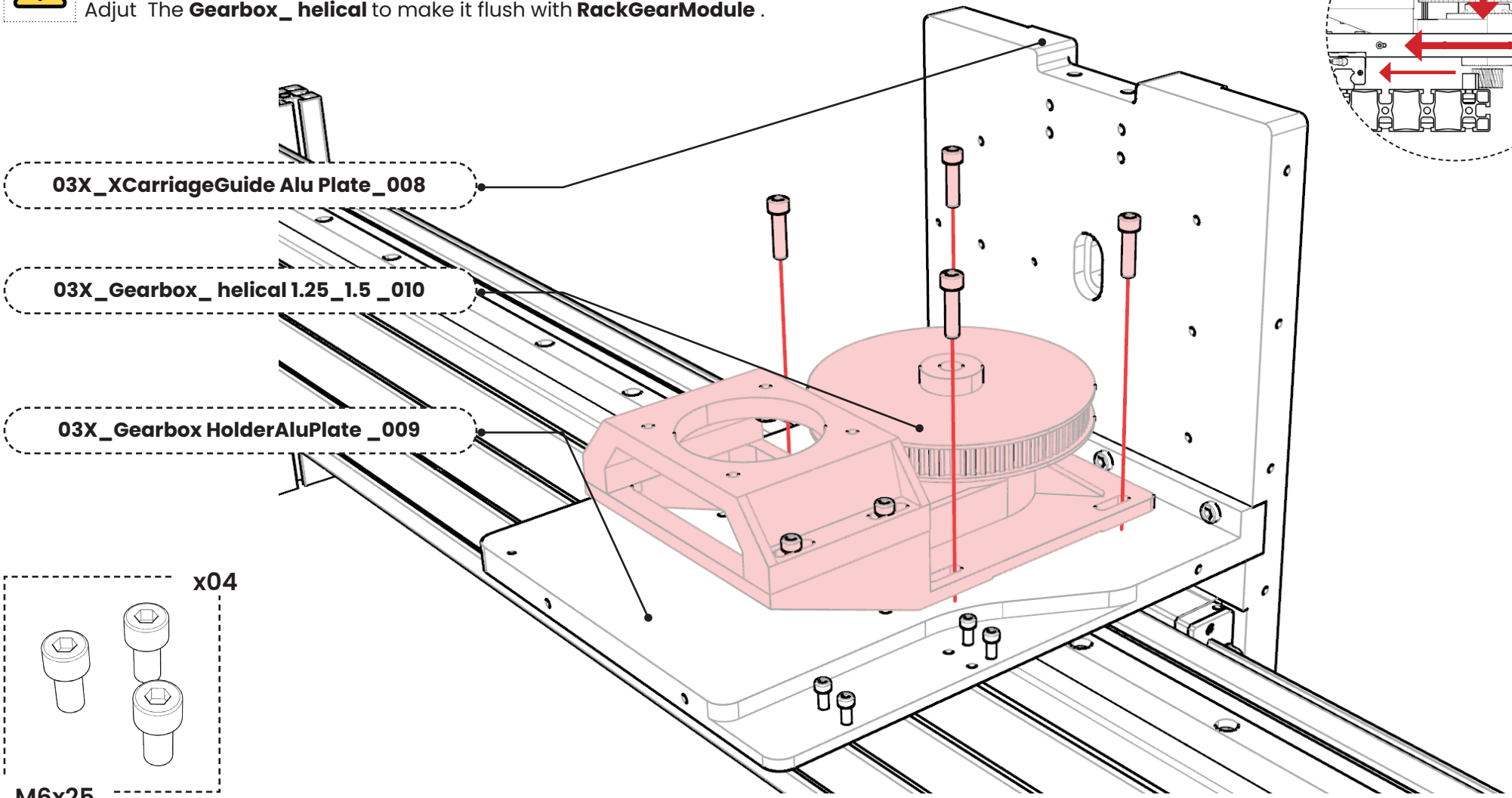

STEP . 23 Assemble the X Carriage GearBox (Part 2)

Use The **M5x30** to securely fasten the **NEMA-34 - motor** onto the specified holes of **03X_Gearbox_ helical 1.25_1.5 _010** .
Tighten the set screws & make sure it sits flush.

Make sure that both pieces are properly aligned as shown below.
Take your time to ensure precise alignment, as this is crucial for the overall stability and functionality of the assembly.
Slide The motor to tense the belt.

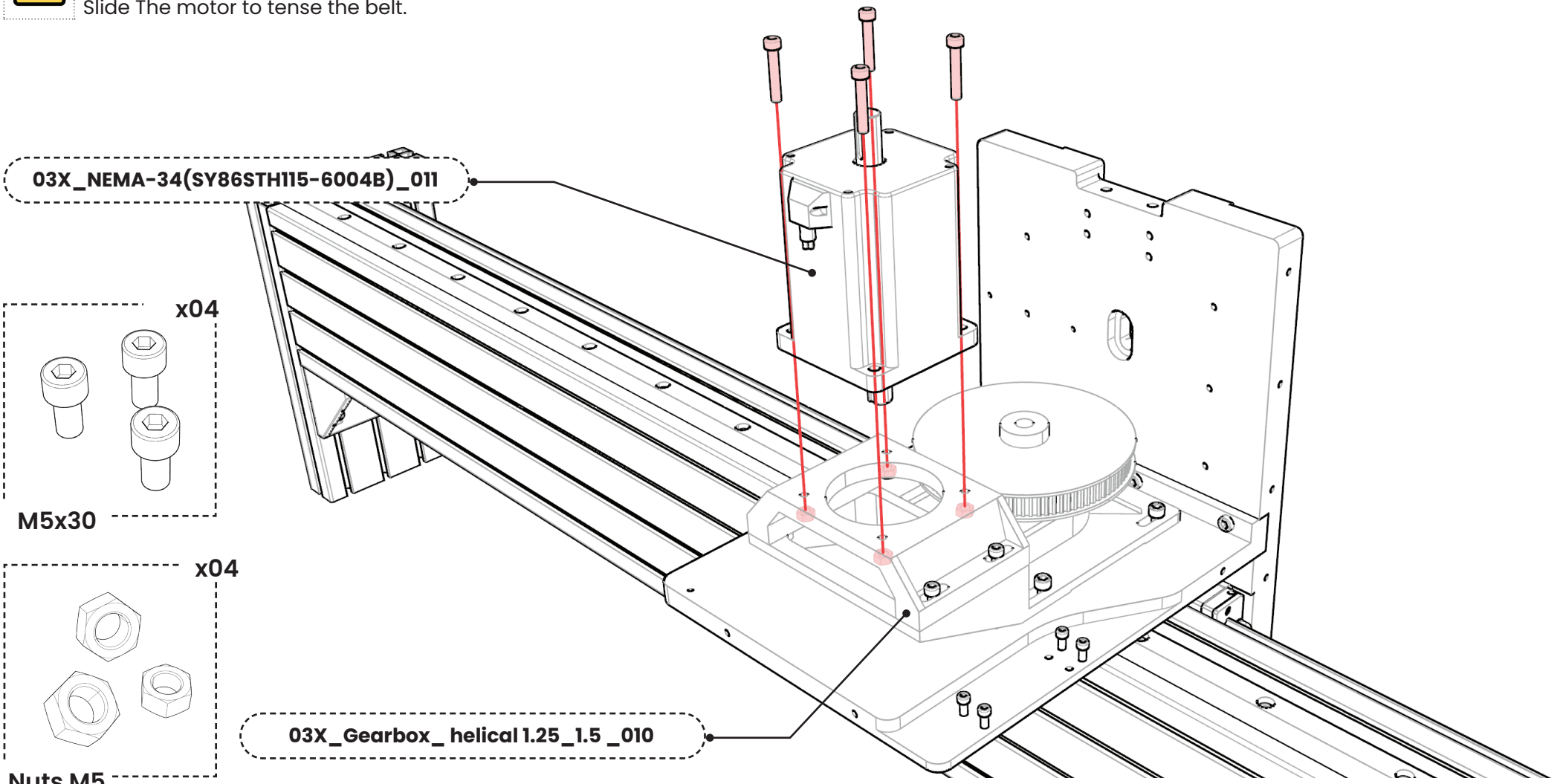

STEP . 24 Assemble the Z-Carriage Rail

Use The **M5x30** to securely fasten the **04Z_HGR20R500C_005** onto the specified holes of **03X_Gearbox HolderAluPlate _009**.
Tighten the set screws & make sure it sits flush.

When tightening the fasteners, exercise caution to prevent the **HGR25R2880C_002** from sliding out of rails.
Ensure that the fasteners are tightened evenly to maintain proper **alignment and stability**.

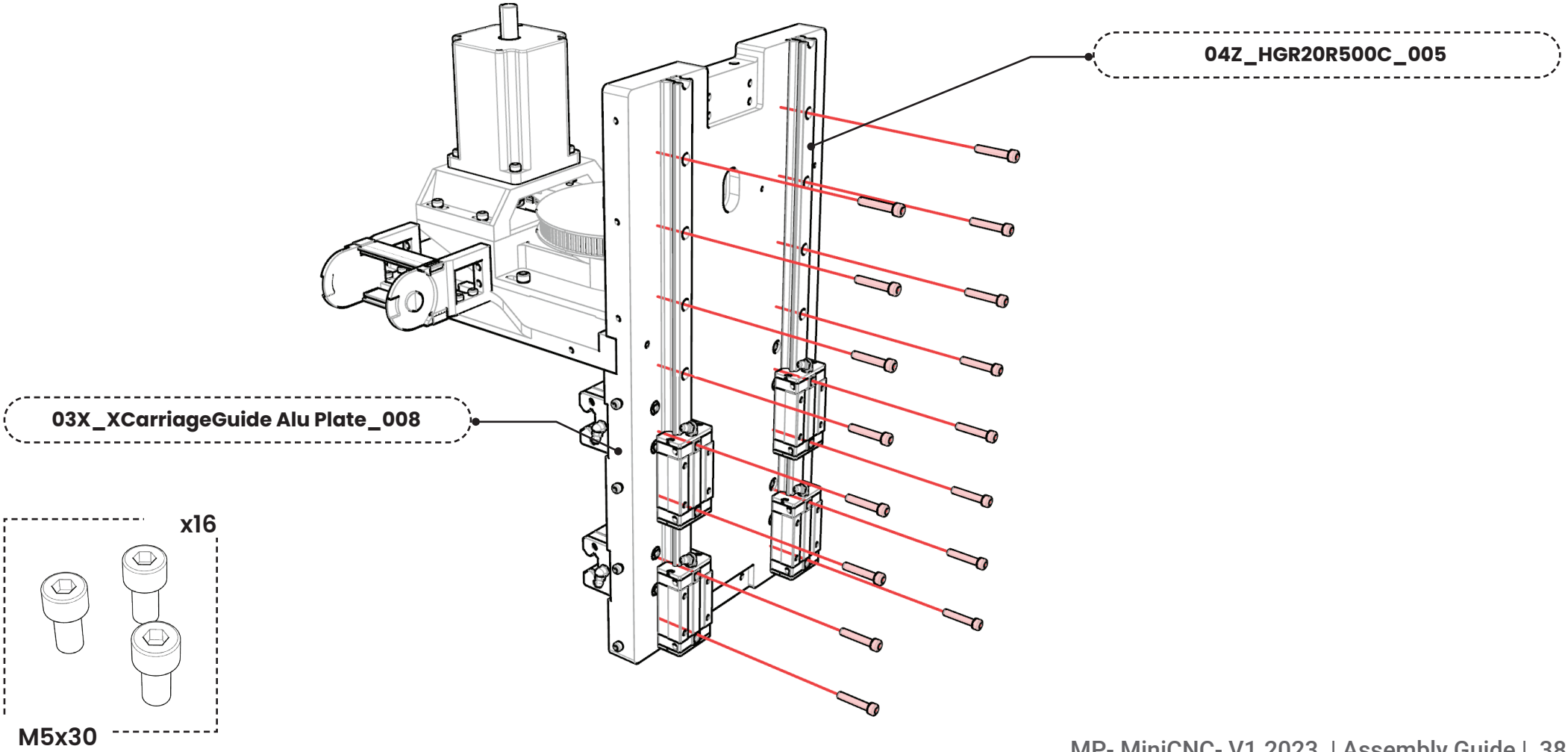

STEP . 25 Assemble the Z-Ball screws

Use The **M5x30** to securely fasten the **04Z_HGR20R500C_005** onto the specified holes of **03X_Gearbox HolderAluPlate _009**.
Tighten the set screws & make sure it sits flush.

When tightening the fasteners, exercise caution to prevent the **HGR20R500C_005** from sliding out of rails.
Ensure that the fasteners are tightened evenly to maintain proper **alignment and stability**.

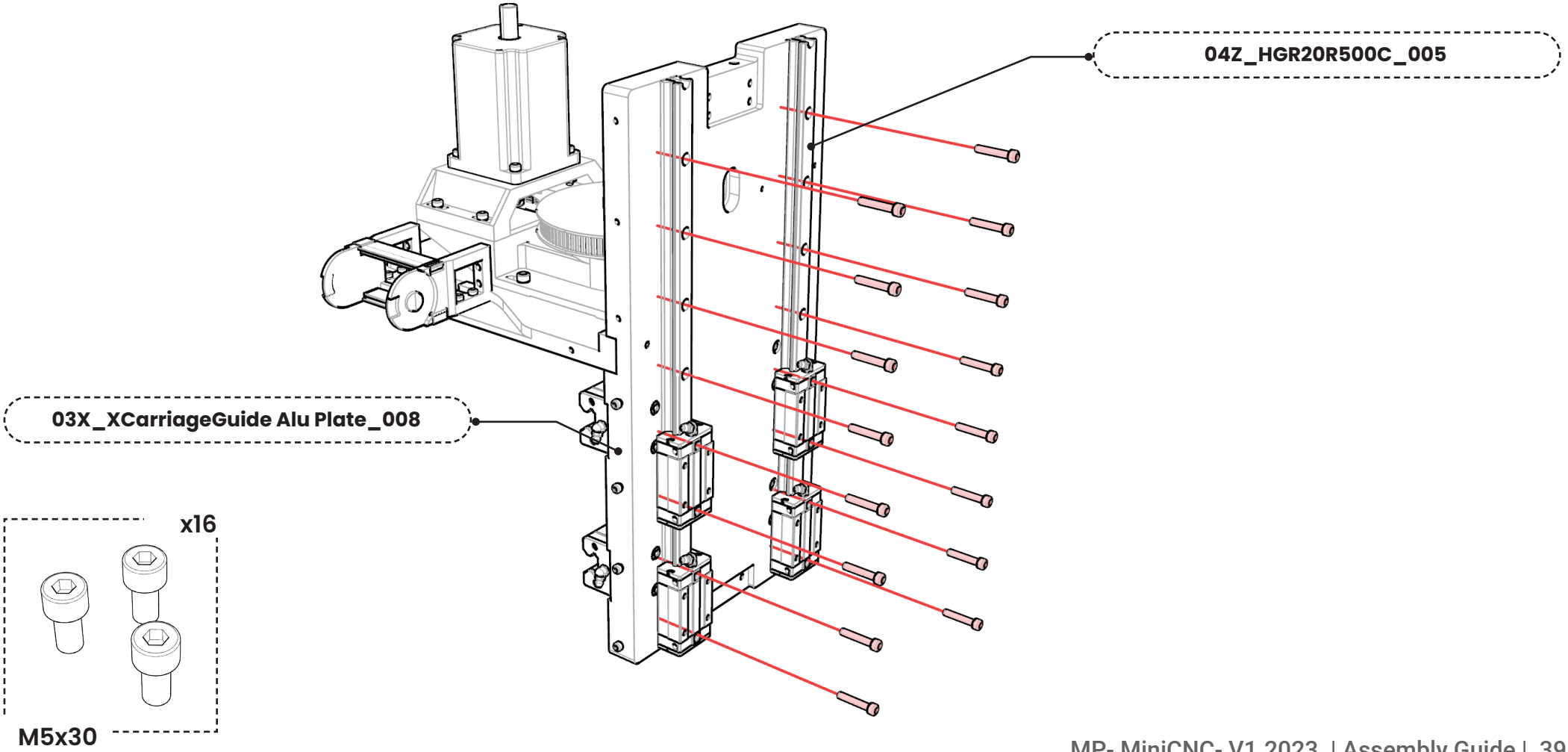

STEP . 26 Assemble the Z-Ball screw2005

Use The **M6x50** to securely fasten the **2- Ballscrew SFU2005** onto the holes of **XCarriageGuide Alu Plate.**
Tighten the set screws & make sure it sits flush.

Be carefull when using a hammer during assembly. Avoid excessive force, which may lead to damage or misalignment of components.
Ensure that the fasteners are tightened evenly to maintain proper **alignment and stability**.

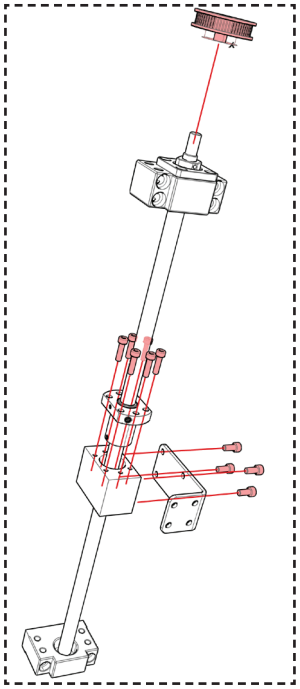

x06

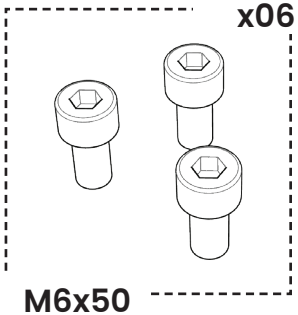

M6x50

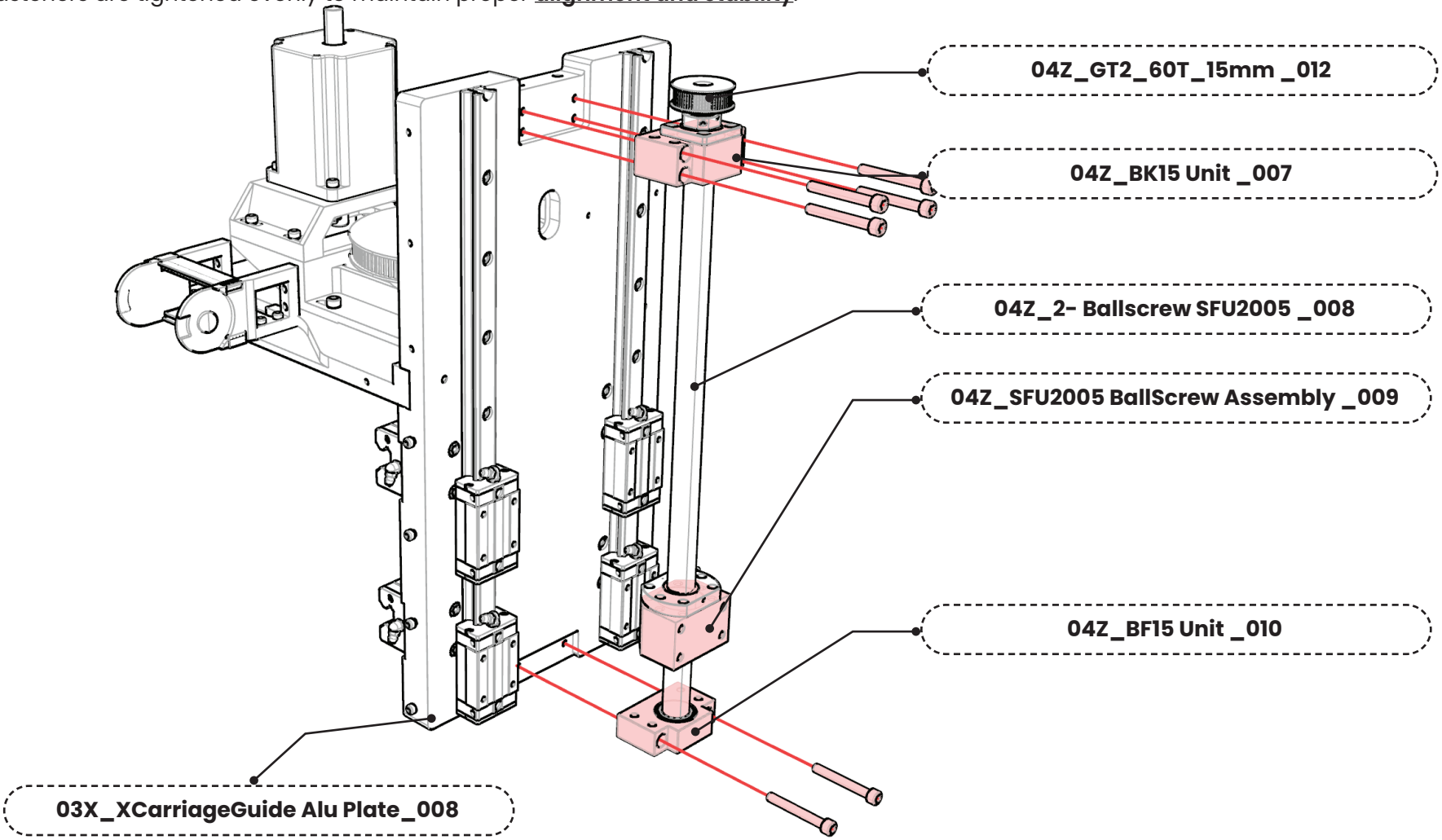

STEP . 27 Assemble the Z carrige plate (Part 1)

Use The **M5x30** to securely fasten the **Z carrige plate** onto the holes of **HGH20HIWIN.**
Tighten the set screws & make sure it sits flush.

When tightening the fasteners, exercise caution to prevent the **HGH20HIWIN** from sliding out of rails.
Ensure that the fasteners are tightened evenly to maintain proper **alignment and stability**.

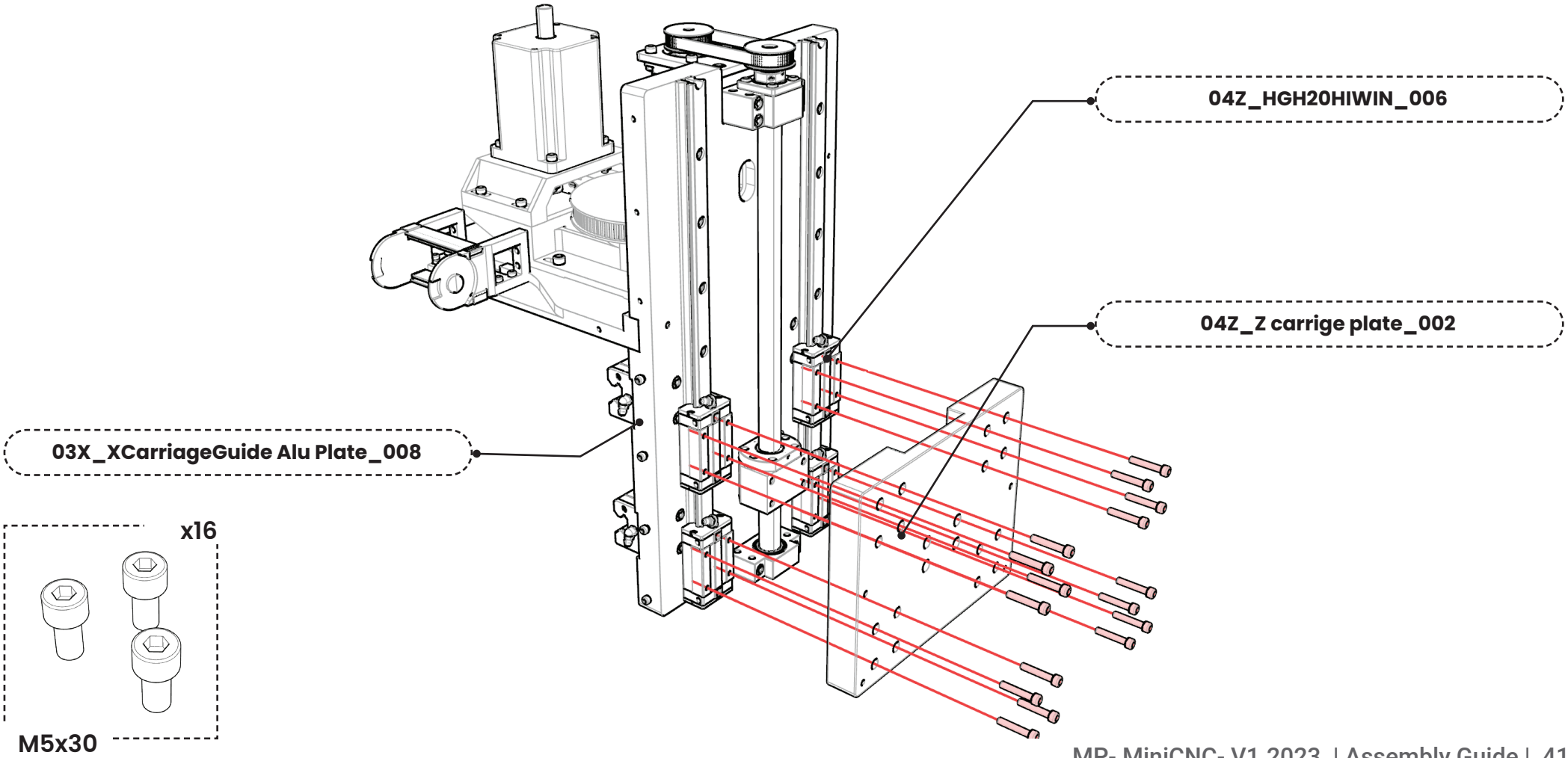

STEP . 28 Assemble the Z carrige plate (Part 2)

Use The **M6x20** to securely fasten the **Z carrige plate** onto the holes of **04Z_SFU2005 BallScrew Assembly _009.**
Tighten the set screws & make sure it sits flush.

Avoid excessive force, which may lead to damage or misalignment of components.
Ensure that the fasteners are tightened evenly to maintain proper alignment and stability.

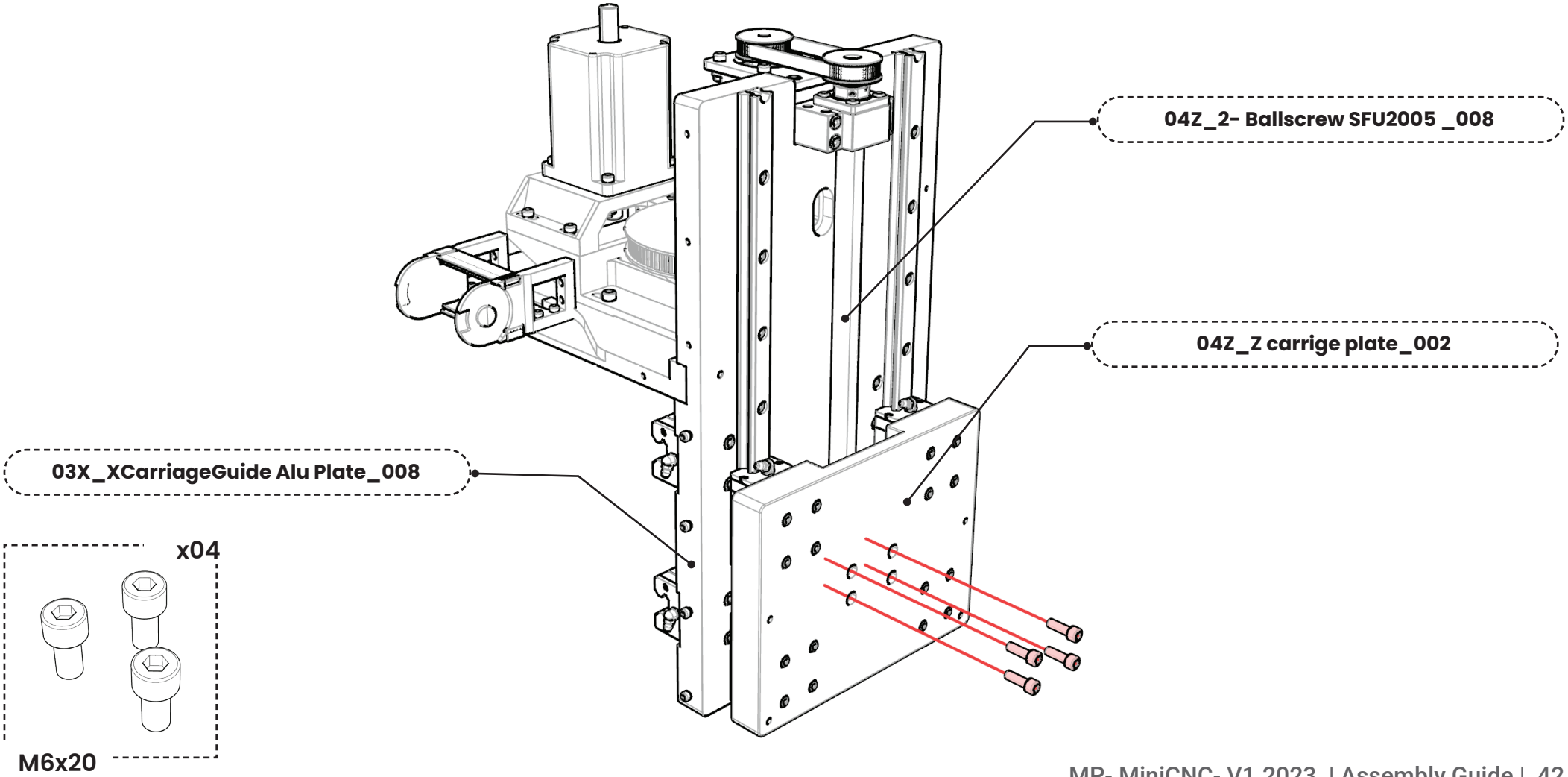

STEP . 29 Assemble the Z spindle plate

Use The **M6x40** to securely fasten the **Z spindle plate** onto the holes of **04Z_Z carrige plate_002.**
Tighten the set screws & make sure it sits flush.

Avoid excessive force, which may lead to damage or misalignment of components.
Ensure that the fasteners are tightened evenly to maintain proper alignment and stability.

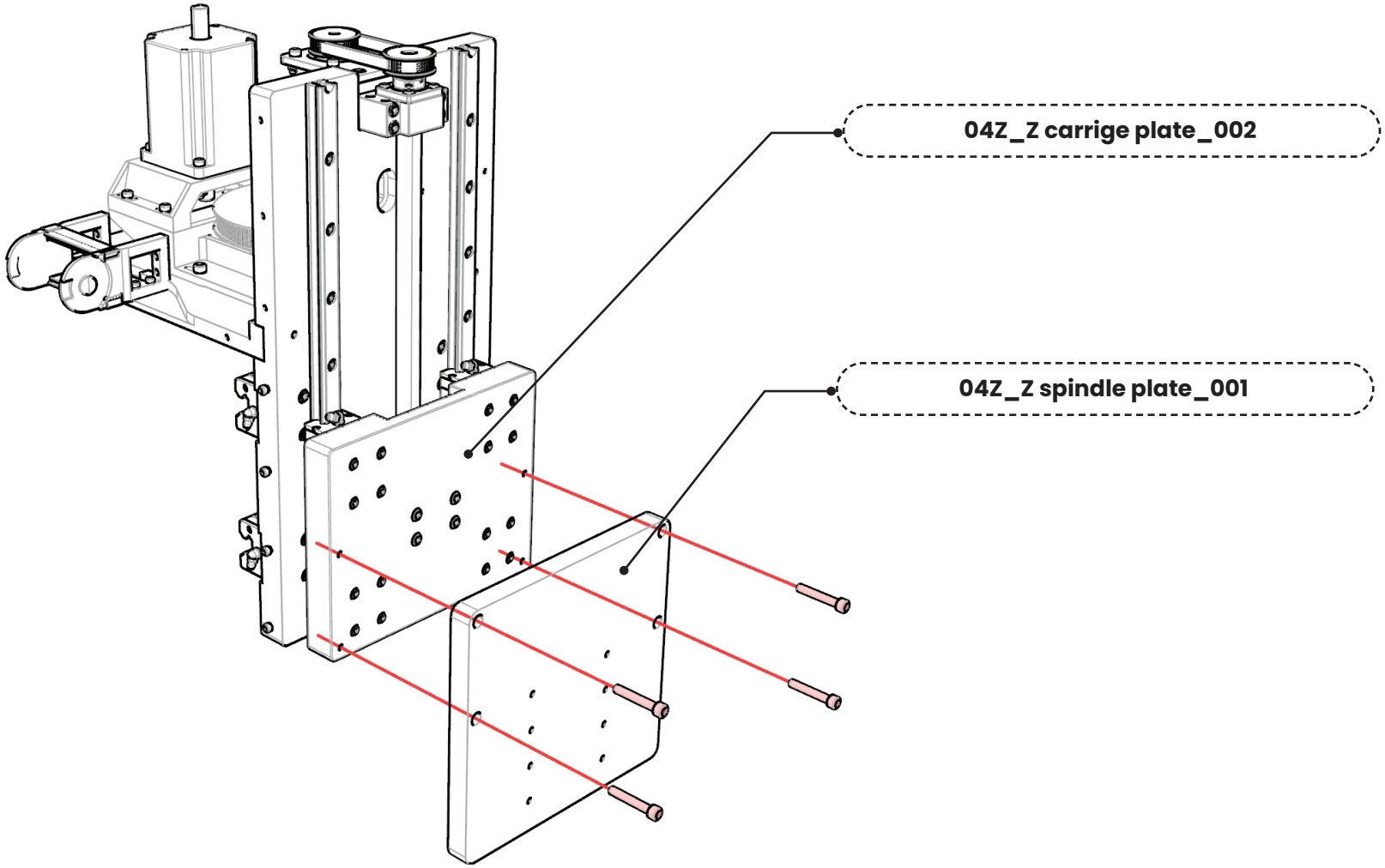

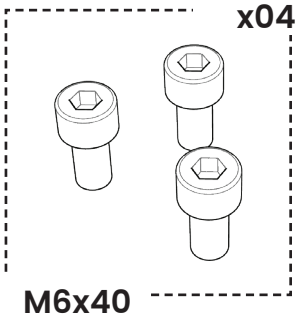

STEP . 30 Assemble the Z carrige plate (Part 2)

Use The **M6x40** to securely fasten the **Z spindle plate** onto the holes of **04Z_Z carrige plate_002.**
Tighten the set screws & make sure it sits flush.

Avoid excessive force, which may lead to damage or misalignment of components.
Ensure that the fasteners are tightened evenly to maintain proper alignment and stability.

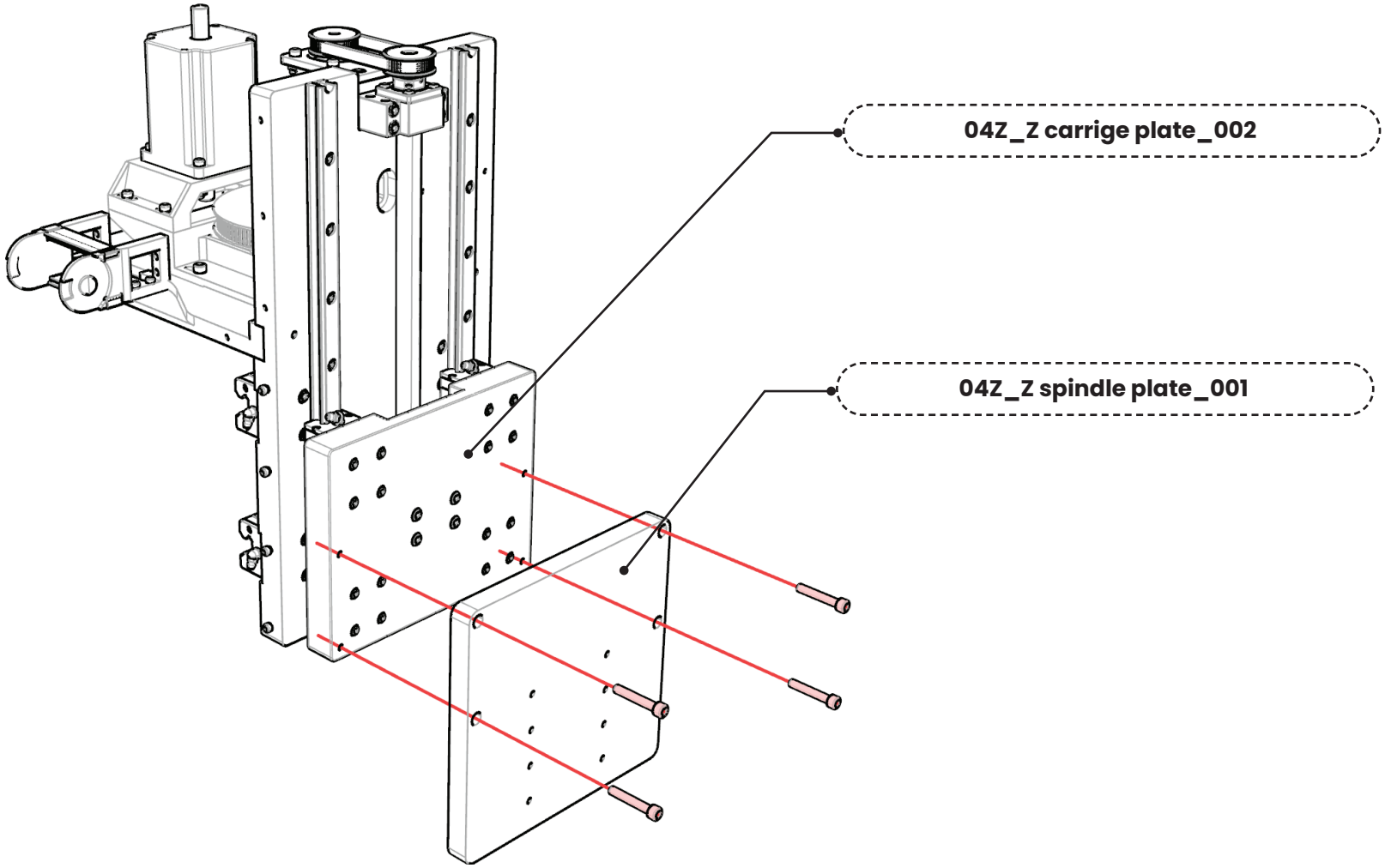

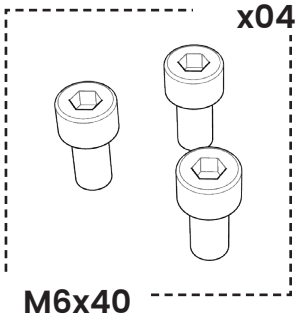

STEP . 31 Assemble the Z carrige plate (Part 2)

Use The **M6x40** to securely fasten the **Z spindle plate** onto the holes of **04Z_Z carrige plate_002.**
Tighten the set screws & make sure it sits flush.

Avoid excessive force, which may lead to damage or misalignment of components.
Ensure that the fasteners are tightened evenly to maintain proper alignment and stability.

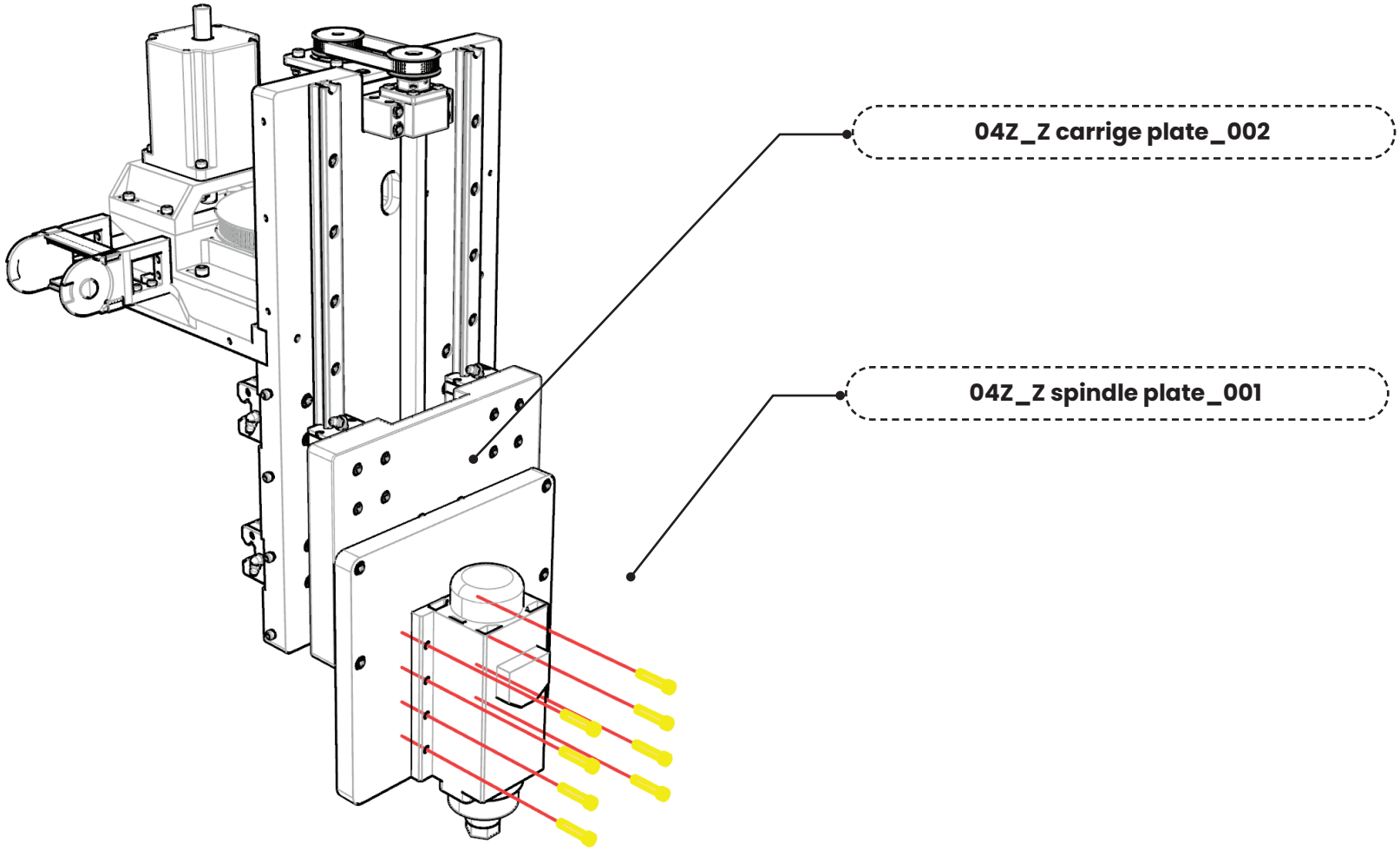

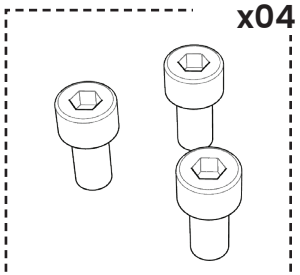

M6x40

STEP . 32 Assemble the Z Stepper Support

Use The **M6x18** to securely fasten the **Z Stepper Support** onto the holes of **CarriageGuide Alu Plate.**
Use The **M5x16** to securely fasten the **Nema23_StepMotorL57CM23** onto the holes of **04Z_Z Stepper Support_004.**
Tighten the set screws & make sure it sits flush.

Avoid excessive force, which may lead to damage or misalignment of components.
Ensure that the fasteners are tightened evenly to maintain proper alignment and stability.
Slide The motor to tense the belt.

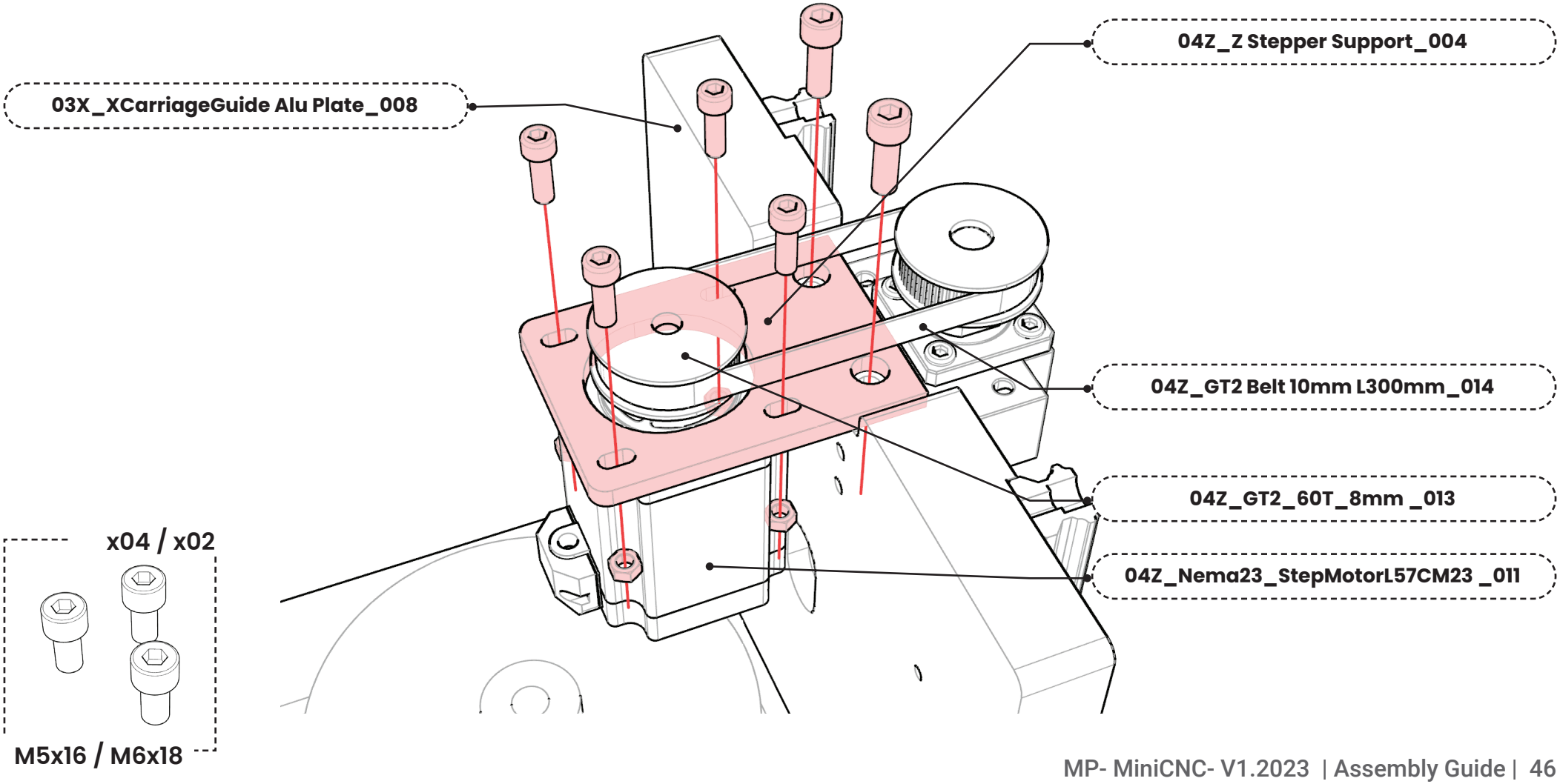

STEP . 33 Assemble the Z-SpindlemotorCover

Use The **M4x14** to securely fasten the **Z-SpindlemotorCover** onto the holes of **XCarriageGuide Alu Plate.**
Tighten the set screws & make sure it sits flush.

Avoid excessive force, which may lead to damage or misalignment of components.
Ensure that the fasteners are tightened evenly to maintain proper alignment and stability.

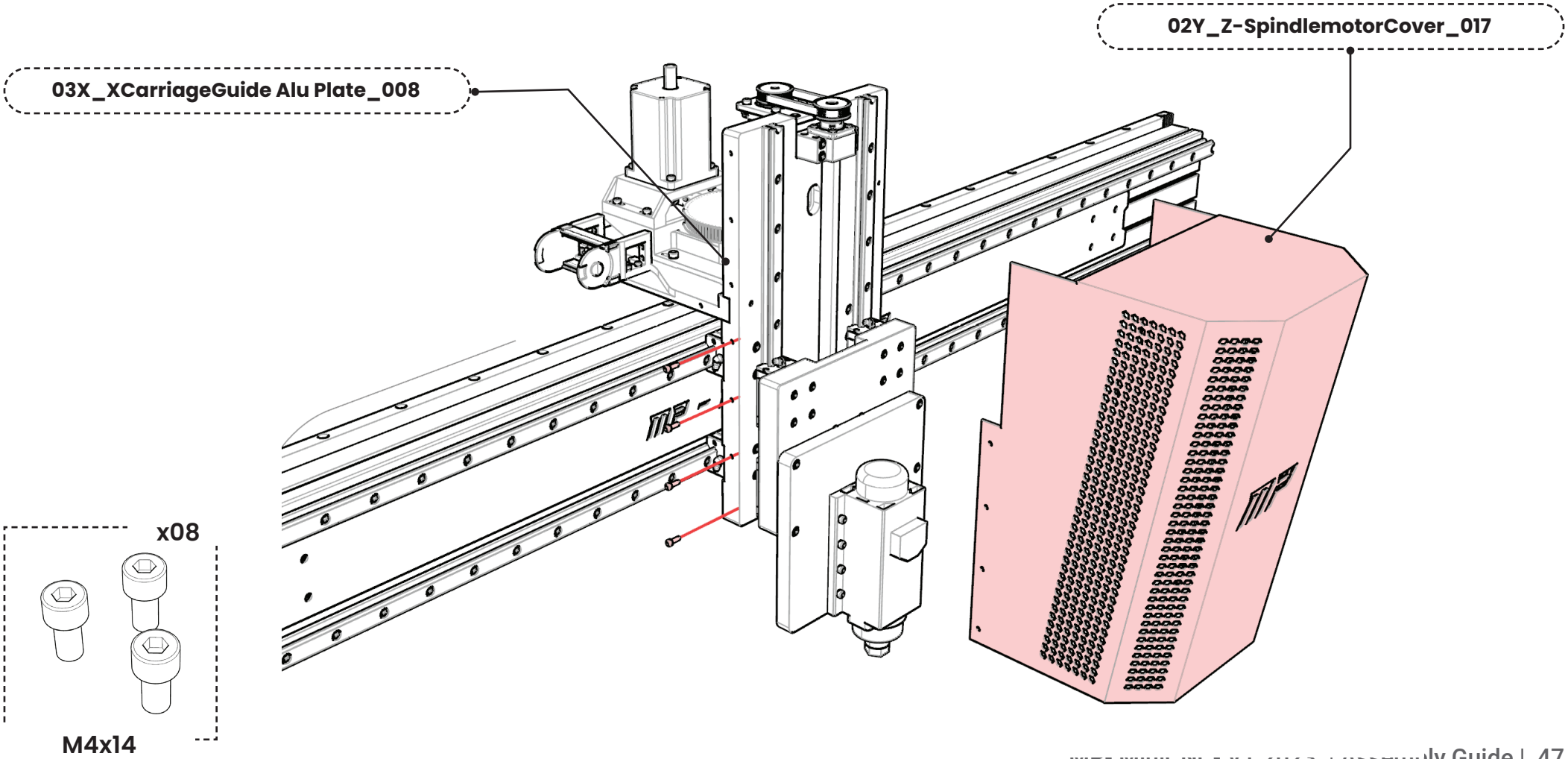

STEP . 34 Assemble the X motor Cover

Use The **M3x08** to securely fasten the **X motor Cover** onto the holes of **03X_XCarriageGuide Alu Plate_008.**
Tighten the set screws & make sure it sits flush.

Avoid excessive force, which may lead to damage or misalignment of components.
Ensure that the fasteners are tightened evenly to maintain proper alignment and stability.

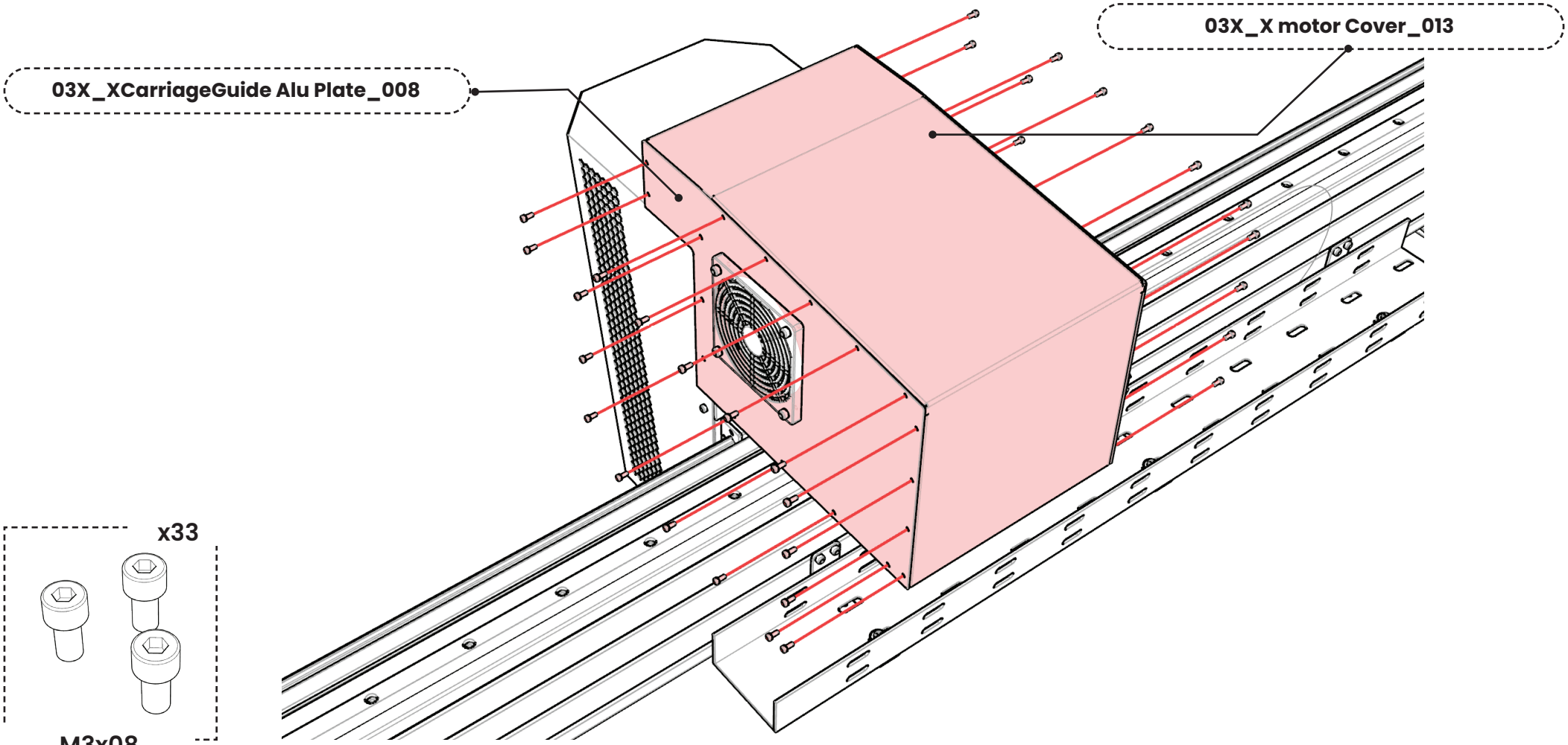

STEP . 35 Assemble theY-motorCover

Use The **M3x08** to securely fasten the **X motor Cover** onto the holes of **03X_XCarriageGuide Alu Plate_008.**
Tighten the set screws & make sure it sits flush.

Avoid excessive force, which may lead to damage or misalignment of components.
Ensure that the fasteners are tightened evenly to maintain proper alignment and stability.

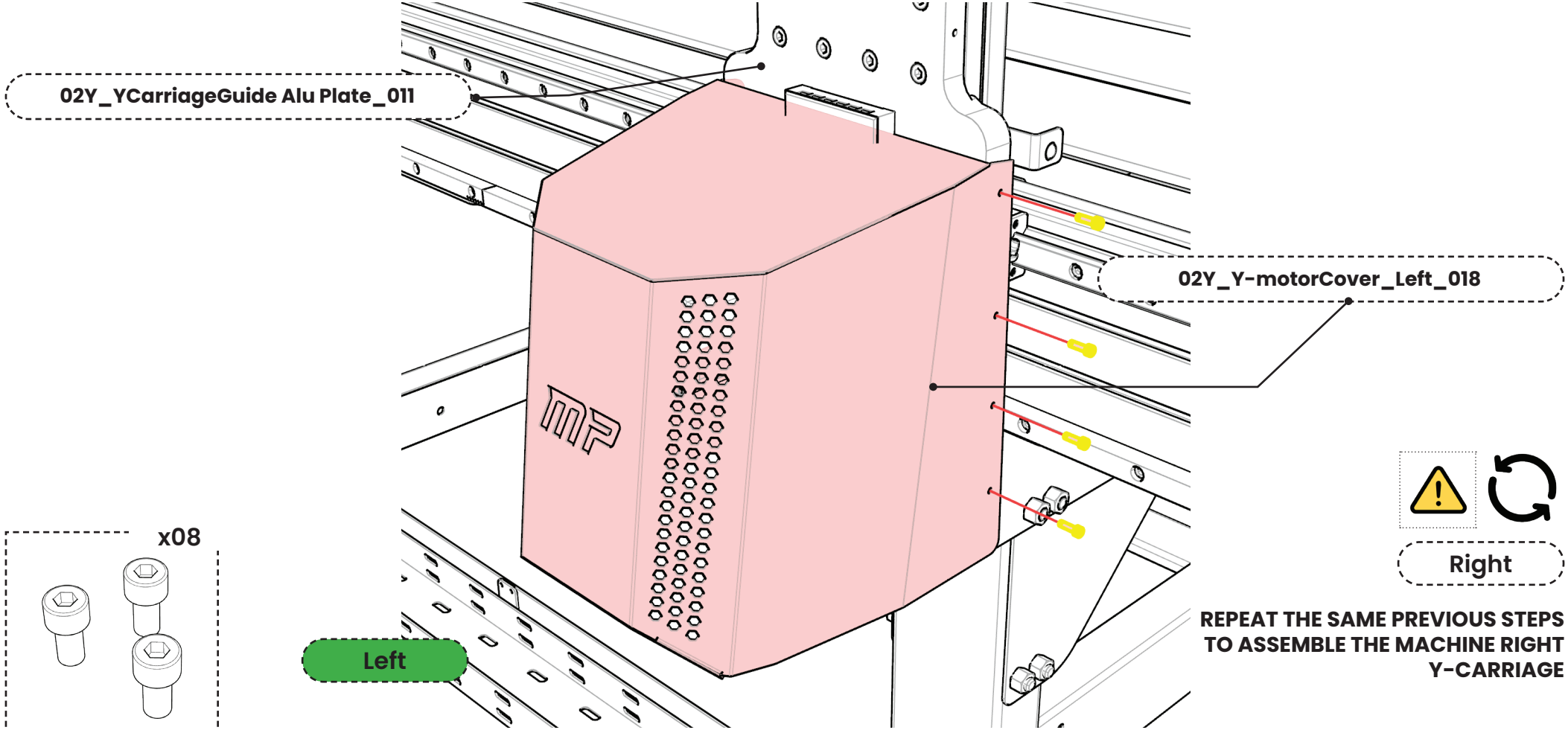

Right

REPEAT THE SAME PREVIOUS STEPS TO ASSEMBLE THE MACHINE RIGHT Y-CARRIAGE

STEP . 36 Assemble theY-Bumper + Y-StopPlate

Use The **M8x12** to securely fasten the **Y-StopPlate** onto the holes of **02Y_Y AxisMotionRail_ALU45x190_2880_001.**
Use The **M8x18** to securely fasten the **Y-StopPlate** onto the holes of **02Y_FramingALU45x90 1920mm _004**
Tighten the set screws & make sure it sits flush.

Avoid excessive force, which may lead to damage or misalignment of components.
Ensure that the fasteners are tightened evenly to maintain proper alignment and stability.

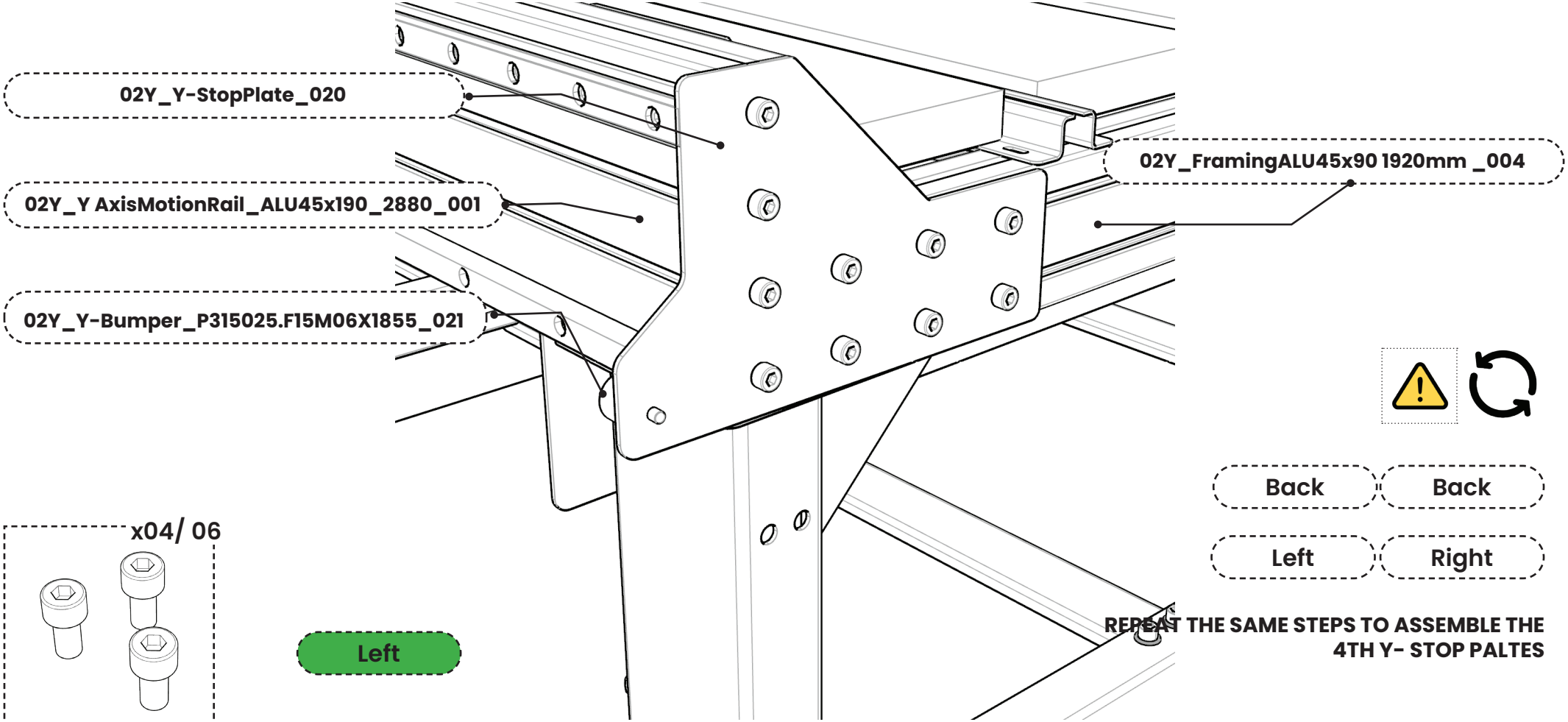

x04/ 06

M8x12 / M8x18

REPEAT THE SAME STEPS TO ASSEMBLE THE 4TH Y- STOP PALTES

STEP . 37 Assemble the Y_CablePathProfile

Use The **HolderCablePath** to securely fasten the **CablePathProfile** onto the holes of **001STR_AdjustmentPanEdges_007**
Tighten the set screws & make sure it sits flush.

Avoid excessive force, which may lead to damage or misalignment of components.
Ensure that the fasteners are tightened evenly to maintain proper alignment and stability.

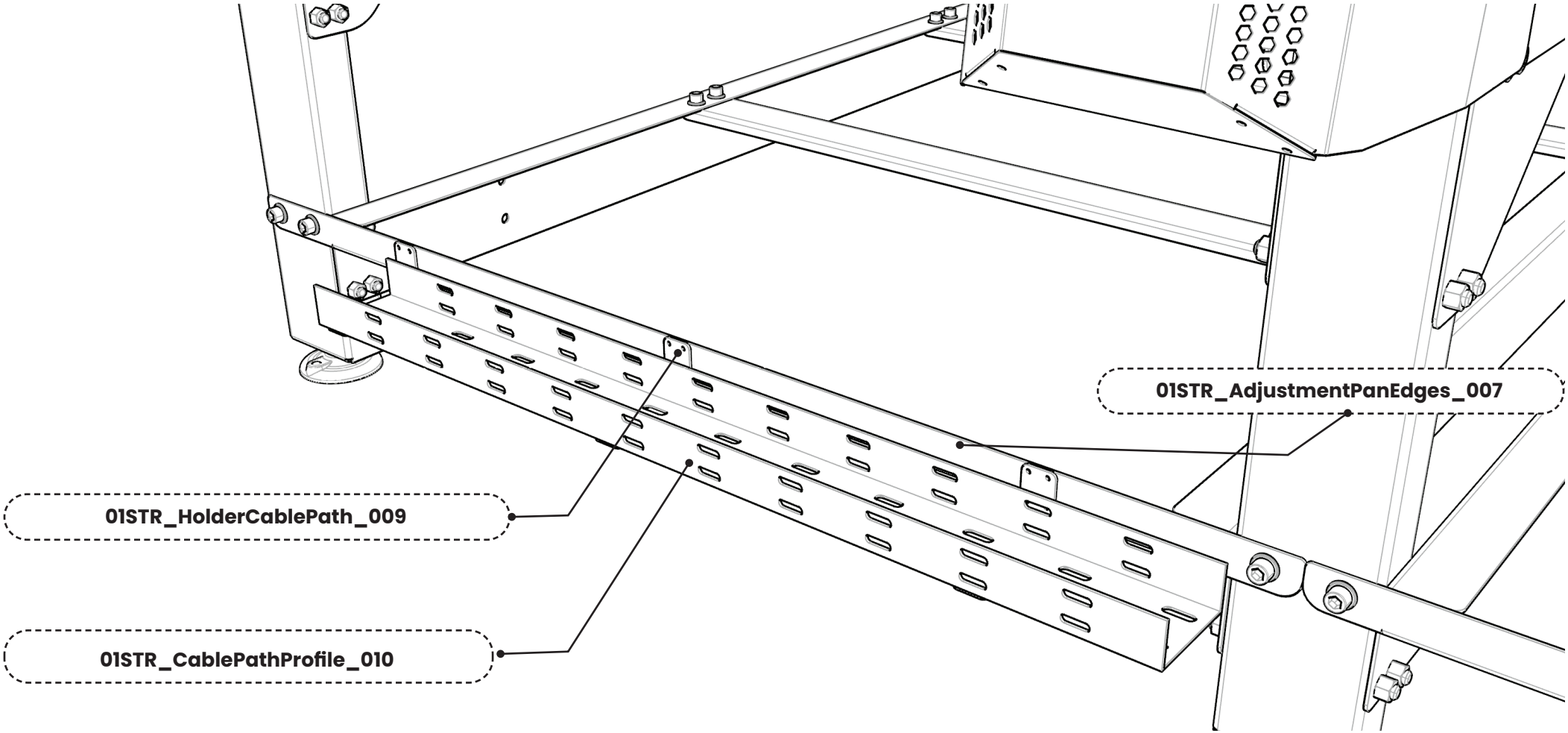

STEP . 38 Assemble the Y_CablePathProfile

Use The **HolderCablePath** to securely fasten the **CablePathProfile** onto the holes of **03X_X AxisMotionRail_90x180_2000mm _001**
Tighten the set screws & make sure it sits flush.
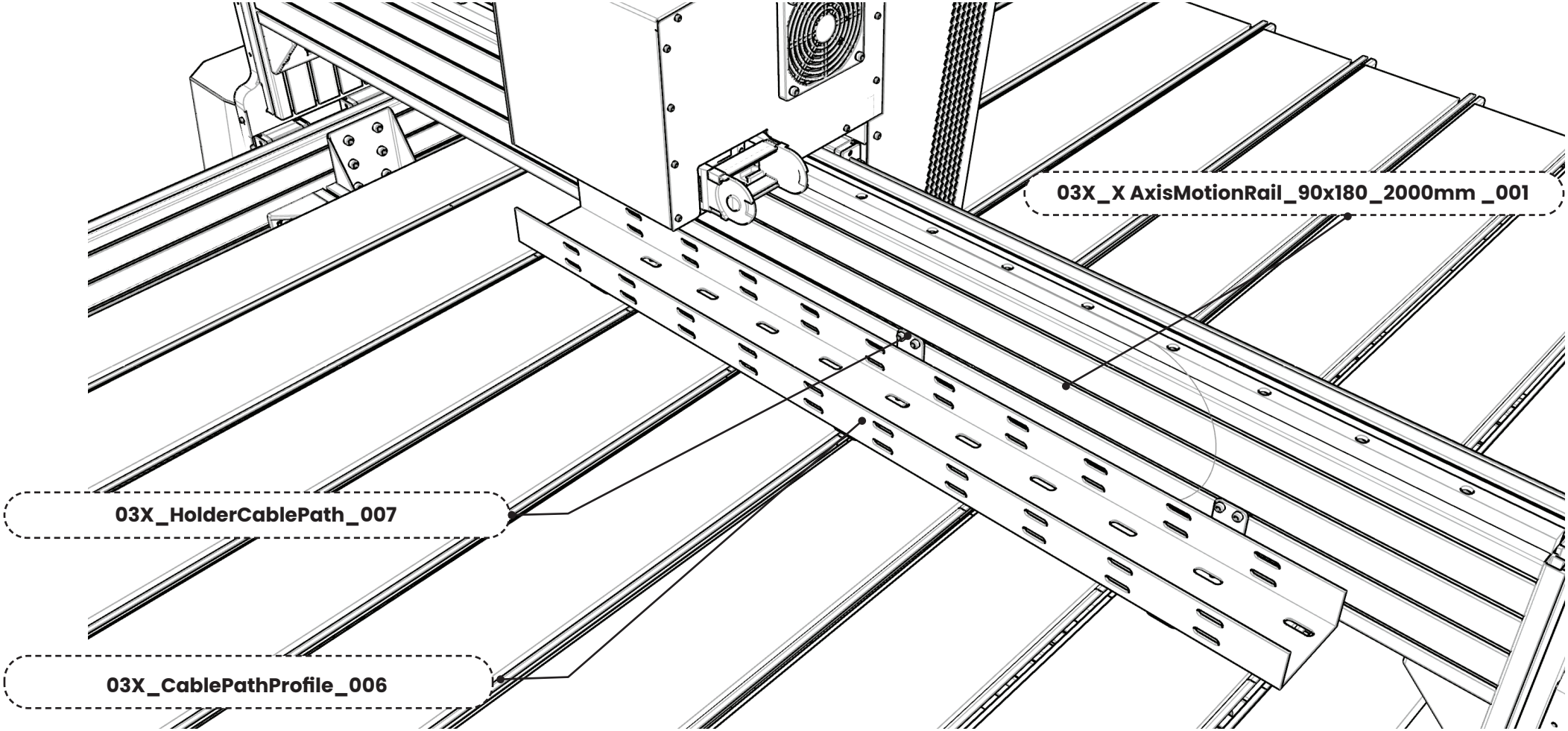
Avoid excessive force, which may lead to damage or misalignment of components.
Ensure that the fasteners are tightened evenly to maintain proper alignment and stability.