MP- Mini CNC Assembly guide

V1. 2023

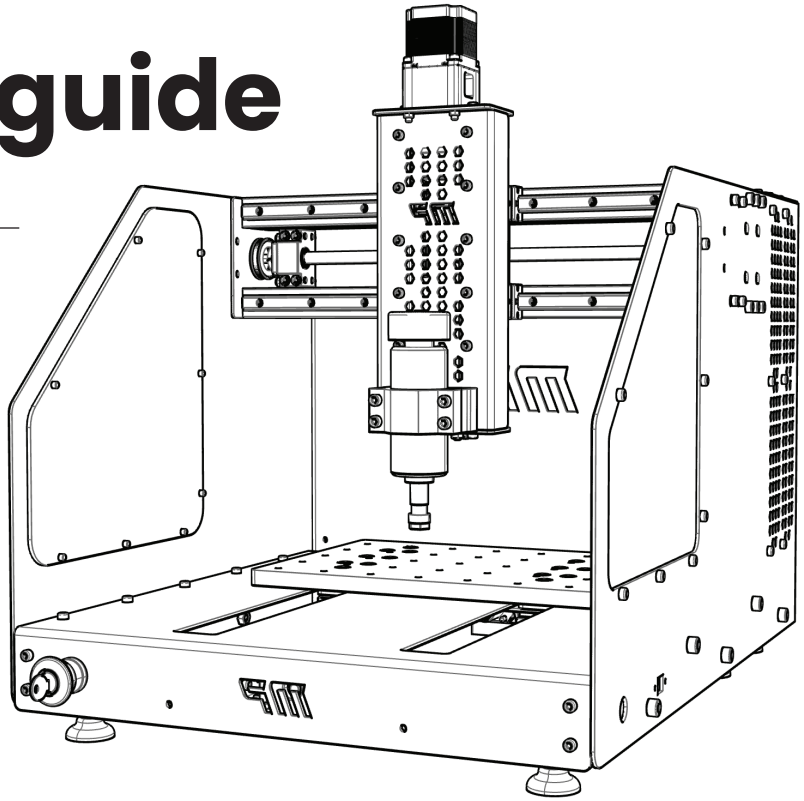

GitHub

*Edited by **Alila Kais** & **Alila Mhamed***

STE - FAB 619 | on demand fabrication

Mail : alilamhamed@fab619.tn
alilakais@fab619.tn

GSM : (216) 24 63 10 38
(216) 54 54 47 31

Adresse : **(Tunis)** Bureau A8-8 sis Golden Towers, Centre Urbain Nord
(Monastir) Fabrique entrepreneuriale, Technopole neotex, 5012, Sahline

www.fab619.tn

INMACHINES

FAB619

Authors

MP- MiniCNC machine has been designed and built by **Fab619 On-Demand-Fabrication** in collaboration with **InMachines Ingrassia GmbH &**

Team design

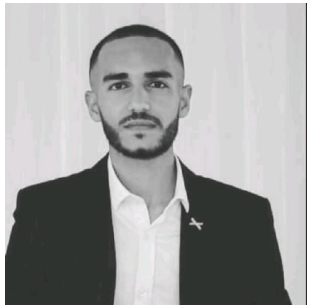

Kais ALILA | Alila Mhamed | ZOMITA Khayreddine | Ltifi Haythem | Samer Jawadi | Ahmed Kaddour belaid

The machine is part of the Digital4Job project for the open machine design and assembly workshop in Tunisia.

Acknowledgements

The development of this machine is part of Digital4Job Project implemented by :

- **Helmut-Schmidt-Universität Universität** der Bundeswehr Laboratorium Fertigungstechnik Holstenhofweg
- **OpenLab Hamburg**
- **GIZ** - Tunisie

Acknowledgements

Hardware design, CAD and PCB files, BOM, settings and other technical or design files are released under the following license:

- **CERN Open Hardware Licence Version 2 Weakly Reciprocal - CERN-OHL-W**
- **Assembly manual, pictures, videos, presentations, description text and other type of media are released under the following license:**
-
- **Creative-Commons-Attribution-ShareAlike 4.0 International - CC BY-SA 4.0**
- **License Owner InMachines Ingrassia GmbH**

Note

This documentation will be continuously improved as soon there are updates and/or improvements on the machine.

Disclaimer

This hardware/software is provided “as is”, and you use the hardware/software at your own risk. Under no circumstances shall any author be liable for direct, indirect, special, incidental, or consequential damages resulting from the use, misuse, or inability to use this hardware/software, even if the authors have been advised of the possibility of such damages.

MP- Mini CNC V1. 2023

Welcome to the assembly guide for the **MP-Mini CNC** ! We're excited to guide you through the process of assembling this cutting-edge CNC machine, designed to bring precision and versatility to your projects. This compact yet powerful CNC is equipped with the latest features to help you turn your creative ideas into reality.

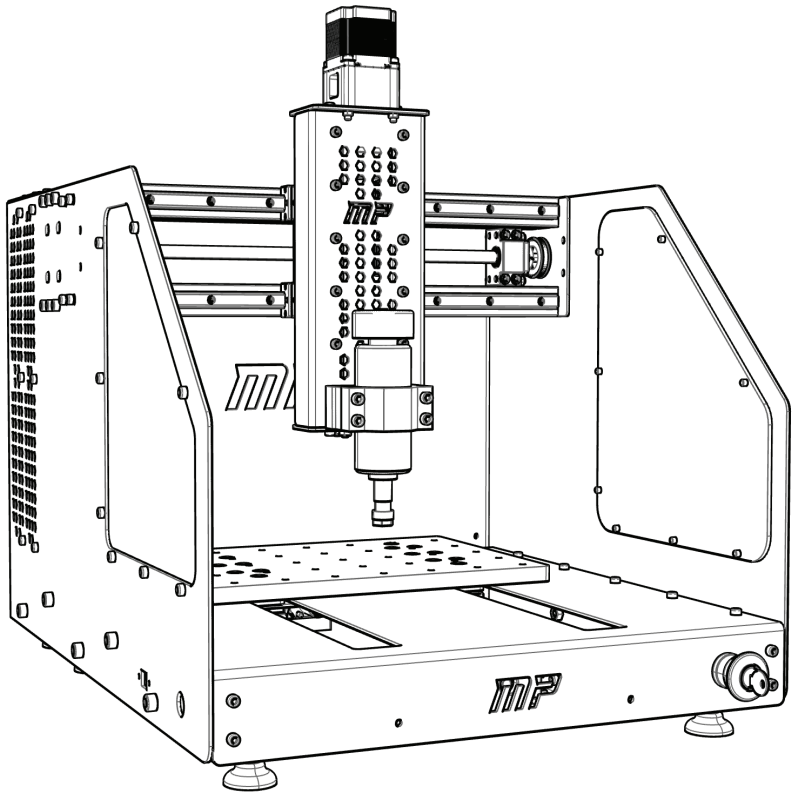

Key Features:

Precision Machining: The MP-Mini CNC V1. 2023 is engineered to deliver precision machining with accuracy and repeatability, making it ideal for a wide range of applications.

Compact Design: Despite its high-performance capabilities, this CNC machine boasts a space-saving design, making it suitable for both small workshops and professional settings.

User-Friendly Interface: With an intuitive control interface, even beginners can quickly learn to operate the MP-Mini CNC V1. 2023 efficiently.

Versatility: Whether you're into woodworking, engraving, or PCB milling, this CNC machine can handle a variety of materials and tasks, providing versatility to your projects.

Durable Construction: Built with high-quality materials and components, the MP-Mini CNC V1. 2023 is designed to withstand the demands of continuous use.

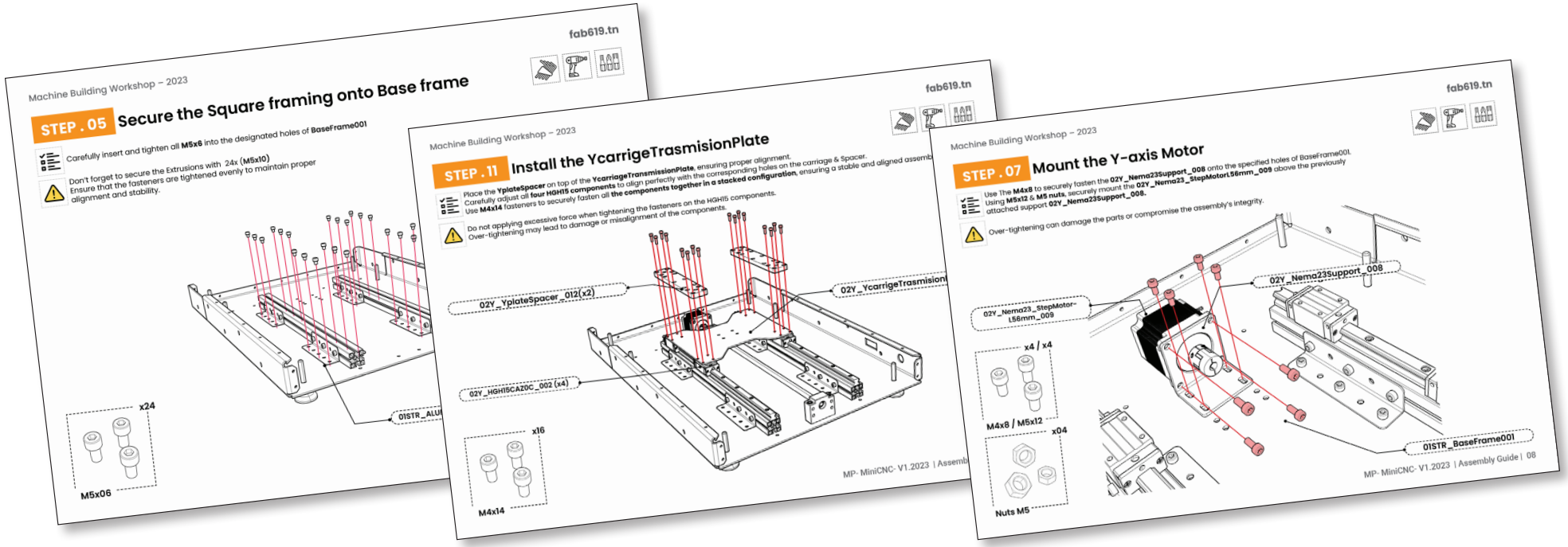

Our Assembly Guide

This assembly guide is designed to assist you step by step in assembling your **MP-Mini CNC V1. 2023**. Each section will provide clear and detailed instructions, along with professional tips and cautions, to ensure a smooth and successful assembly process.

Safety First

Before we begin, please ensure that you have read and understood all safety guidelines included with your CNC machine. Your safety and the safety of those around you is our top priority. Always wear appropriate personal protective equipment (PPE) when necessary.

Preparation

To get started, make sure you have all the necessary tools and materials ready as specified in the machine's manual. Clear and well-lit workspace is essential for a smooth assembly process.

Now, let's embark on this assembly journey together and turn your MP-Mini CNC V1. 2023 into a valuable tool for your creative endeavors. Follow each step meticulously, and don't hesitate to reach out if you have any questions or need assistance.

.....Let's begin!

01.Structure

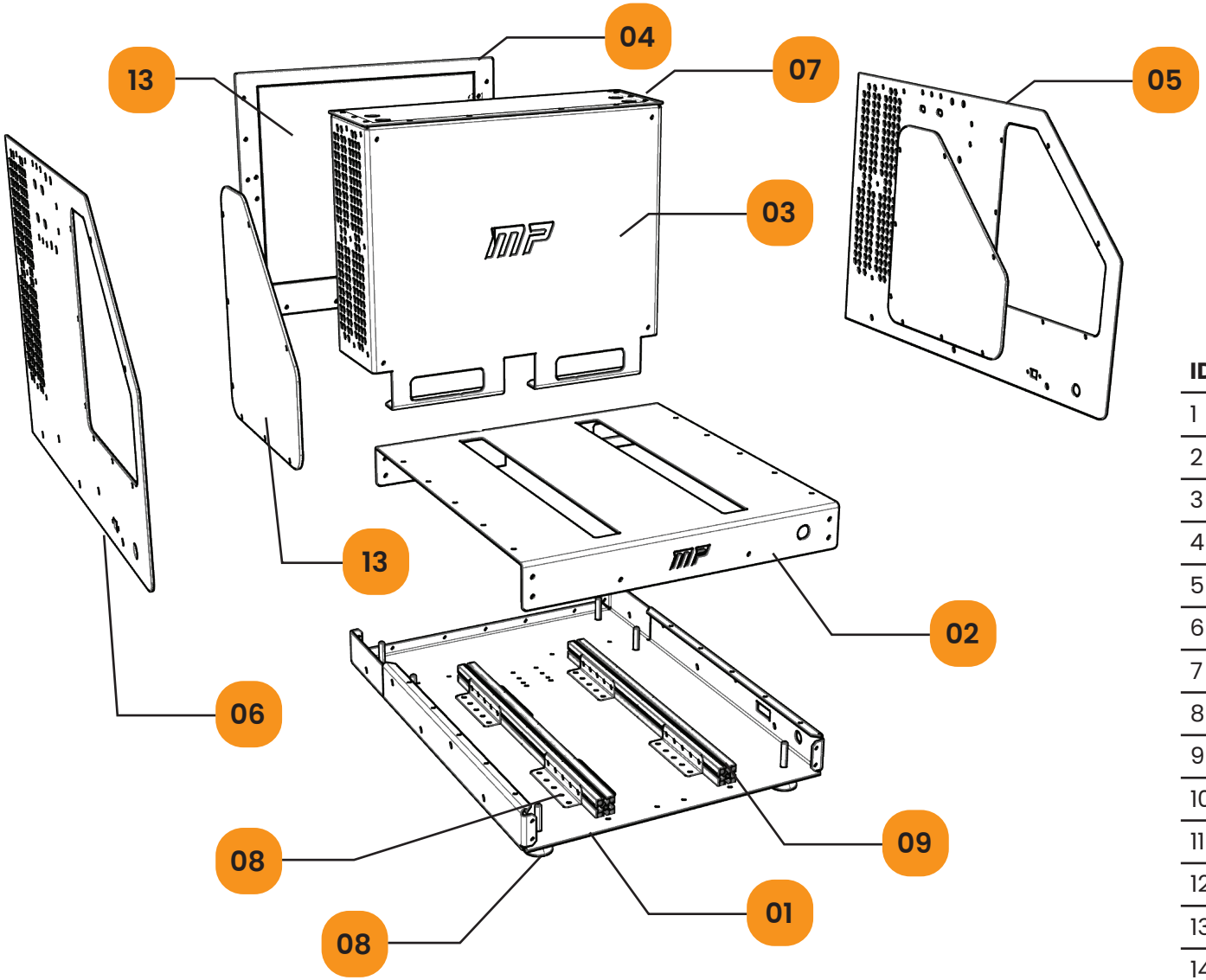

ID	Part.Name	QTE
1	01STR_BaseFrame001	1
2	01STR_BaseFrame002	1
3	01STR_FrontFrame003	1
4	01STR_BackFrame004	1
5	01STR_RightFrame005	1
6	01STR_LeftFrame006	1
7	01STR_UpperFrame007	1
8	01STR_ALUFramingSquare008	8
9	01STR_ALU3030_009	2
10	01STR_ElecCapot_010	1
11	01STR_ElecCapot_Hinge_011	2
12	01STR_ElecCapot_Locker_012	1
13	01STR_PlexiG Panel_013	2
14	01STR_FooterP90040.TM08X4501_014	6

02. Y axis

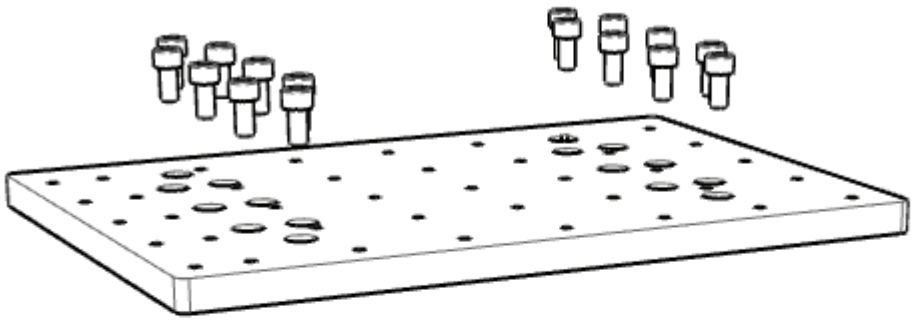

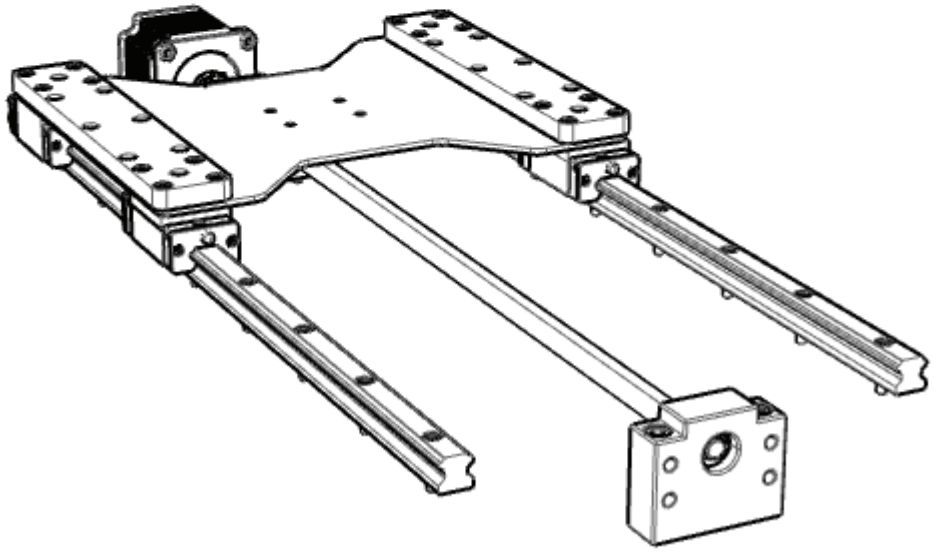

ID	Part.Name	QTE
15	02Y_HGR15R500C_001	2
16	02Y_HGH15CAZ0C_002	4
18	02Y_SFU1204Nut _003	1
19	02Y_SFU1204Nut_Holder _004	1
20	02Y_BallScrewSFU1204 _005	1
21	02Y_BK1033_WheelBearing_006	1
22	02Y_BF10_WheelBearing_007	1
23	02Y_Nema23Support_008	1
24	02Y_Nema23_StepMotorL56mm_009	1
25	02Y_D20L25 Jaw Coupler_010	1
26	02Y_YcarrigeTrasmisionPlate_011	1
27	02Y_YplateSpacer_012	2
28	02Y_YRoutingplate_013	1
29	02Y_YSensor_014	1

03. X axis

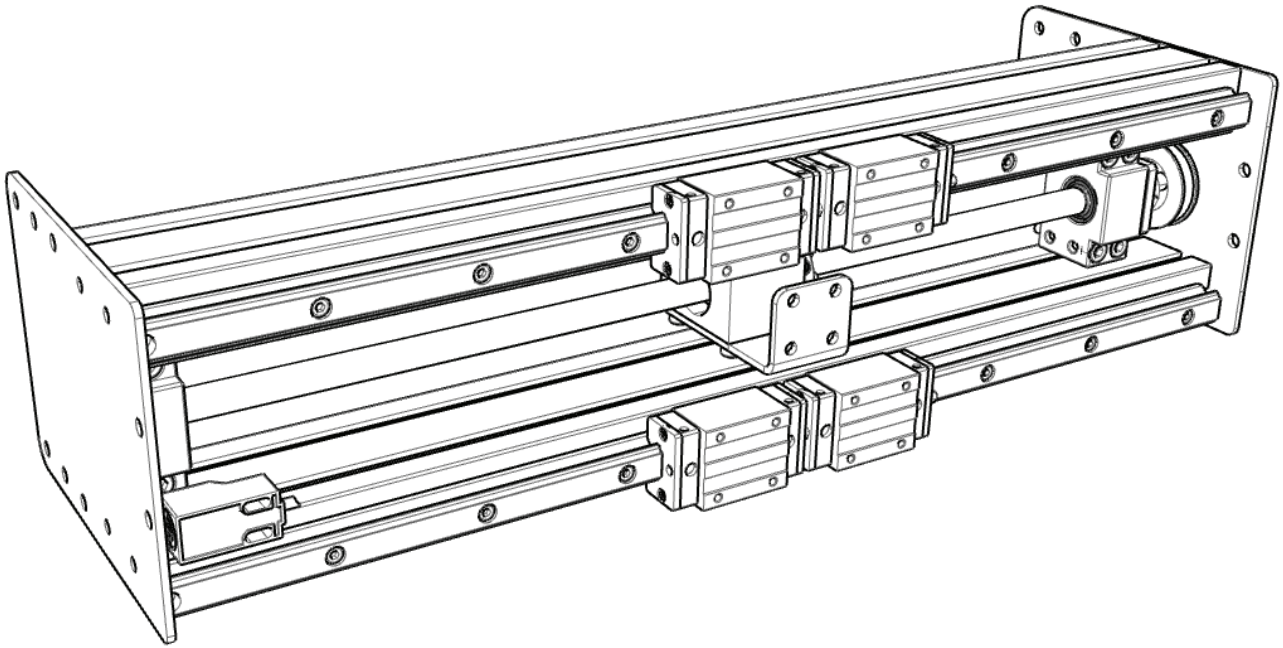

ID	Part.Name	QTE
30	03X_Right panel Support_001	1
31	03X_Left panel Support_002	1
32	03X_Rear panel Support_003	1
33	03X_ALU3060P_004	2
34	03X_HGH15CAZ0C_005	4
35	03X_HGR15R500C_006	2
36	03X_SFU1204Nut _007	1
37	03X_SFU1204Nut_Holder _008	1
38	03X_SFU Nut Support_009	1
39	03X_BallScrewSFU1204 _010	1
40	03X_BK10_WheelBearing_011	1
41	03X_BF10_WheelBearing_012	1
42	03X_Stepper23 SpacerSupport_013	1
43	03X_Nema23_StepMotorL56mm_014	1
44	03X_GT2_60T_8mm_015	1
45	03X_GT2_60T_8mm_Small_016	1
46	03X_Timing Belt Gt2 6mm 240mm_017	1
47	03X_Sensor_SN04-N_018	1

04. Z axis

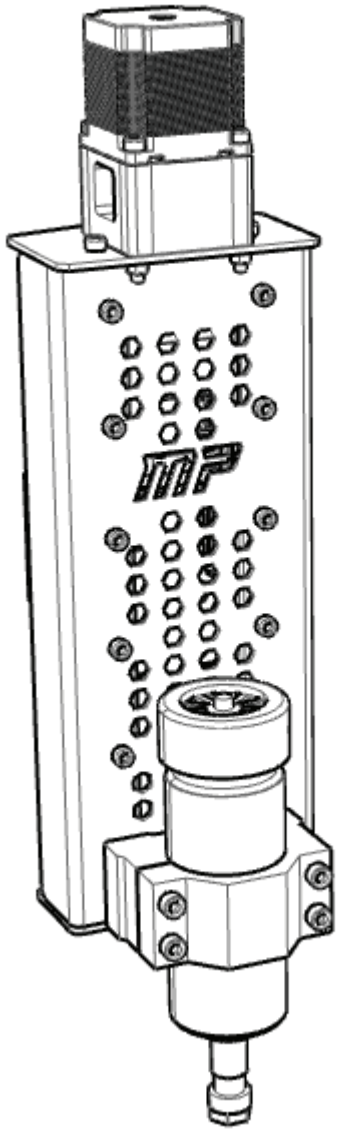

ID	Part.Name	QTE
48	04Z_Z carrige plate_001	1
49	04Z_Upper Support Plate_002	1
50	04Z_BottomSupport Plate_003	1
51	04Z_ALU2020P_004	2
52	04Z_MGNR12R300CM_005	2
53	04Z_MGN12H_006	4
54	04Z_SFU1204Nut _007	1
55	04Z_SFU1204Nut_Holder _008	1
56	04Z_BallScrewSFU1204 _009	1
57	04Z_Up6000zzBearing Assembly_010	1
58	04Z_Bottom608ZZBearing Assembly_011	1
59	04Z_CoverFrontPlate_012	1
60	04Z_Stepper23 SpacerSupport_013	1
61	04Z_D20L25 Jaw Coupler_014	1
62	04Z_Nema23_StepMotorL56mm_015	1
63	04Z_500w Spindle Mount_016	1
64	04Z_500w Spindle_017	1
65	04Z_Sensor_SN04-N_018	1

STEP . 01 Install machine Footers

Place the **01STR_FooterP90040** under the **01STR_BaseFrame001**.
Secure it with **M8 Nuts**.

It is strongly recommended to assemble the frame on a known flat surface (such as a solid table, work surface or similar). Otherwise, try to adjust leveling with the footers above.

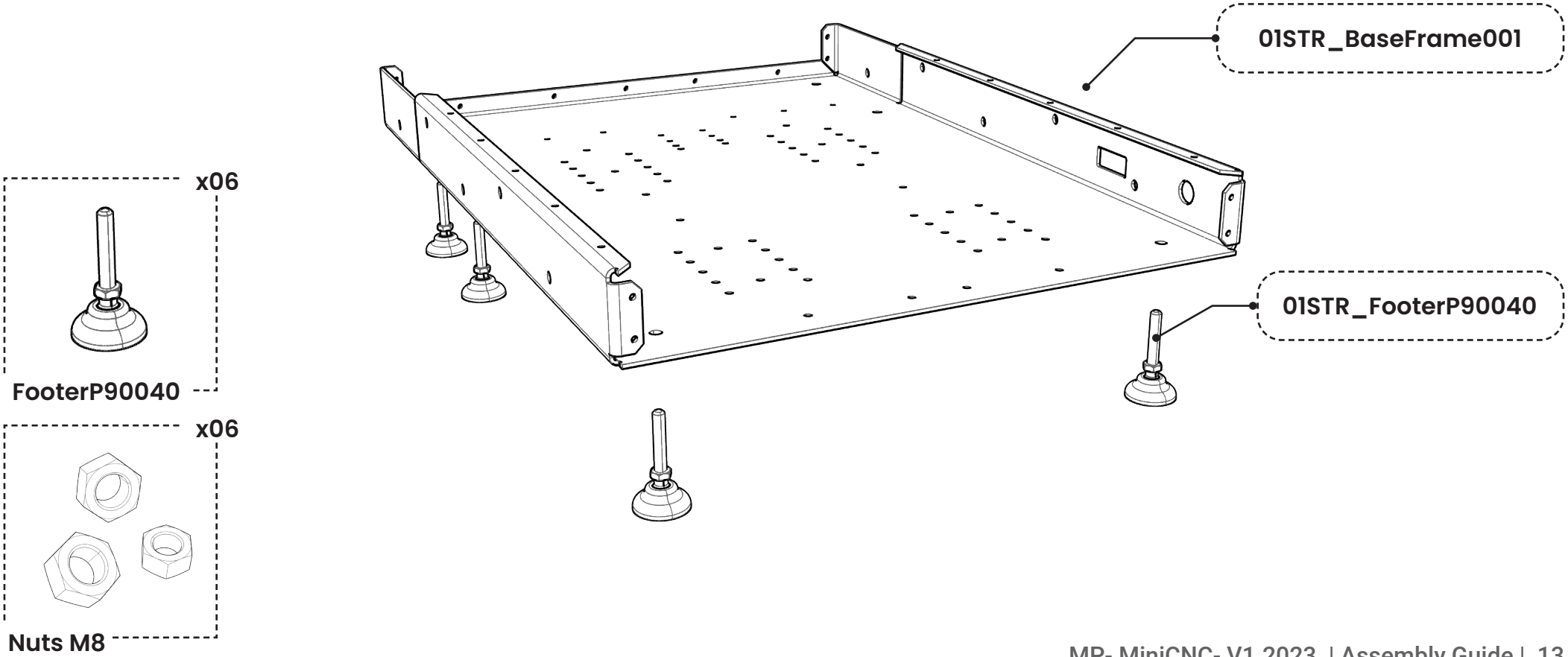

STEP . 02 Install the ALU3030 extrusions (Part 1)

Place the **M5x10** under the **01STR_BaseFrame001**.
Insert **T-Slot M5** to secure them.

Do not tighten the screws before placing the **ALU3030 Extrusions**.
Face **T-Slot M5** to the right direction before sliding the Extrusions.

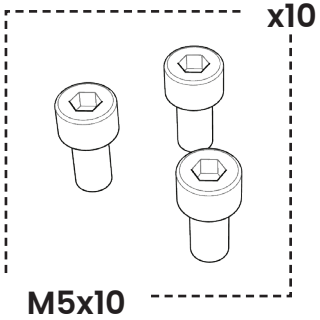

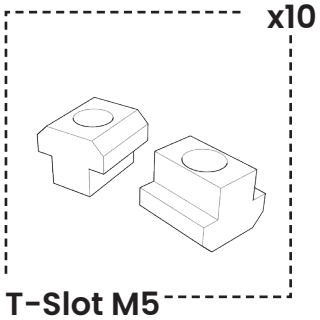

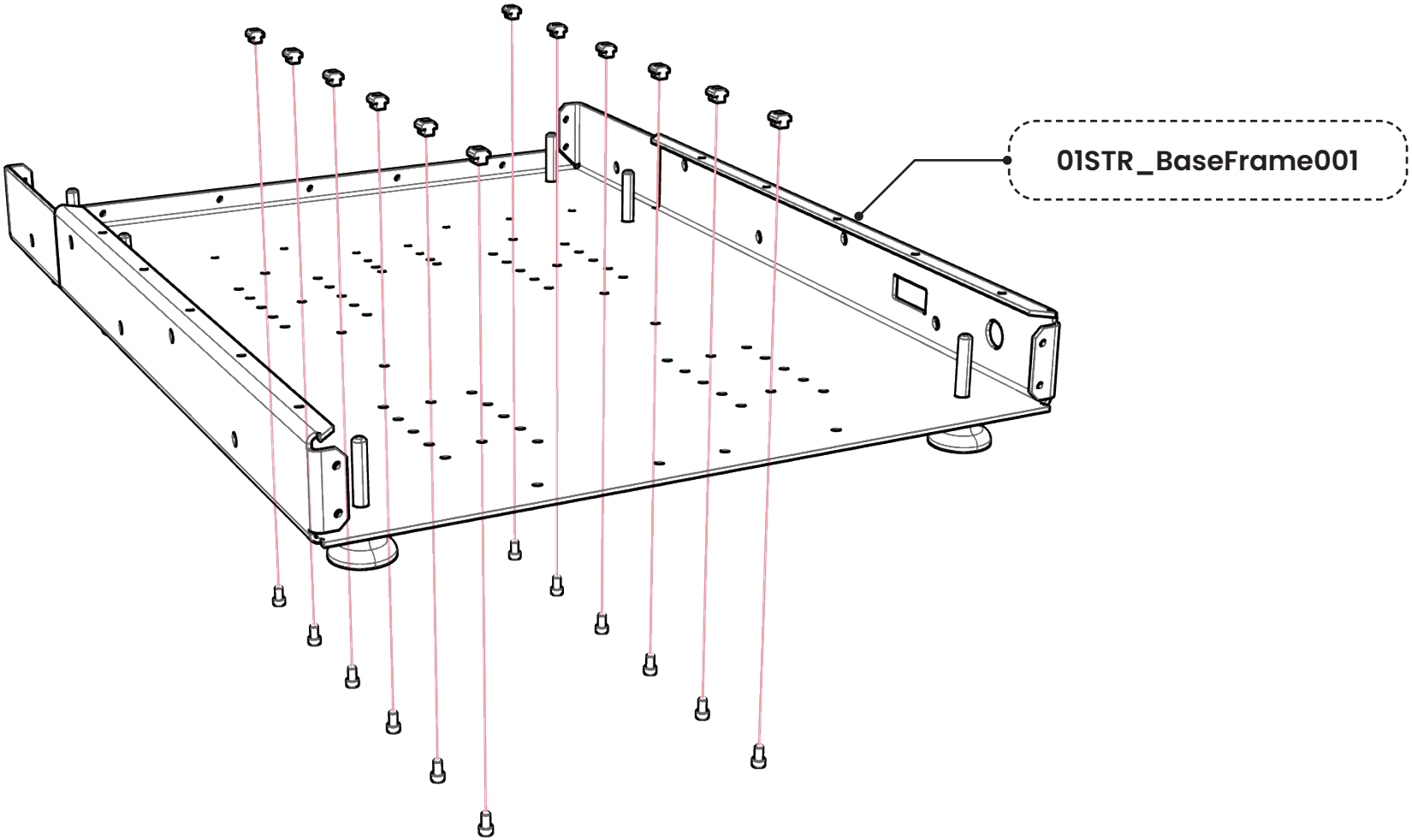

STEP . 03 Install the ALU3030 extrusions (Part 2)

Place / Slide the **ALU3030 Extrusions** above the **01STR_BaseFrame001**.
Tighten the screws to secure the extrusion.

Do not Forget to place the extrusions on the positioning lines to ensure accurate measurements and alignments

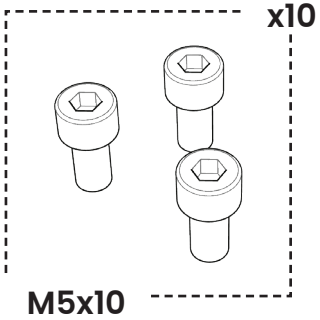

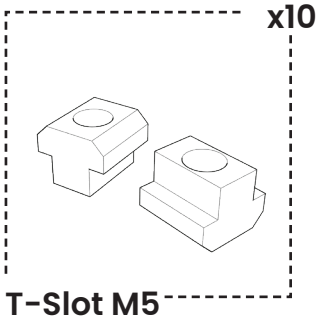

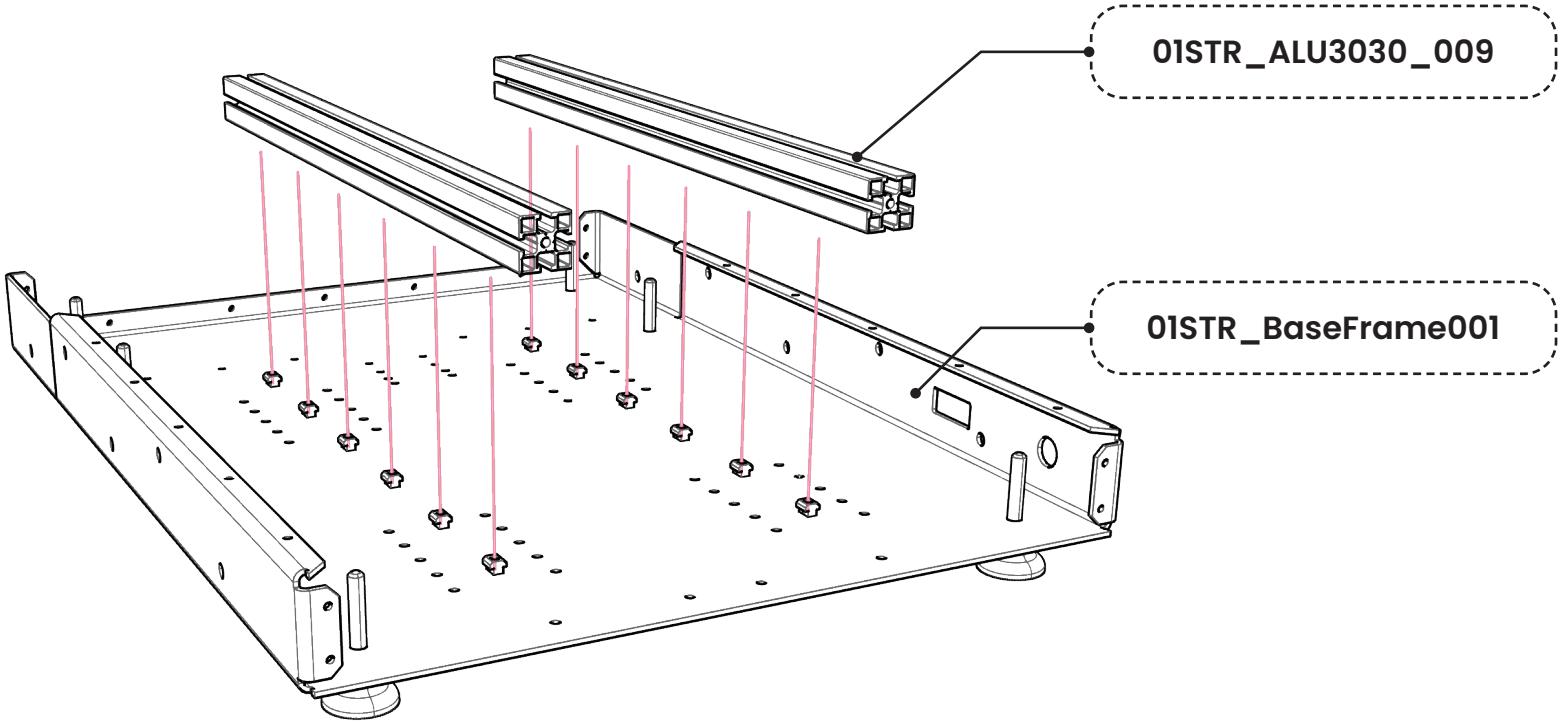

STEP . 04 Slide the Square framing into extrusions

Carefully slide the **01STR_ALUFramingSquare008** onto the **01STR_ALU3030_009**
Align the assembled components according to the designated holes on the **01STR_BaseFrame001**

Make sure that both pieces are properly aligned.
Take your time to ensure precise alignment, as this is crucial for the overall stability and functionality of the assembly.

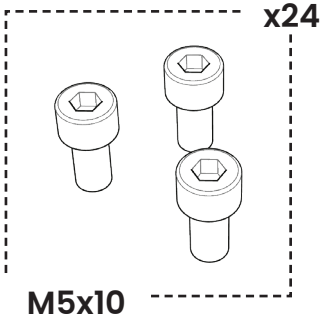

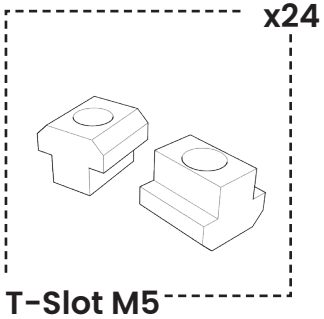

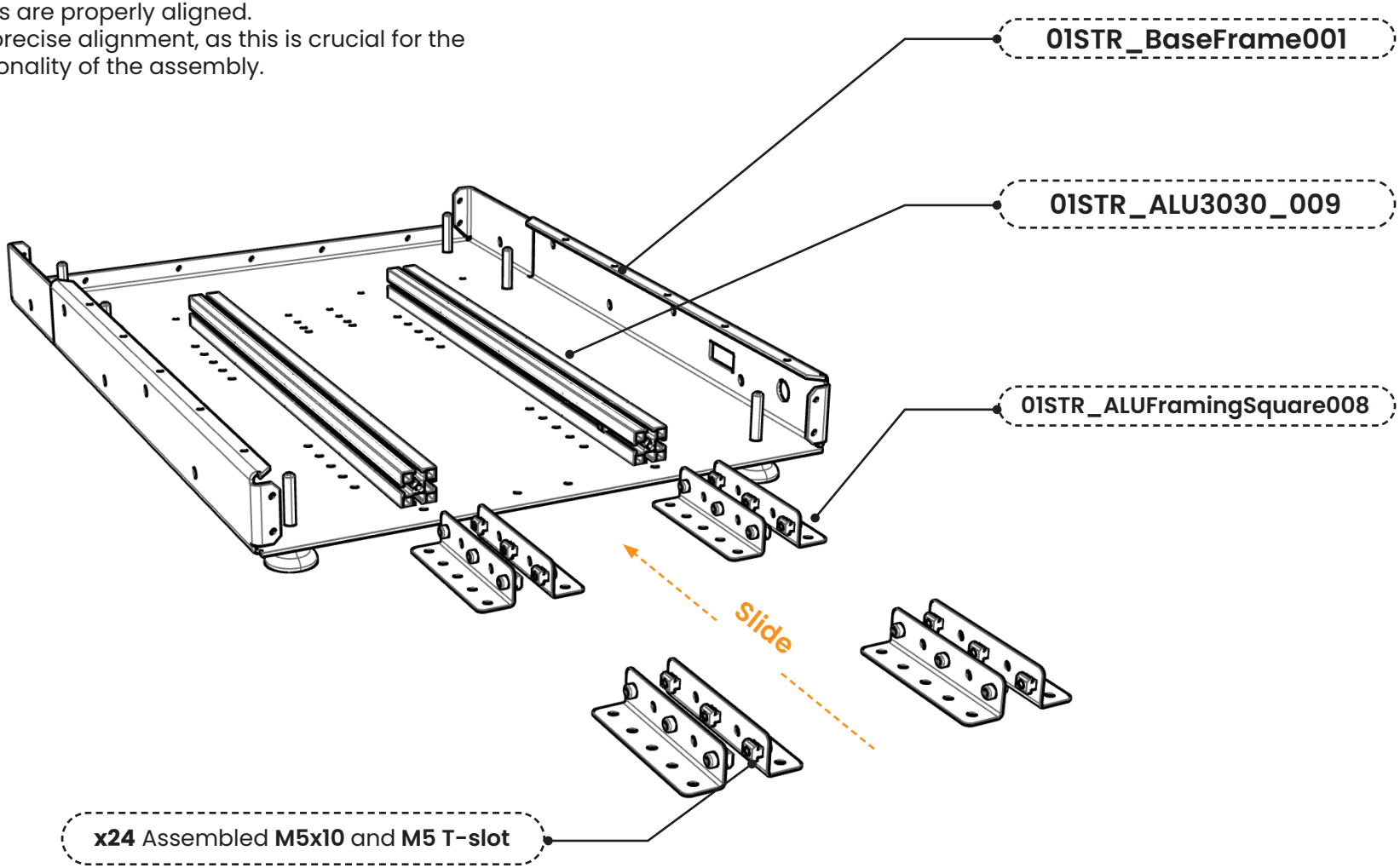

STEP . 05 Secure the Square framing onto Base frame

Carefully insert and tighten all **M5x6** into the designated holes of **BaseFrame001**

Don't forget to secure the Extrusions with 24x (**M5x10**)
Ensure that the fasteners are tightened evenly to maintain proper alignment and stability.

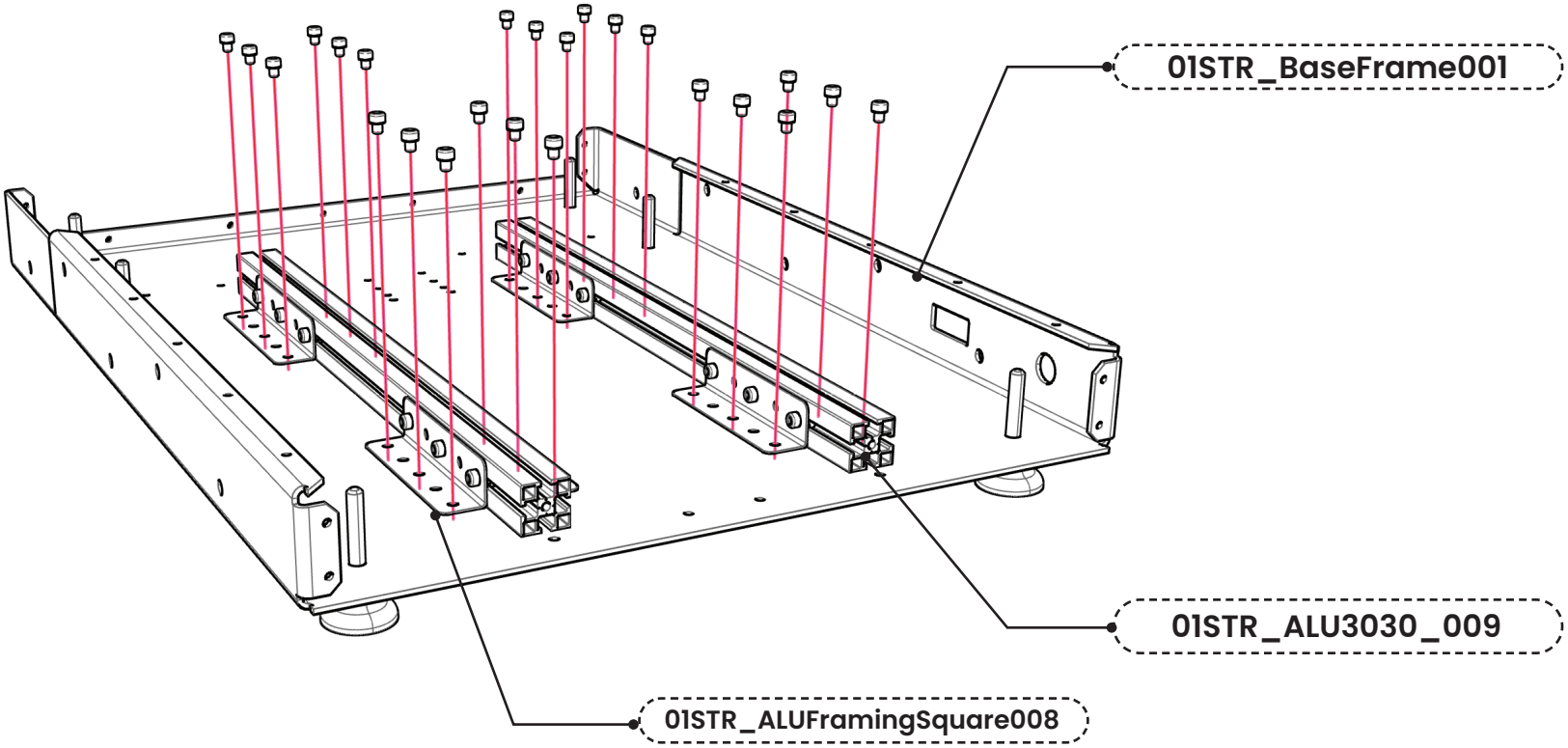

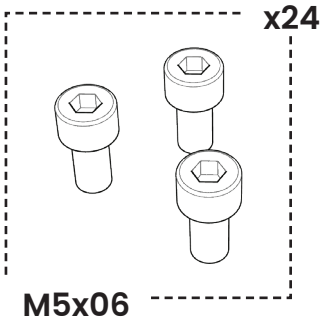

STEP . 06 Place the Y-axis Guiding Rails

Insert the **M4x18** through the rails and into the **M4 T-slots**
Carefully Place the Y-guiding rails **02Y_HGR15R500C_001** on the Extrusion.
Carefully tighten the fasteners to securely attach the Y-guiding rails to the extrusion

When tightening the fasteners, exercise caution to prevent the **02Y_HGH15CAZ0C_002** from sliding out of rails

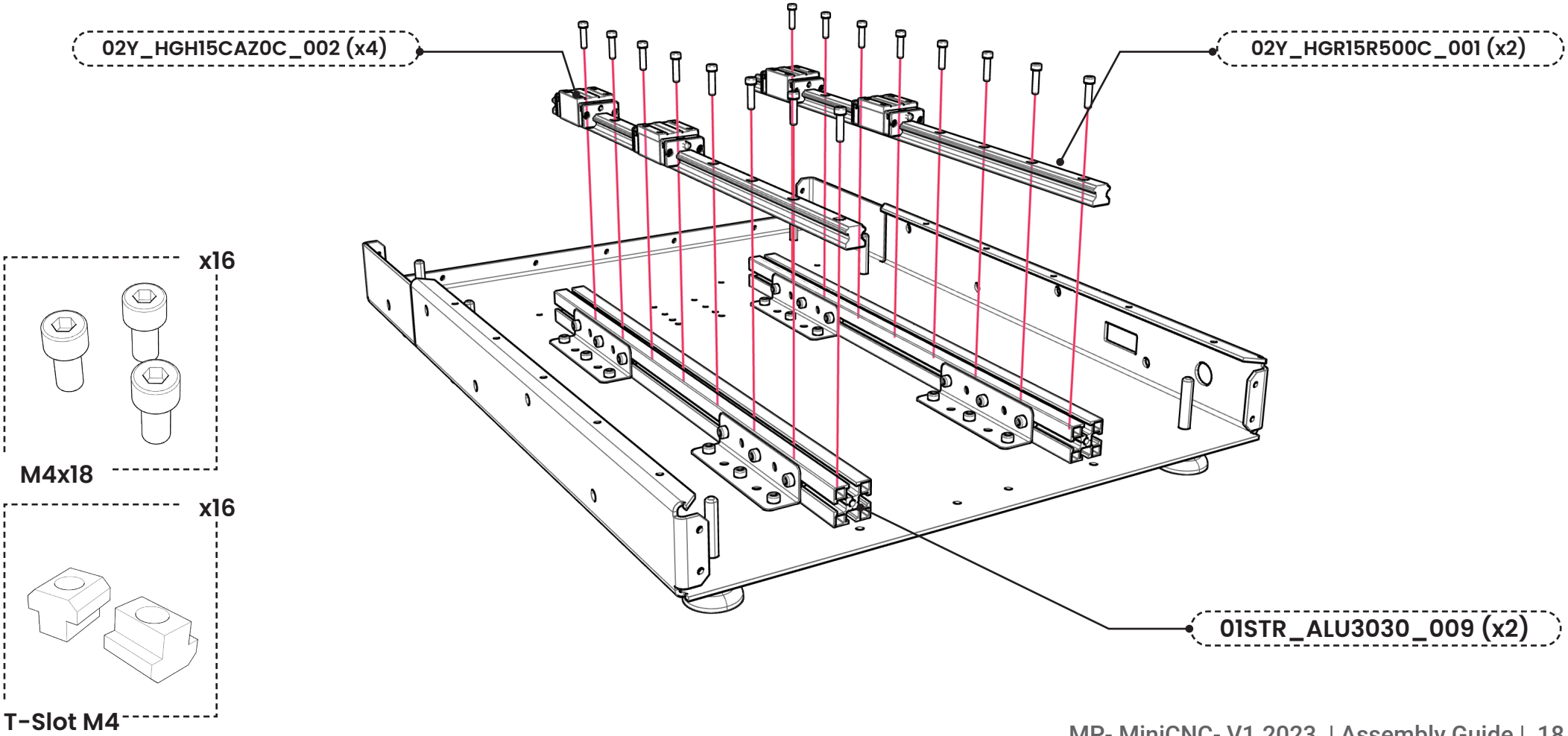

STEP . 07 Mount the Y-axis Motor

Use The **M4x8** to securely fasten the **02Y_Nema23Support_008** onto the specified holes of BaseFrame001. Using **M5x12** & **M5 nuts**, securely mount the **02Y_Nema23_StepMotorL56mm_009** above the previously attached support **02Y_Nema23Support_008.**

Over-tightening can damage the parts or compromise the assembly's integrity.

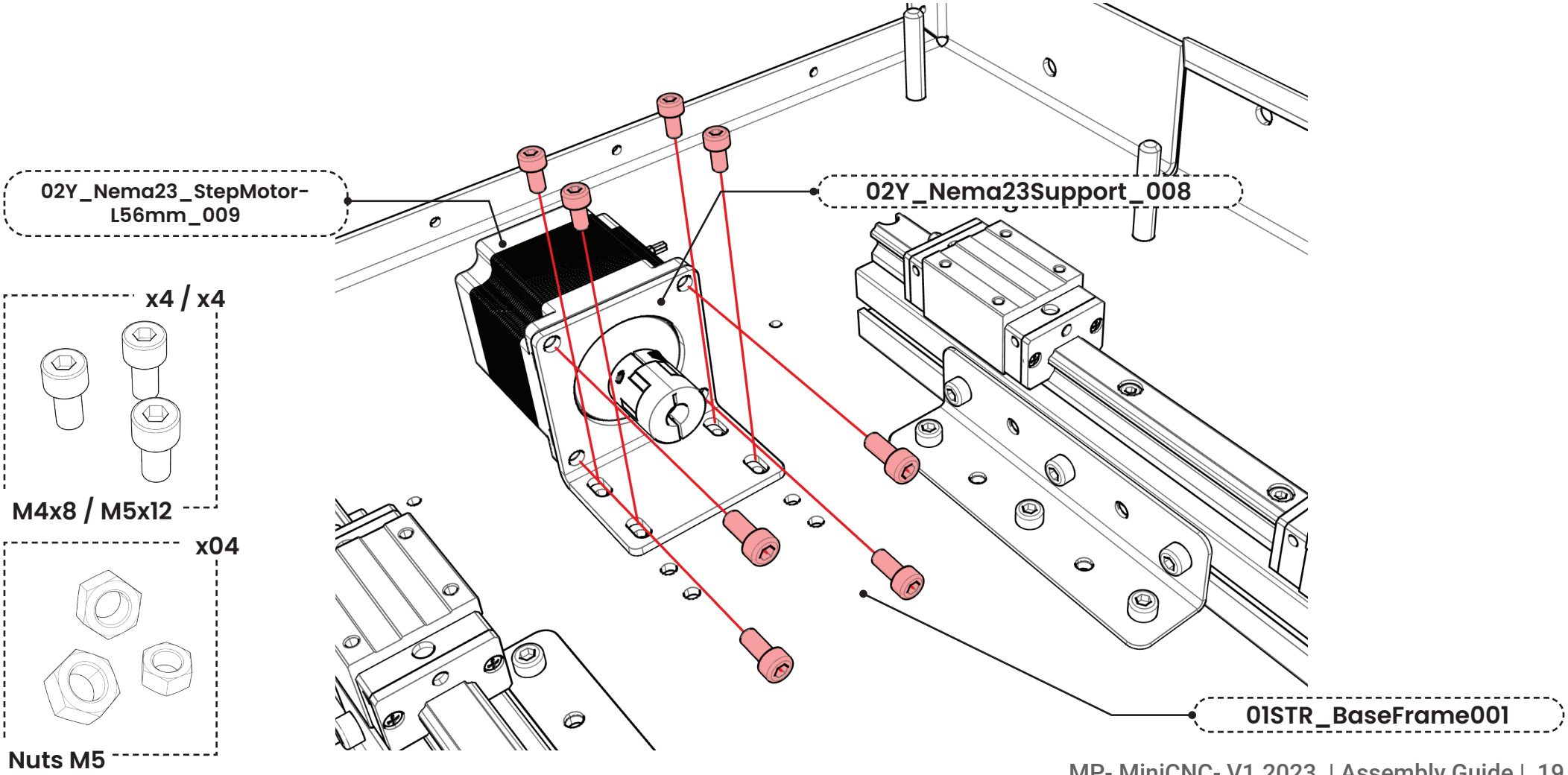

STEP . 08 Mount the Y axis WheelBearings

Install the **02Y_BK1033_WheelBearing_006** inside the ball screw extremities **(02Y_SFU1204Nut _003)**. Once the bearing is positioned correctly, use the provided mounting hardware (screws, bolts, etc.) to secure it in place. Ensure that the bearing is tightly fastened to prevent any unwanted movement.

Be carefull when using a hammer during assembly. Avoid excessive force, which may lead to damage or misalignment of components

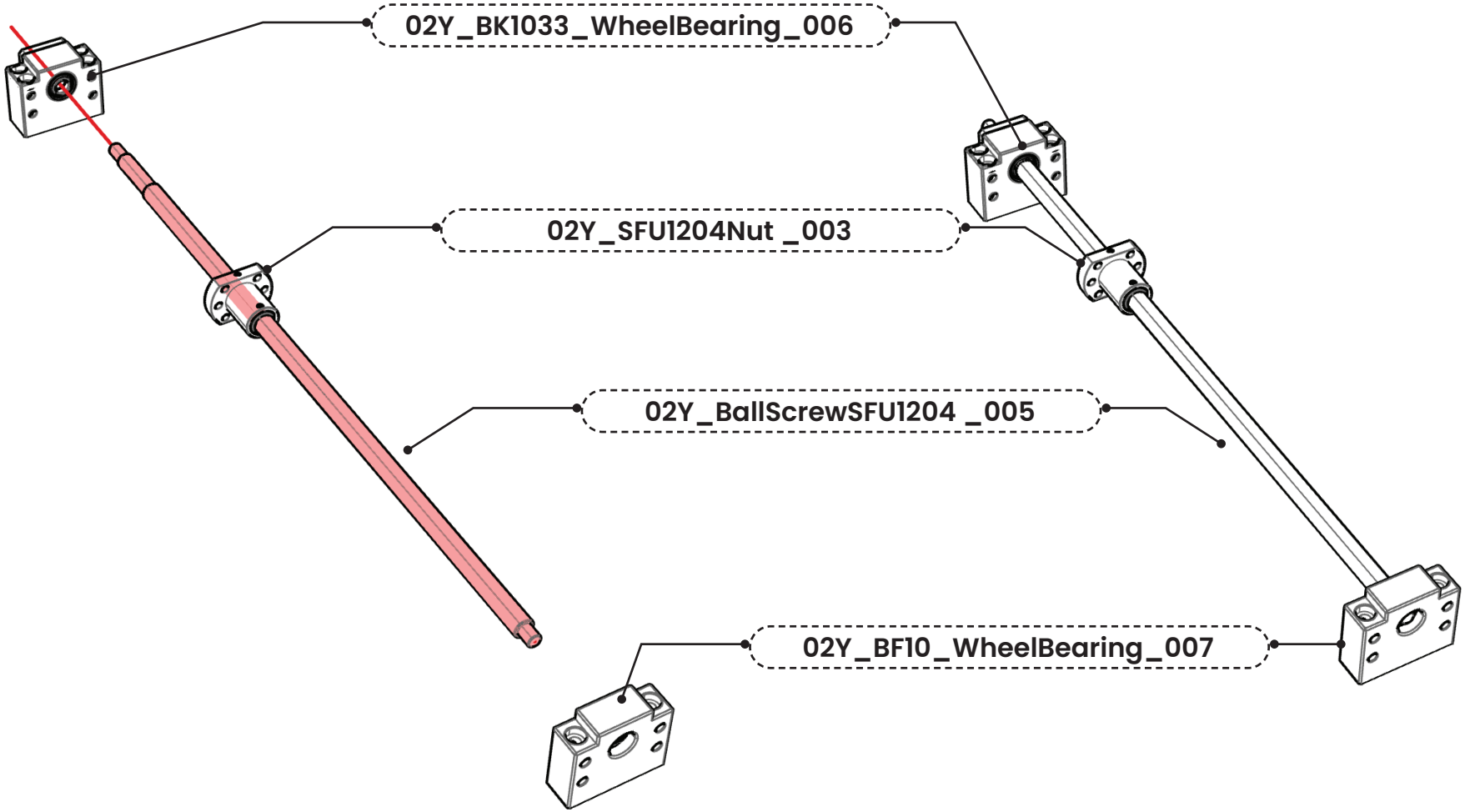

STEP . 09 Place the Y axis WheelBearings

Use The **M6x40** to securely fasten the **Y axis WheelBearings Assembly** onto the specified holes of **BaseFrame001**.
Tighten the set screws & make sure it sits flush against the motor axis.

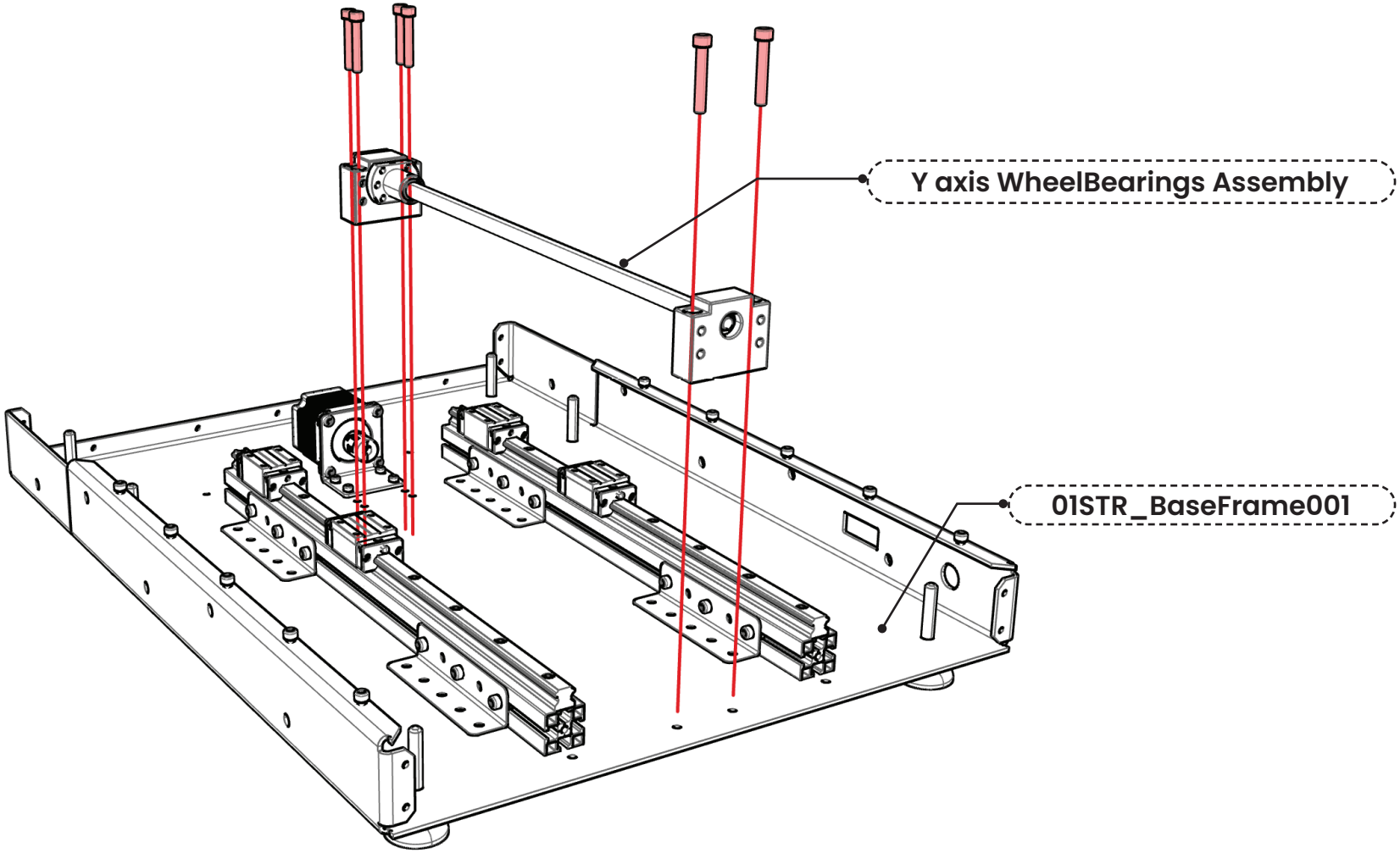

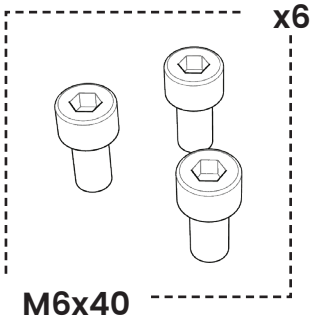

STEP . 10 Install the YcarrigeTrasmisionPlate

Use The **M4x18** to securely fasten the **02Y_YcarrigeTrasmisionPlate_011** to **02Y_SFU1204Nut _003**.
Tighten the set screws & make sure it sits flush.

Avoid excessive force, which may lead to damage or misalignment of components

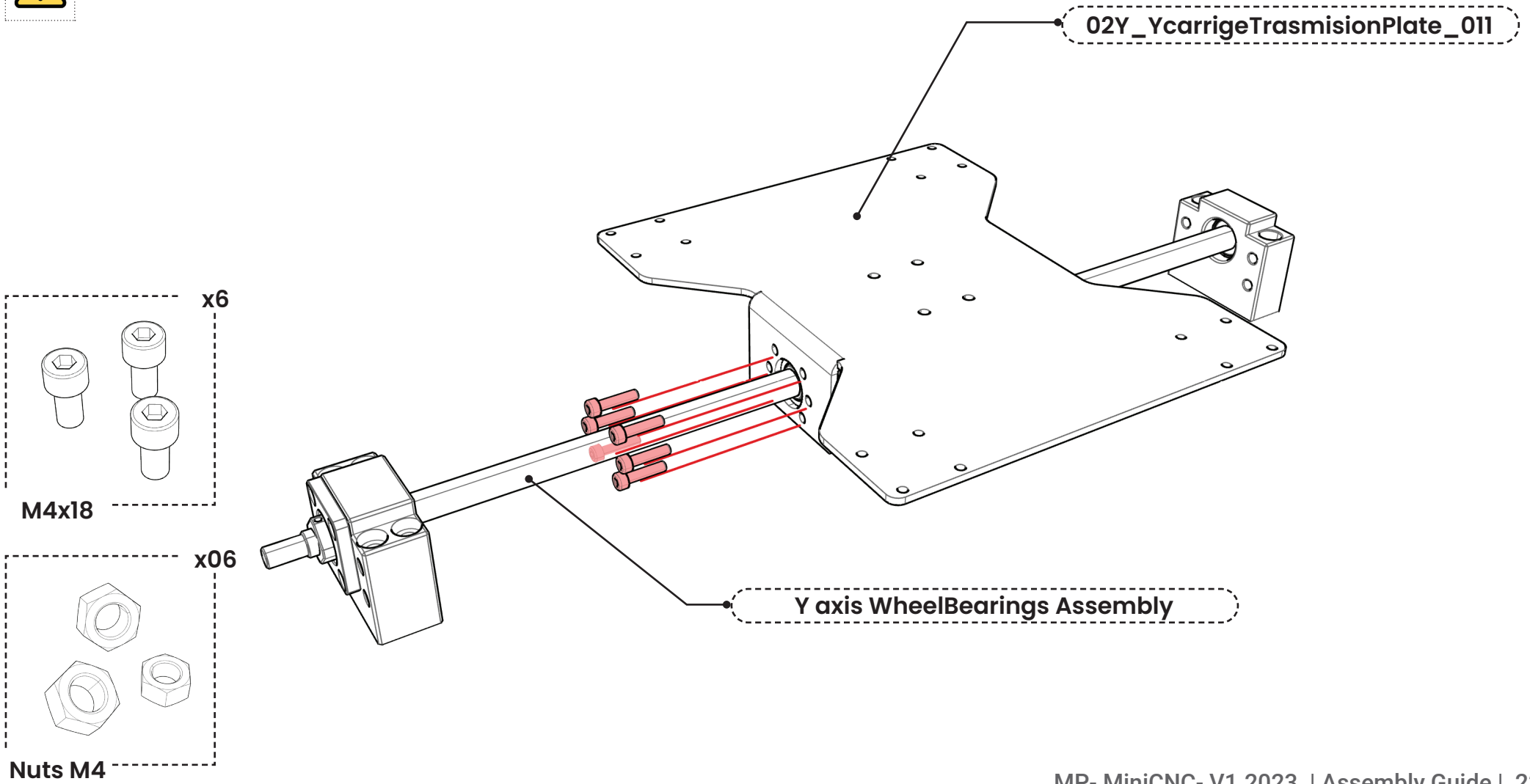

STEP . 11 Install the YcarrigeTrasmisionPlate

Place the **YplateSpacer** on top of the **YcarriageTransmissionPlate**, ensuring proper alignment.
Carefully adjust all **four HGH15 components** to align perfectly with the corresponding holes on the carriage & Spacer.
Use **M4x14** fasteners to securely fasten all **the components together in a stacked configuration**, ensuring a stable and aligned assembly

Do not applying excessive force when tightening the fasteners on the HGH15 components.
Over-tightening may lead to damage or misalignment of the components.

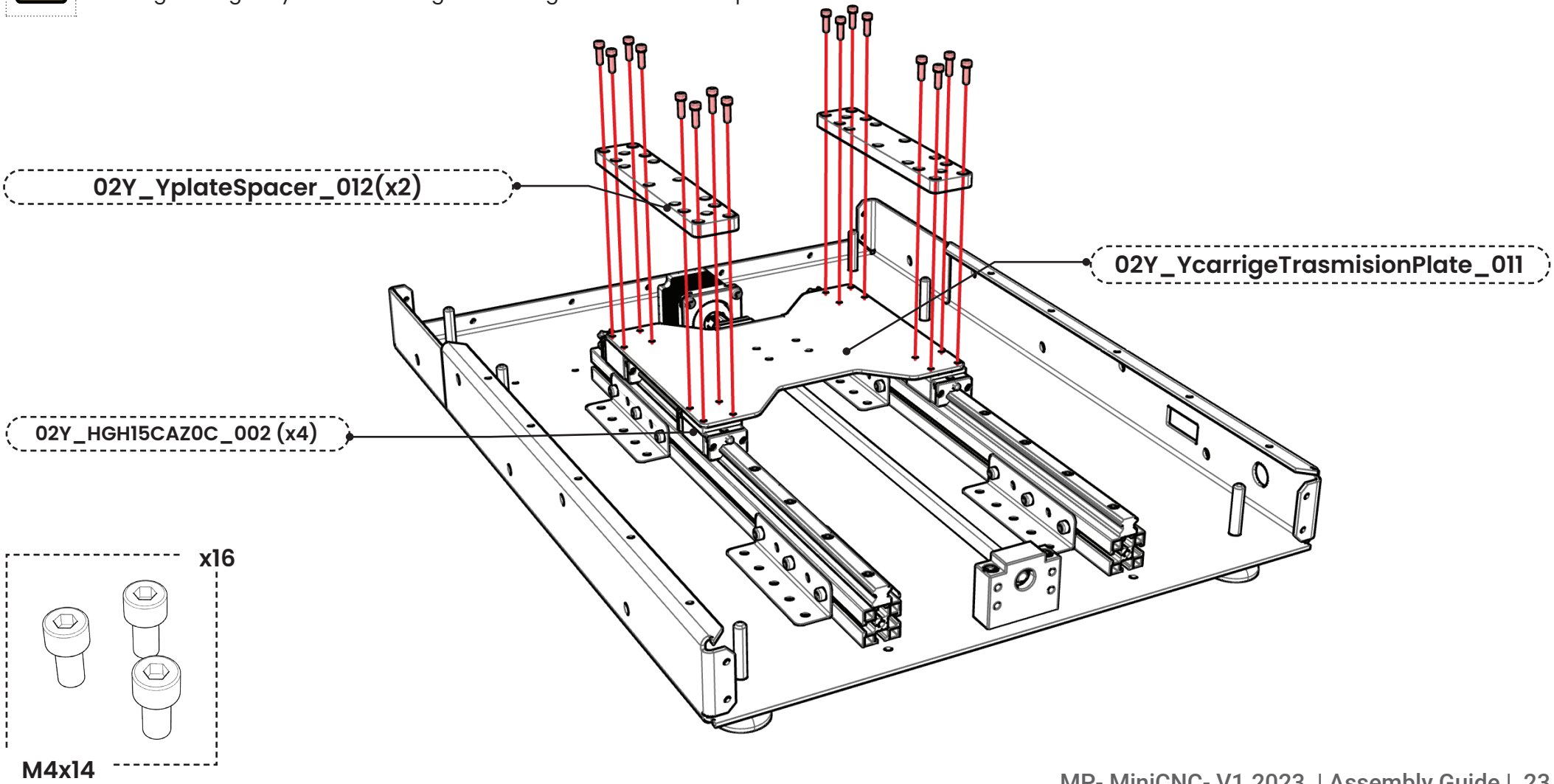

PAUSE FOR A BREAK

Acknowledging the importance of maintaining focus and well-being during the assembly process, take a short break to rest and recharge. Enjoy a brief break before proceeding to the final assembly steps. It's essential to work comfortably and stay alert for the best results.

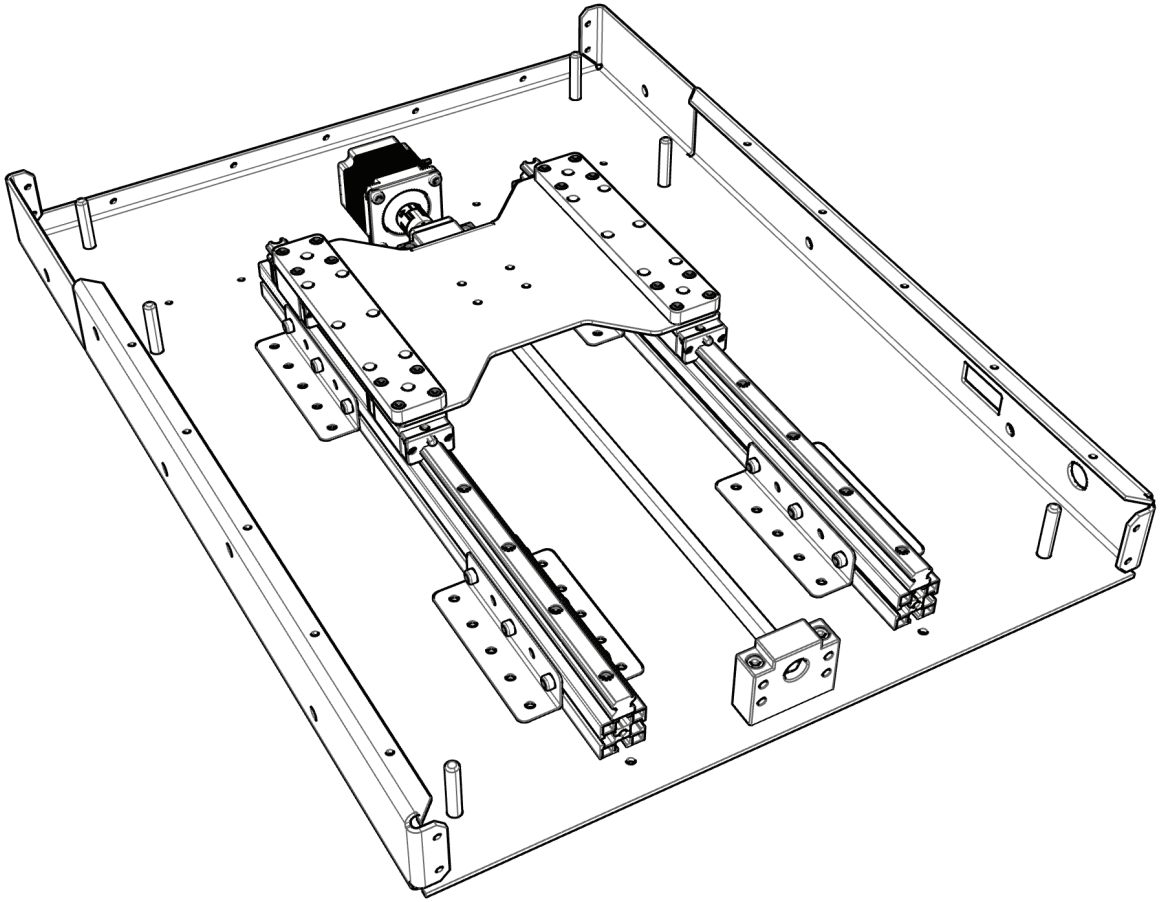

STEP . 12 Mount machine- Right Frame

Use **M8x12** fasteners to securely fasten **01STR_RightFrame005** to **01STR_BaseFrame001**
Tighten the set screws & make sure it sits flush.

Do not applying excessive force when tightening the fasteners.
Over-tightening may lead to damage or misalignment of the components.

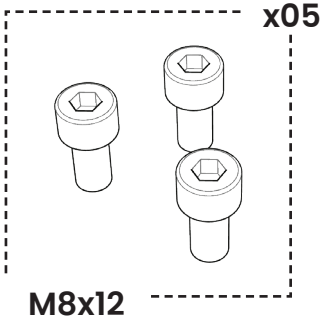

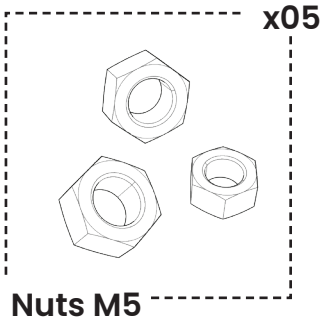

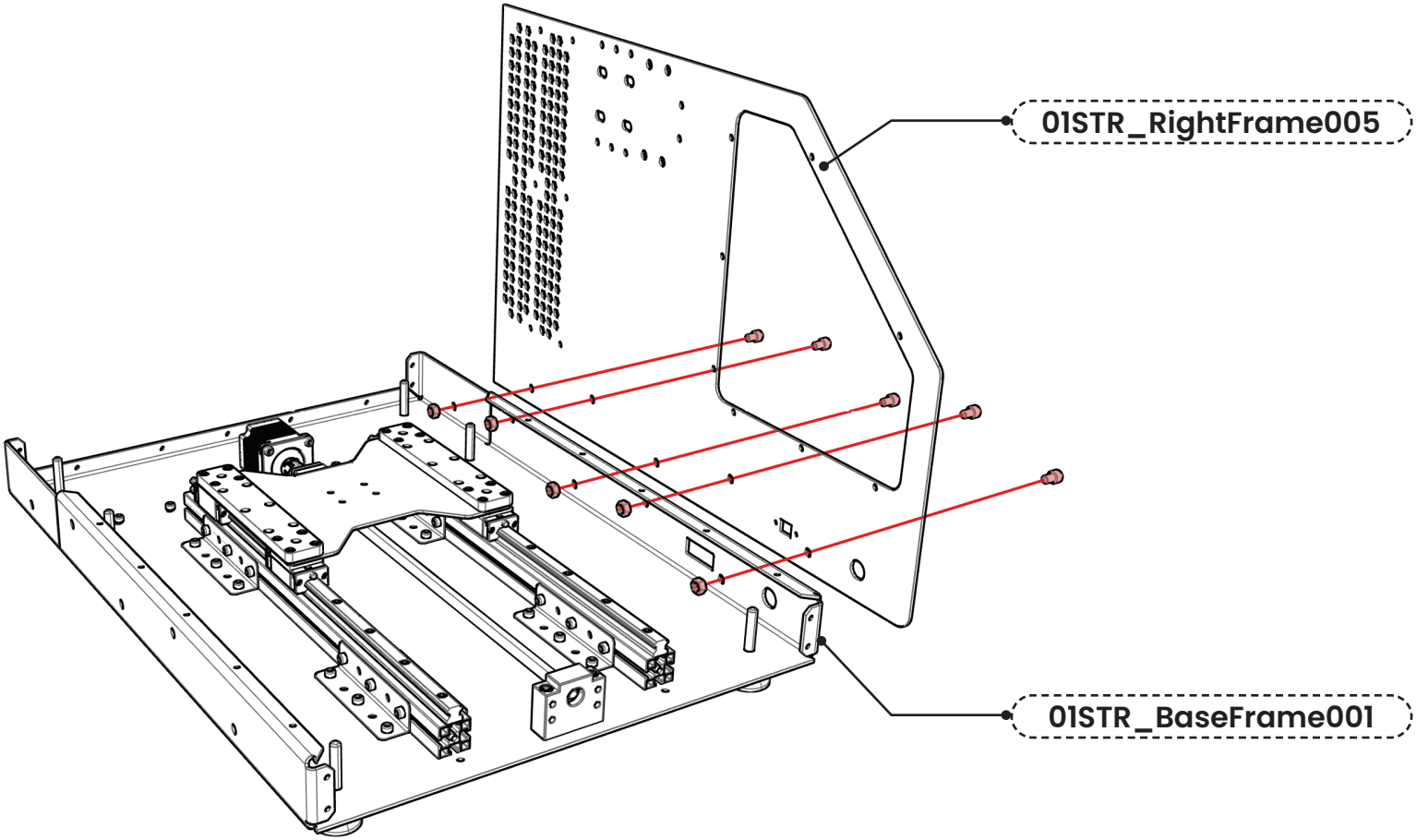

STEP . 13 Mount machine- Left Frame

Use **M8x12** fasteners to securely fasten **01STR_LeftFrame006** to **01STR_BaseFrame001**
Tighten the set screws & make sure it sits flush.

Do not applying excessive force when tightening the fasteners.
Over-tightening may lead to damage or misalignment of the components.

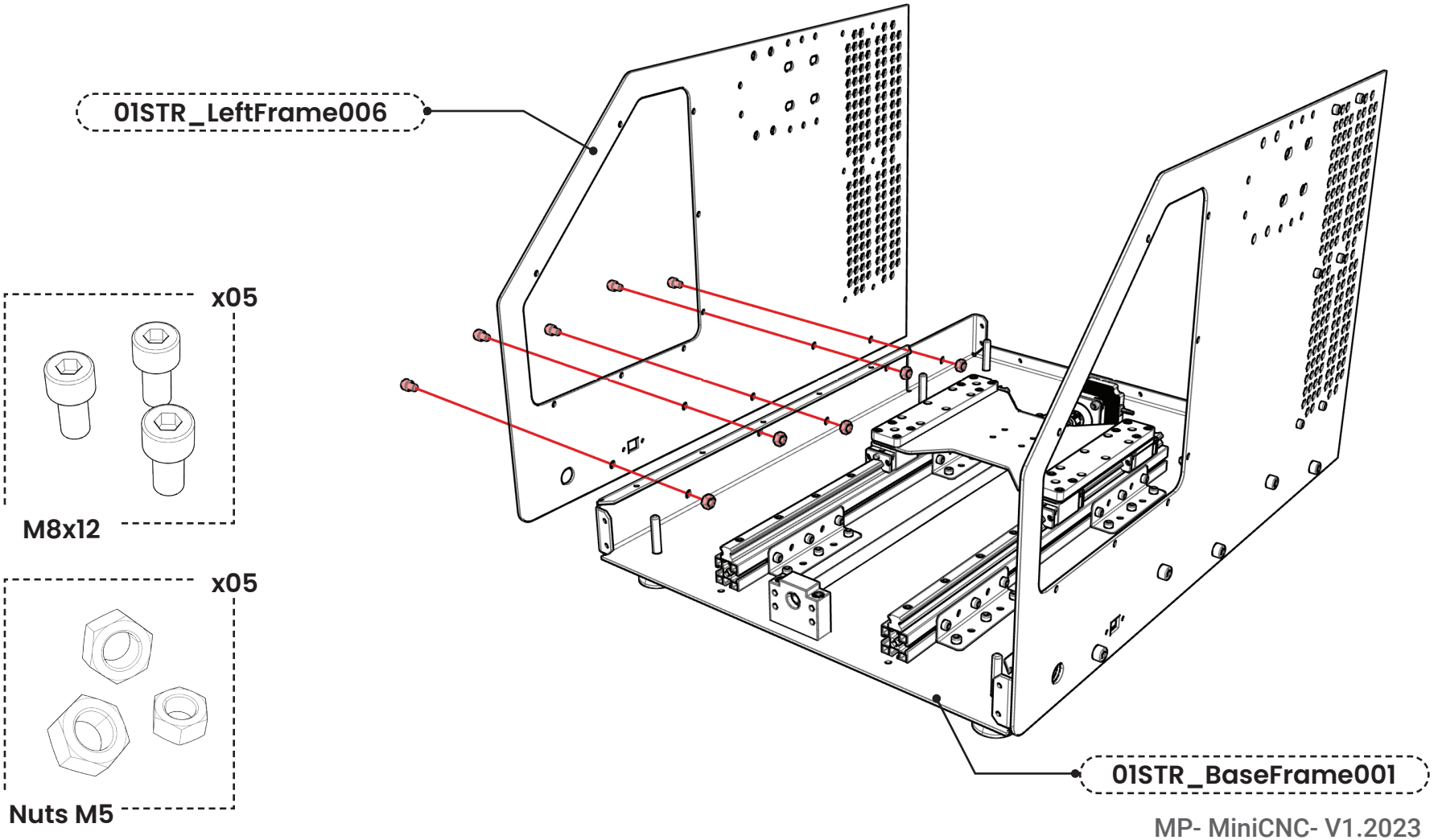

STEP . 14 Mount machine Connect/Power Buttons

Mount **USB Connector & Power Button** onto the **01STR_RightFrame005**
Tighten the set screws & make sure it sits flush.

Ensure that you route the wires of both the **USB connector and power button** to the rear of the machine.
Ensure that the components are firmly attached for proper functionality.

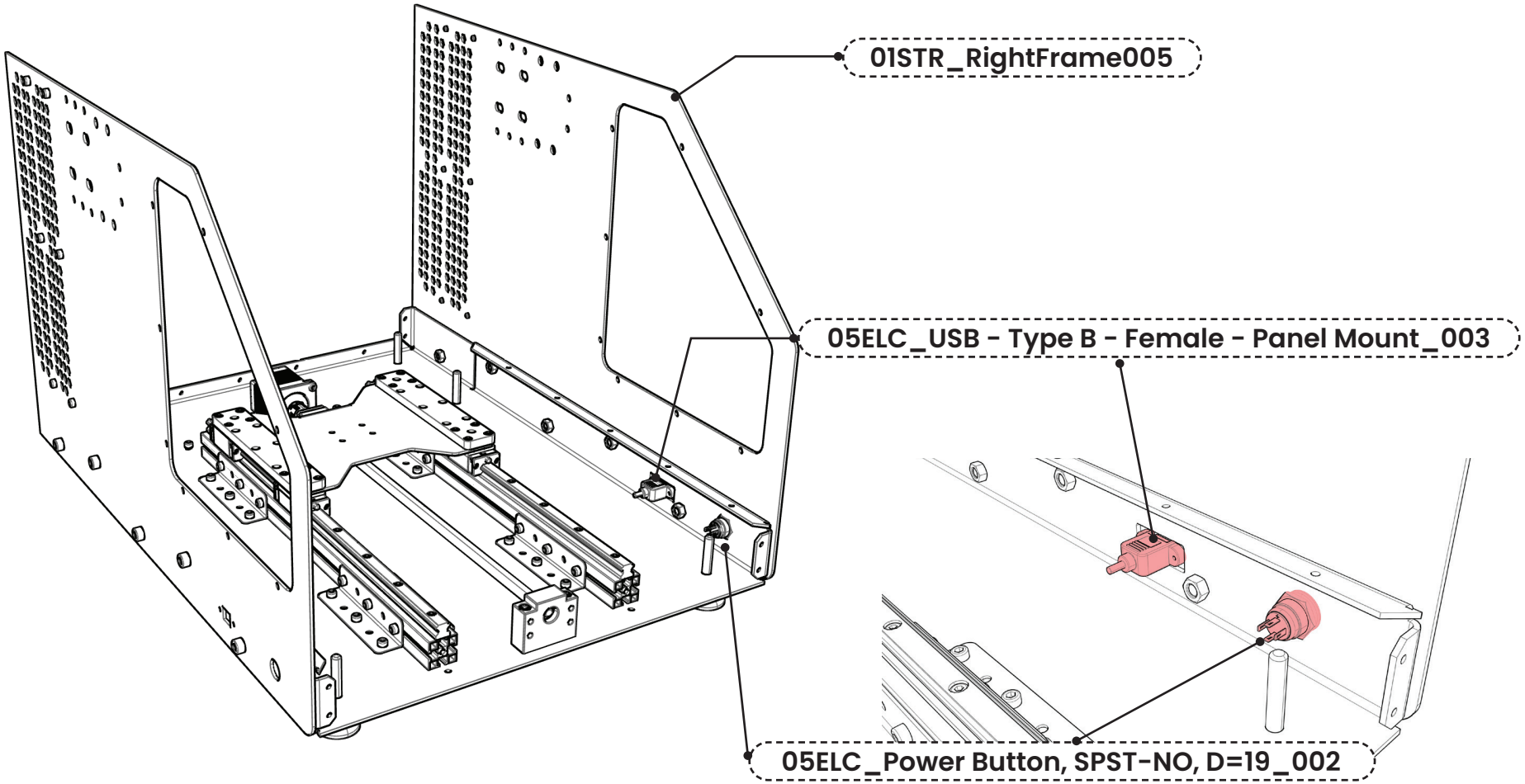

STEP . 15 Mount machine Emergency Buttons

Mount **05ELC_Emergency ButtonSB108825_001** component onto the **01STR_BaseFrame002**
Tighten the set screws & make sure it sits flush.

Ensure that you route the wires to the rear of the machine.
Ensure that the components are firmly attached for proper functionality.

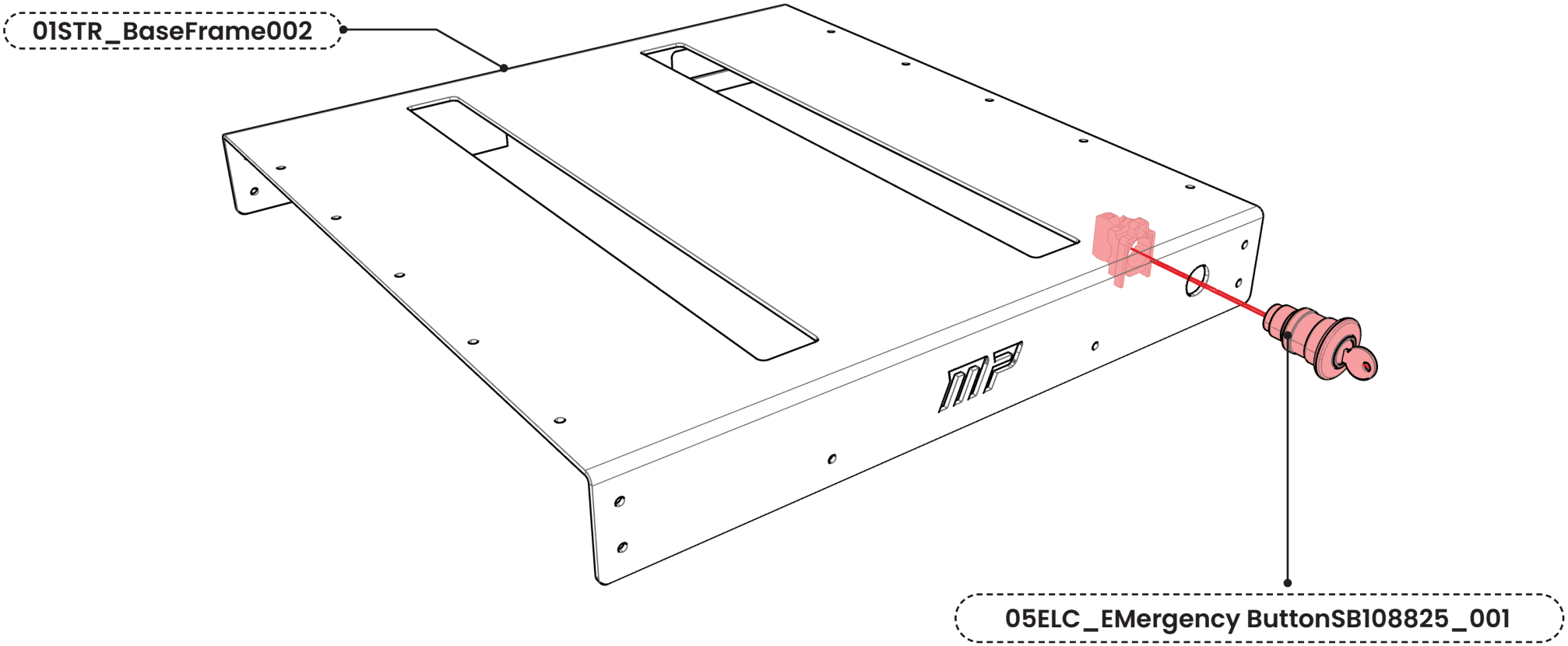

STEP . 16 Mount machine - Upper Base Frame

Use **M5x06** fasteners to securely fasten **01STR_Upper Base Frame002** to **01STR_BaseFrame001**
Tighten the set screws & make sure it sits flush.

Do not applying excessive force when tightening the fasteners.
Over-tightening may lead to damage or misalignment of the components.

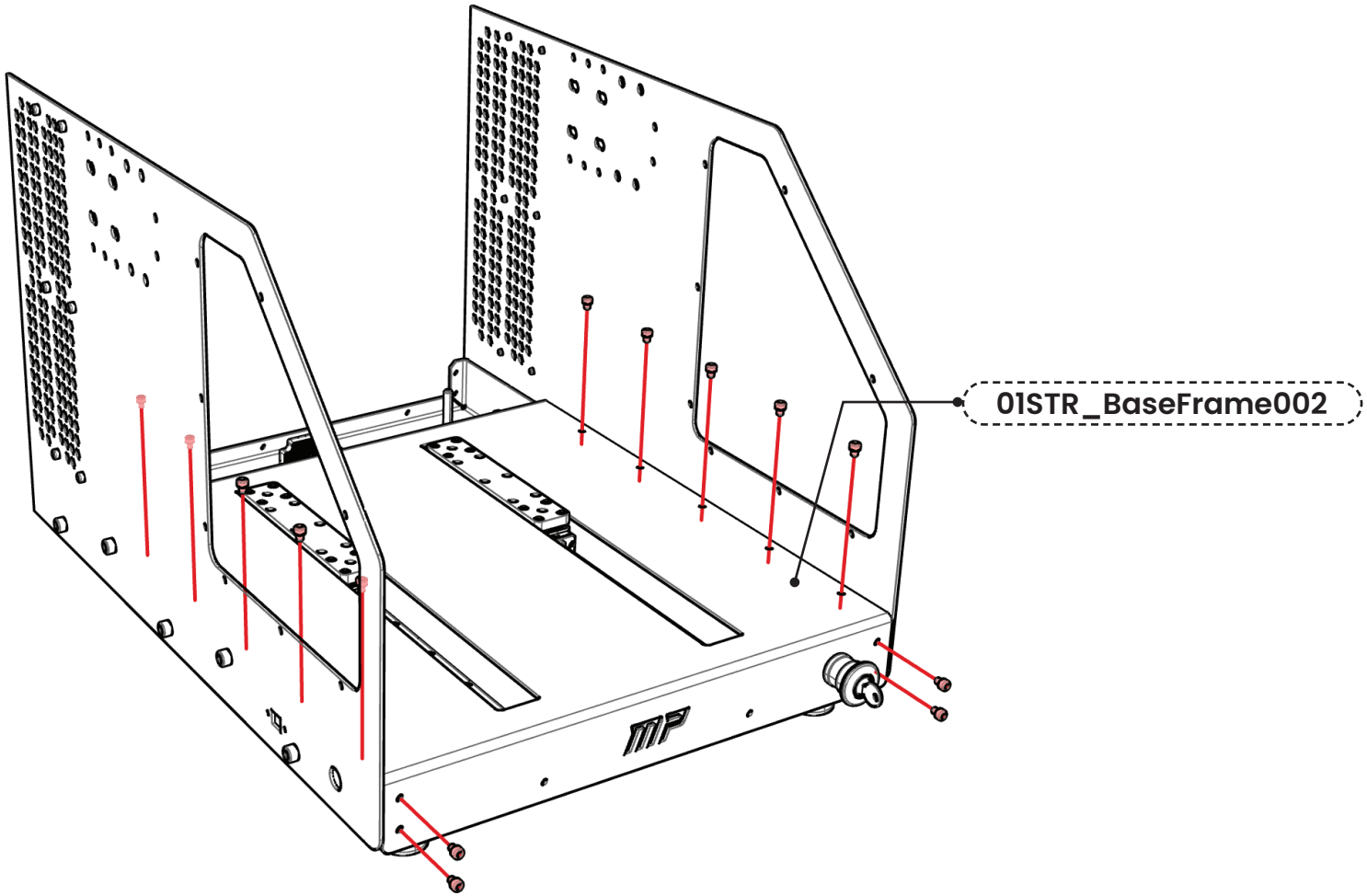

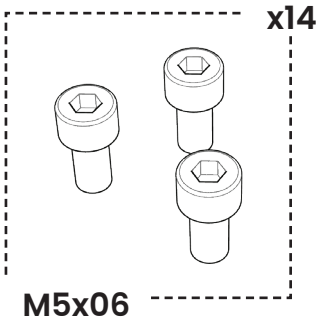

STEP . 17 Mount machine Y Routing plate

Use **M8x16** fasteners to securely mount **02Y_YRoutingplate_013** to **02Y_YplateSpacer_012**
Tighten the set screws & make sure it sits flush.

Do not applying excessive force when tightening the fasteners.
Over-tightening may lead to damage or misalignment of the components.

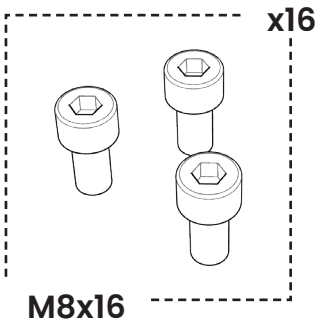

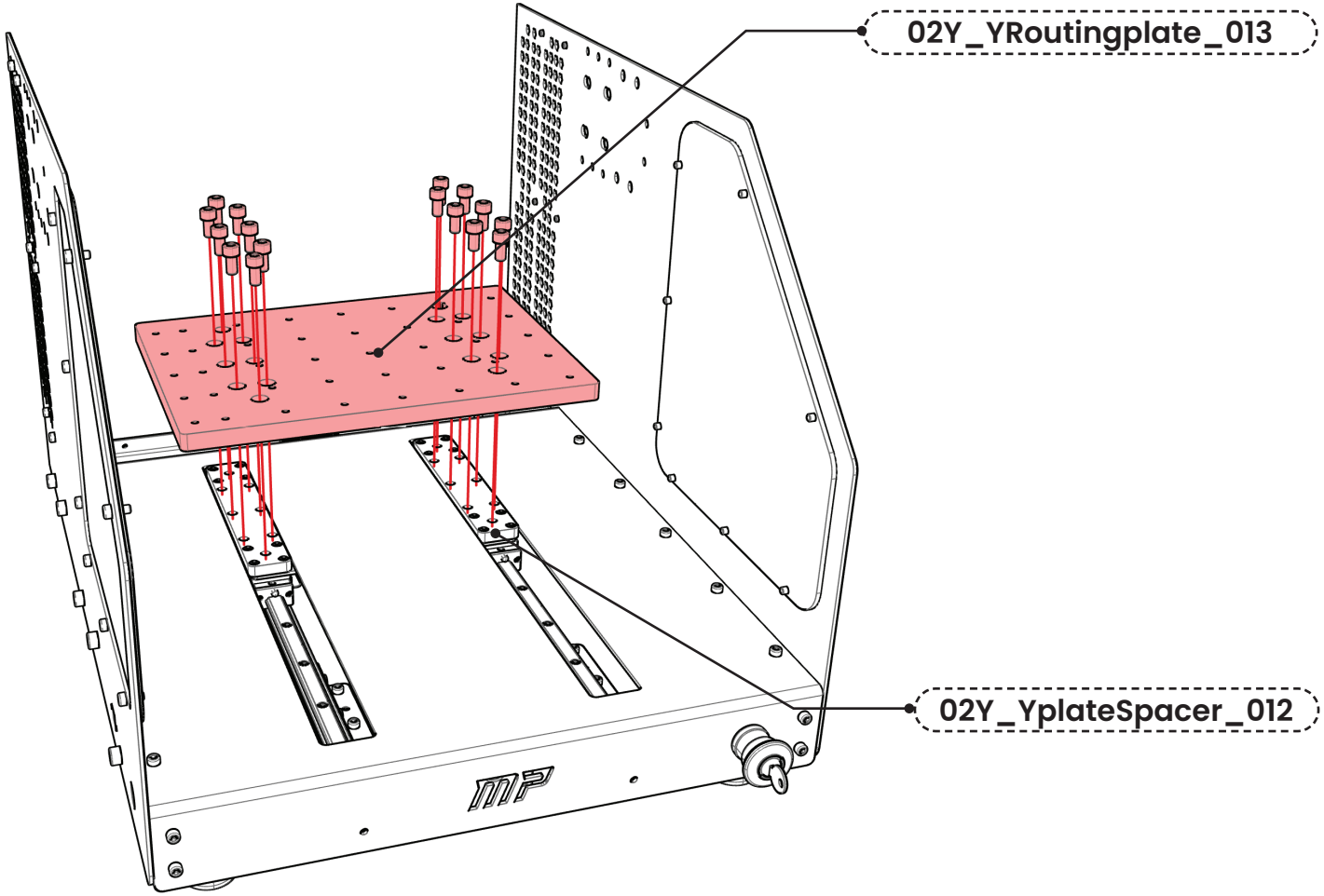

PAUSE FOR A BREAK

Acknowledging the importance of maintaining focus and well-being during the assembly process, take a short break to rest and recharge. Enjoy a brief break before proceeding to the final assembly steps. It's essential to work comfortably and stay alert for the best results.

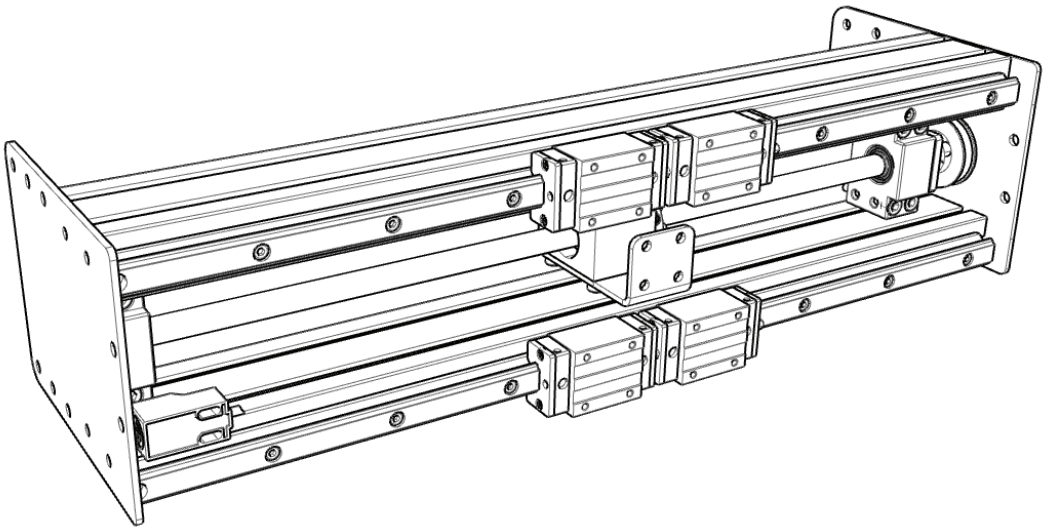

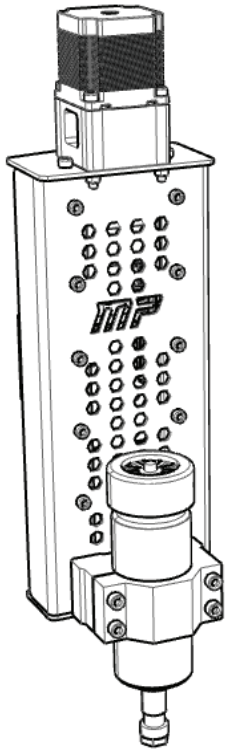

STEP . 18 Mount machine X guiding rails

Insert the **M4x18** through the rails and into the **M4 T-slots**
Carefully Place the X-guiding rails **03X_HGR15R500C_006** on **03X_ALU3060P_004** extrusions.
Carefully tighten the fasteners to securely attach the X-guiding rails to the extrusions

When tightening the fasteners, exercise caution to prevent the **03X_HGH15CAZ0C_005** from sliding out of rails

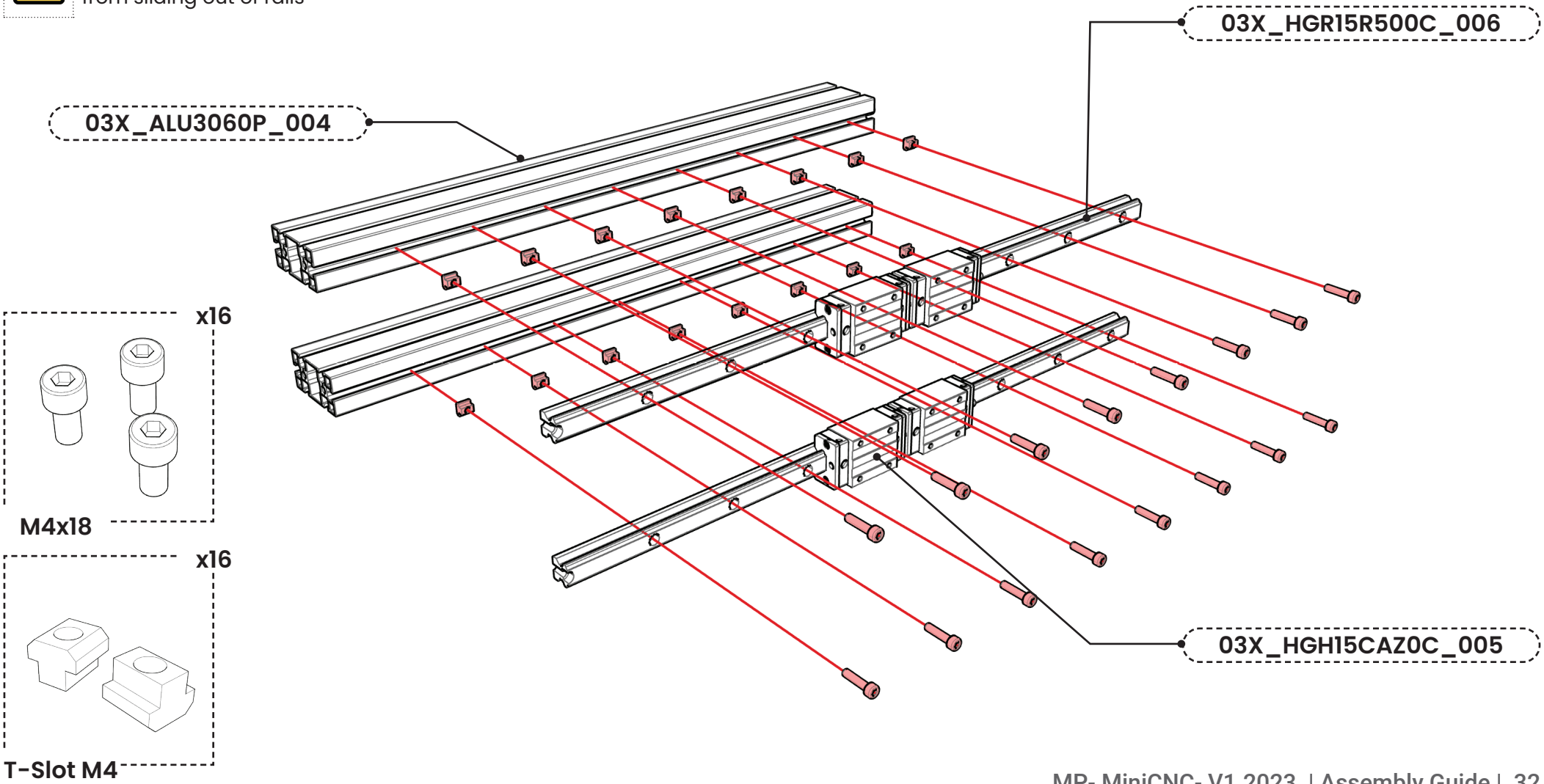

STEP . 19 Mount the X Rear panel Support

Insert the **M5x12** through **03X_Rear panel Support_003** and into the **M5 T-slots**
Mount the **03X_Rear panel Support_003** onto the **03X_ALU3060P_004**
Align the assembled components according to the extrusions profile.

Make sure that both pieces are properly aligned as shown below.
Take your time to ensure precise alignment, as this is crucial for the overall stability and functionality of the assembly.

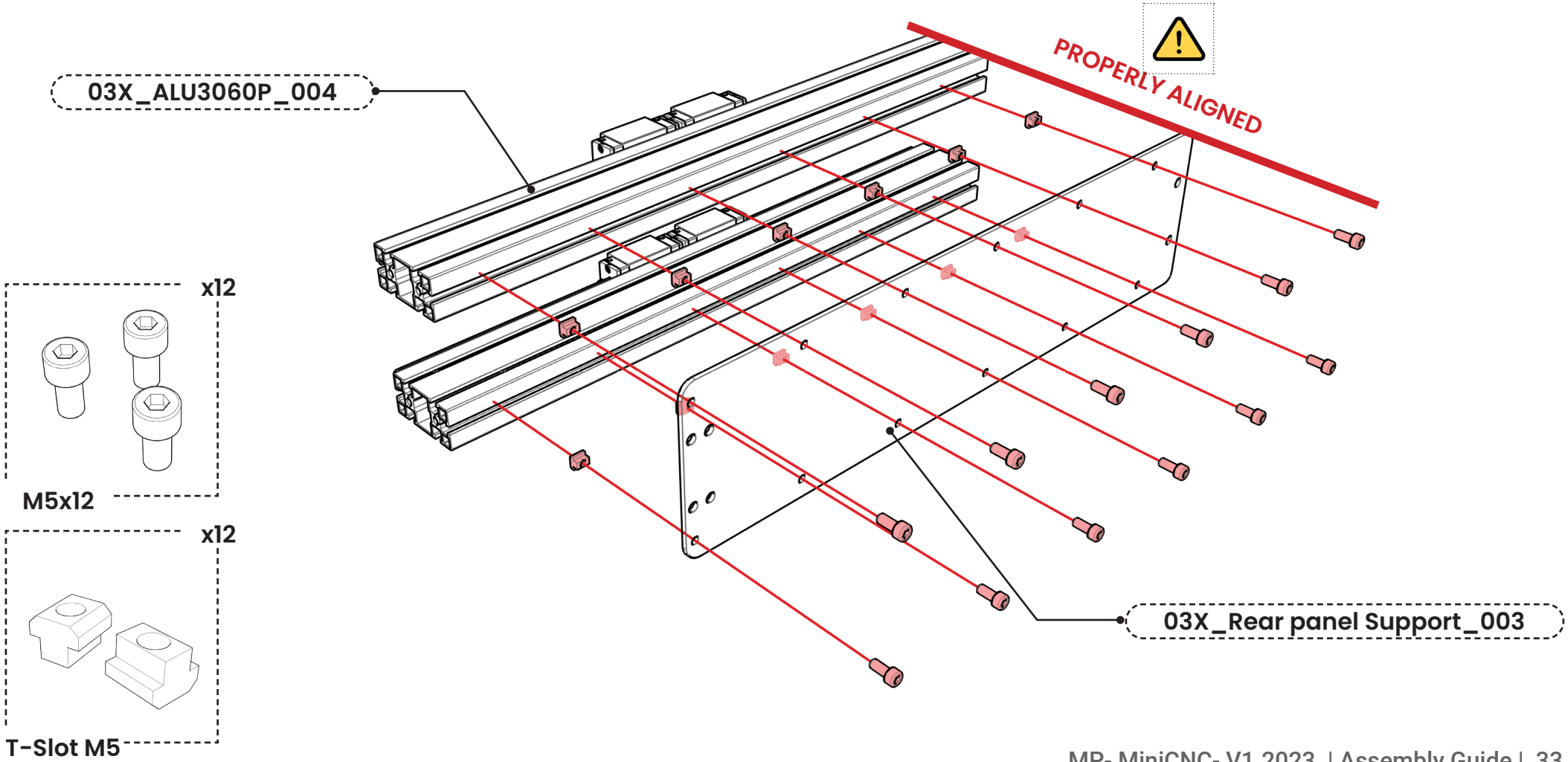

STEP . 20 Mount the X axis WheelBearings (Part1)

Use **M4x16** to secure the **03X_BallScrewSFU1204 _010** onto **03X_SFU1204Nut_Holder _008**
Use **M5x12** to secure **03X_SFU Nut Support_009** inside **SFU1204Nut_Holder**
Install the **WheelBearing** inside the ball screw extremities Then place GT2_60T_8mm on ball screw axis

Be carefull when using a hammer during assembly. Avoid excessive force, which may lead to damage or misalignment of components

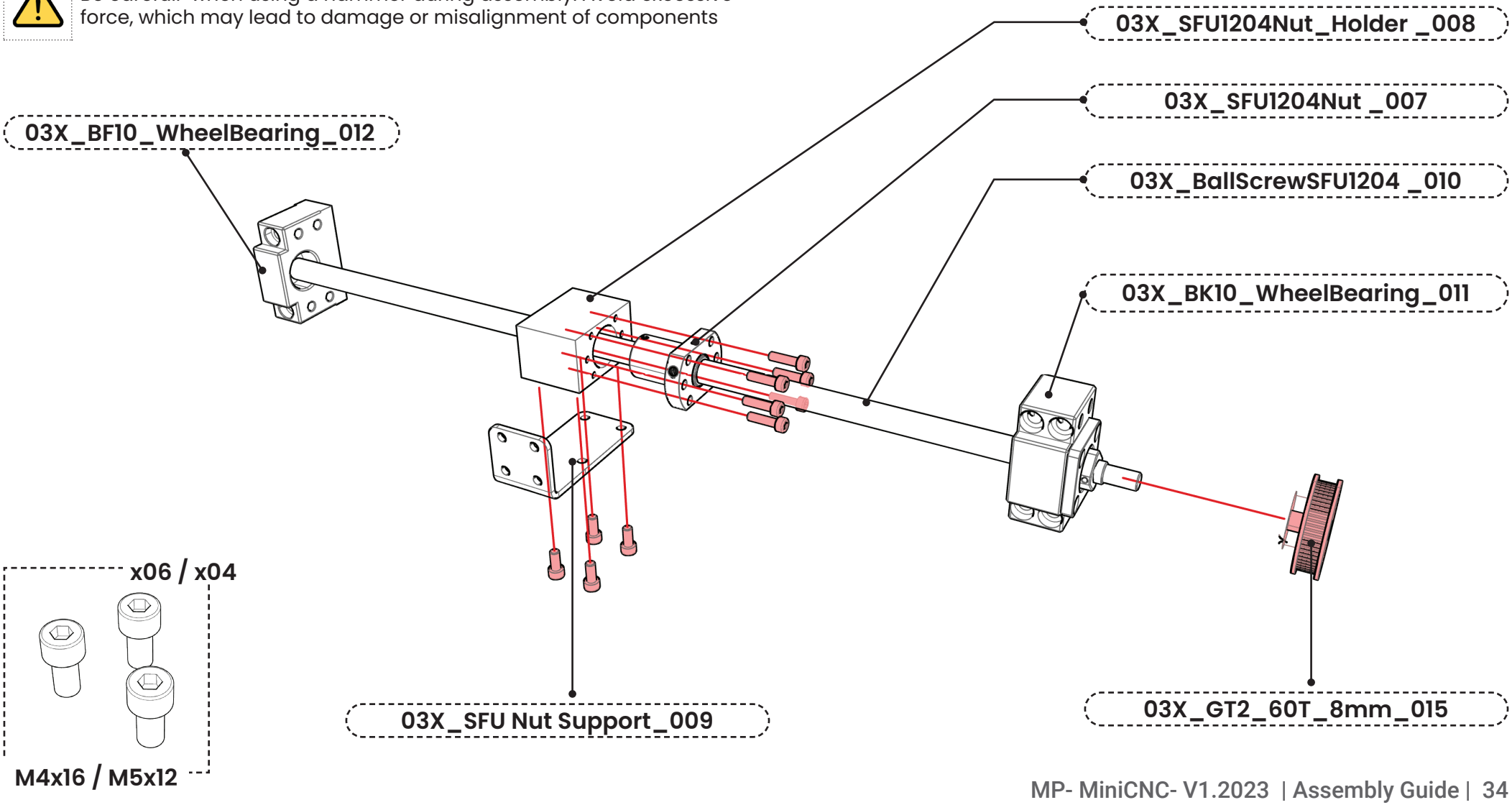

STEP . 21 Mount the X axis WheelBearings (Part2)

Use The **M6x40** to securely fasten the **X axis WheelBearings Assembly** onto the specified holes of **Rear panel Support**.
Tighten the set screws & make sure it sits flush.

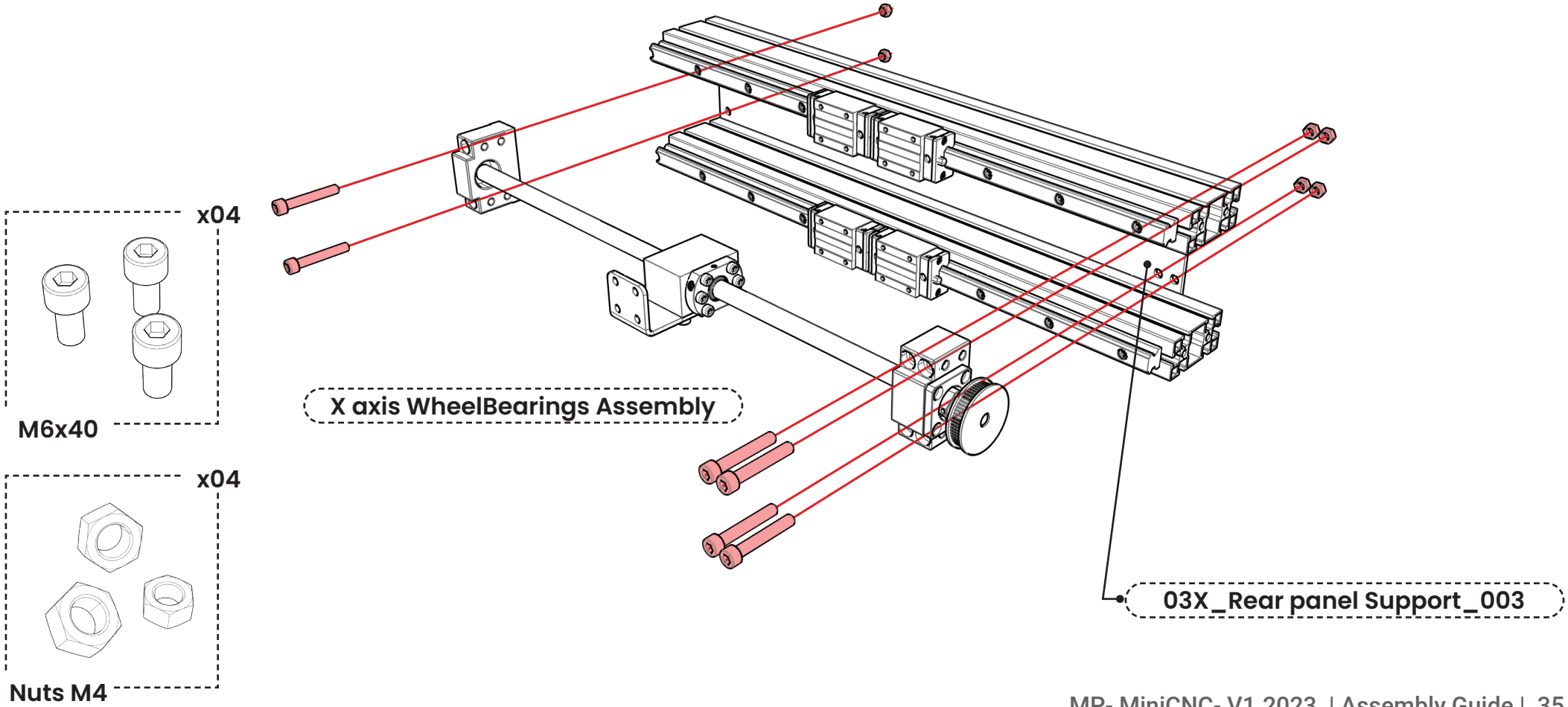

STEP . 22 Mount MGN12H Z axis

Use The **M3x16** to securely fasten the **04Z_MGN12H_006 components** onto the specified holes of **04Z_Carrige plate_001**.
Tighten the set screws & make sure it sits flush.

Be carefull ! Do not slide out the plastic Rail from **04Z_MGN12H_006**

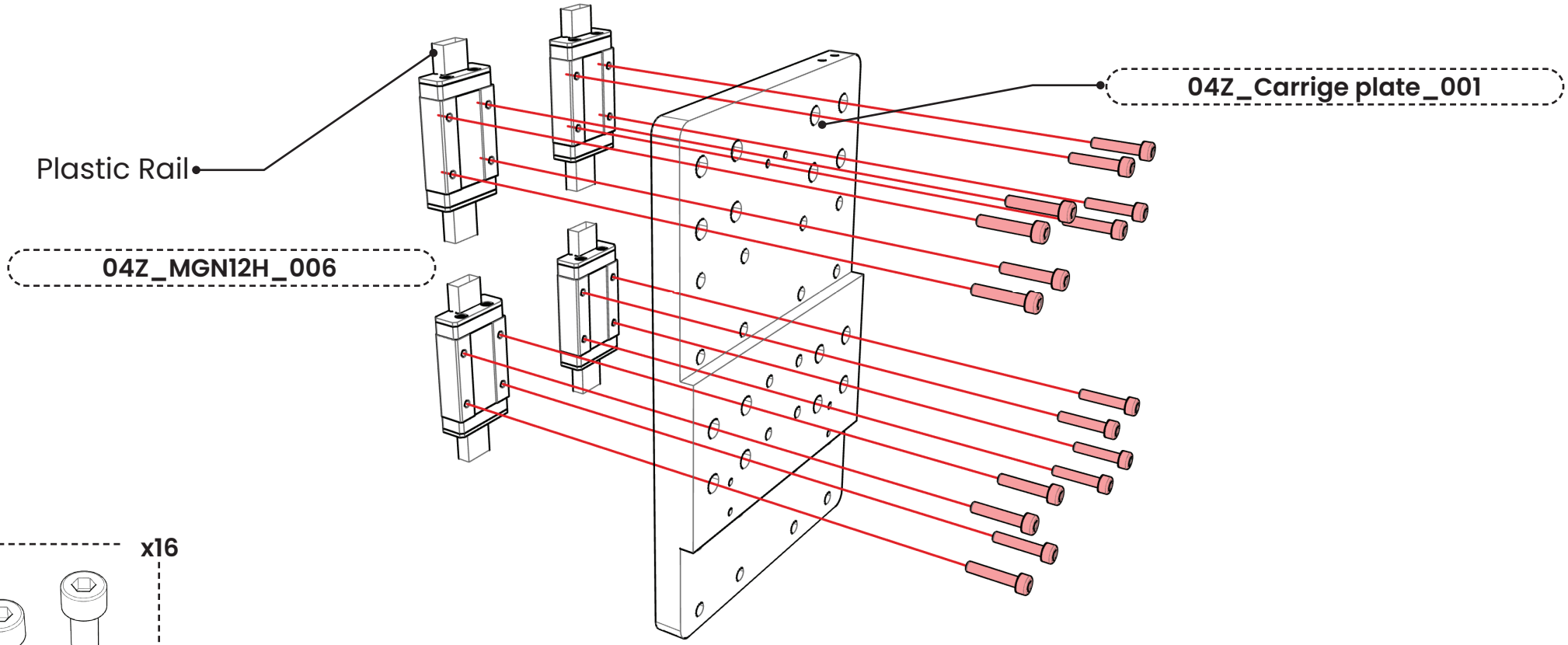

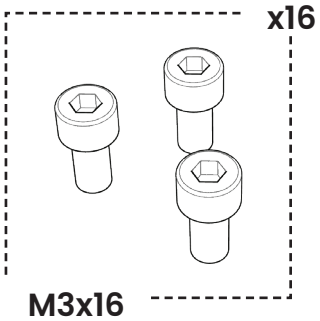

STEP . 23 Mount Z carriage Plate

Use The **M4x12** to securely fasten the **04Z_Carrige plate_001** onto the specified holes of **03X_HGH15CAZ0C_005**.
Align the assembled components according to the extrusions profile.
Tighten the set screws & make sure it sits flush.

Make sure that both pieces are properly aligned as shown below.
Take your time to ensure precise alignment, as this is crucial for the overall stability and functionality of the assembly.

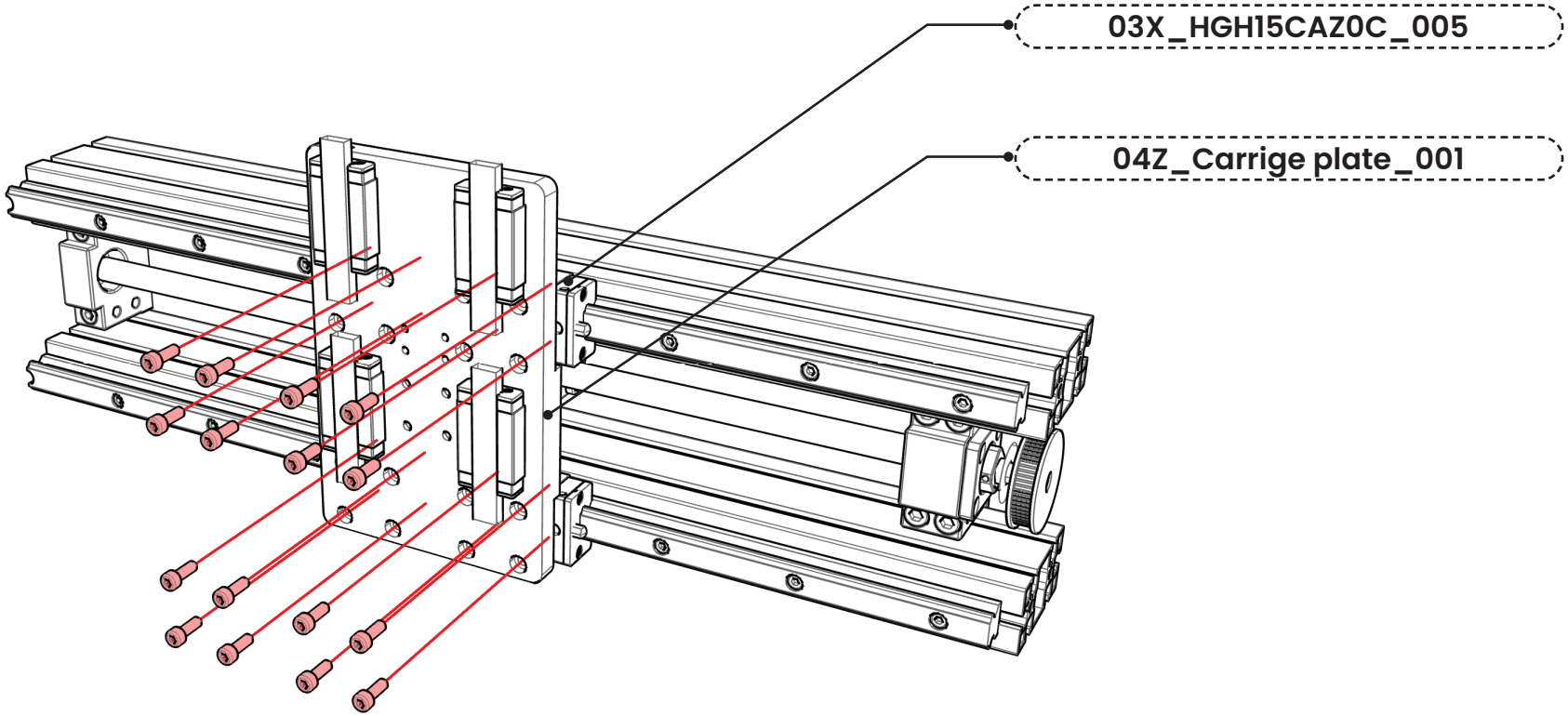

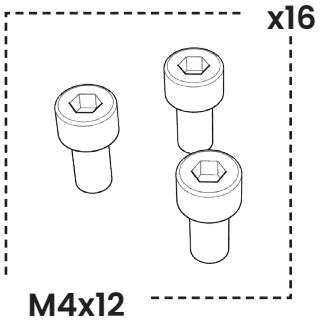

STEP . 24 Mount Z-guiding rails onto the Extrusions

Insert the **M3x08** through the rails and into the **M3 T-slots**
Carefully Place the Y-guiding rails **04Z_MGNR12R300CM_005** on **04Z_ALU2020P_004** the Extrusion.
Carefully tighten the fasteners to securely attach the Z-guiding rails to the extrusion

Make sure that both pieces are properly aligned as shown below.
Take your time to ensure precise alignment, as this is crucial for the overall stability and functionality of the assembly.

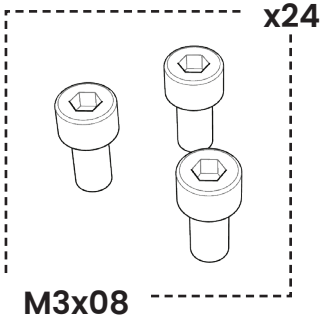

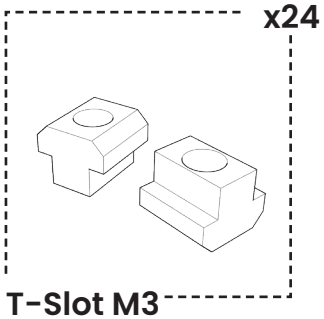

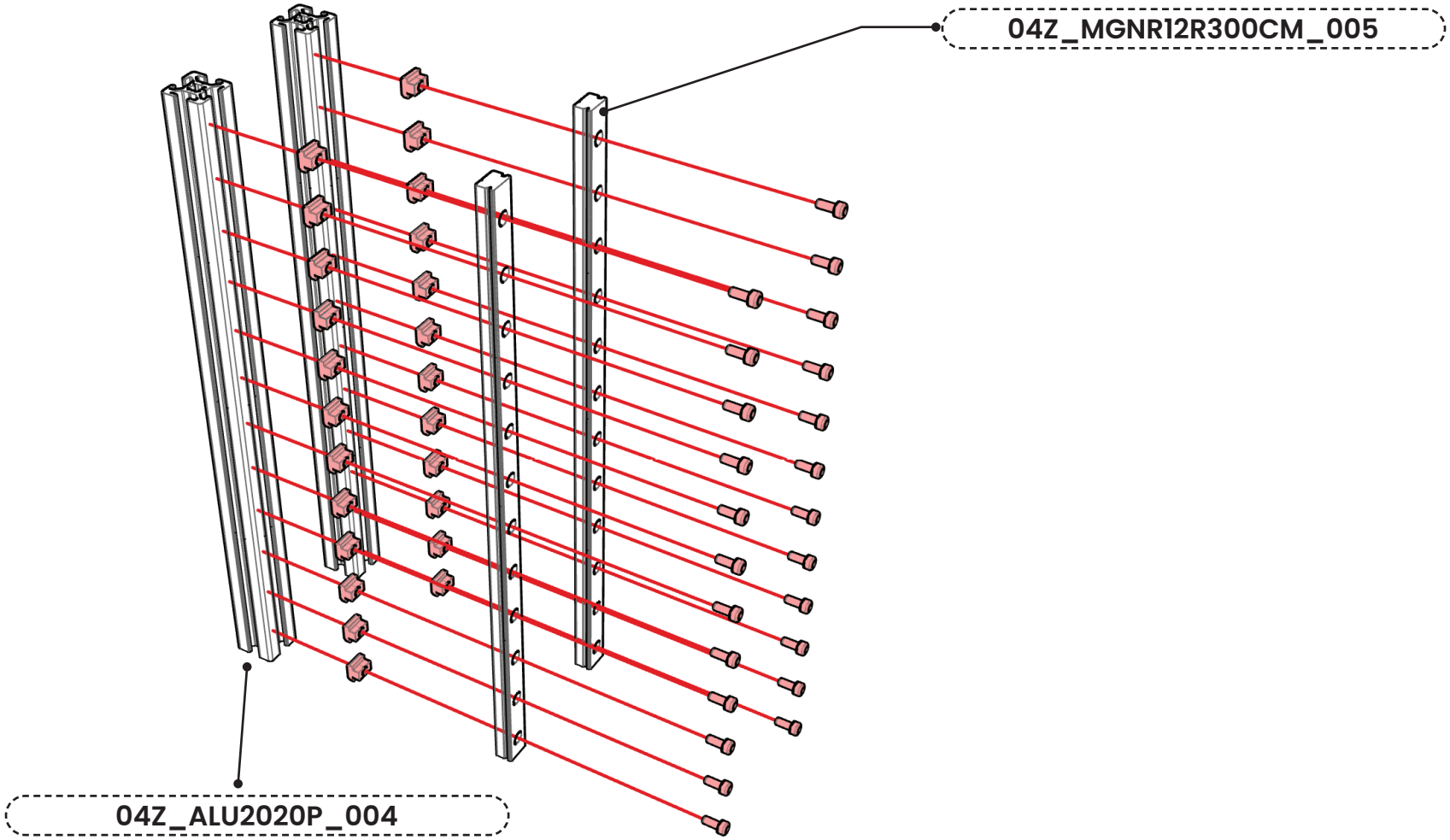

STEP . 25 Slide the Z-Guiding Rails onto the Z-Carriage Plate

Carefully Slide **Z-guiding rails Assembly** in **04Z_MGN12H_006 of the** the Z_Carrige plate.
As you slide, ensure that you progressively push the **plastic rail** in the **MGN12H** component

Exercise caution and handle the Z-Guiding Rails Assembly delicately when sliding it onto the Z-Carriage Plate.
Avoid any sudden or forceful movements to prevent damage to the components.

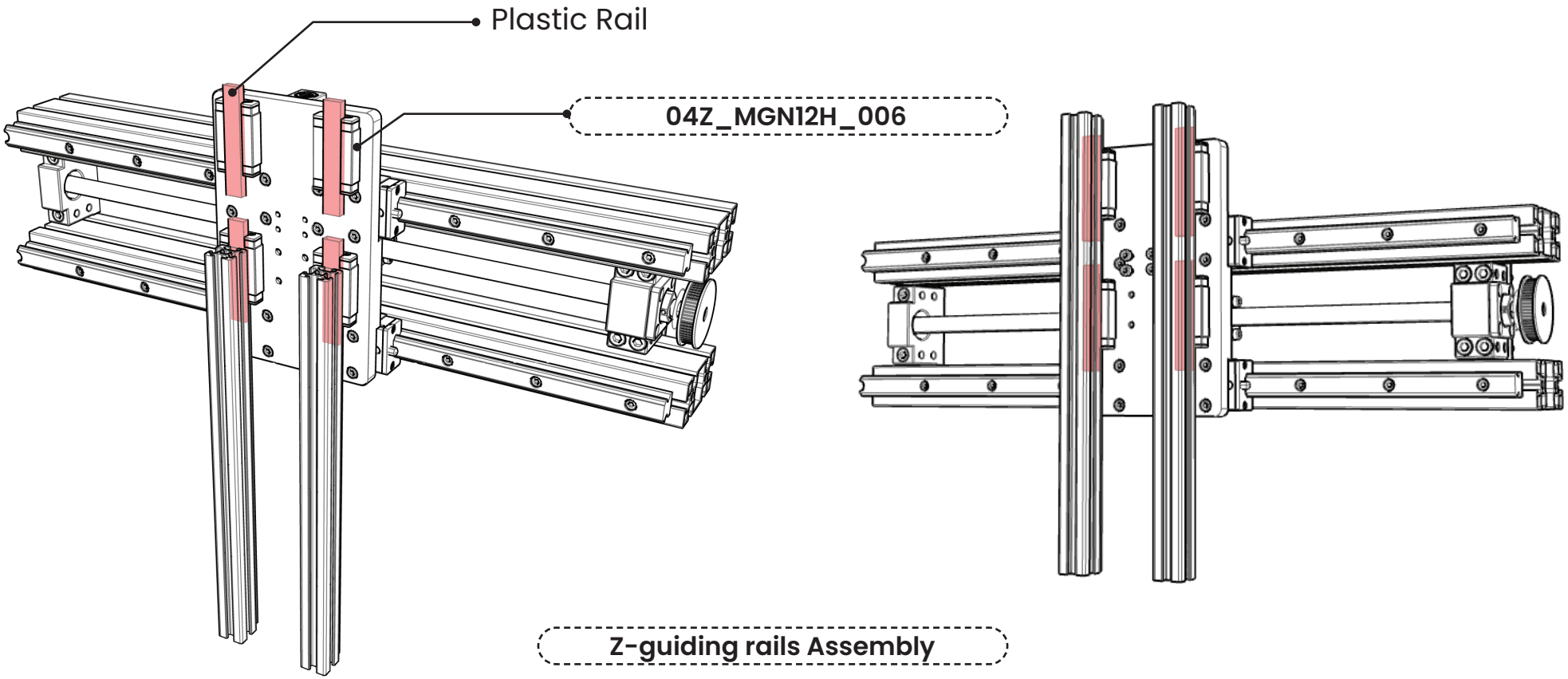

STEP . 26 Mount the SFU Nut Holder onto the Z-Carriage Plate

Use The **M4x12** to securely fasten the **04Z_SFU1204Nut_Holder _008** onto the specified holes of **04Z_Carrige plate_001**.

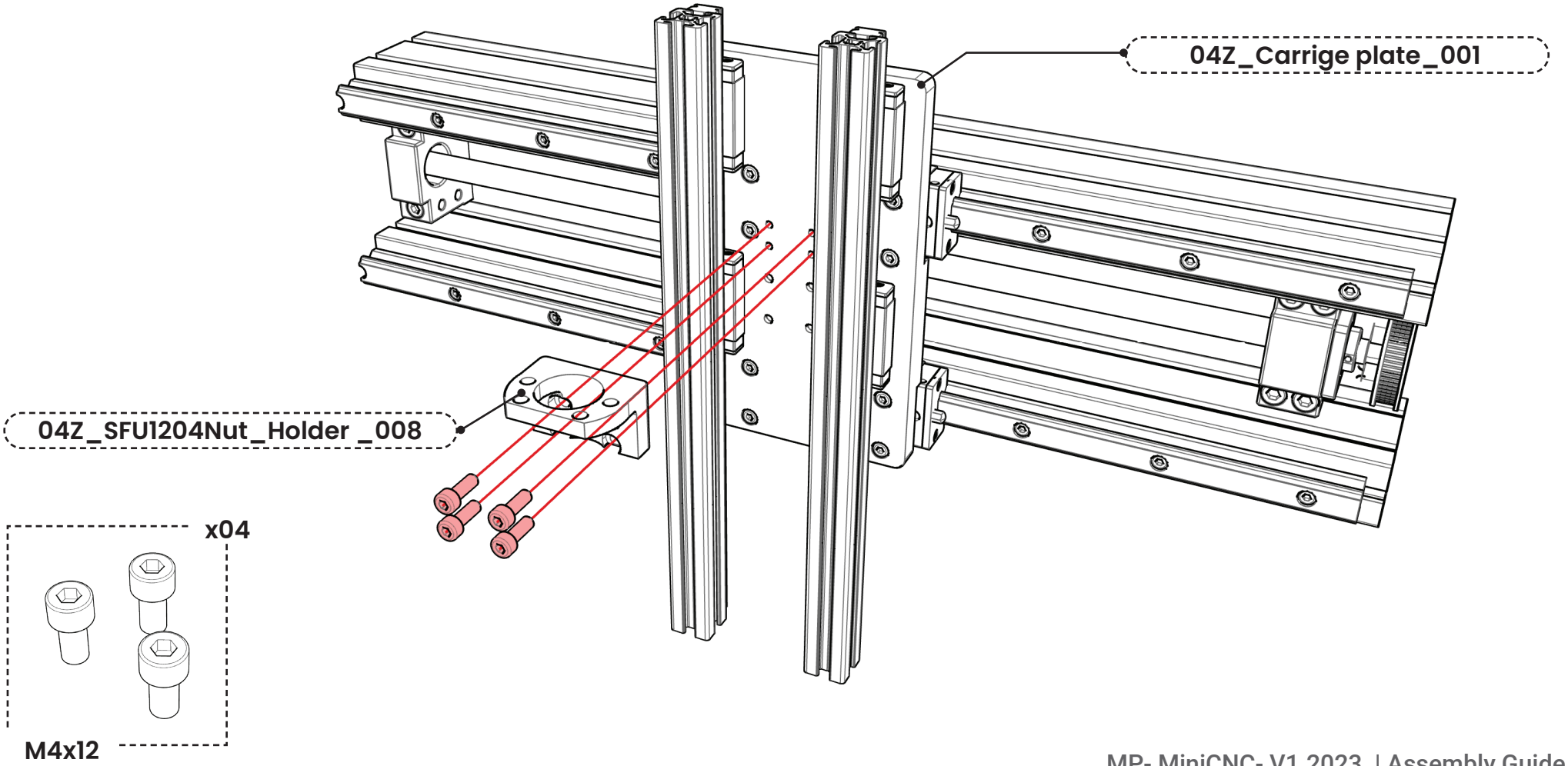

STEP . 27 Mount the SFU Nut Holder onto the Z-Carriage Plate

Use The **M5x16** to securely fasten the **04Z_SFU1204Nut _007** onto the holes of **04Z_SFU1204Nut_Holder _008**
Insert the **M5x10** through the **04Z_Up6000zzBearing Assembly_010** component and into the **M5 T-slots**
Install the **WheelBearing** inside the ball screw extremities

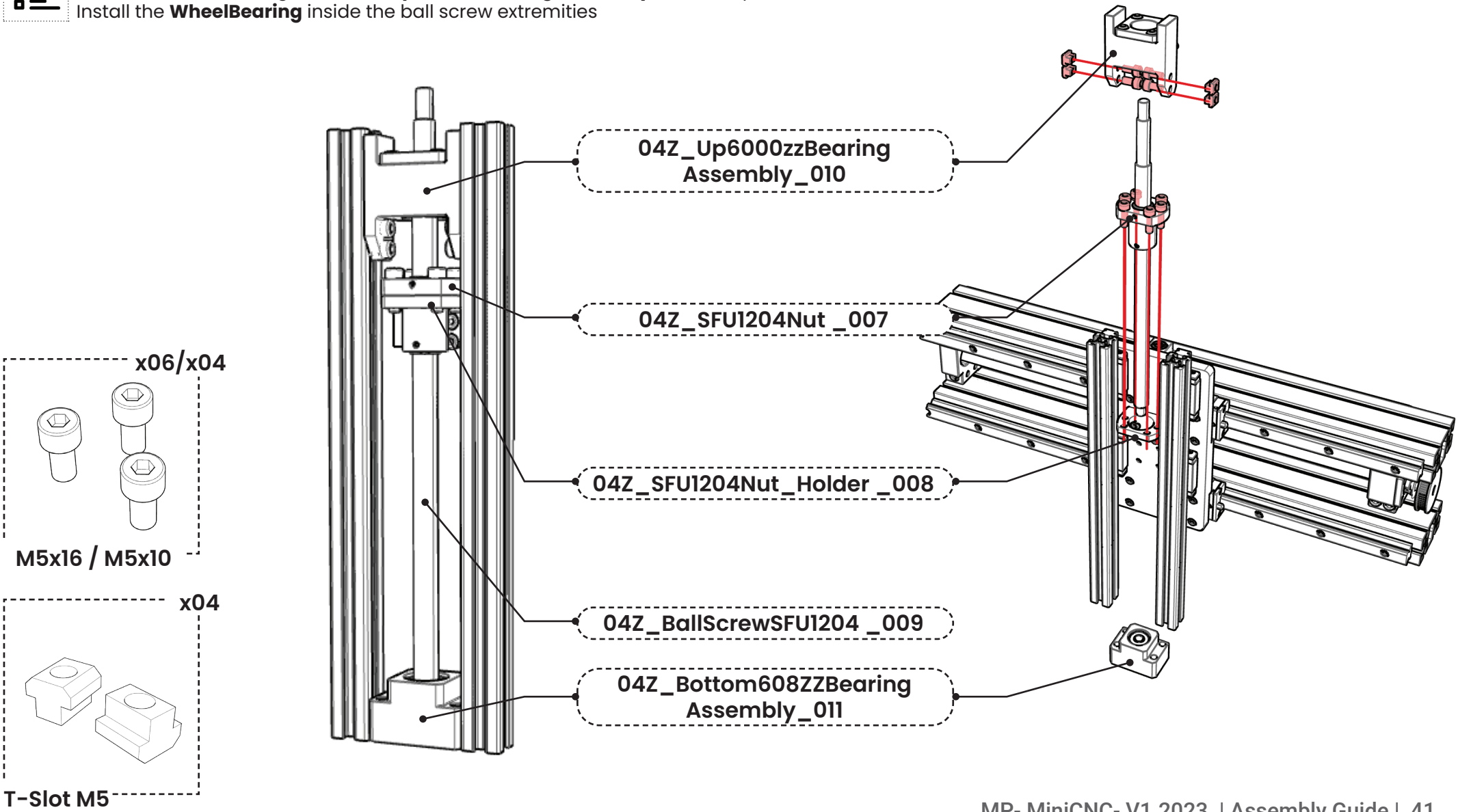

STEP . 28 Install the Z-Support plates on Extrusions extremities

Use The **M5x16** to securely fasten the **04Z_Upper Support Plate_002** onto the holes of **04Z_ALU2020P_004**
Use The **M5x16** to securely fasten the **04Z_BottomSupport Plate_003** onto the holes of **04Z_ALU2020P_004**
Use The **M6x30** to securely fasten the **04Z_Bottom608ZZBearing** onto the holes of **04Z_ALU2020P_004**

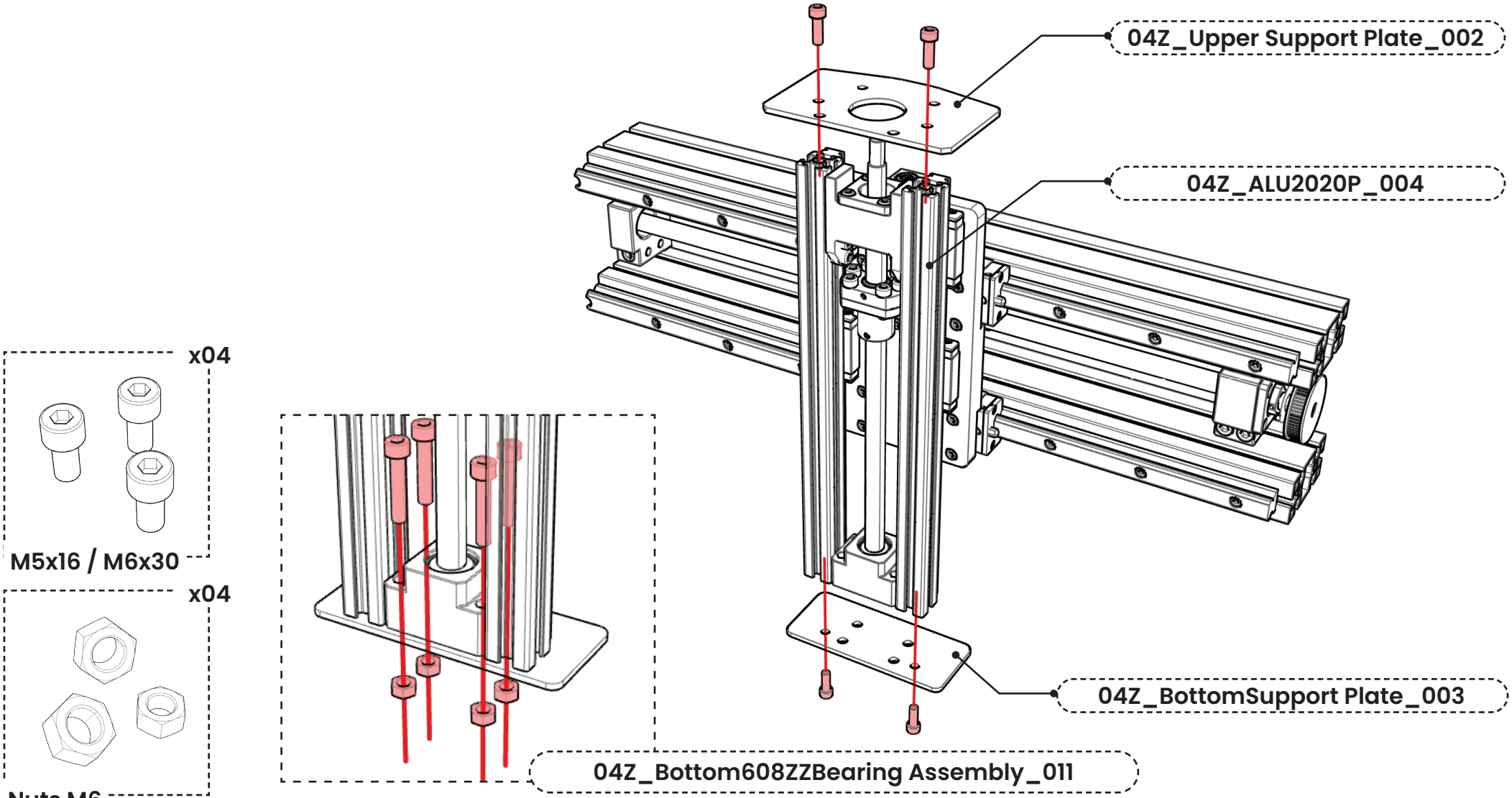

STEP . 29 Install the Z-Stepper motor

Insert the **M5x55** successively through the **04Z_Nema23_StepMotorL56mm_015** , **SpacerSupport, Upper Support Plate** and finally to the **M5 Nuts.**
Tighten the set screws & make sure it sits flush.

Do not forget to place the coupler on the motor shaft, ensuring proper alignment. Secure the coupler on SFu axis

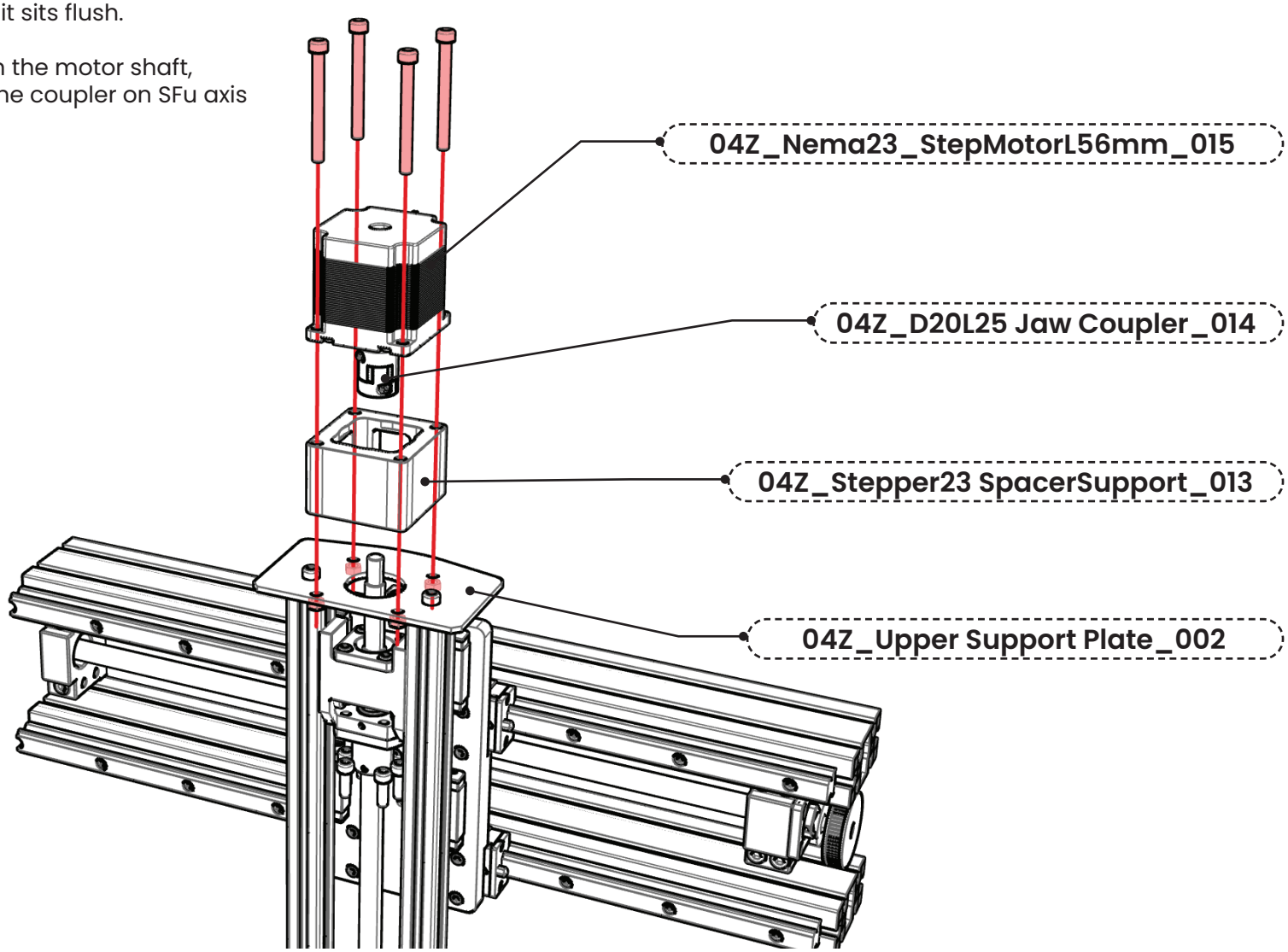

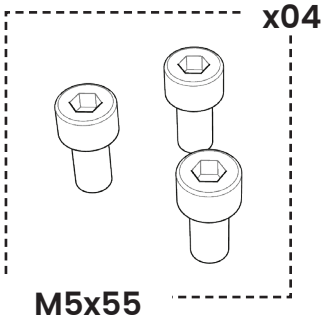

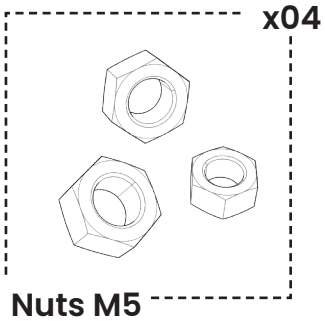

STEP . 30 Install the Z-Cover Front Plate

Use The **M5x08 & M5 nuts** to securely fasten the **04Z_CoverFrontPlate_012** onto **04Z_ALU2020P_004 extrusions**
Tighten the set screws & make sure it sits flush.

Make sure that both pieces are properly aligned as shown below.
Take your time to ensure precise alignment, as this is crucial for the overall stability and functionality of the assembly.

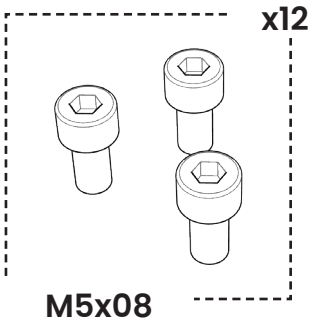

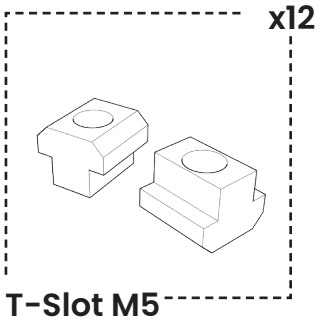

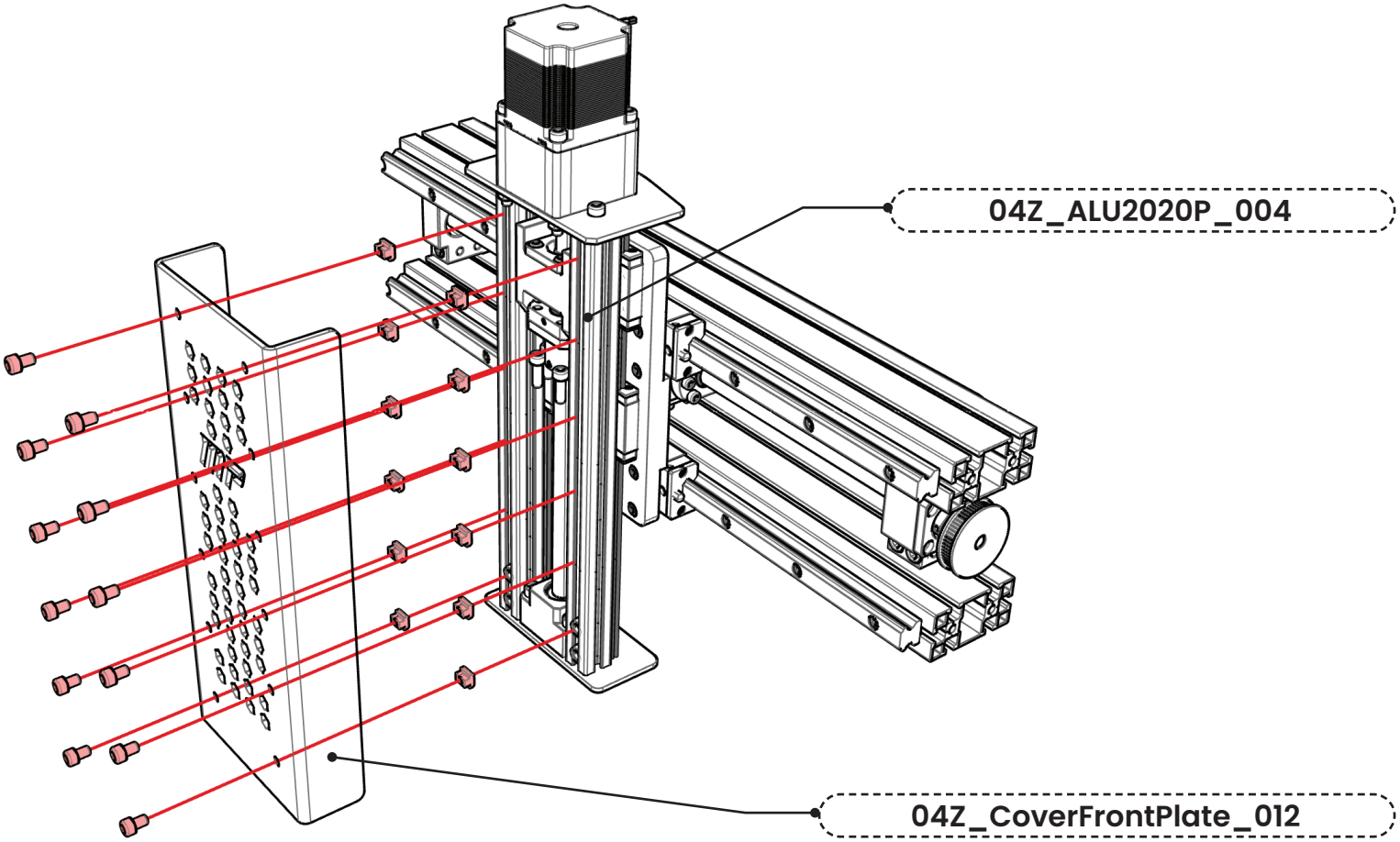

PAUSE FOR A BREAK

Acknowledging the importance of maintaining focus and well-being during the assembly process, take a short break to rest and recharge. Enjoy a brief break before proceeding to the final assembly steps. It's essential to work comfortably and stay alert for the best results.

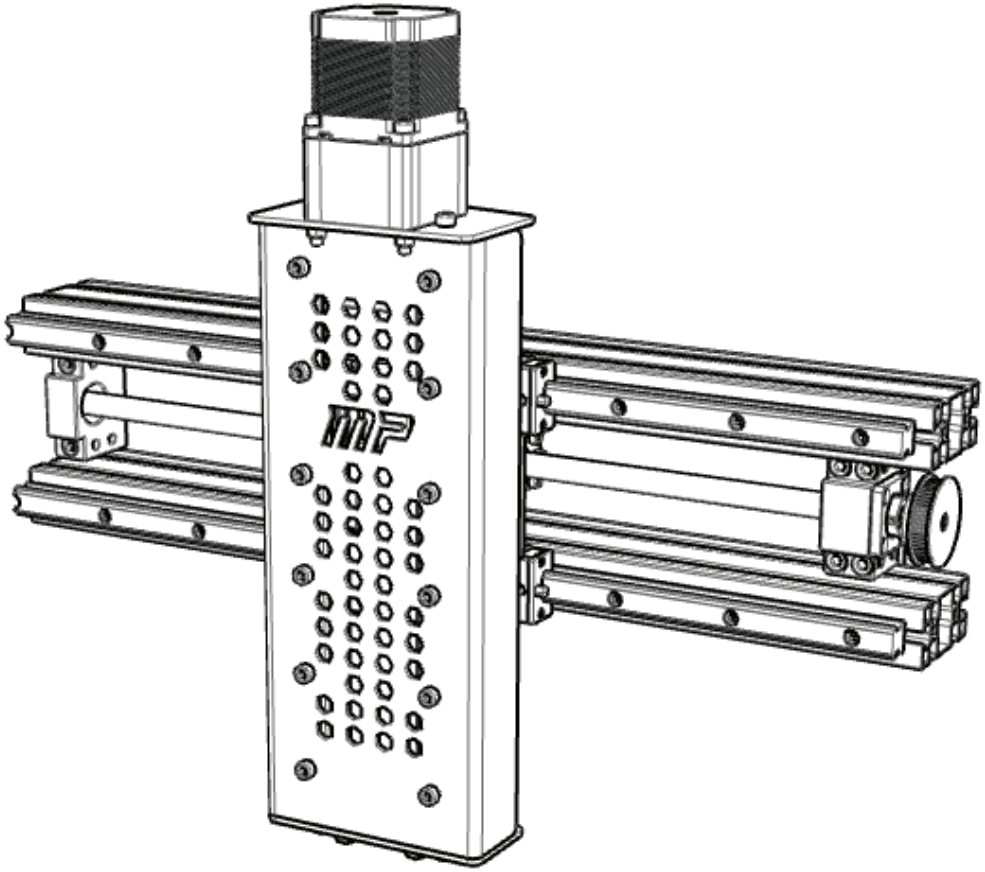

STEP . 31 Install the X-panel supports

Use The **M6x14 & M6 nuts** to securely fasten the **003X_Left /Right panel Support** with **Right / Left Frame**
Tighten the set screws & make sure it sits flush.

Make sure that both pieces are properly aligned as shown below.
Take your time to ensure precise alignment, as this is crucial for the overall stability and functionality of the assembly.

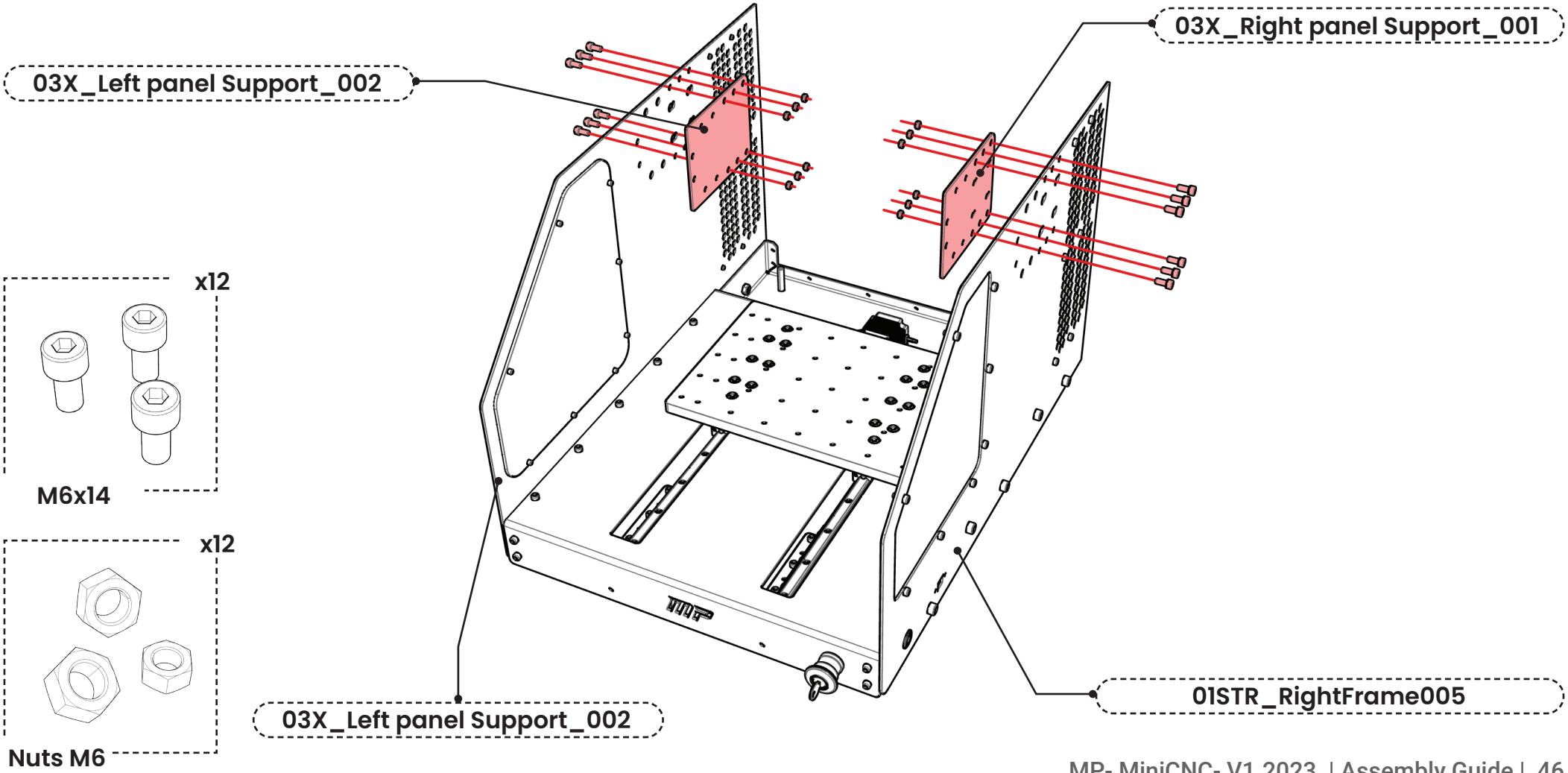

STEP . 32 Mount X- Z Axis Assembly

Use The **M5x20** to securely fasten the **X - Z Axis Assembly** with **Right / Left panel support.**
Tighten the set screws & make sure it sits flush.

This task requires the assistance of two individuals to ensure both pieces are properly aligned, as shown below.
Please do not attempt to complete this step alone.
Seek help to safely and accurately align the components.

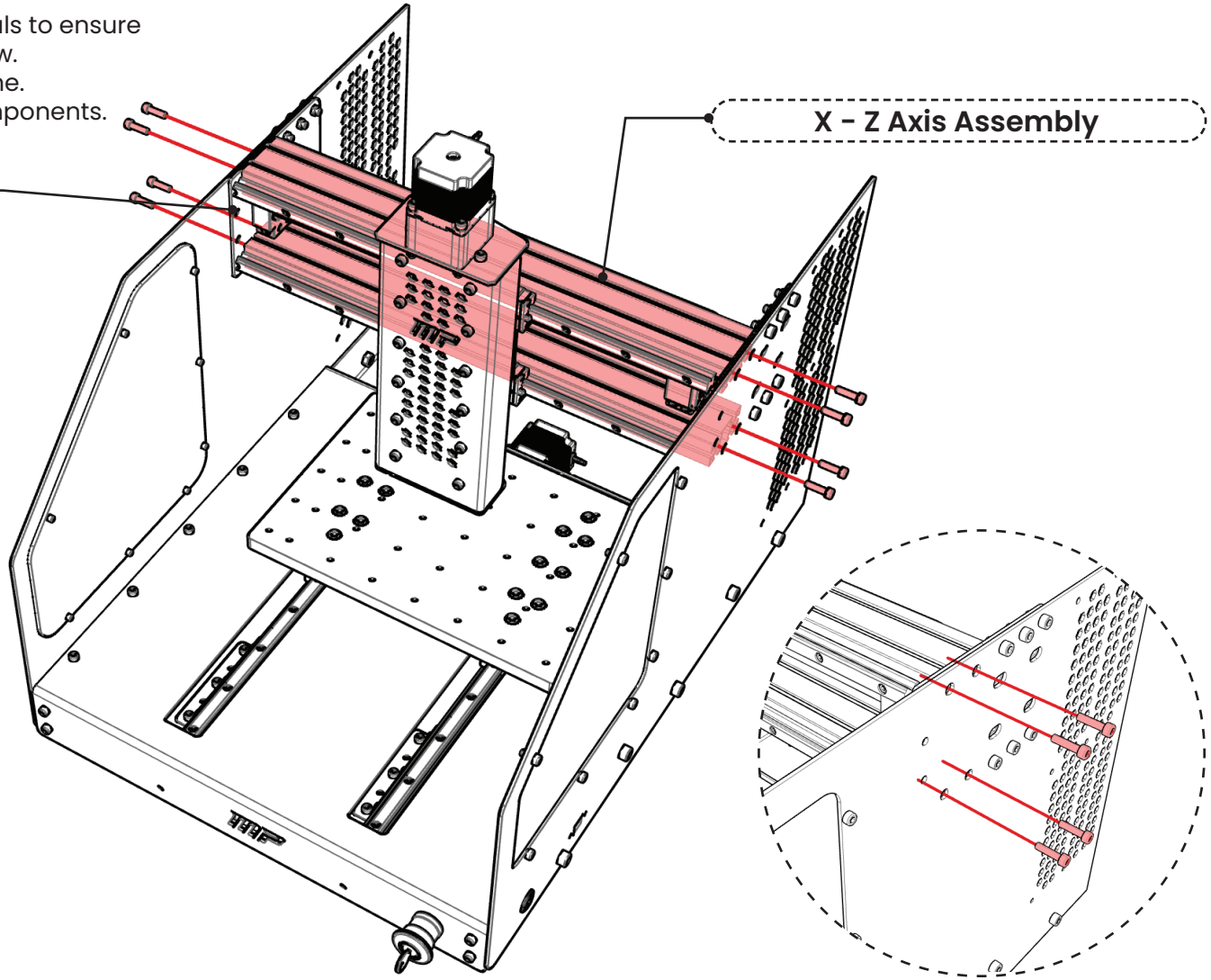

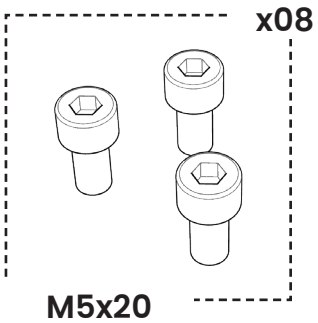

STEP . 33 Mount the Spindle Assembly

Use The **M6x60** to securely fasten the **04Z_500w Spindle Mount_016** with **04Z_CoverFrontPlate_012.**
Tighten the set screws & make sure it sits flush.

Carefully adjust the level to align it with your routing plate.
Ensure precise alignment for accurate and efficient assembly.

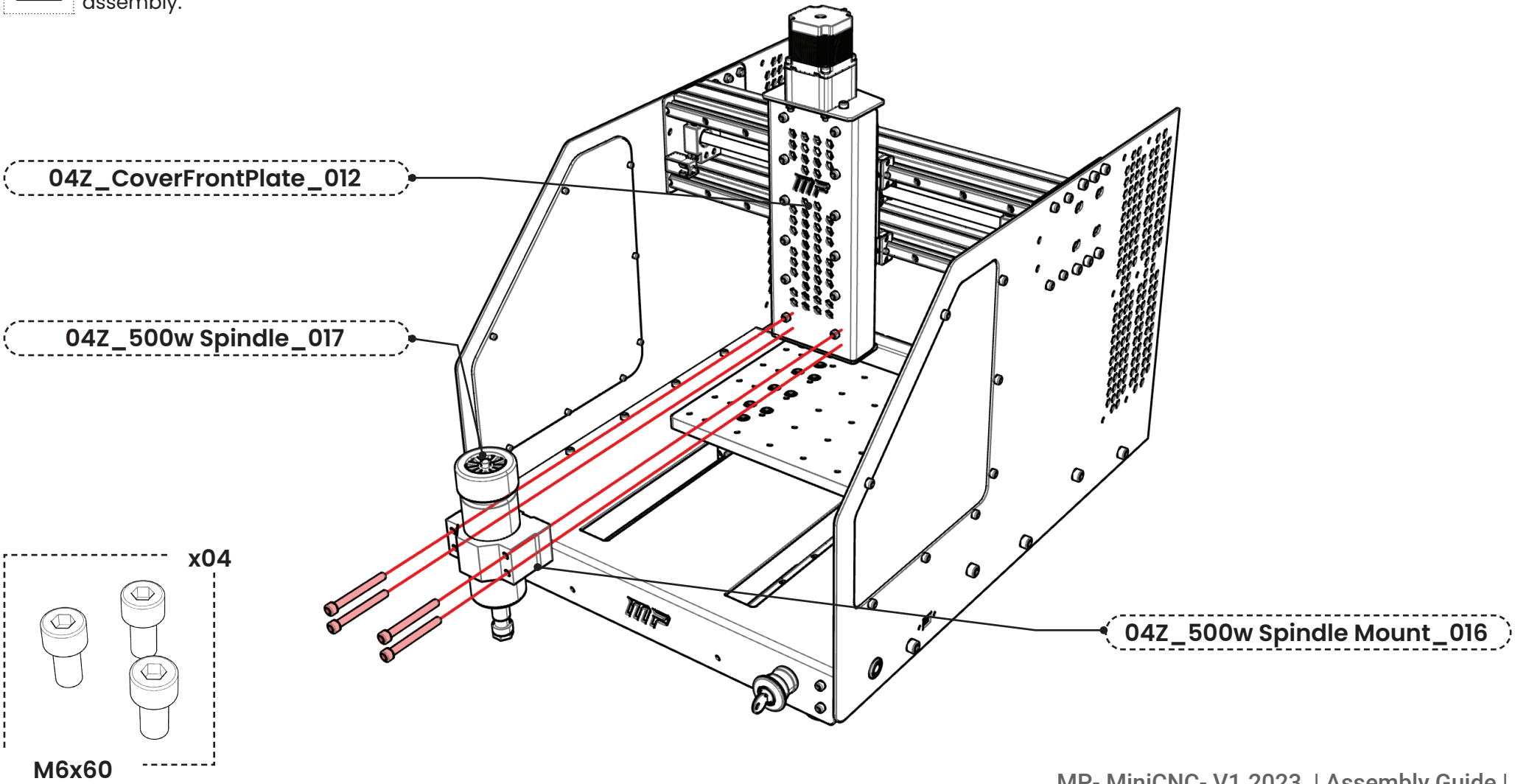

STEP . 34 Mount the Spindle Assembly

Position the **03X_Timing Belt GT2** onto the **03X_GT2_60T_8mm_015** component to prepare it for the next task.
Mount the **03X_GT2_60T_8mm_Small_016** on the side of the motor axis. Ensure a secure and precise fit.
Beginning with the M4x45 fastener, insert it successively through the following components in the order specified
*RightFrame005
**03X_Right Panel Support
***03X_Stepper23 Spacer Support_013
****Secure the fastener to the stepper motor using M5 nuts.

Carefully, tighten & adjust the postion of the assembly to tense the belt.

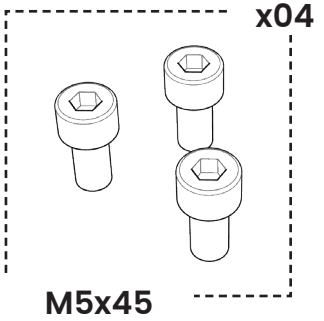

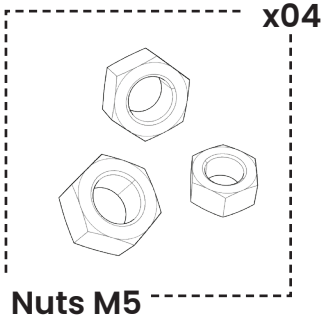

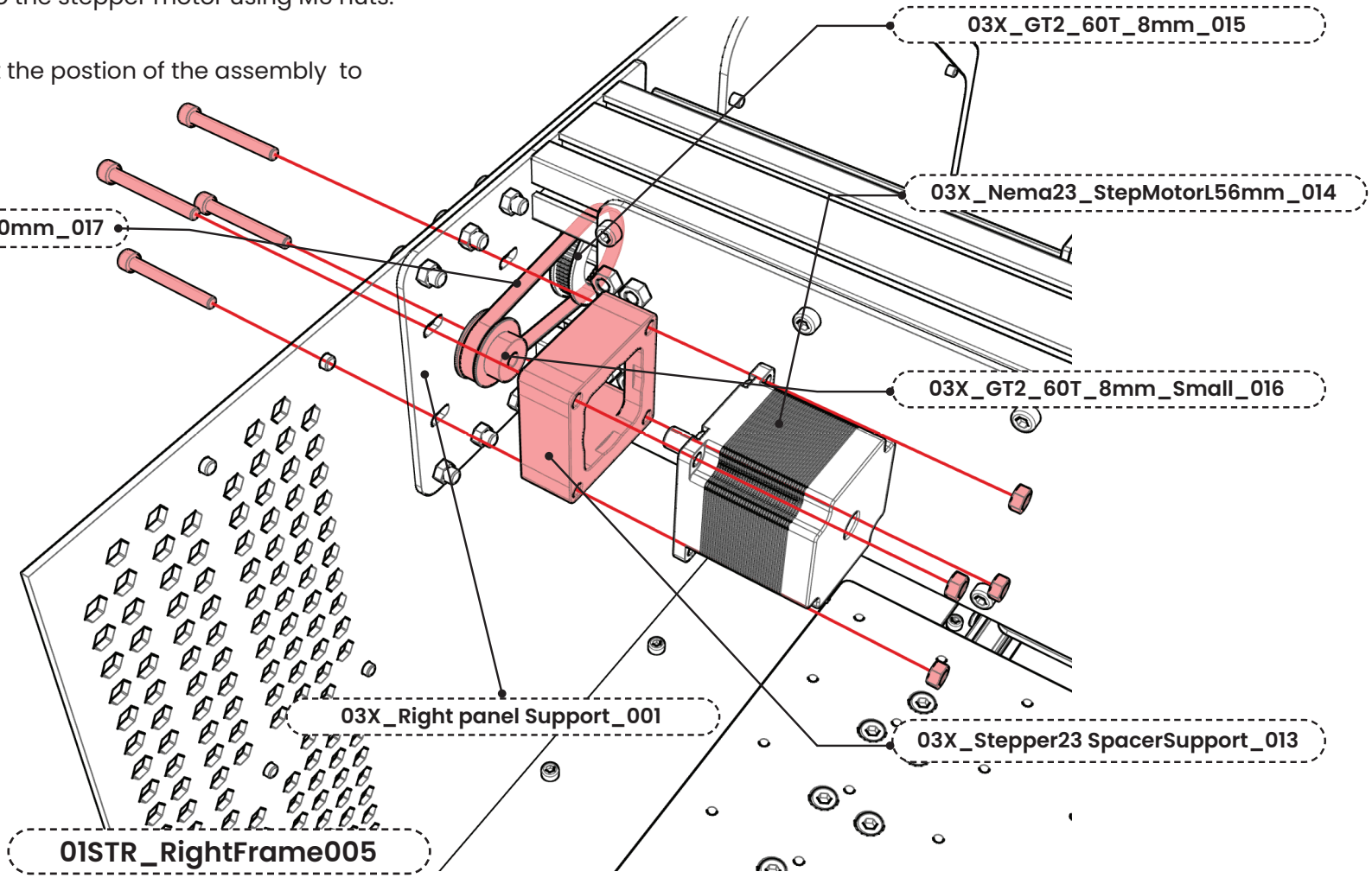

STEP . 35 Mount the structure Front Frame

Slide **01STR_FrontFrame003** between the **01STR_ Left & right Frames**
Use The **M5x6** to securely fasten the **01STR_FrontFrame003** with **01STR_ Left & right & Base Frames**
Tighten the set screws & make sure it sits flush.

Ensure precise alignment for accurate and efficient assembly.

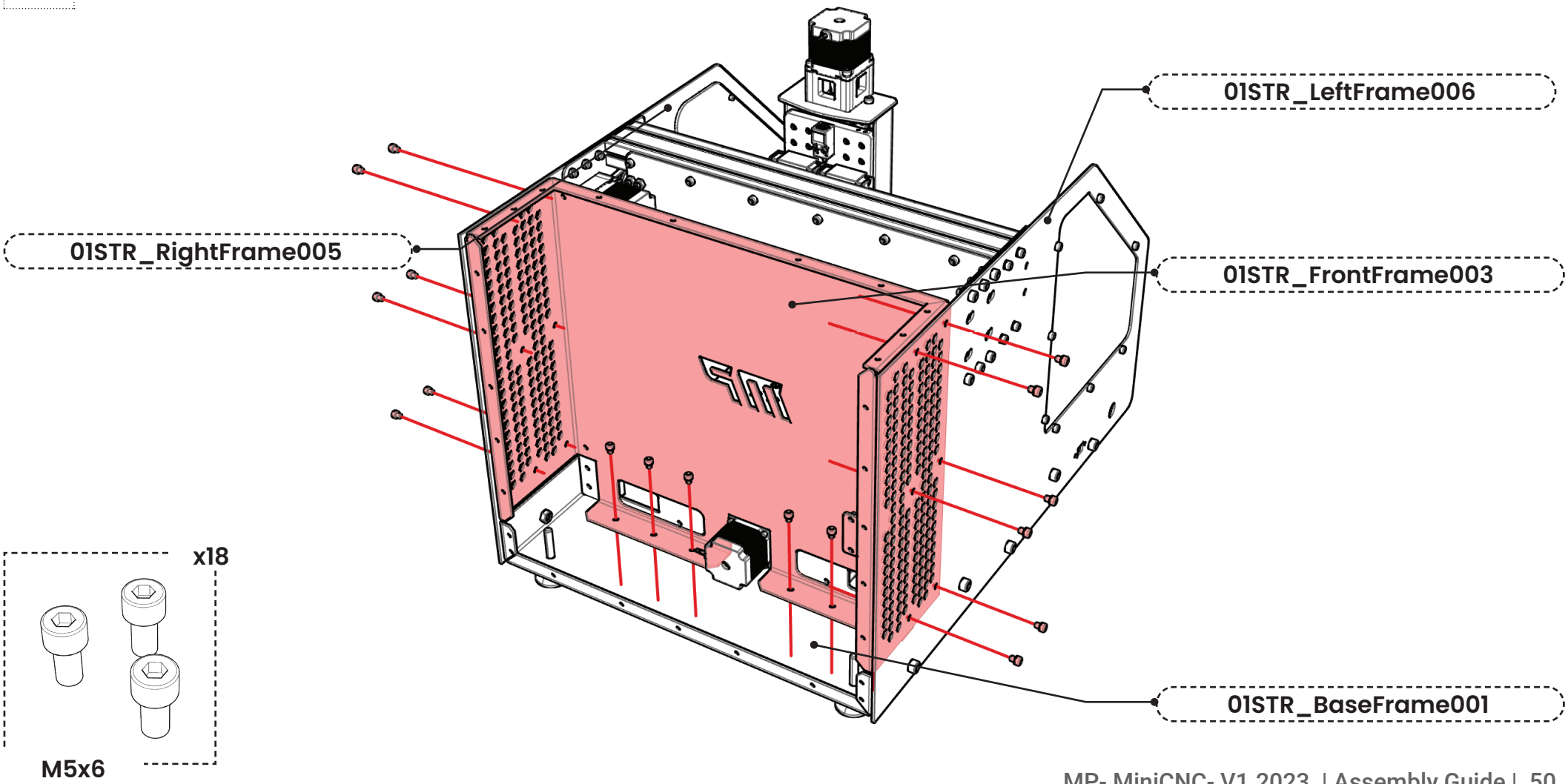

STEP . 36 Mount the Electronic panel

Begin by carefully attaching the electronic panel to the **01STR_FrontFrame003** using **M5x10** fasteners.
Ensure that the set screws are properly tightened and that the panel sits flush against the frame.
Maintain Organized Wiring.

Throughout the assembly process, make a concerted effort to keep the wiring neat and organized.
Properly organized wiring helps ensure a clean and efficient final assembly.

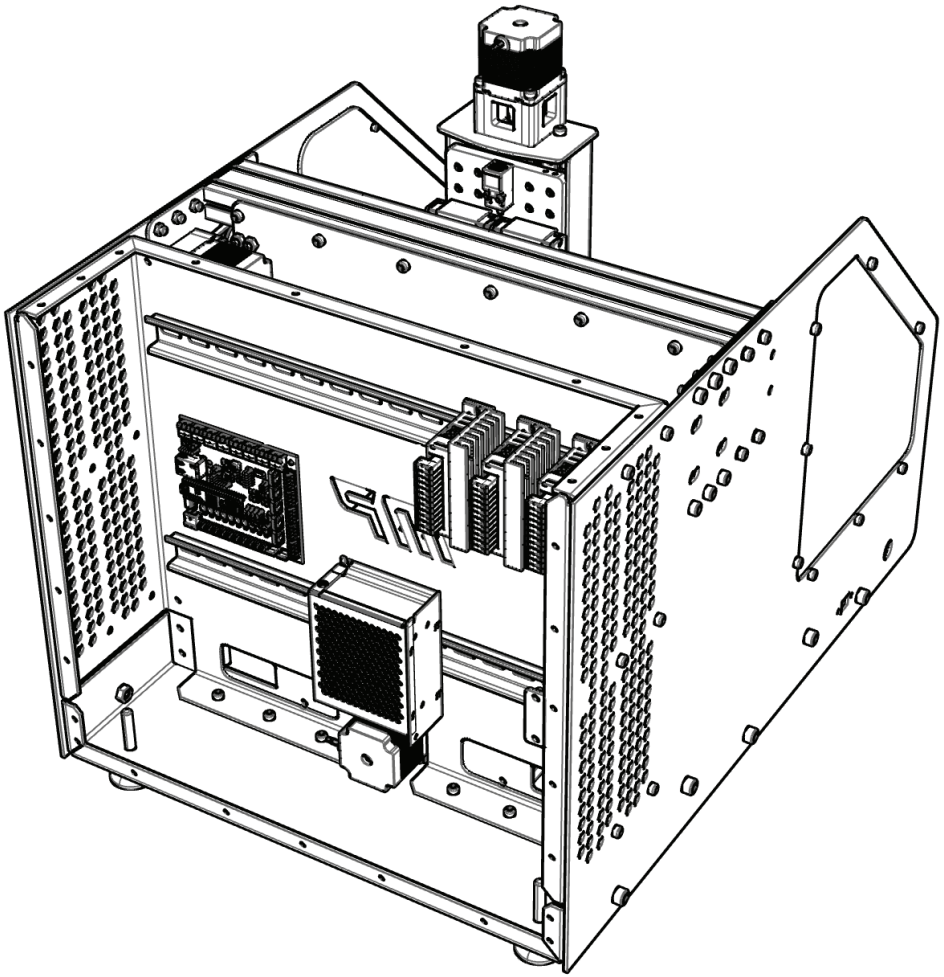

STEP . 37 Close the machine frame

Use The **M5x6** to securely fasten the **01STR_UpperFrame007** and **01STR_BackFrame004** with the machine frame.
Tighten the set screws & make sure it sits flush.

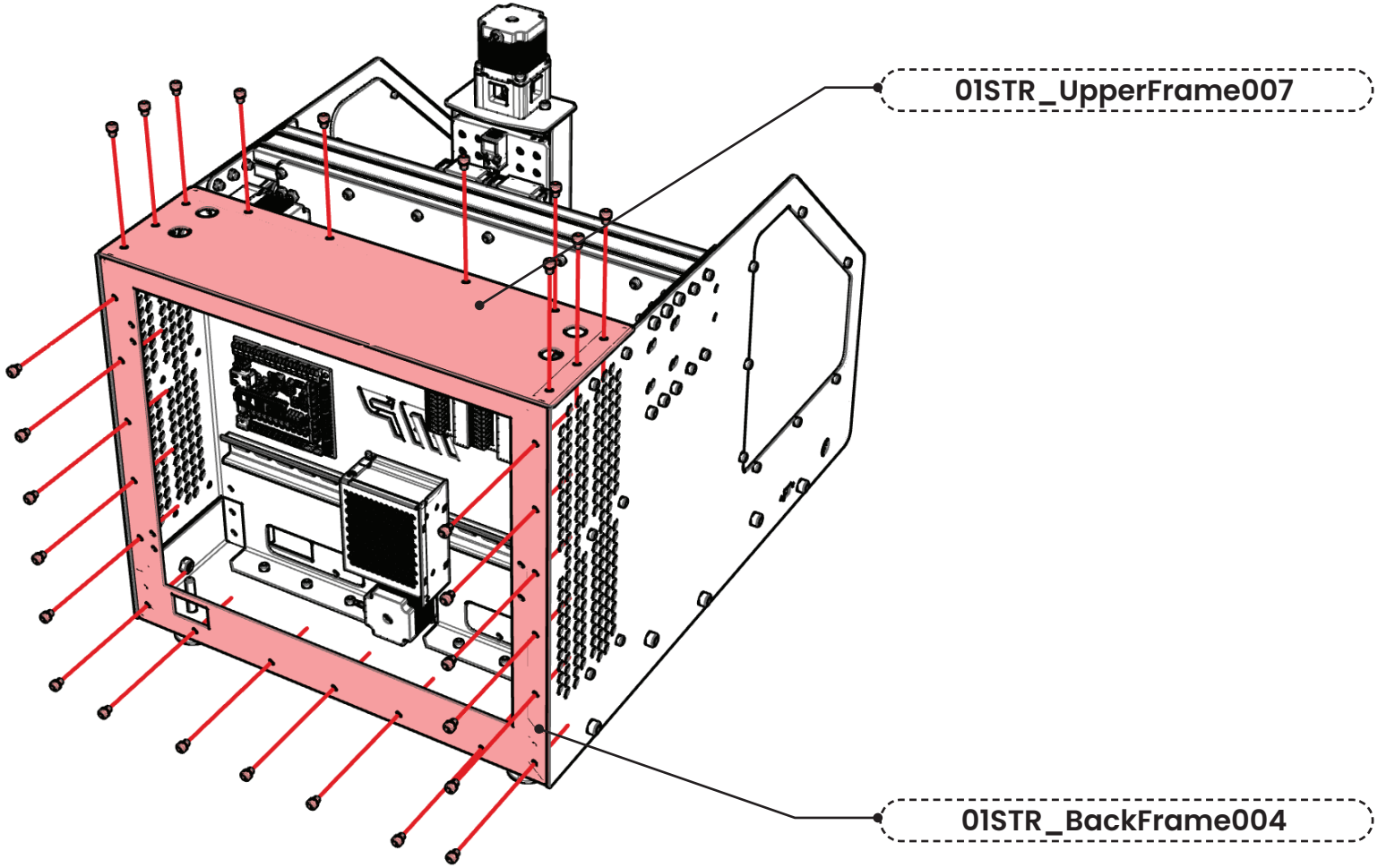

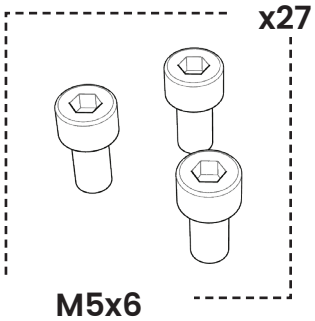

STEP . 38 Mount the machine door

Use The **M5x6** to securely fasten the **01STR_ElecCapot_010** and **01STR_ElecCapot_Hinge_011** with the machine frame.
Tighten the set screws & make sure it sits flush.

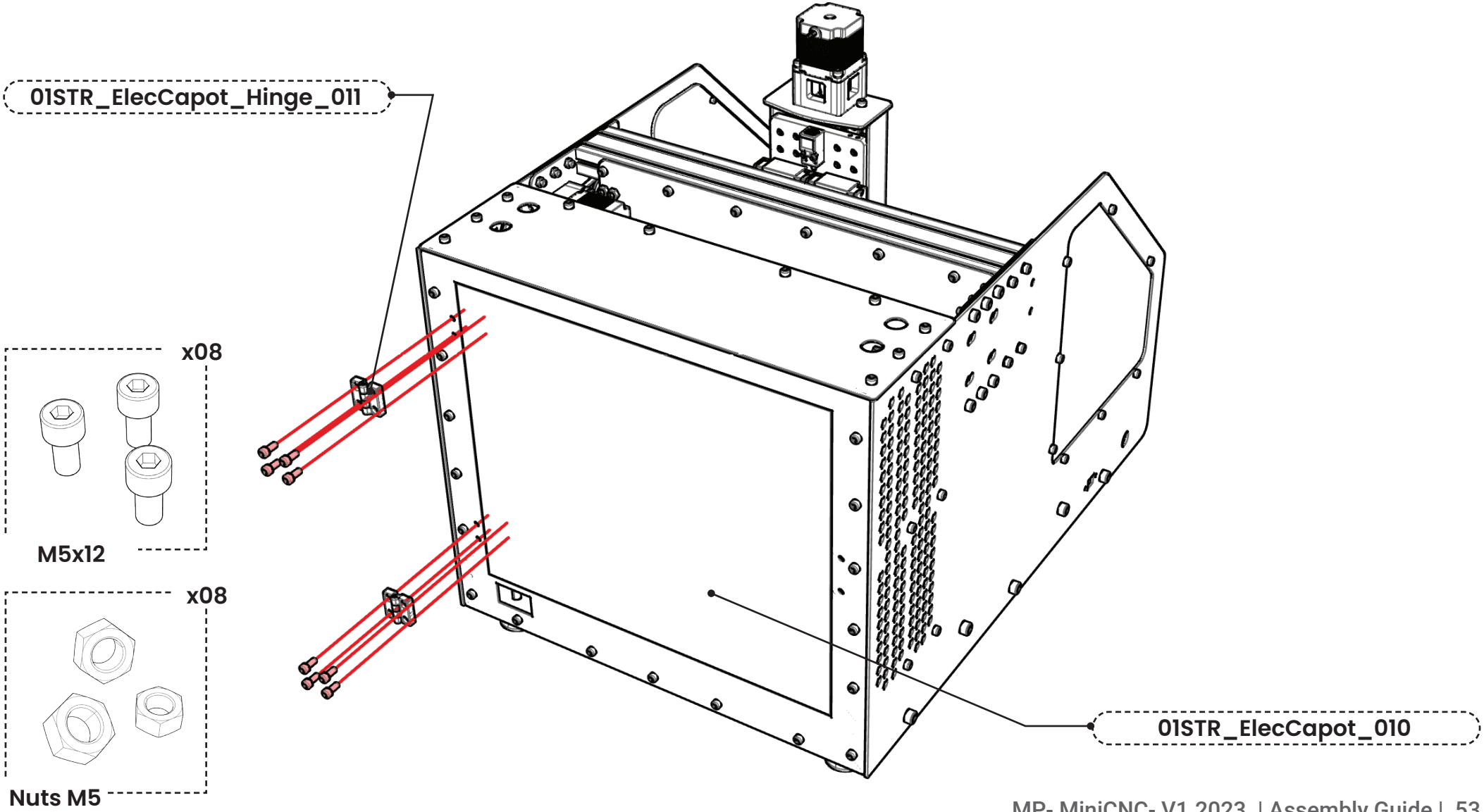

STEP . 39 Mount the machine SecurityGlass

Use The **M5x6** to securely fasten the **PlexiG Panel** with the machine frame.
Tighten the set screws & make sure it sits flush.

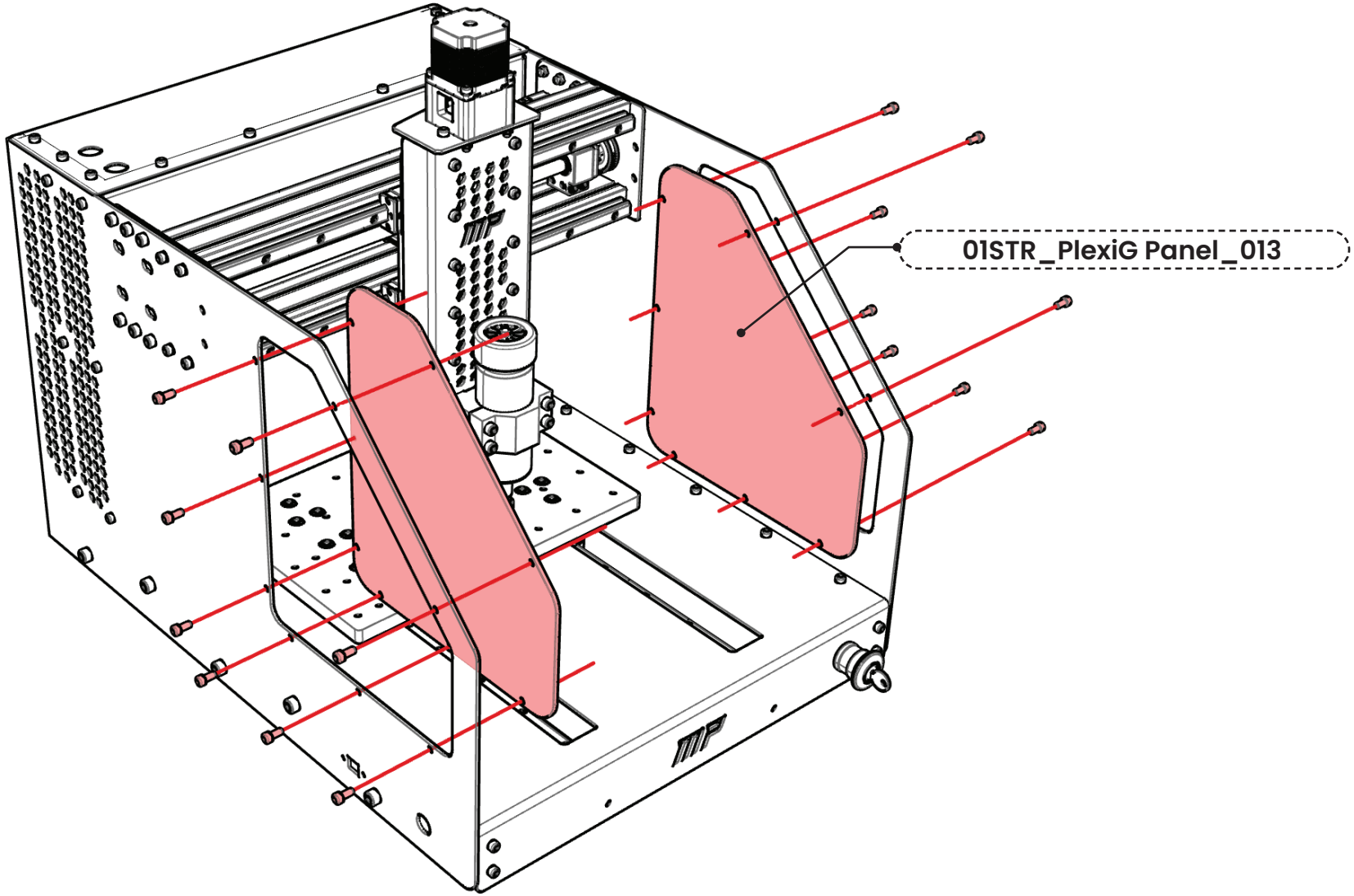

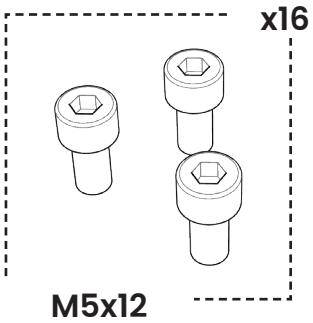

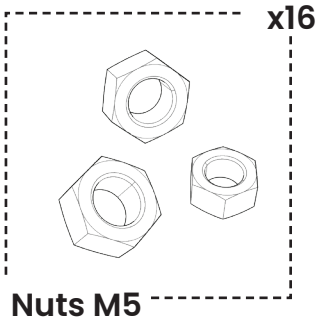

STEP . 40 Machine Programming