Machine Building Workshop – June 2023

TinyULTOR 2020 V1 _ Assembly guide

Open source 3D printer machine

GitHub

*Edited by **Alila Kais** & **Alila Mhamed***

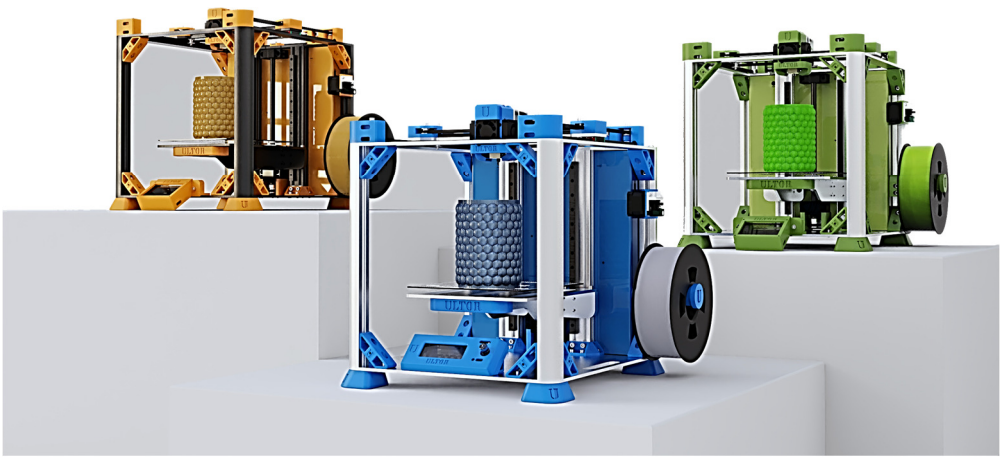

STE - FAB 619 | on demand fabrication

Mail : alilamhamed@fab619.tn
alilakais@fab619.tn

GSM : (216) 24 63 10 38
(216) 54 54 47 31

Adresse : **(Tunis)** Bureau A8-8 sis Golden Towers, Centre Urbain Nord
(Monastir) Fabrique entrepreneuriale, Technopole neotex, 5012, Sahline

www.fab619.tn

INMACHINES

FAB619

Authors

TINYULTOR 2020 3D Printer has been designed and built by Fab619 On-Demand-Fabrication in collaboration with InMachines Ingrassia GmbH &

Team design:

Kais ALILA | Alila Mhamed | ZOMITA Khayreddine | Ltifi Haythem | Samer Jawadi | Ahmed Kaddour belaid

The machine is part of the **Digital4Job project** for the open machine design and assembly workshop in Tunisia.

Acknowledgements

The development of this machine is part **of Digital4Job Project** implemented by:

- Helmut-Schmidt-Universität Universität der Bundeswehr Laboratorium Fertigungstechnik Holstenhofweg 85 22043 Hamburg
- OpenLab Hamburg
- GIZ

License

Hardware design, CAD and PCB files, BOM, settings and other technical or design files are released under the following license:

- **CERN Open Hardware Licence Version 2 Weakly Reciprocal - CERN-OHL-W**
- Assembly manual, pictures, videos, presentations, description text and other type of media are released under the following license:

- **Creative-Commons-Attribution-ShareAlike 4.0 International - CC BY-SA 4.0**
- **License Owner InMachines Ingrassia GmbH**

Note
This documentation will be continuously improved as soon there are updates and/or improvements on the machine.

Disclaimer
This hardware/software is provided "as is", and you use the hardware/software at your own risk. Under no circumstances shall any author be liable for direct, indirect, special, incidental, or consequential damages resulting from the use, misuse, or inability to use this hardware/software, even if the authors have been advised of the possibility of such damages.

Welcome to the ULTOR 3020

3D Printer machine Assembly guide

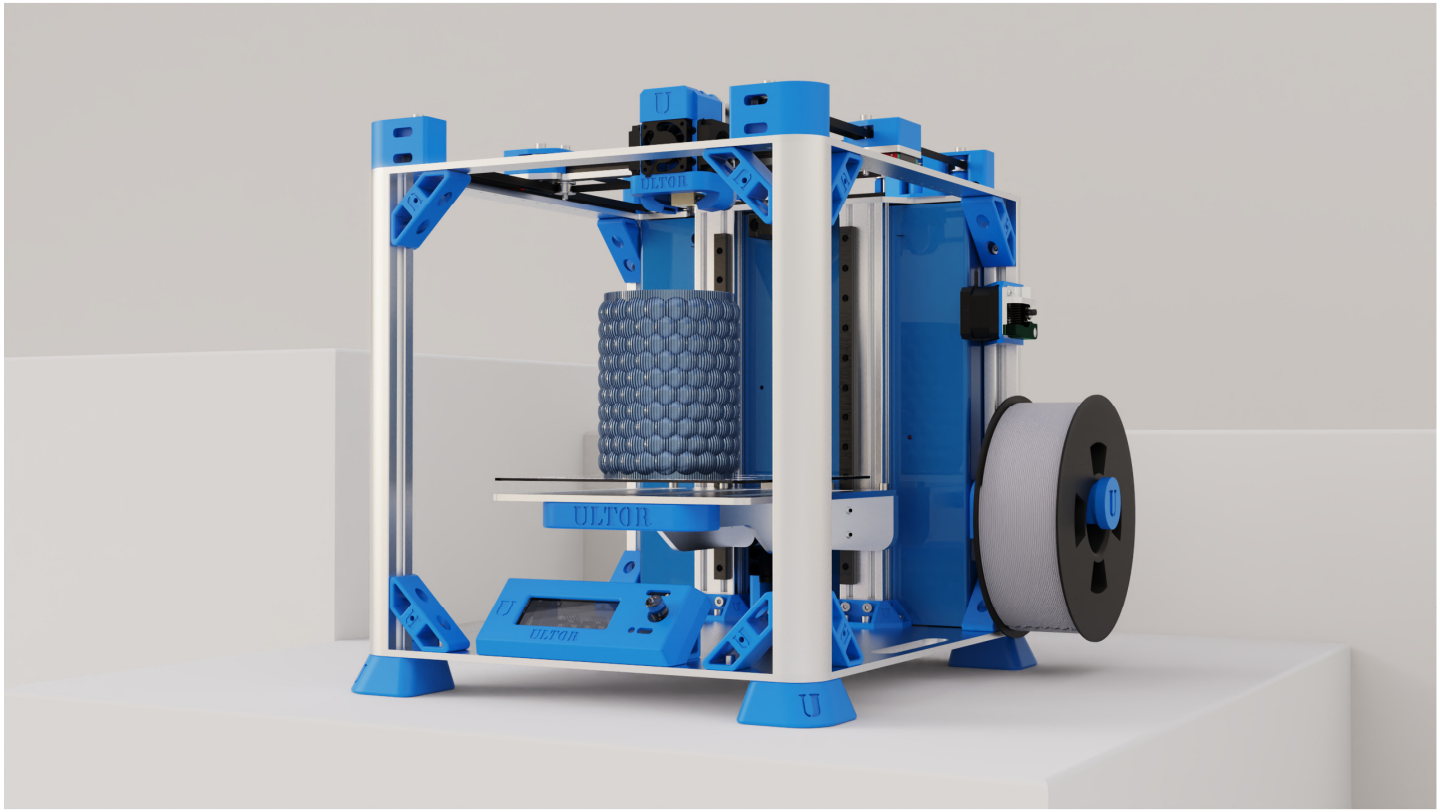

We are excited to share our open-source 3D printer project in collaboration with **Inmachines Gmbh.**
The TinyULTOR 2020 is a powerful and reliable 3D printer that we have designed for professionals and enthusiasts alike. By releasing this project on GitHub, we hope to encourage collaboration and innovation in the 3D printing community.

The **ULTOR 2020** is an open-source desktop 3D printer with a spacious printing volume of **200x200x250 mm**. The machine comes in a kit assembly form, which means that you get to assemble the printer yourself. This can be a fun and rewarding experience, and we have put together a comprehensive guide that will walk you through the assembly process step by step.

Our repository contains all the information and resources you need to get started with the ULTOR 3020. You will find detailed documentation, schematics, firmware, and software that will help you build and customize your own ULTOR 3020 3D printer. We have also included an issue tracker to make it easy for you to report any bugs or suggest improvements.

We believe that open-source projects like this one have the power to revolutionize the 3D printing industry. By sharing our design and development process with the community, we hope to inspire others to join us in pushing the boundaries of 3D printing technology.

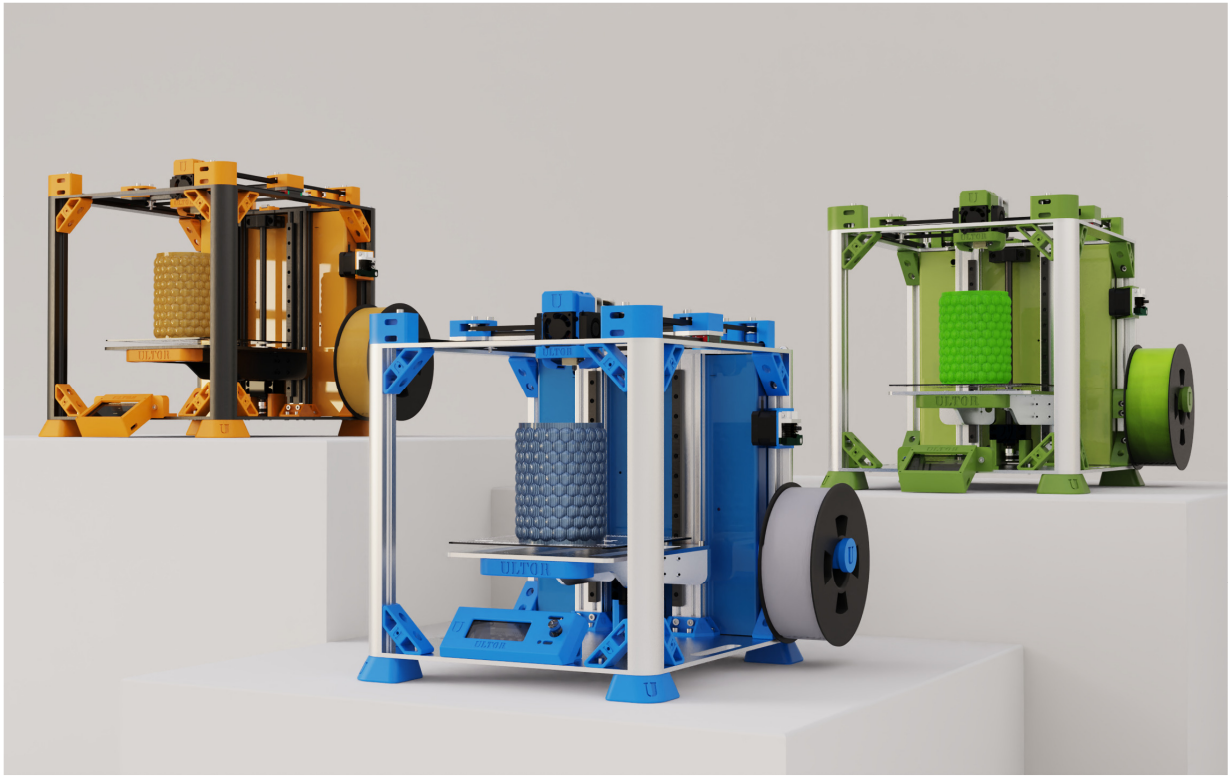

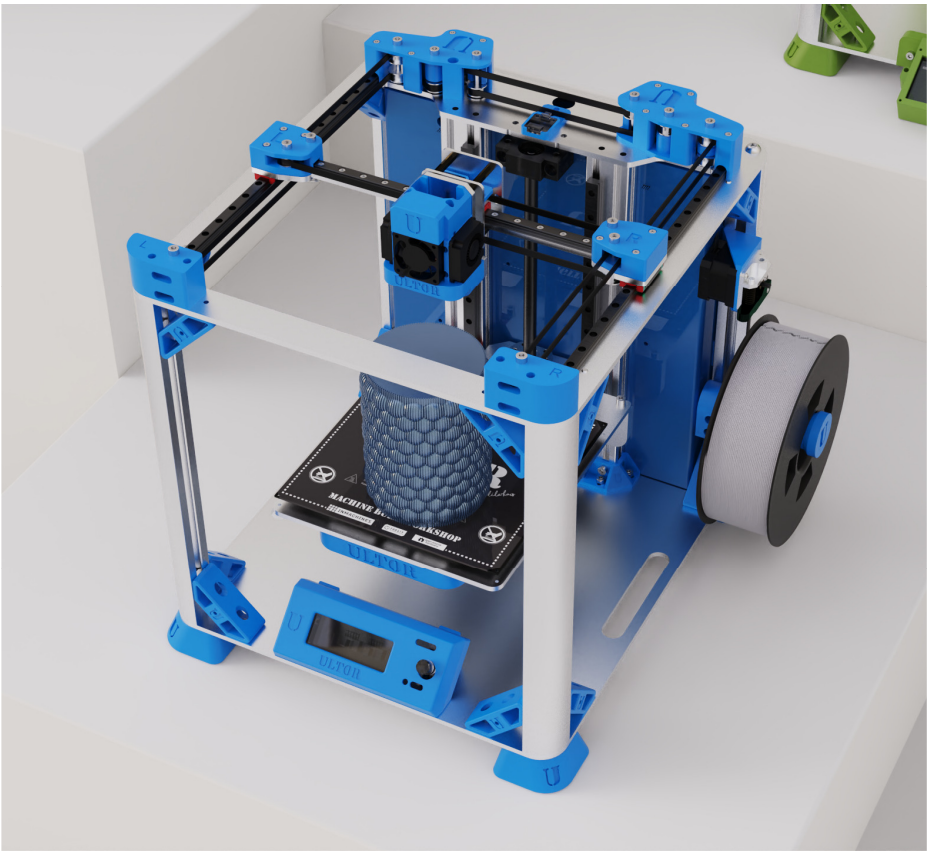

- **Build volume:** 200x200x200mm
- Sturdy aluminum frame for stability and reduced vibration
- **Bed:** aluminum with non-sticking layer
- **Motion:** COREXY system with GT2 6mm belt, Z axis: Sfu 1204 Ballscrew.
- **Guides:** 9 & 12mm linear shaft, Hiwin MGN Series 9 & 12mm linear rails. MGN9 for XY axis an MGN12 for Z axis.
- **Motors:** stepper motor NEMA 17
- **Drivers:** Trinamic TMC2208
- Adjustable and heated printing bed
- **Screens**: Touchscreen HMI interface for easy operation / Reprap LCD 2004
- **Controller Board:** Rumba3D-SPLink board.

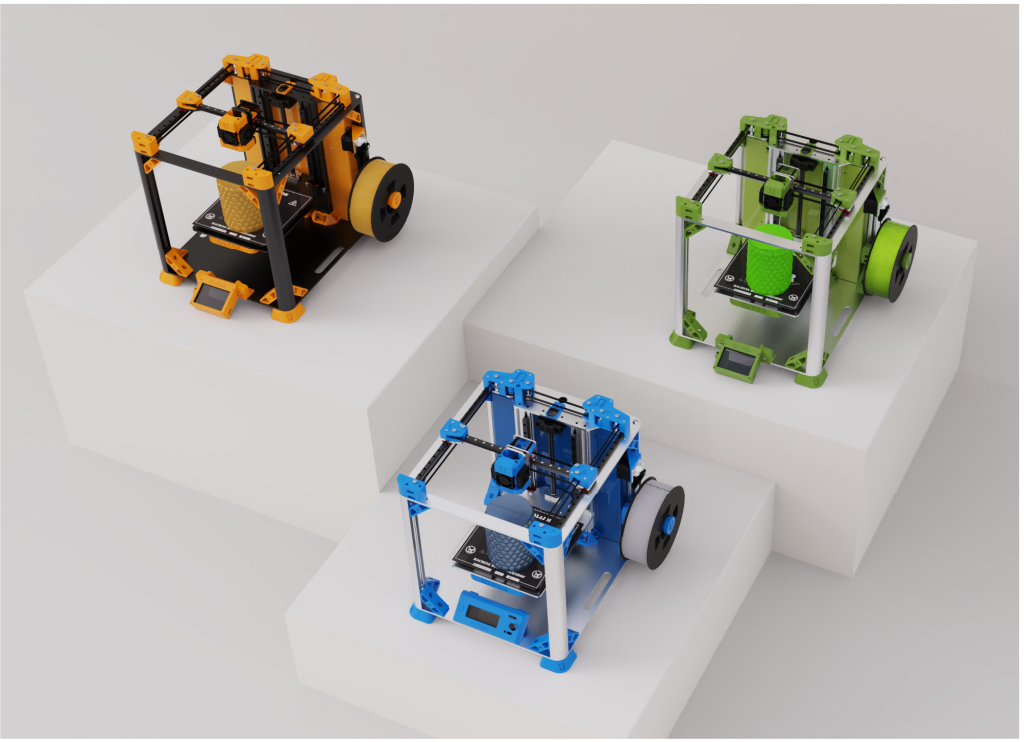

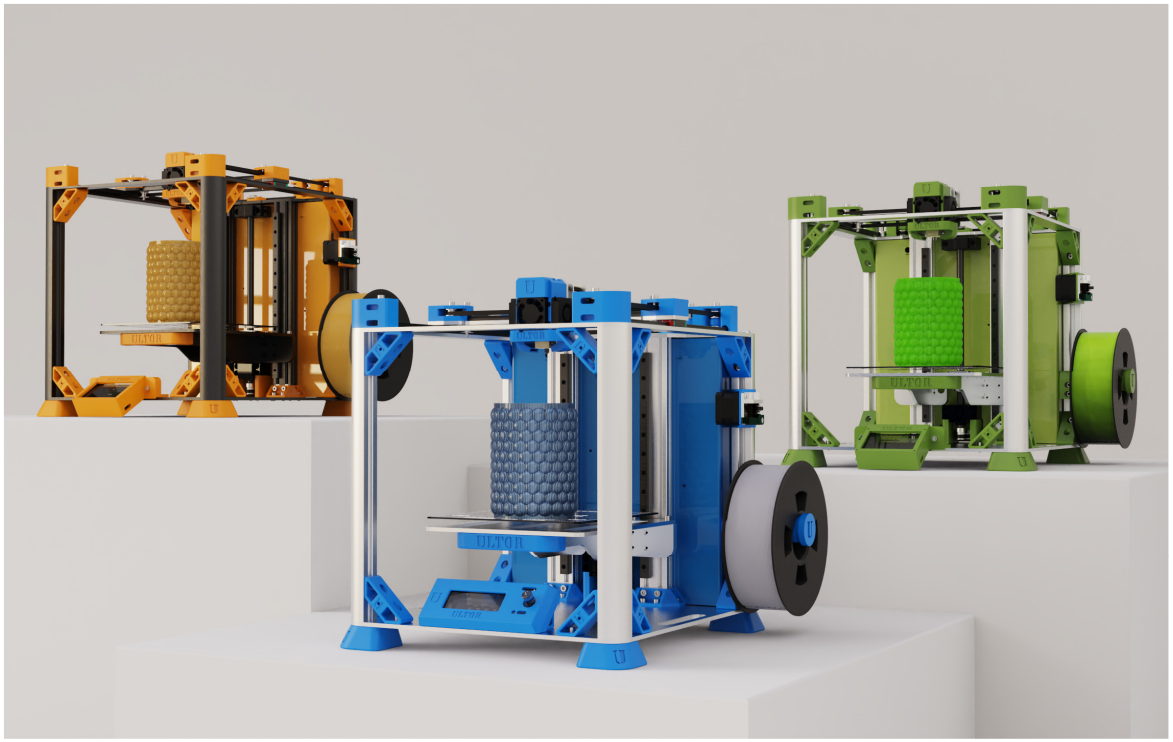

Before starting

90-degree Corner Bracket – installation

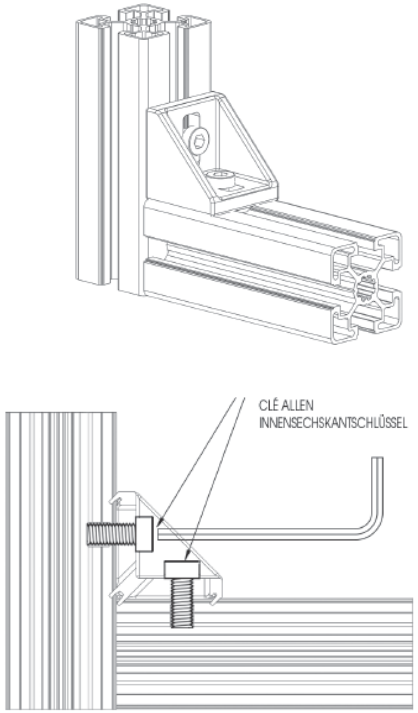

Hammer screw NUT– Fixation

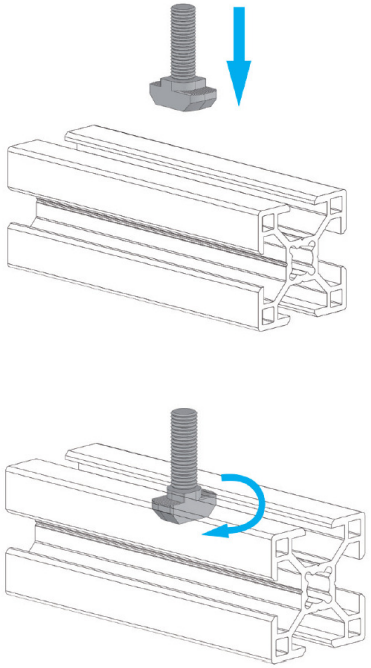

90-degree Hidden Bracket – installation

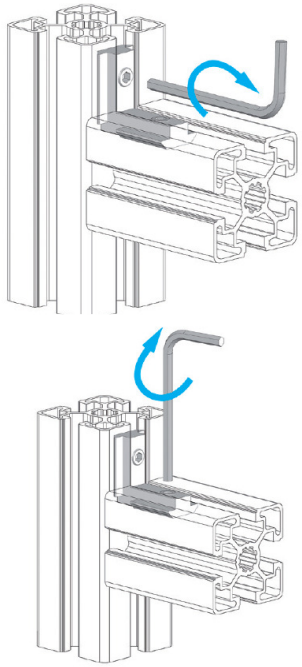

Fastening with angles or connectors. Wide possibility for adjustment and ease of installation.

01. Frame Assembly

*It is **strongly recommended** to assemble the frame on a known flat surface (such as a solid table, work surface or similar). Assembling the frame on a carpeted floor, or other non-flat surface, can cause the finished frame to not be square. This can cause issues with print quality and performance.*

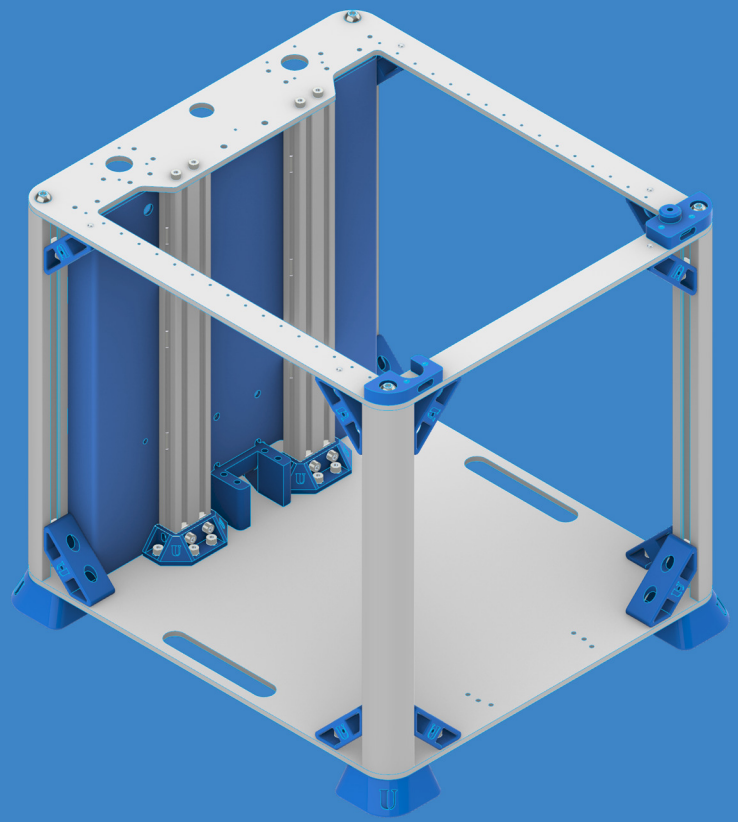

STEP 1 Install extrusions on the bottom base

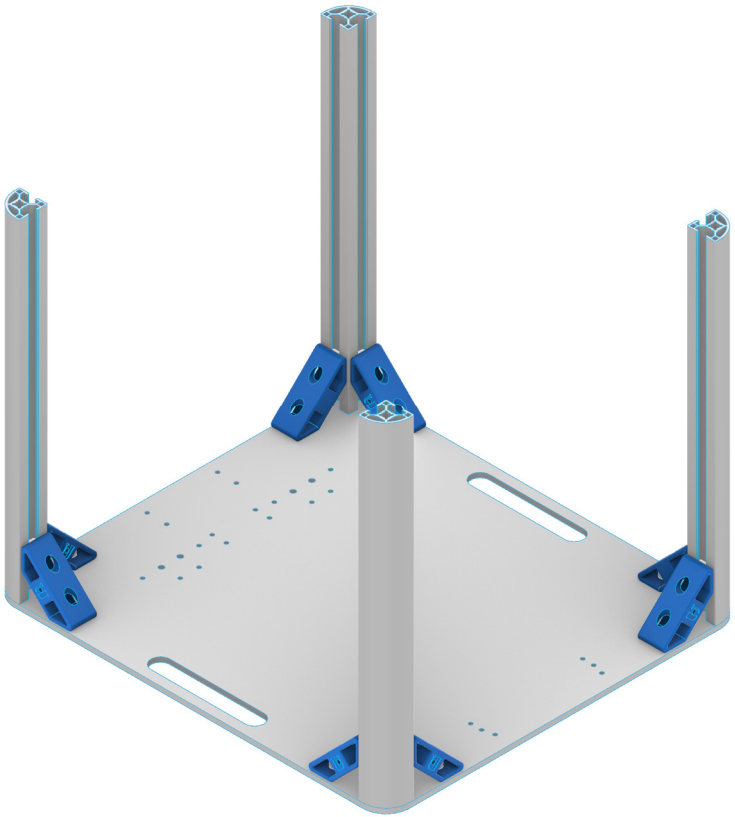

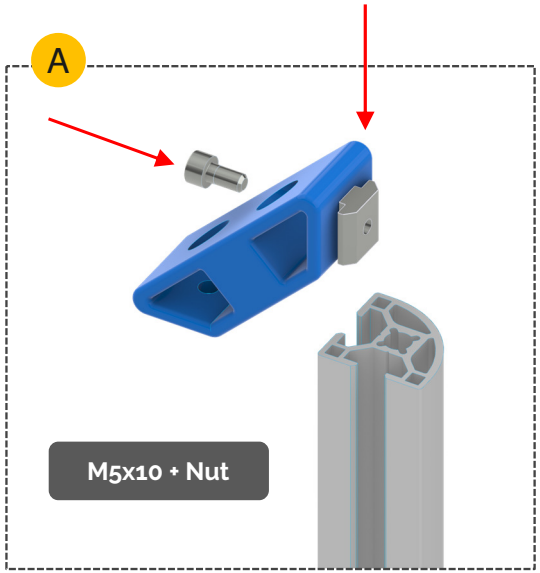

*Install **the U squares** to secure the **355 mm extrusions** to the bottom base.*

Repeat for all extrusions.

Printed Parts
U square

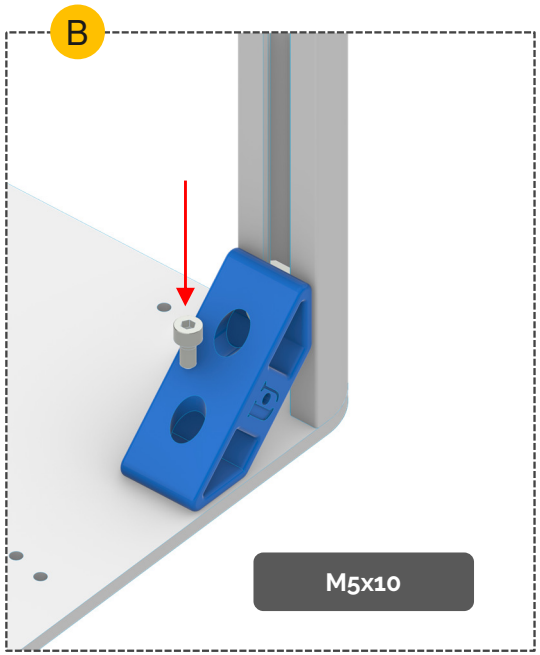

STEP 2 Install machine U-Footer

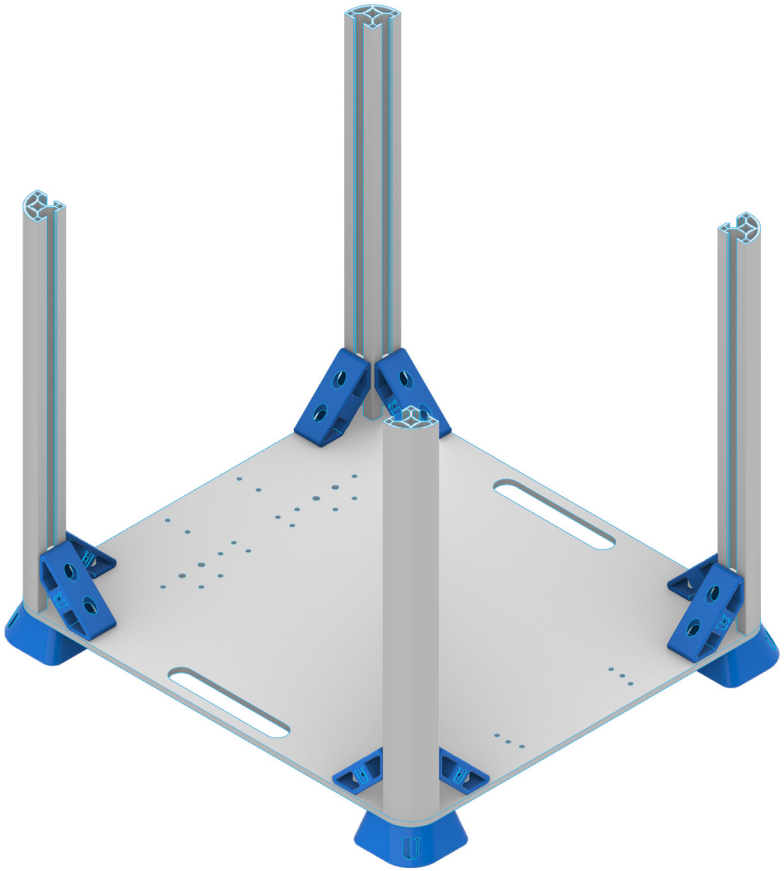

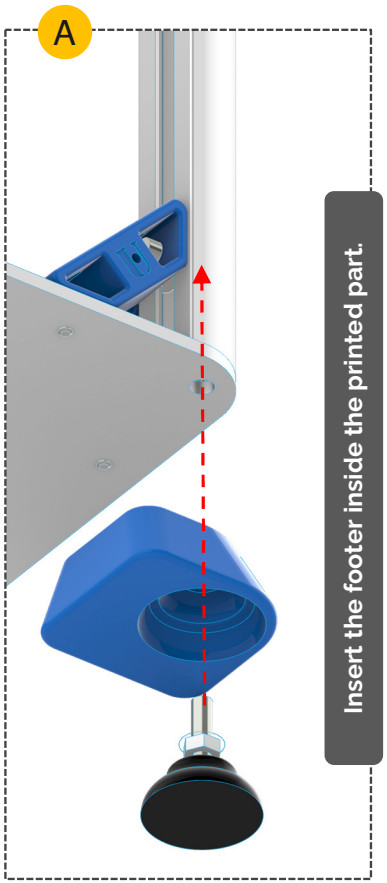

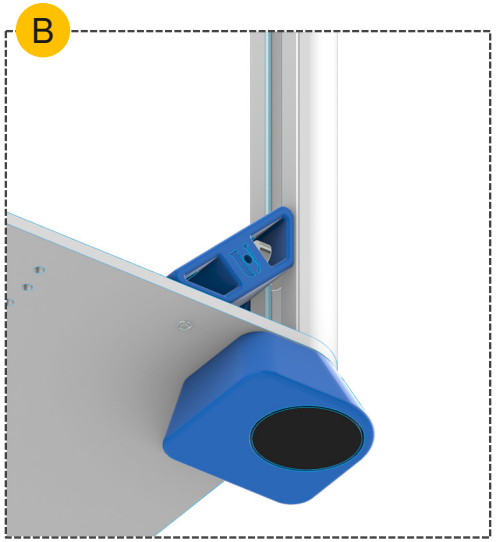

Place them on the bottom of the 3d printer.
Tighten them to the bottom base + Extrusion

Check stability: Gently shake or wiggle the 3D printer to ensure the machine footer is securely attached and the printer remains stable. Make any adjustments if necessary.

Repeat for remaining mounting points (4x).

STEP 3 Prepare the Electronic Panel

A

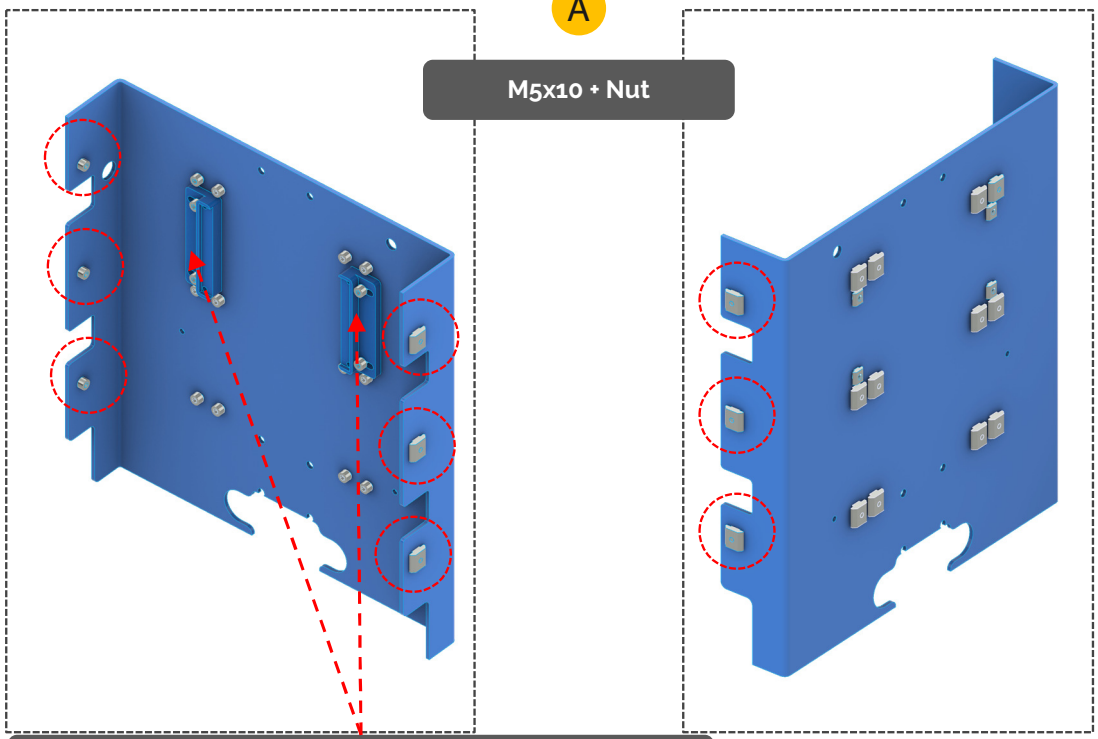

Place SP-Link Board Supports (3d printed)

Insert the M5x10 nuts on the panel. Identify the locations where the M5 nuts will be inserted. These positions should align with the holes of the panel.

B

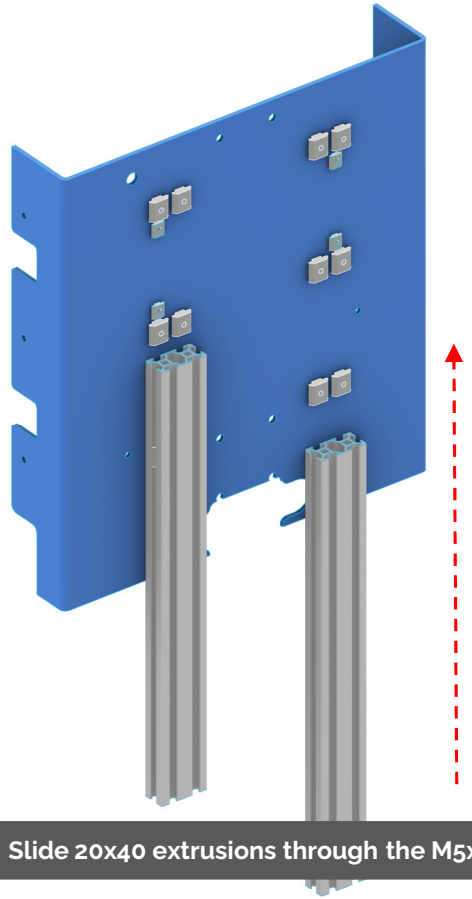

Slide 20x40 extrusions through the M5x10 Nuts

Tighten the M5x10 screws to secure the extrusions.

STEP 4 Secure the Electronic Panel to the back extrusions (Part 1)

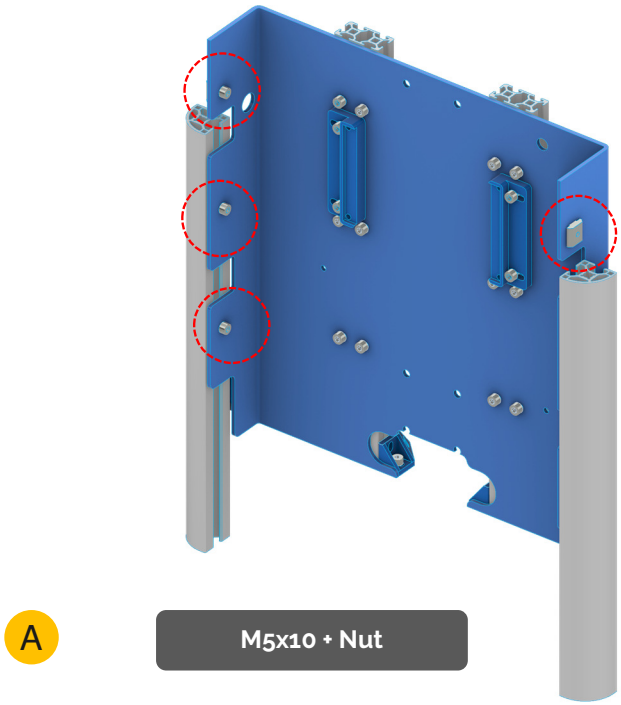

Slide the electronic panel into the back 20x20 Rounded Extrusions. Secure it with M5x10 + Nuts.

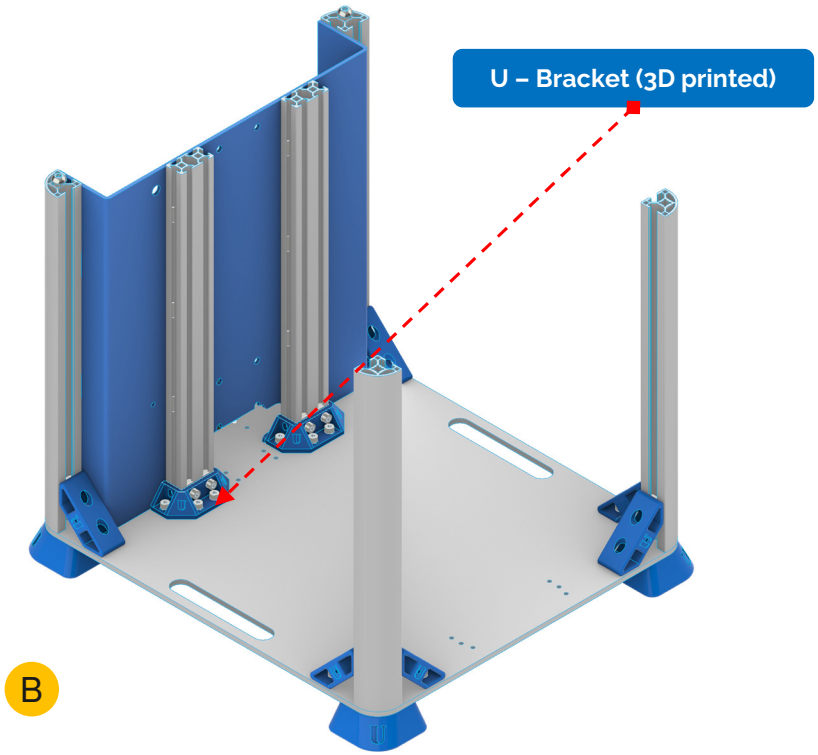

Place the M5x10 Nuts in the U-bracket and slide it to the 20x40 Extrusions.

STEP 4 Secure the Electronic Panel to the bottom base (Part 2)

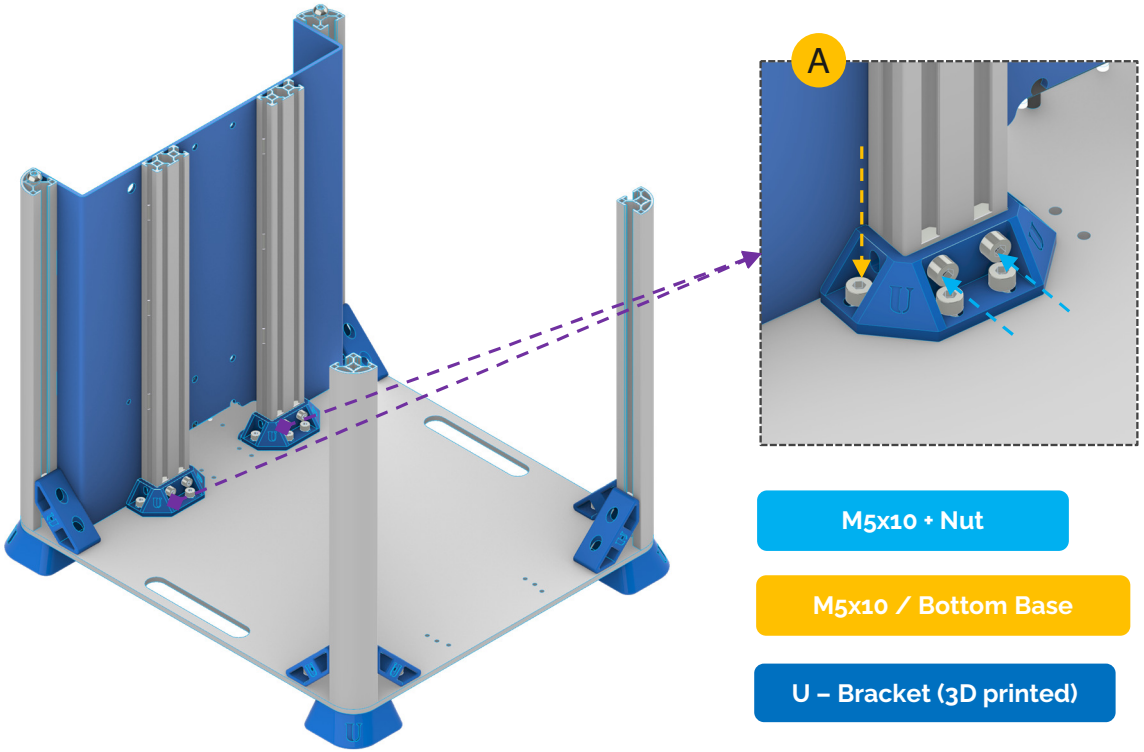

Place the U-bracket on the 20x40 Extrusions. Secure it with M5x10 + Nuts. Secure the Electronic to the bottom base using M5x10 . Instruction A & B

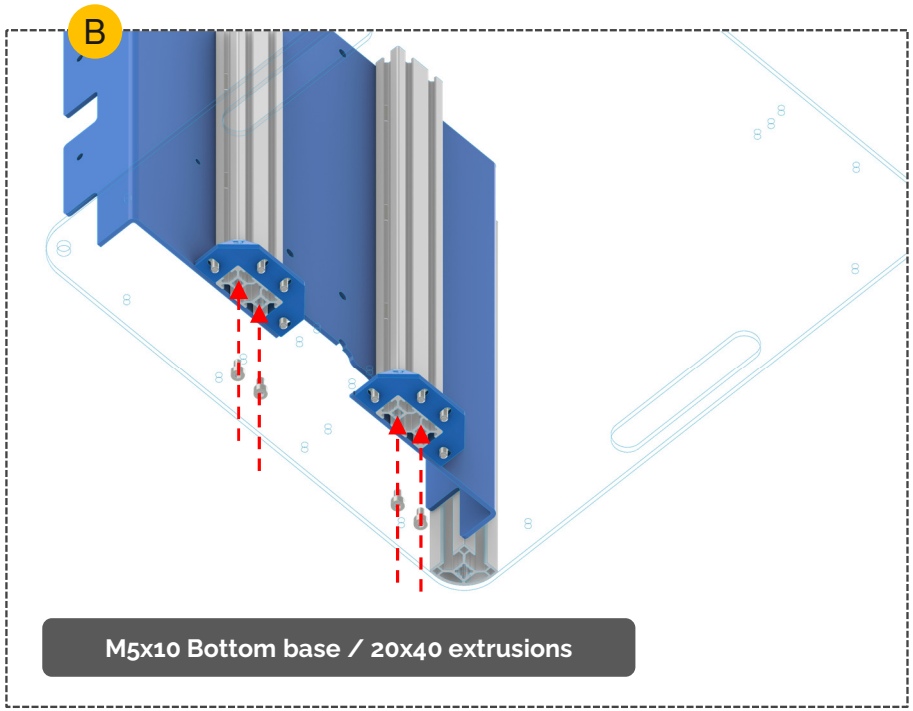

Tighten the M5x10 screws to secure the extrusions with the bottom base.

STEP 5 Place the Aluminum XY Frame (Upper plate) Part 1

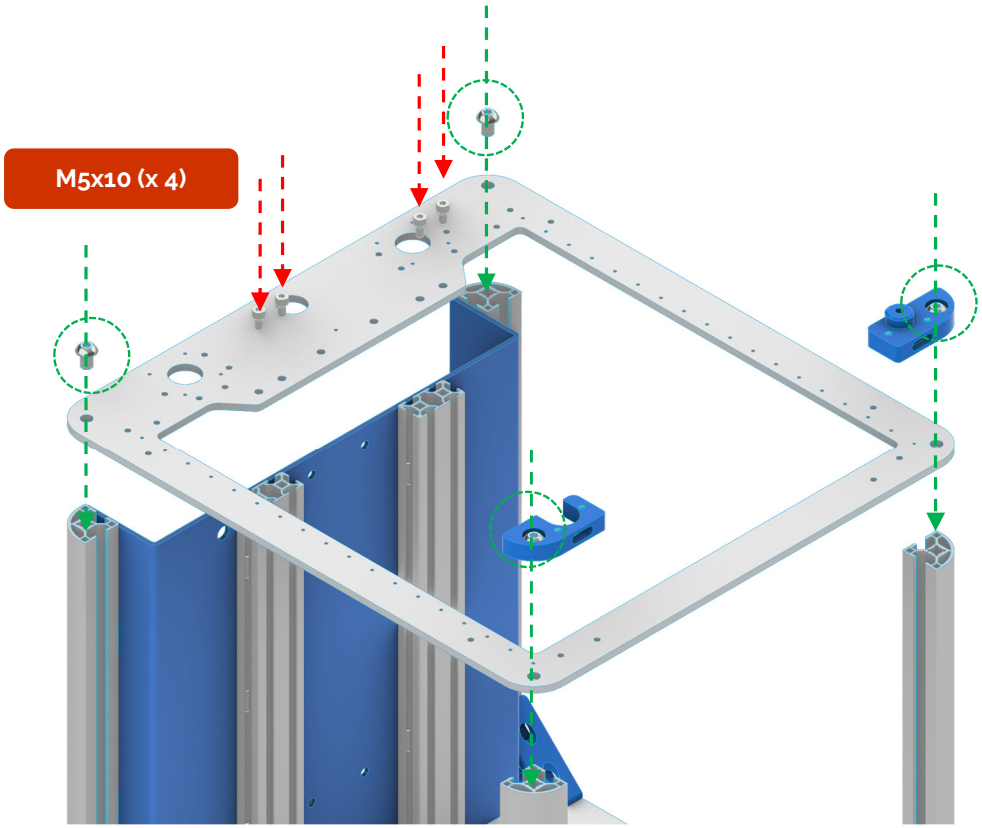

Printed Parts
R- Front Pulley House Bottom
L- Front Pulley House Bottom

M8x16 (x 4)

- *Secure The Aluminum XY Frame to the Rounded extrusions + 20x40 extrusions.*
- *Insert the M8x10 in **R- Front Pulley House Bottom** printed part.*
- *Insert the M8x10 in **L- Front Pulley House Bottom** printed part.*
- *Place M8x16 and M5x10 in their right location.*
- ***Screw them all to secure the XY frame***

Check stability: Once all the extrusions are secured, gently test the stability by applying light pressure or shaking the assembly. Ensure the extrusions are firmly attached and the panel remains stable.

STEP 5 Place the Aluminum XY Frame (Upper plate) Part 2

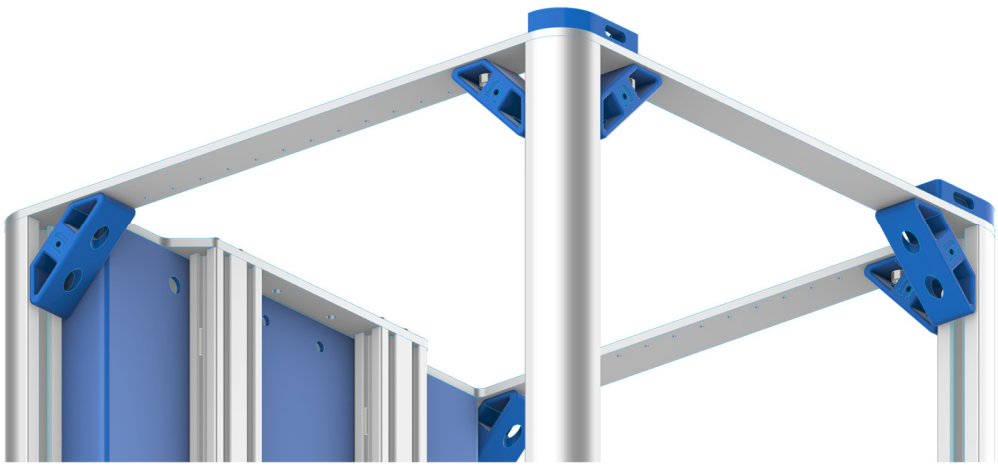

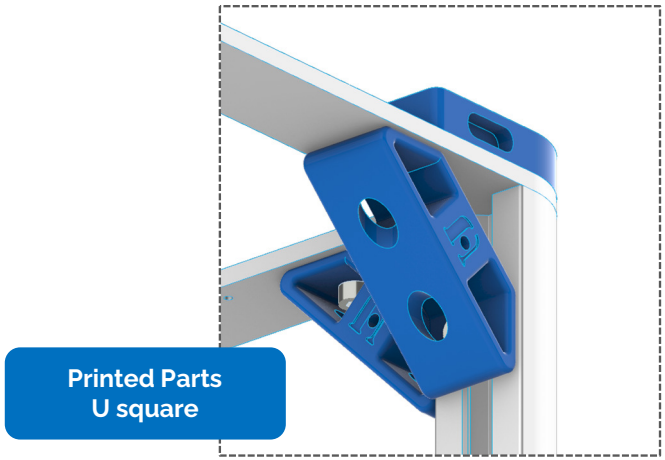

*Install **the U squares** to secure the **XY Frame** to the rounded **extrusions**.*

Repeat for all extrusions.

Check stability: Once all the extrusions are secured, gently test the stability by applying light pressure or shaking the assembly. Ensure the extrusions are firmly attached and the panel remains stable.

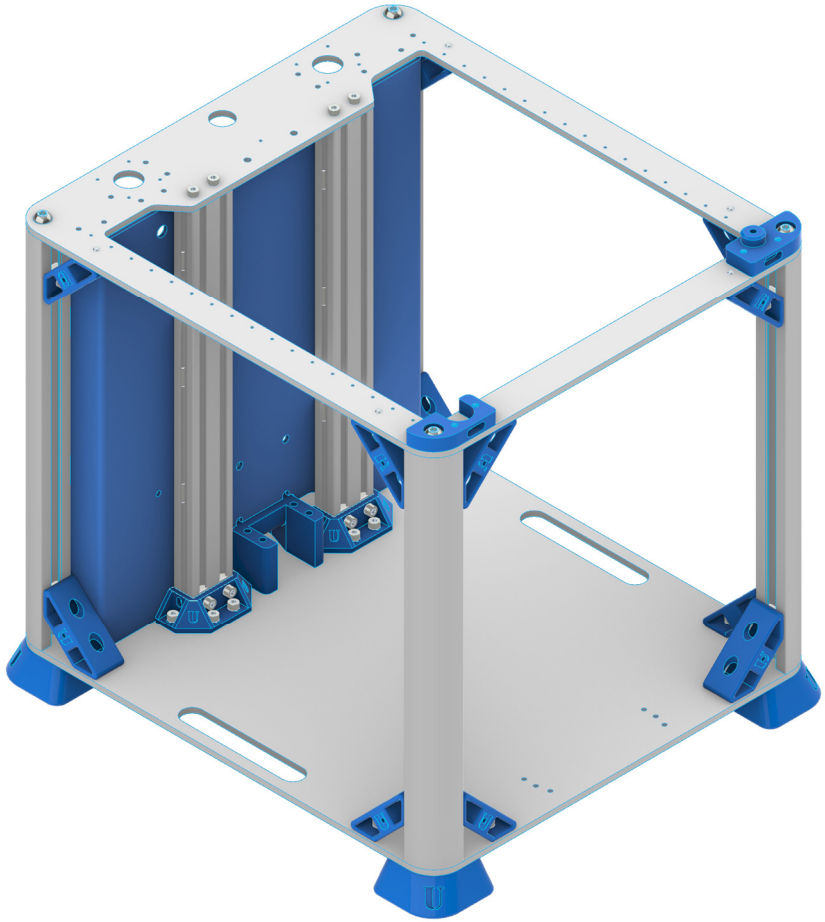

Once your frame is ready, you can proceed with the next steps of assembling your 3D printer.

Check stability: Gently shake or wiggle the 3D printer to ensure the machine footer is securely attached and the printer remains stable. Make any adjustments if necessary.

02. XY Frame

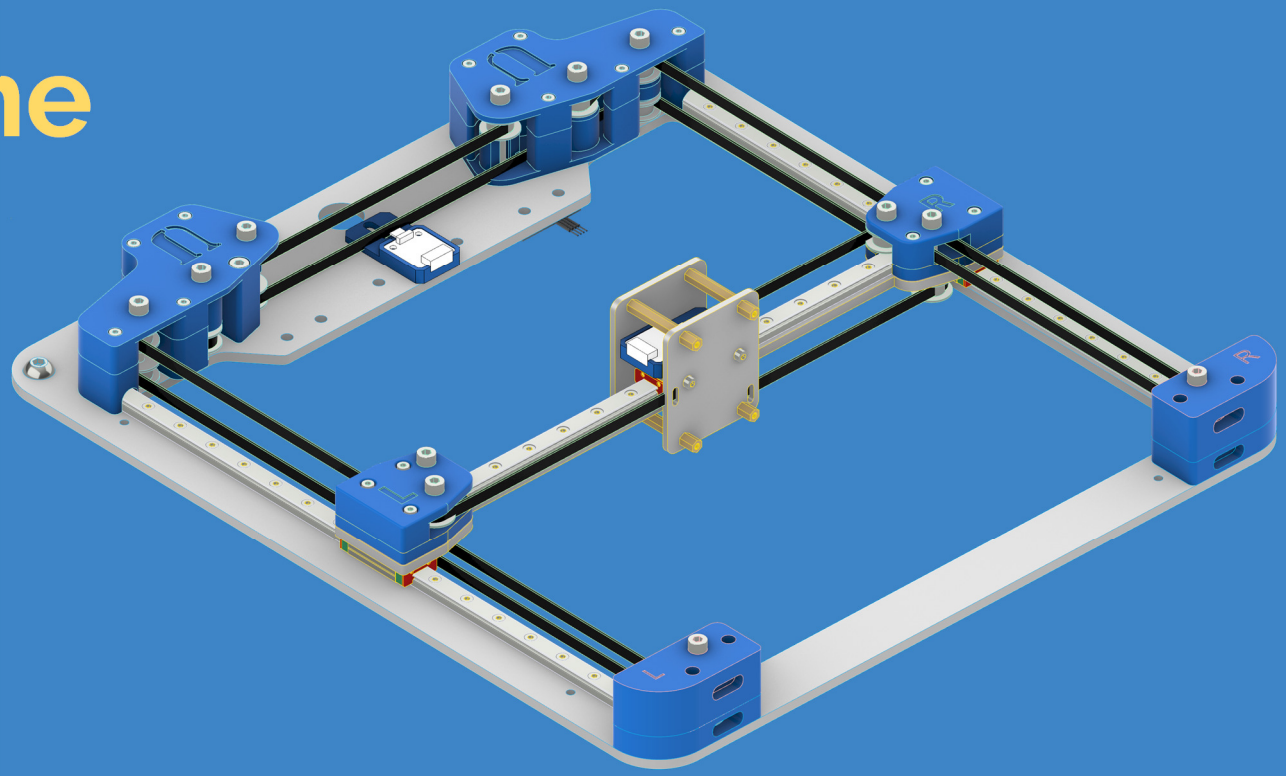

STEP 6 Install X Gantry + Y Rails

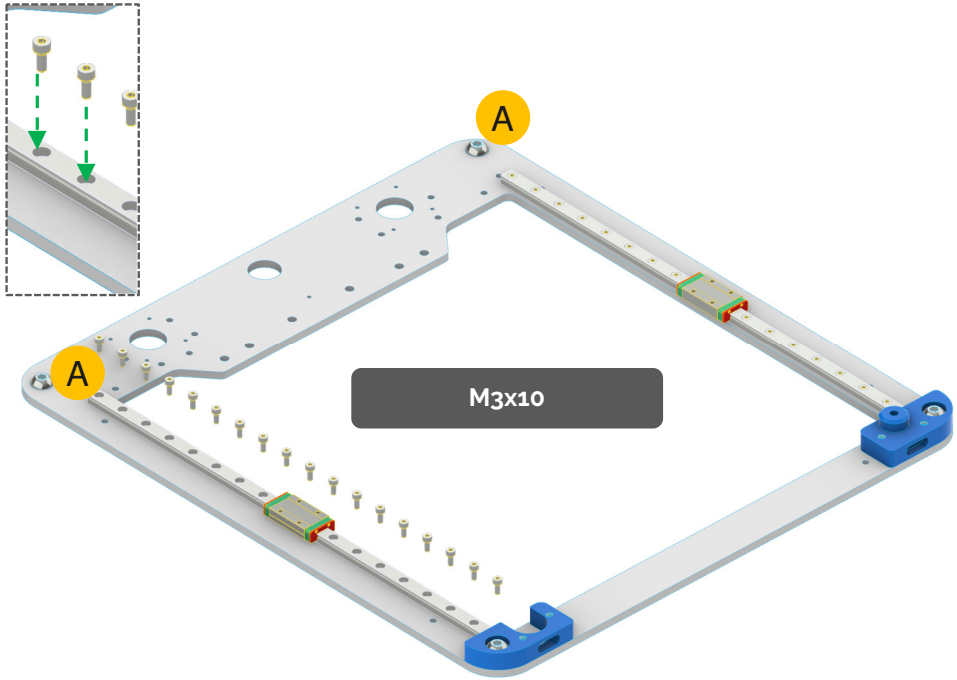

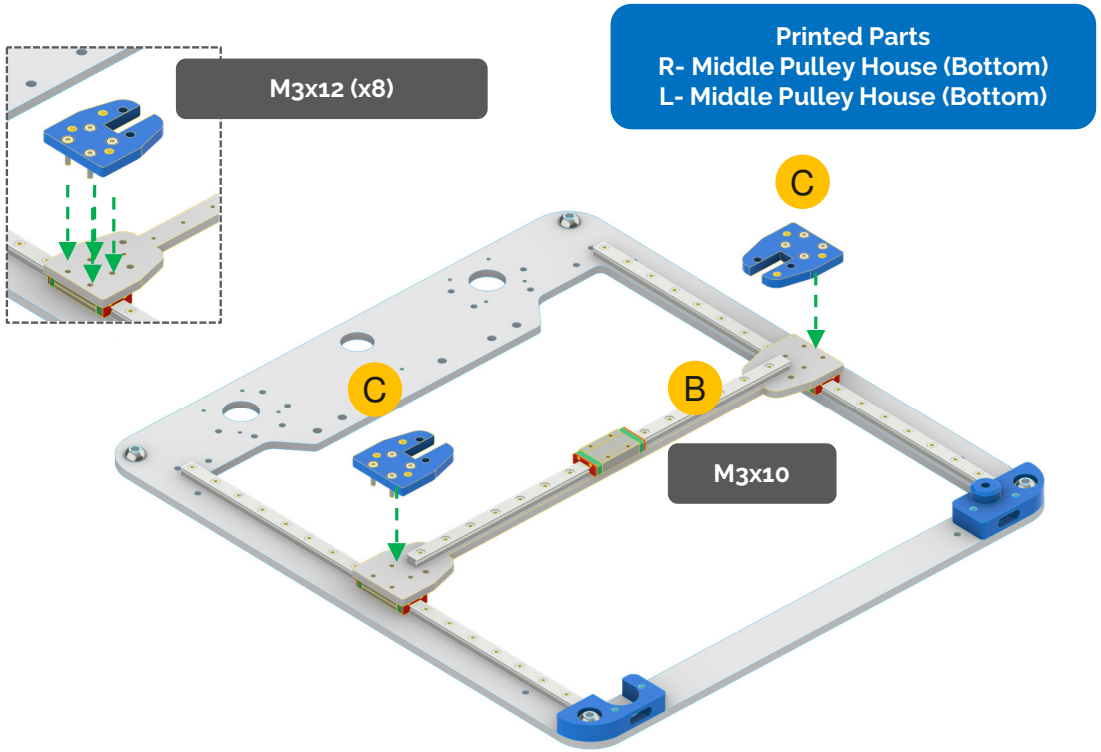

Place the Y-rails on the XY aluminum Frame. Insert the M3x10 to Secure them.

Do not allow the linear rail carriage to leave the end of the rail
Don't remove the plastic stops installed in the ends of the linear rail

- *Position the X-rail on the X gantry. Insert the **M3x10** to Secure it.*
- *Place the printed parts to secure the X-Gantry on Y rails. Tighten the **M3x12 (x4)**.*

STEP 7 Place the XY Motors (Left + Right)

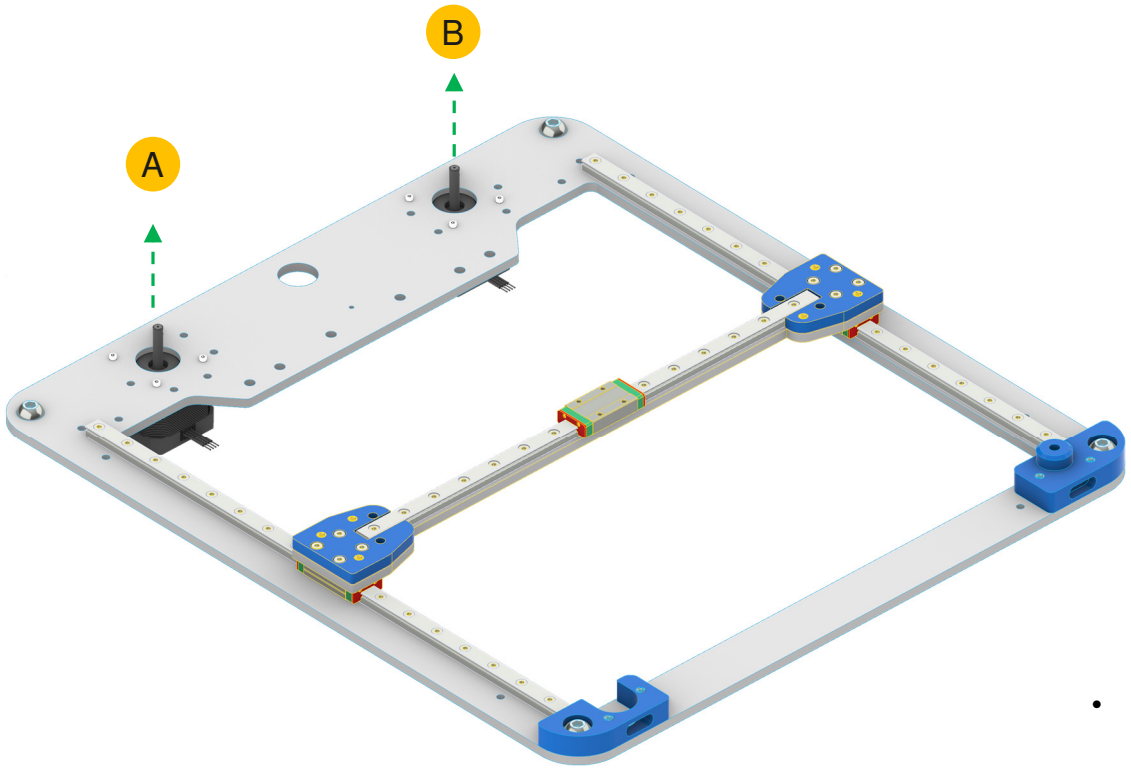

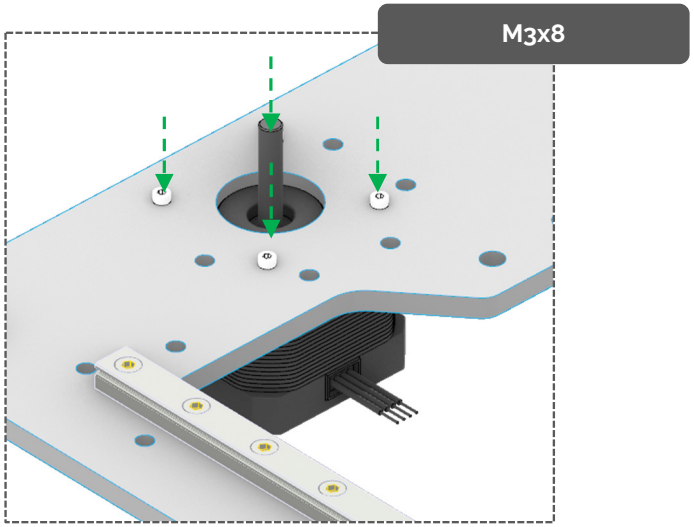

- *Position the XY Motors on the back of the XY frame. Secure Them with M3x10.*

STEP 8 Install the XY Pulleys House Transmission (Right)

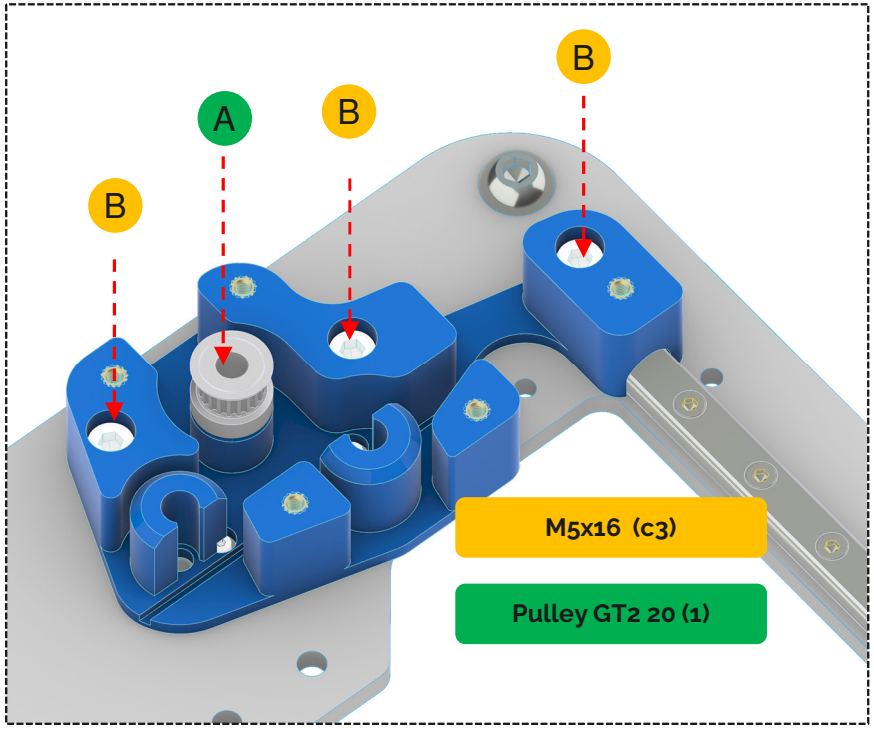

R- Pulleys House Transmission (Bottom)

A *Position the GT2-20 pulley on the motor axis. Tighten the set screws & make sure it sits flush against the motor axis.*

B *Insert The M5x16 as shown. Tighten to secure the* ***R- Pulleys House Transmission (Bottom)*** *to XY Aluminum Frame.*

Test the pulley: After tightening the set screws, check the pulley's stability by gently rotating it. Ensure it spins smoothly without wobbling or any excessive resistance.

STEP 8 Install the XY Pulleys House Transmission (Right)

D C *Insert the M5x40 in the **R- Pulleys House Transmission (Up)** printed part then position the Pulley in the screw axis.*

E *Insert the M5x40 in the **R- Pulleys House Transmission (Up) printed** part. Position the Pulley then the printed distancer and finally the pulleys in the screw axis.*

F *Insert The M3x20 as shown. Tighten to secure the **R- Pulleys House Transmission (Up)** to the bottom.*

Tighten M5x40 to secure pulleys to XY aluminum frame.

Test the pulley: After tightening the set screws, check the pulley's stability by gently rotating it. Ensure it spins smoothly without wobbling or any excessive resistance.
Avoid over-tightening to prevent damage to the pulley or the printed part.

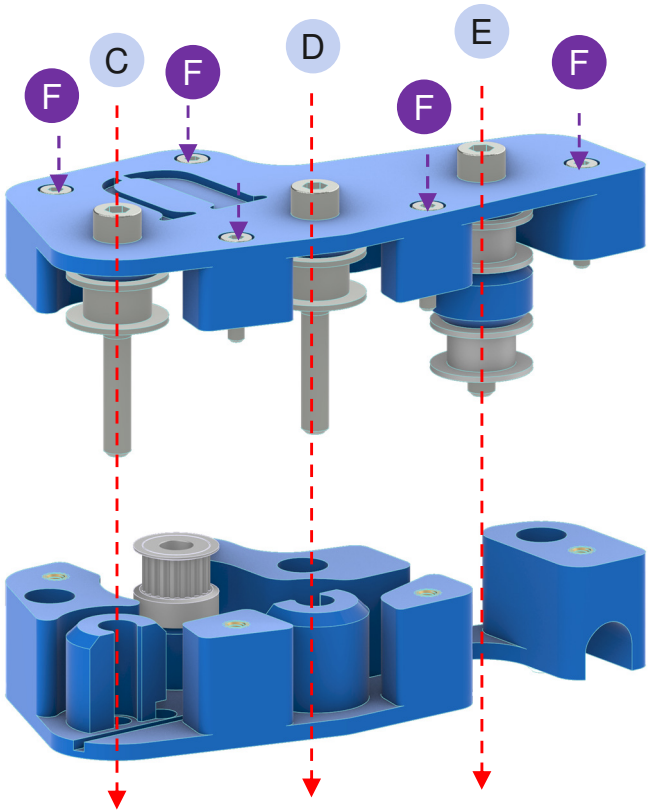

M5x40 (x3)

Pulleys (x4)

M3x20 (x5)

R- Pulleys House Transmission (Up/Bottom)
Distancer (x1)

STEP 9 Install the XY Pulleys House Transmission (Left)

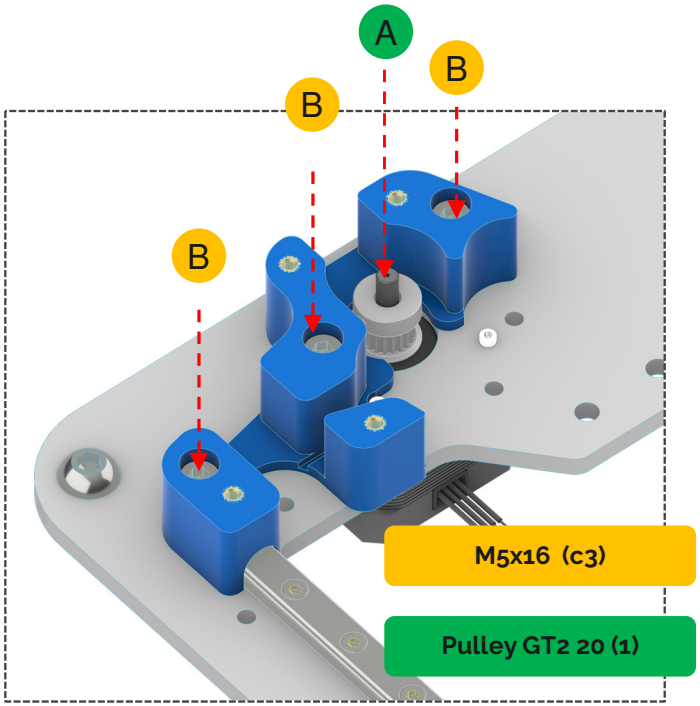

M5x40 (x3)

Pulleys (x4)

M3x20 (x5)

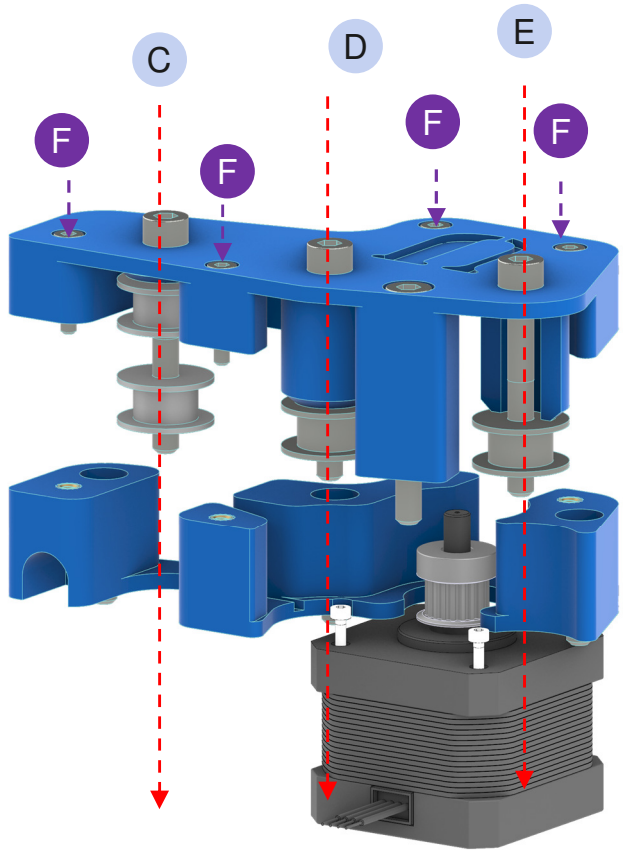

L- Pulleys House Transmission (UP/Bottom)

Follow the same instructions as Step 8

STEP 10 Install the Middle XY Pulleys House (Right)

R- Middle Pulleys house (UP)

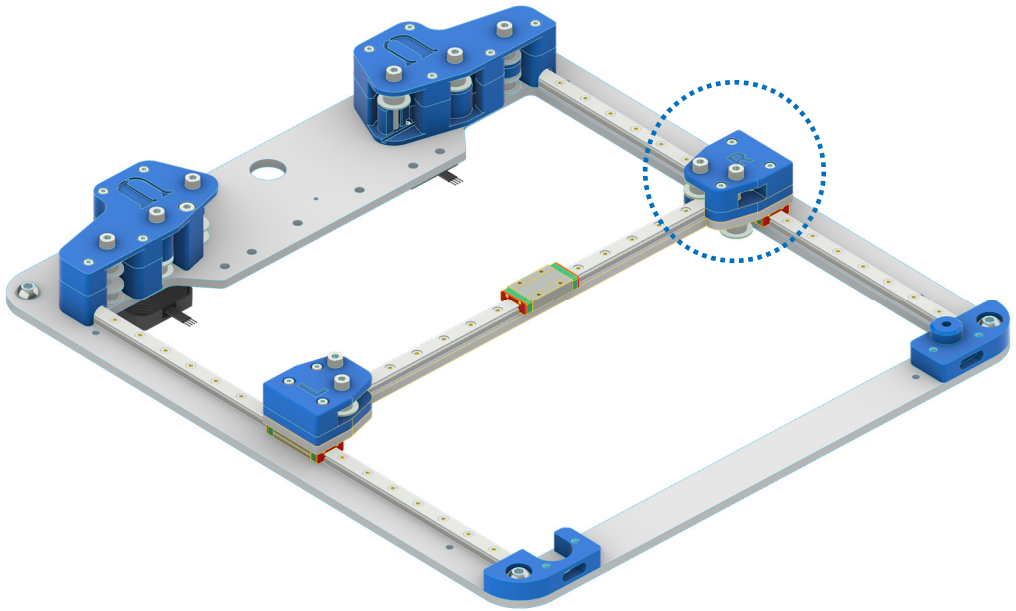

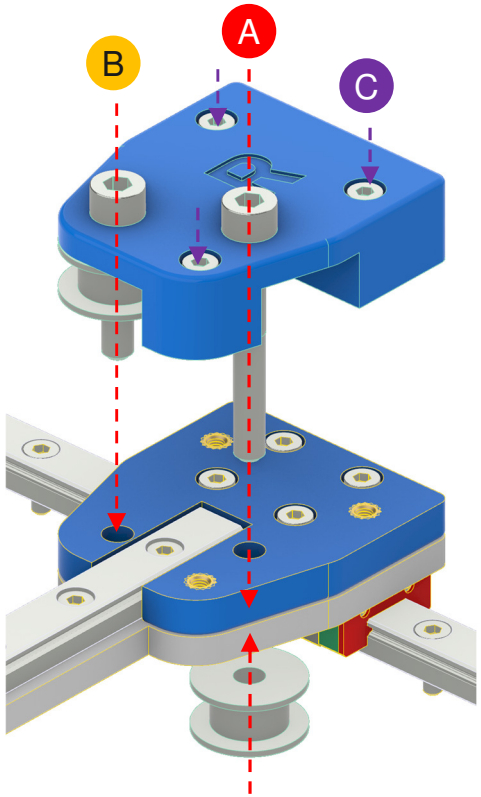

M5x40 (x1)

Pulleys (x2)

M3x14 (x3)

M5x25 (x1)

A B *Insert the **M5x40** & **M5x25** in the **mounting holes as shown** then position the Pulley in the screw axis.*

C *Insert the **M3x20** in the **R- Middle Pulleys House (Up)** printed part. Tighten to secure Upper Part / Bottom part*

STEP 10 Install the Middle XY Pulleys House (Left)

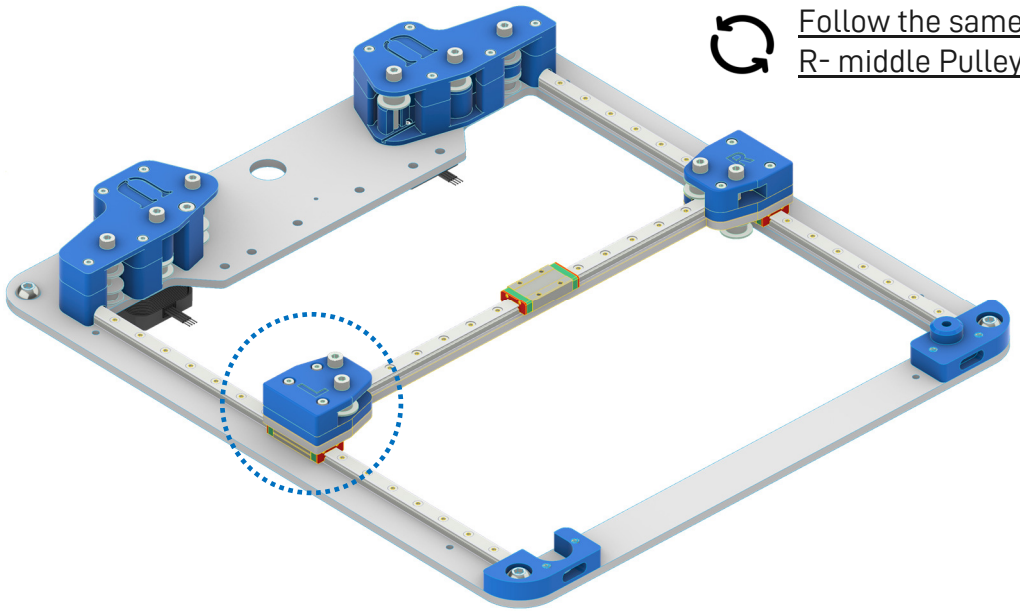

L- Middle Pulleys house (UP)

Follow the same instructions as the R- middle Pulleys house.

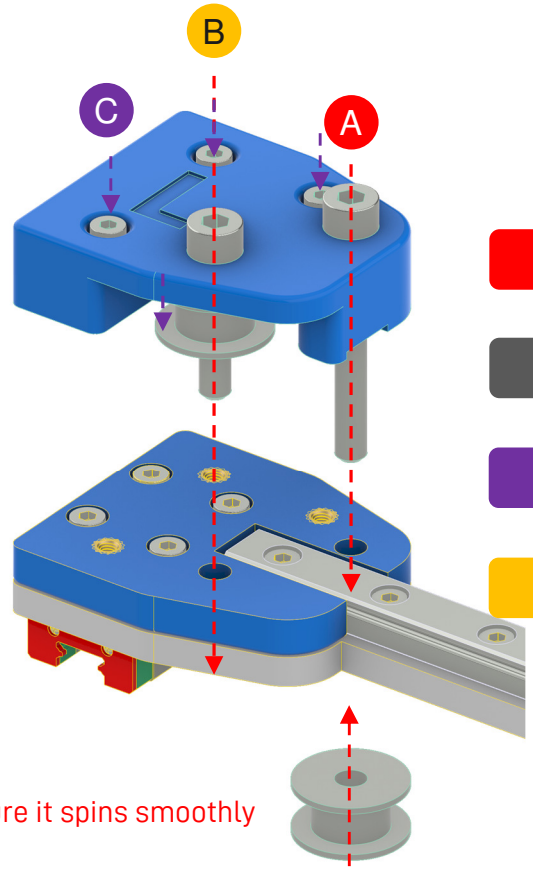

M5x40 (x1)

Pulleys (x2)

M3x14 (x3)

M5x25 (x1)

Test the pulley: After tightening the set screws, check the pulley's stability by gently rotating it. Ensure it spins smoothly without wobbling or any excessive resistance.

Avoid over-tightening to prevent damage to the pulley or the printed part.

STEP 11 Install the Front XY Pulleys House (Right)

R- Front Pulleys house (UP)

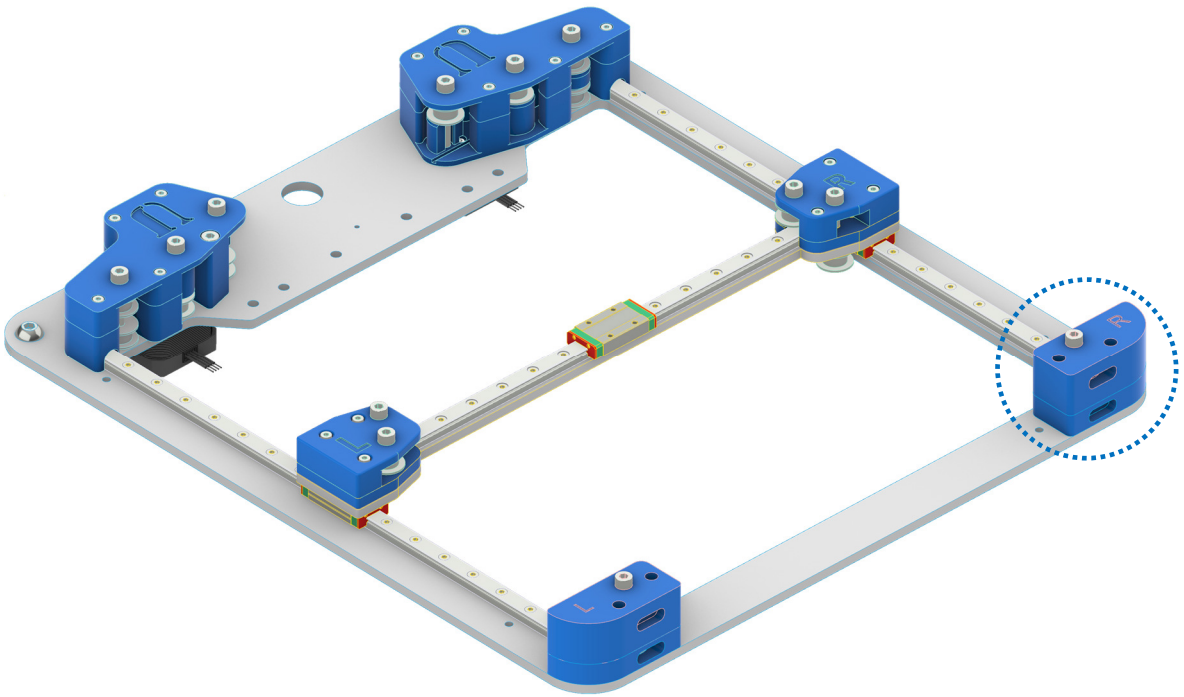

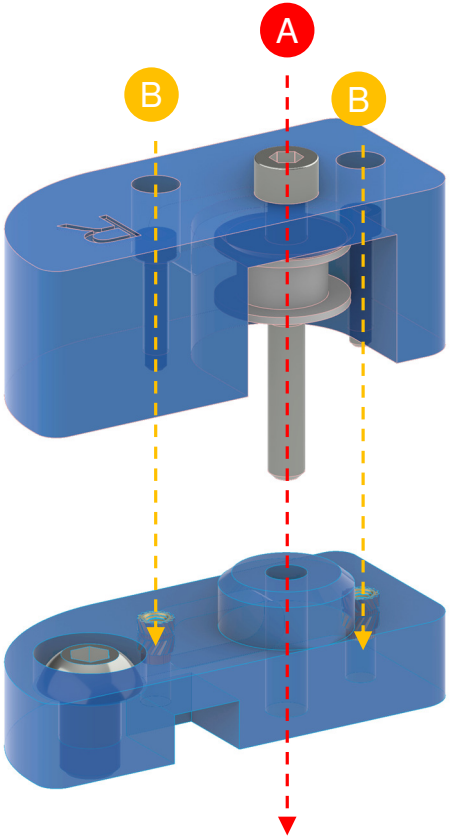

M5x40 (x1)

Pulleys (x2)

M3x20 (x3)

Follow the same instructions as Step 10

STEP 11 Install the Front XY Pulleys House (Left)

L- Front Pulleys house (UP)

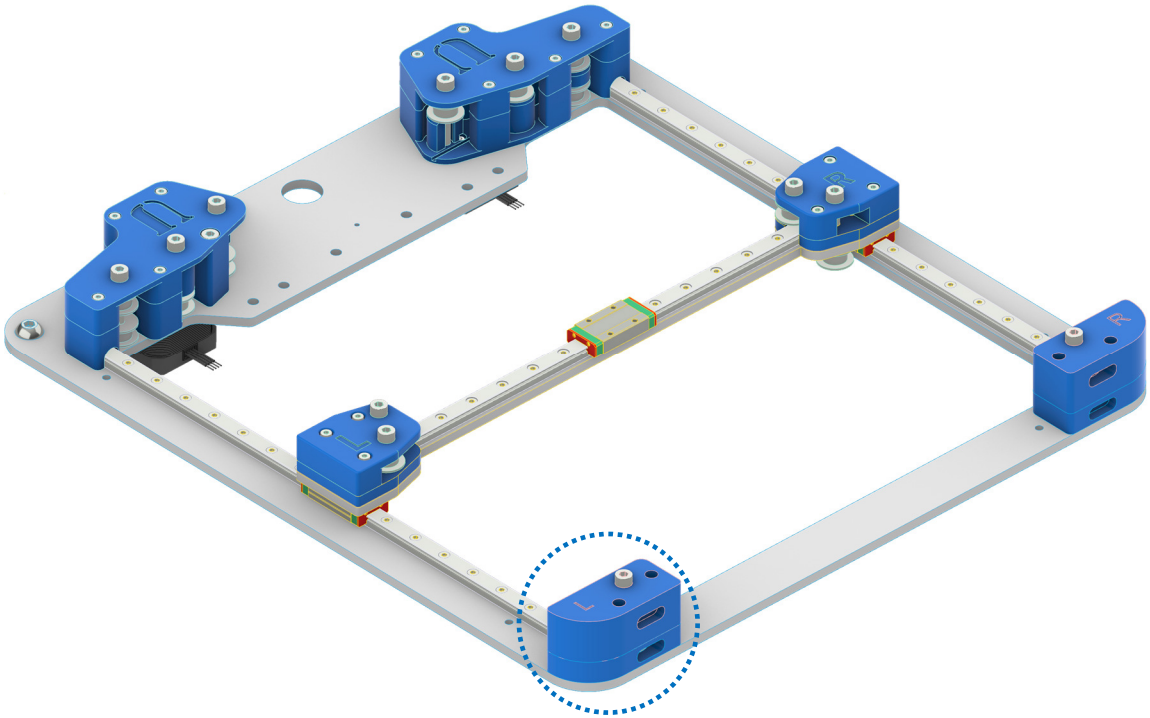

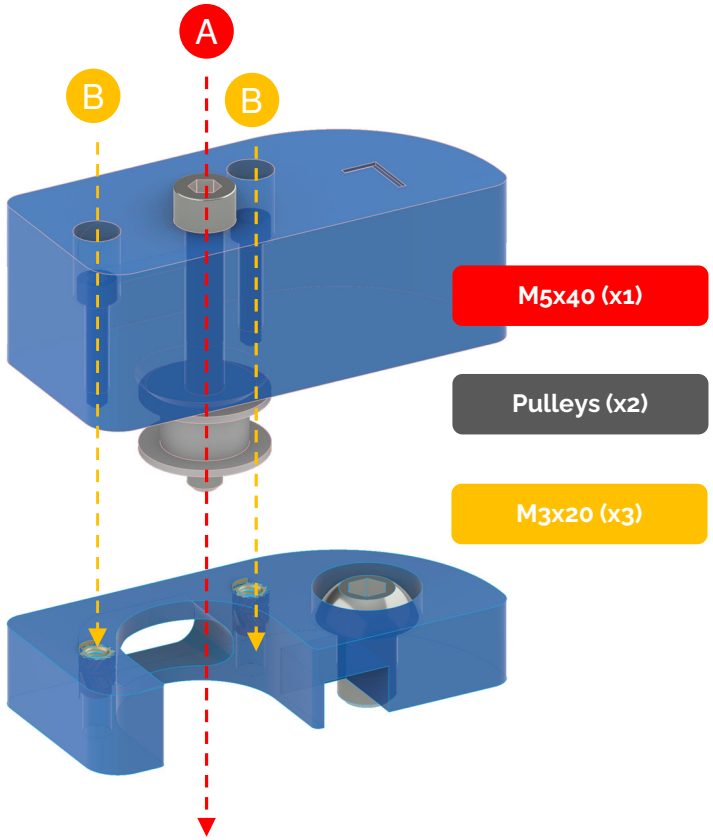

Follow the same instructions as Step 10

STEP 12 Install X- HEAD Mount Extruder (Part1)

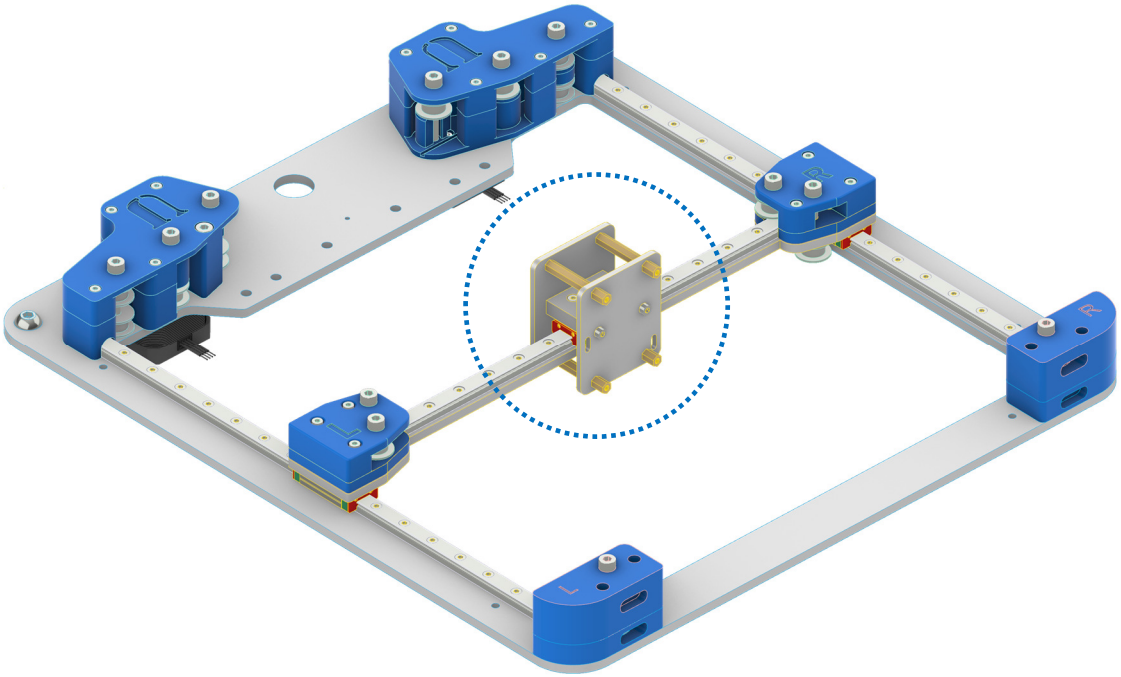

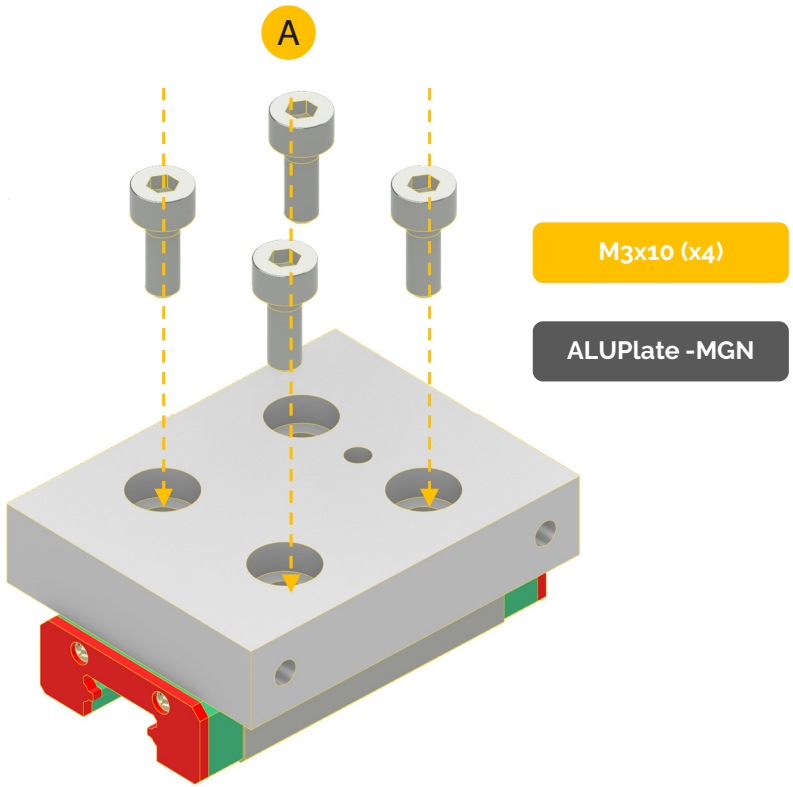

A *Insert the M5x25 in the **mounting holes as shown**. Tighten to secure the ALUPlate to the MGN-X gantry.*

STEP 12 Install X- HEAD Mount Extruder (Part2)

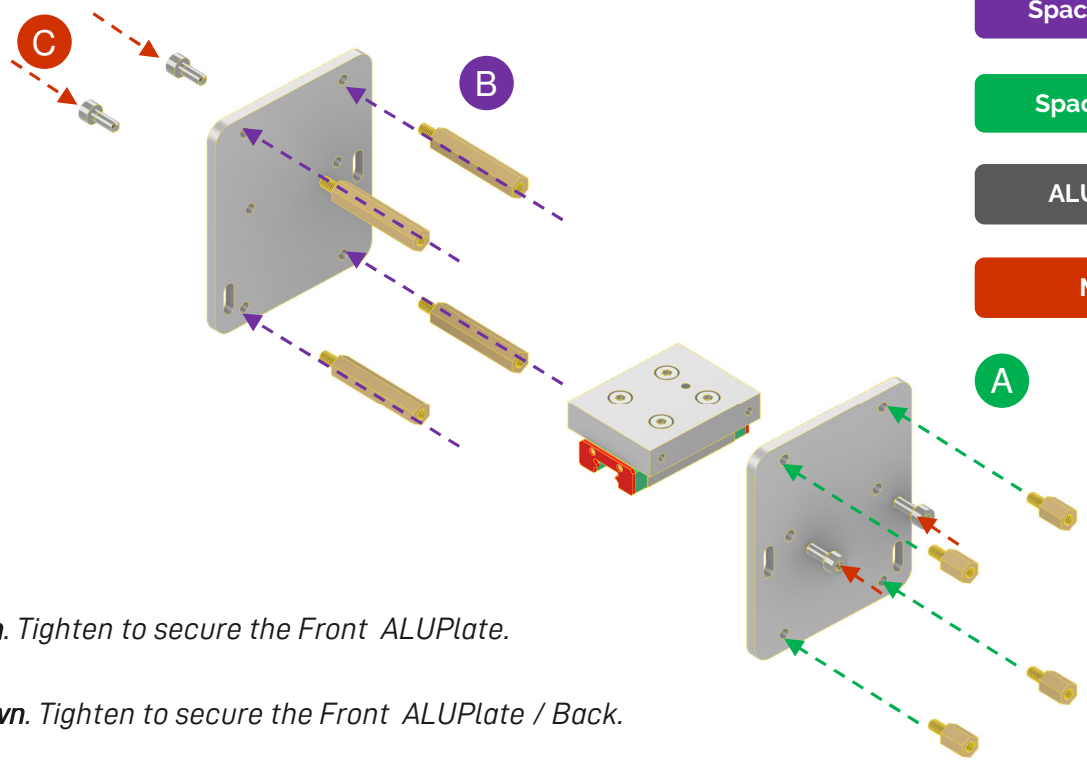

Spacers 40mm (x4)

Spacers 8mm (x4)

ALUPlate -MGN

M3x10 (x4)

A *Insert the **8mm spaces** on the **mounting holes as shown**. Tighten to secure the Front ALUPlate.*

B *Insert the **40 mm spaces** on the **mounting holes as shown**. Tighten to secure the Front ALUPlate / Back.*

C *Insert the **M3x10** on the **mounting holes as shown**. Tighten to secure Them on the MGN-Plate.*

STEP 13 Routing XY belt

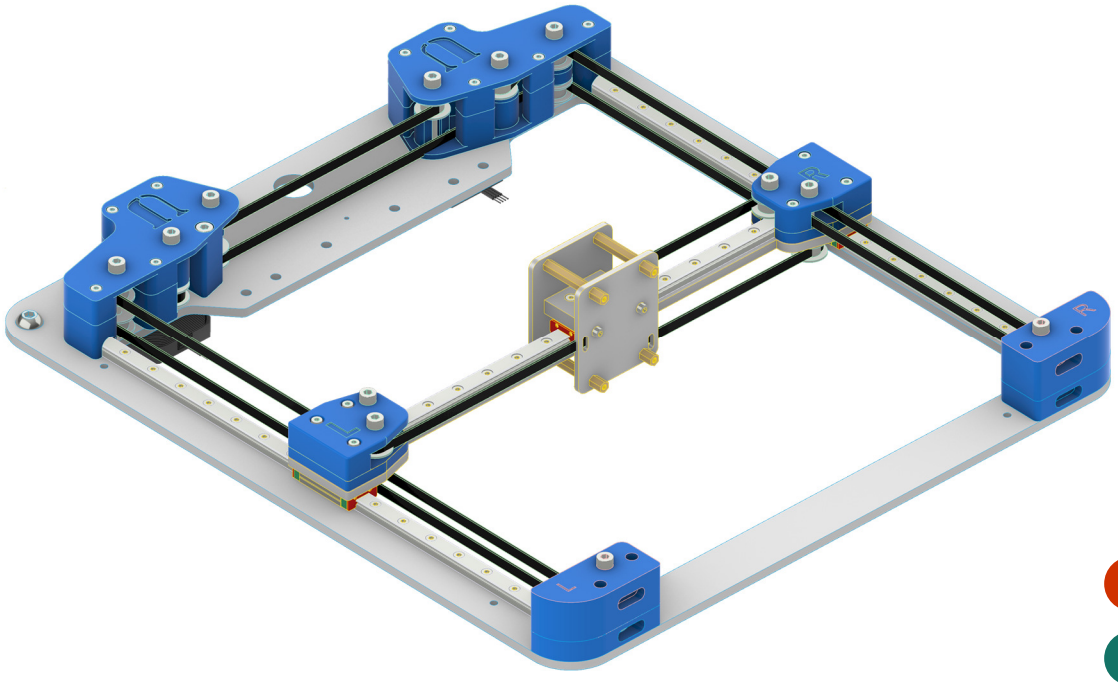

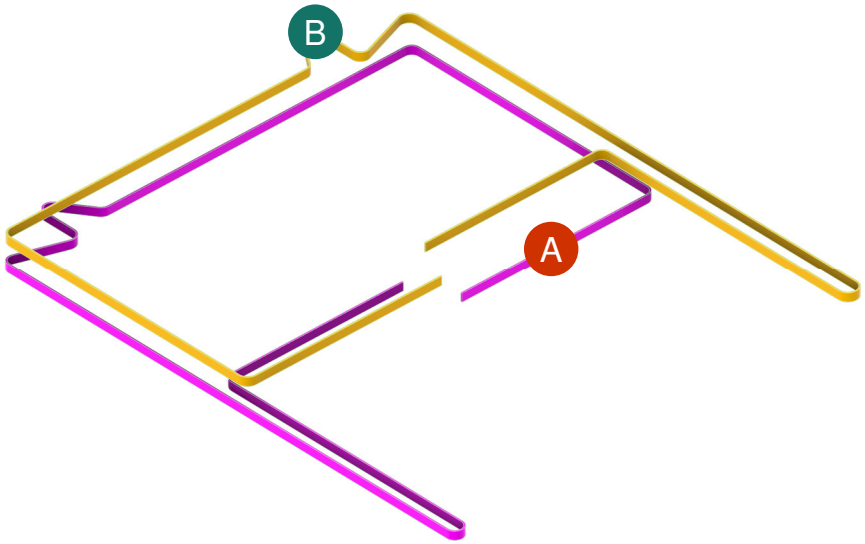

A Lower Belt

B Upper Belt

STEP 13 Routing XY belt

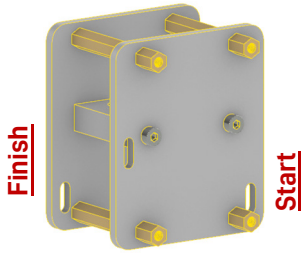

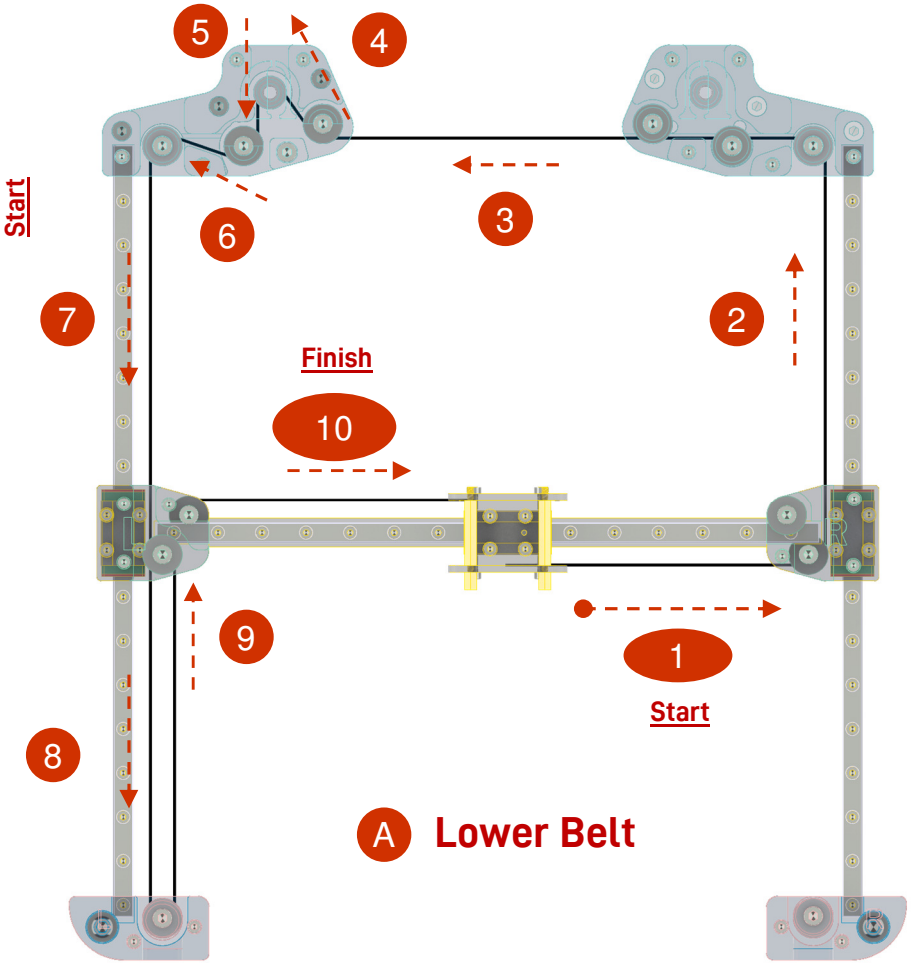

Start

1 Take the **loose end of the Core XY belt**.
Feed it in the **right hole X- HEAD Mount** .
Tighten with **2x cable clamps**.

X X X Follow the **routing Belt path** as shown.
Make sure that the belt pitch is facing GT2x20

10 Finish

Once finish routing, Tighten with **2x cable clamps** in **the left hole X- HEAD Mount** .

STEP 13 Routing XY belt

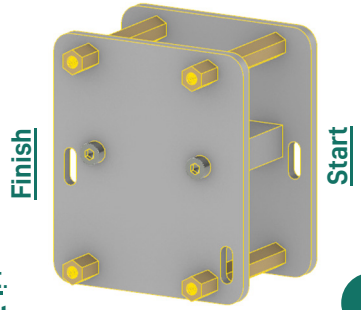

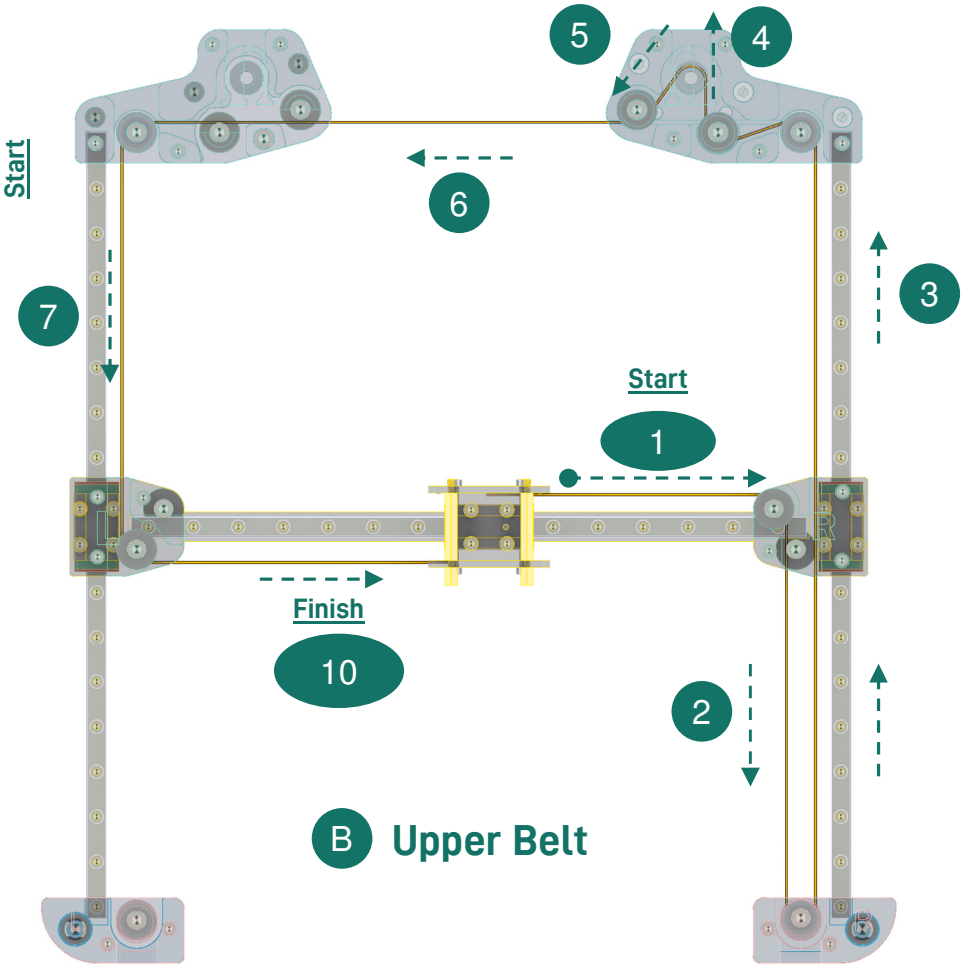

Start 1 Take the **loose end of the Core XY belt**.
Feed it in the **right hole X- HEAD Mount** .
Tighten with **2x cable clamps**.

X X X Follow the **routing Belt path** as shown.
Make sure that the belt pitch is facing GT2x20

10 Finish Once finish routing, Tighten with **2x cable clamps** in **the left hole X- HEAD Mount** .

STEP 14 Place The XY Endstops

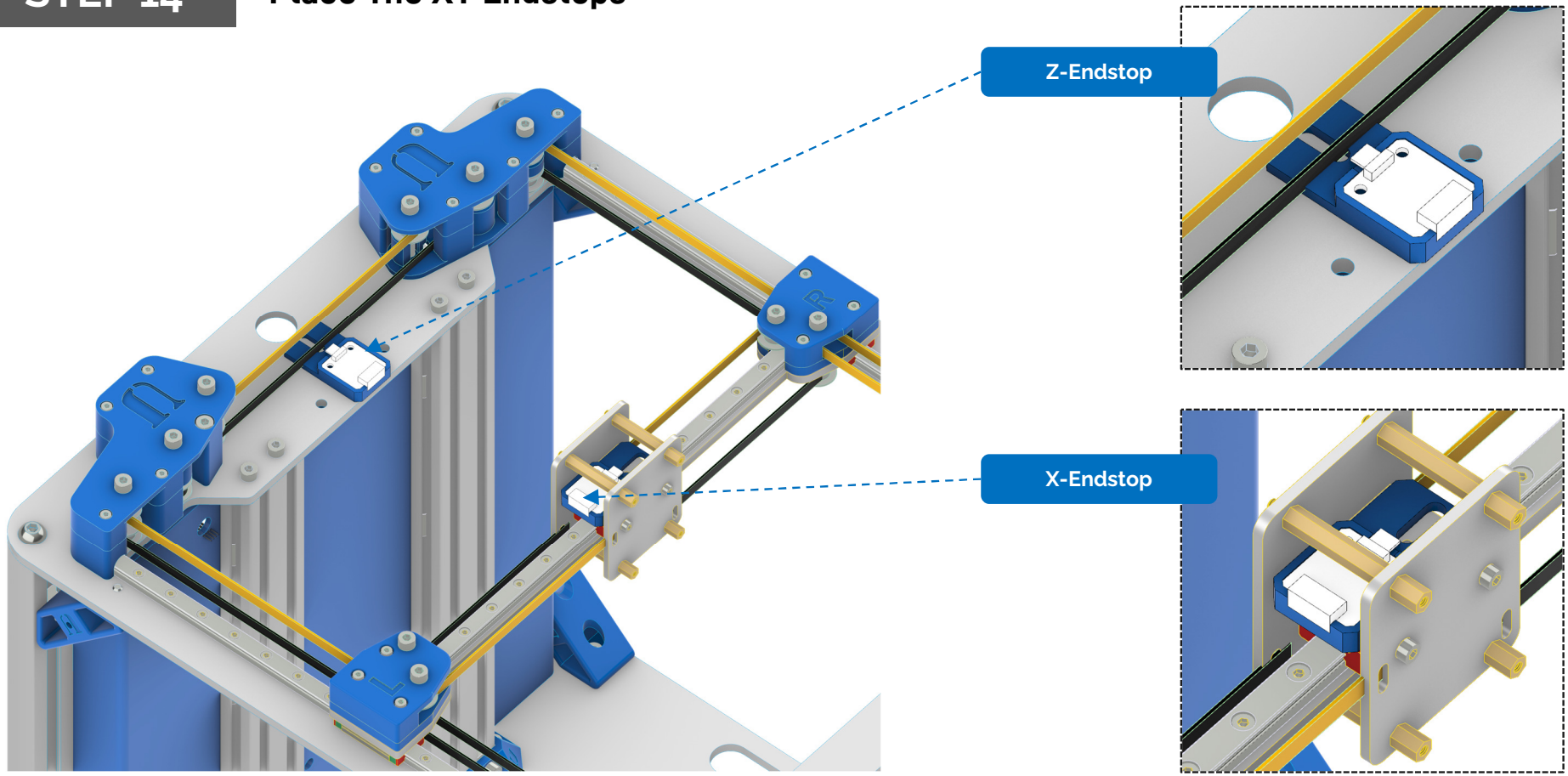

Check belt alignment and tension: Double-check the alignment of the belt and ensure it is parallel to the axis or carriage it moves along. Verify that the tension is balanced across the entire belt loop and that it moves smoothly without excessive slack or tightness.

Test belt movement: Finally, perform a test movement of the printer's axis or carriage to verify that the belt moves smoothly and without any binding or skipping. Make any necessary adjustments to the belt tension or alignment if issues arise.

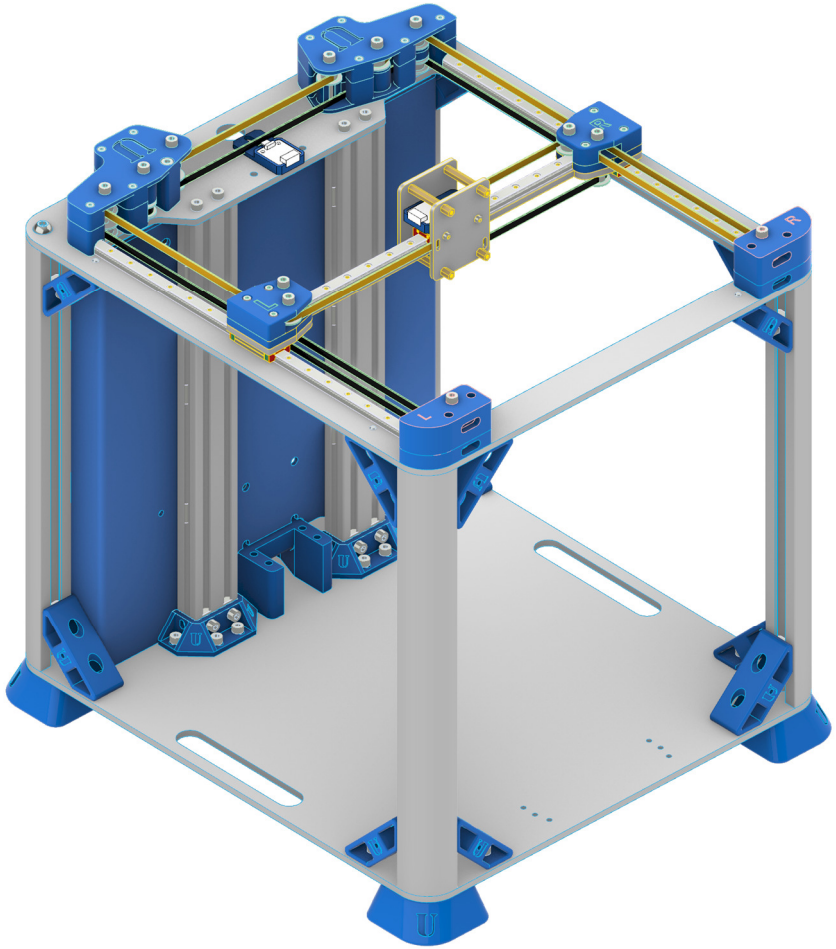

XY System ready !

03. Z - Axis

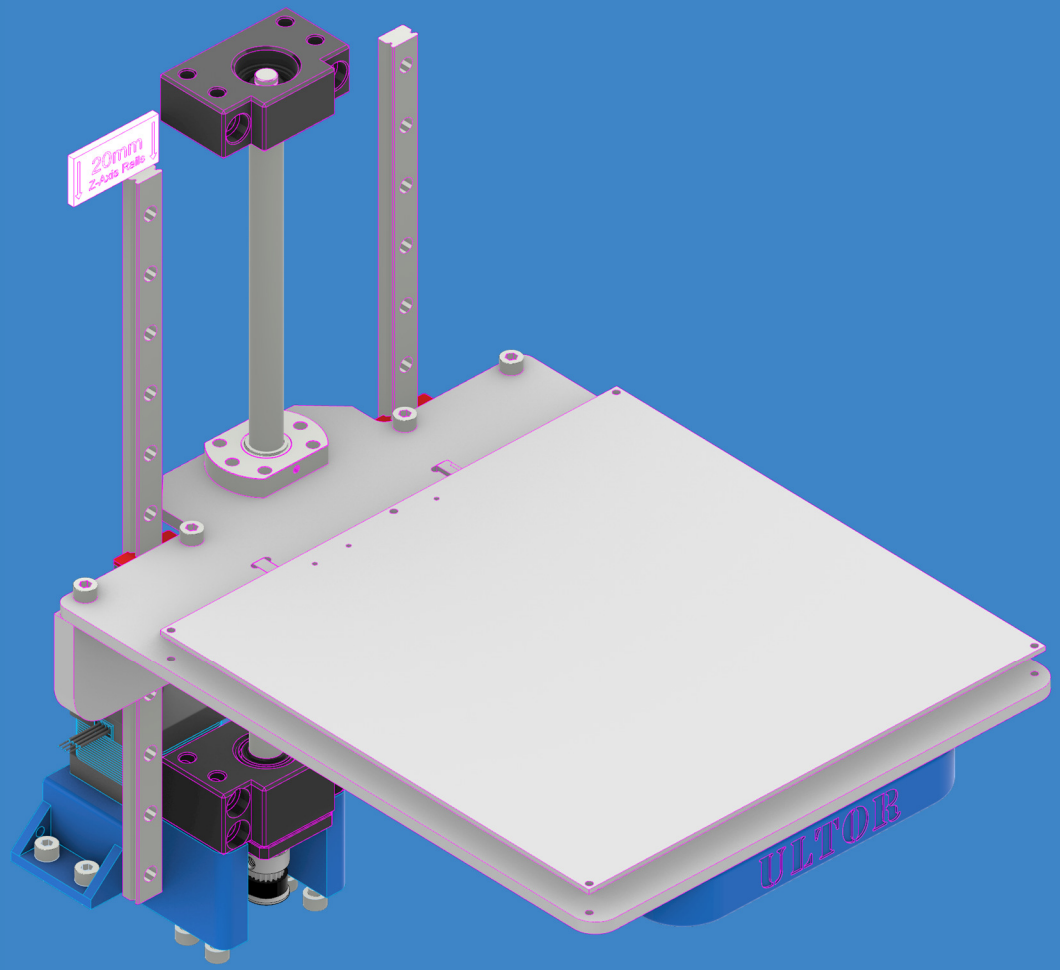

STEP 15 Prepare Z-axis Motor support

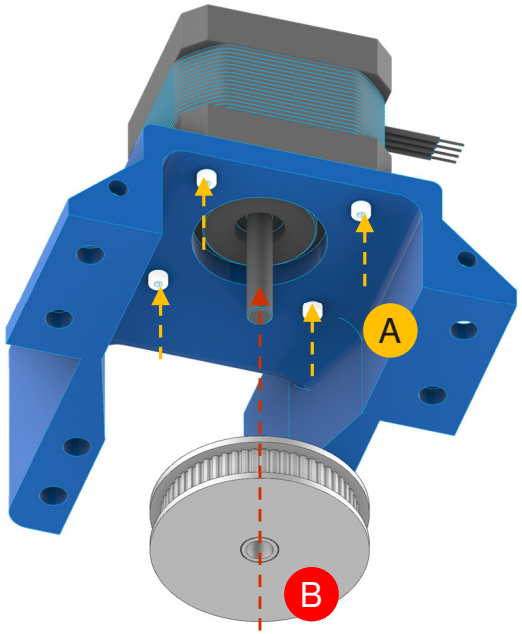

- Z-axis Motor support
- Pulley GT
- M3x10 (x4)
- M5x10 (x8)

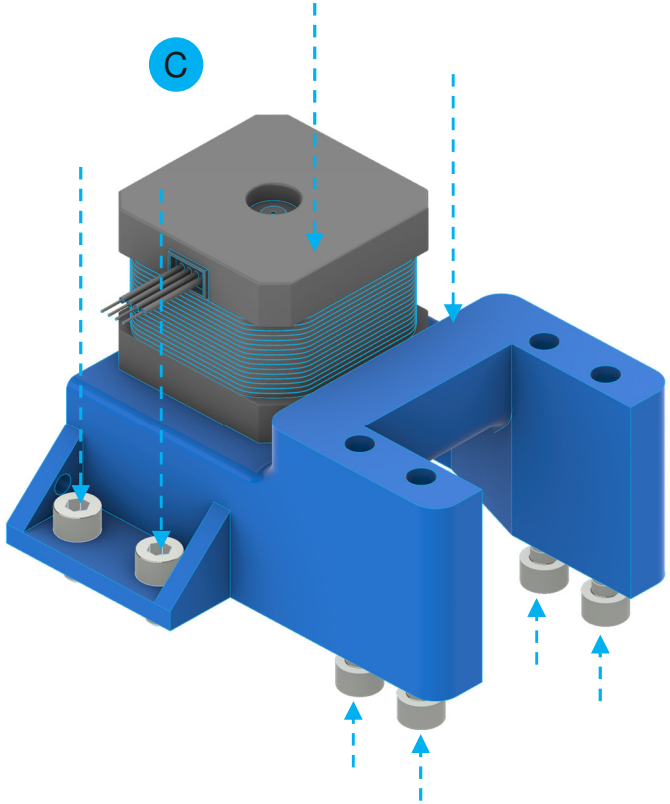

A *Secure the motor to the z-axis support (printed part) using the M3x10.*

B *Position the GT pulley on the motor axis. Tighten the set screws & make sure it sits flush against the motor axis.*

B *Secure the system to the aluminum bottom base. Tighten M5x10.*

STEP 16 Prepare Heated-Bed support

Bed Handle	M5x10 (x4)
Aluminum Bed (parts)	M3x10 (x6)
M5x10 (x2)	Ball screw (SFU)

B A *Secure the Aluminum Bed Parts using M5x10 & M3x10 screws. Tighten all screws together.*

C *Position the Bed handle. Tighten the set screws & make sure it sits flush against the aluminum supports.*

F *Slowly insert the ball screw into the designated mounting point, applying gentle pressure then secure it to the aluminum plate*

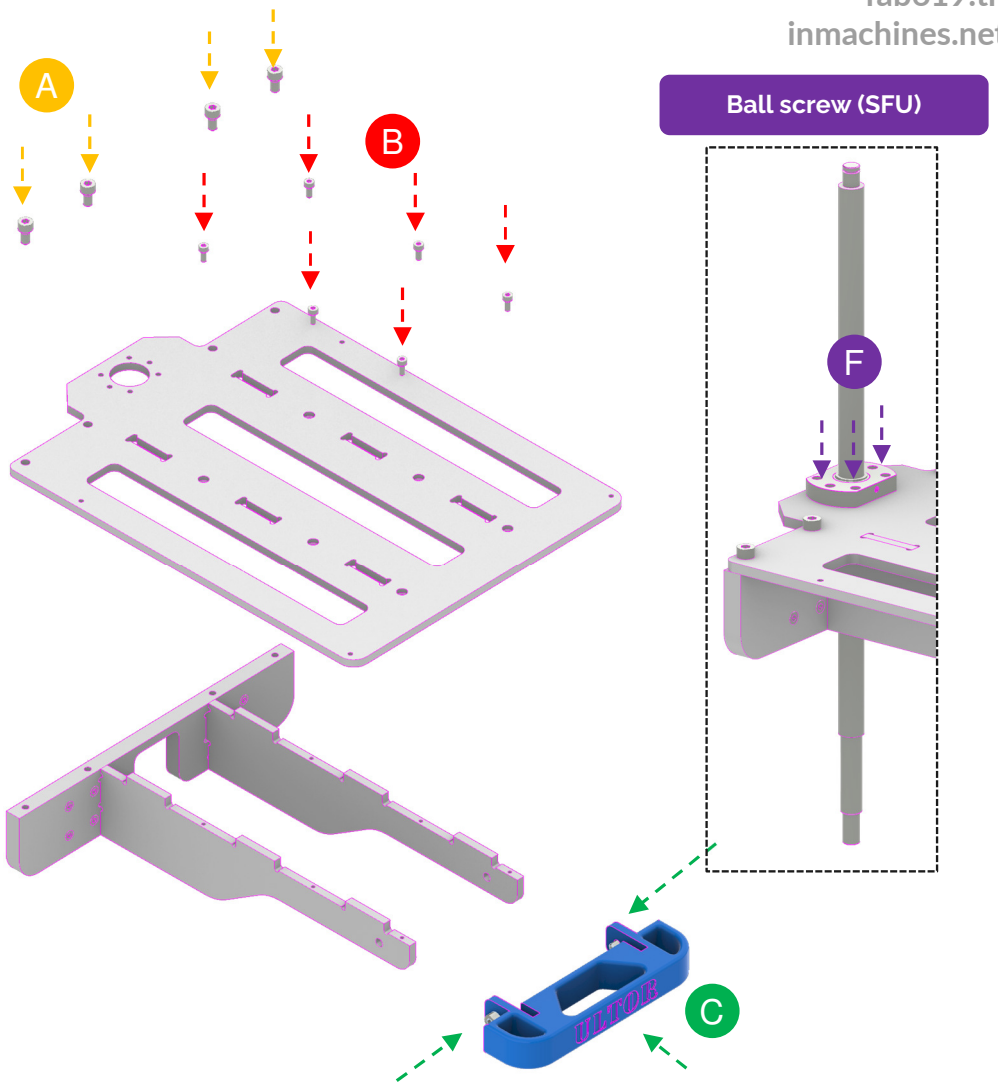

E *Install the BK10 Bearing inside the ball screw extremities. Once the bearing is positioned correctly, use the provided mounting hardware (screws, bolts, etc.) to secure it in place. Ensure that the bearing is tightly fastened to prevent any unwanted movement.*

Verify alignment and movement: Double-check the alignment of the bearing and ensure it moves freely without any obstructions or binding. Rotate the bearing to confirm smooth operation.

Verify alignment and movement: Double-check the alignment of the bearing and ensure it moves freely without any obstructions or binding. Rotate the bearing to confirm smooth operation.

F *Position the GT2 pulley on the ball screw axis. Tighten the set screws & make sure it sits flush against the axis.*

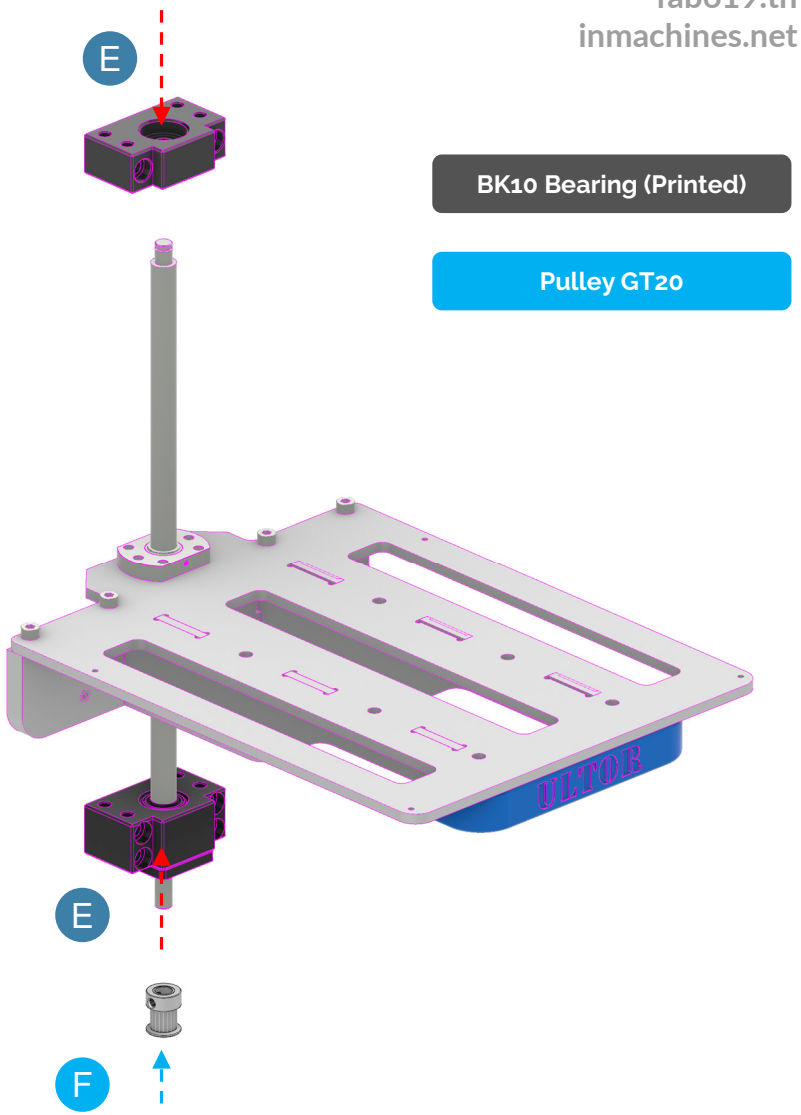

STEP 17 Install the Z-axis MGN-Rails

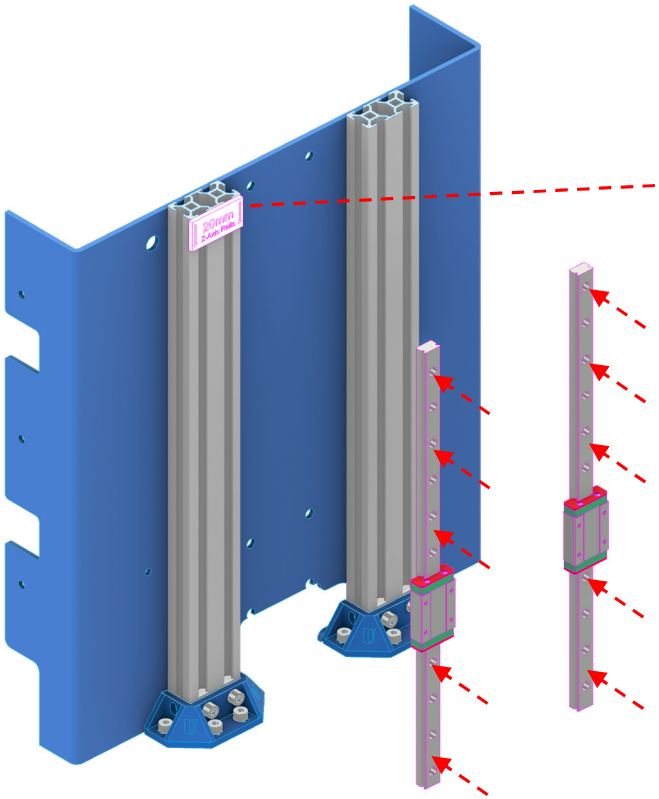

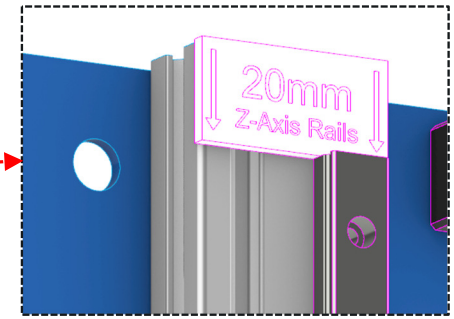

M3x8 + T-Nut R6

E *Place the Z-axis MGN-Rails onto the aluminum extrusions at the desired height and orientation. Align them parallel to each other and perpendicular to the printer's base.*
Tighten the M3x8 to secure them.

Verify alignment and movement: Check the alignment of the MGN-Rails and ensure they move smoothly along the extrusions without any binding or obstruction. Make any necessary adjustments to ensure smooth movement.

STEP 17 Finish the Z-axis

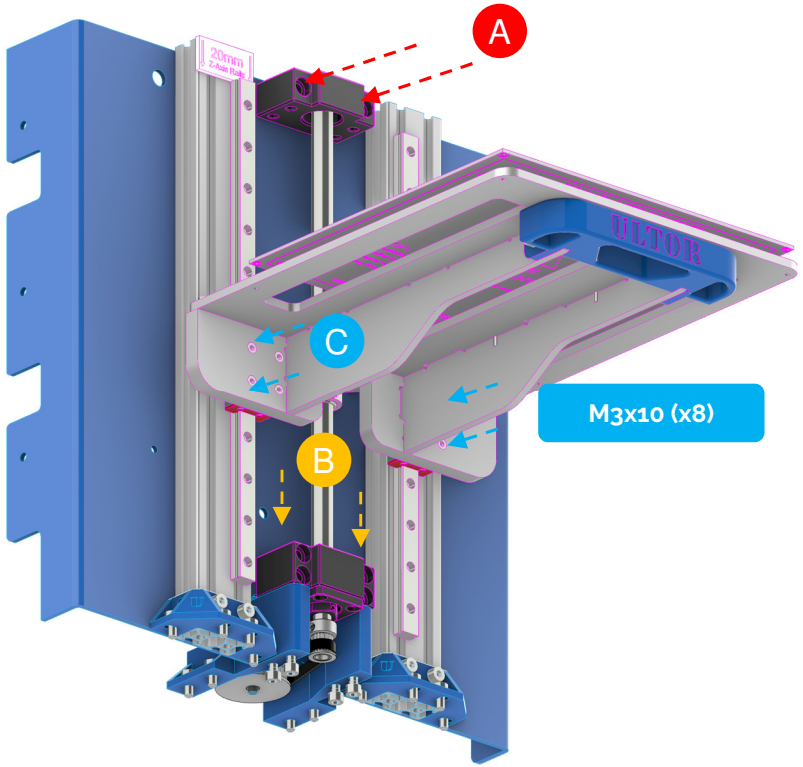

A *Secure the Upper BK10 on Electronic panel. Tighten the screws and make sure it sits flush against panel.*

B *Secure the lower BK10 on Z-axis support. Tighten the screws and make sure it sits flush against printed part.*

C *Secure the aluminum bed on the MGN- RAIL using M3x10 screws.*

Tighten the Z-Belt if necessary.

Test the Z-axis movement: Once the MGN-Rails are securely attached, test the Z-axis movement by manually moving the printer's carriage or axis up and down. Ensure that the MGN-Rails provide smooth and stable movement.

Check belt alignment and tension: Double-check the alignment of the belt and ensure it is parallel to the axis or carriage it moves along. Verify that the tension is balanced across the entire belt loop and that it moves smoothly without excessive slack or tightness.

Test belt movement: Finally, perform a test movement of the printer's axis or carriage to verify that the belt moves smoothly and without any binding or skipping. Make any necessary adjustments to the belt tension or alignment if issues arise.

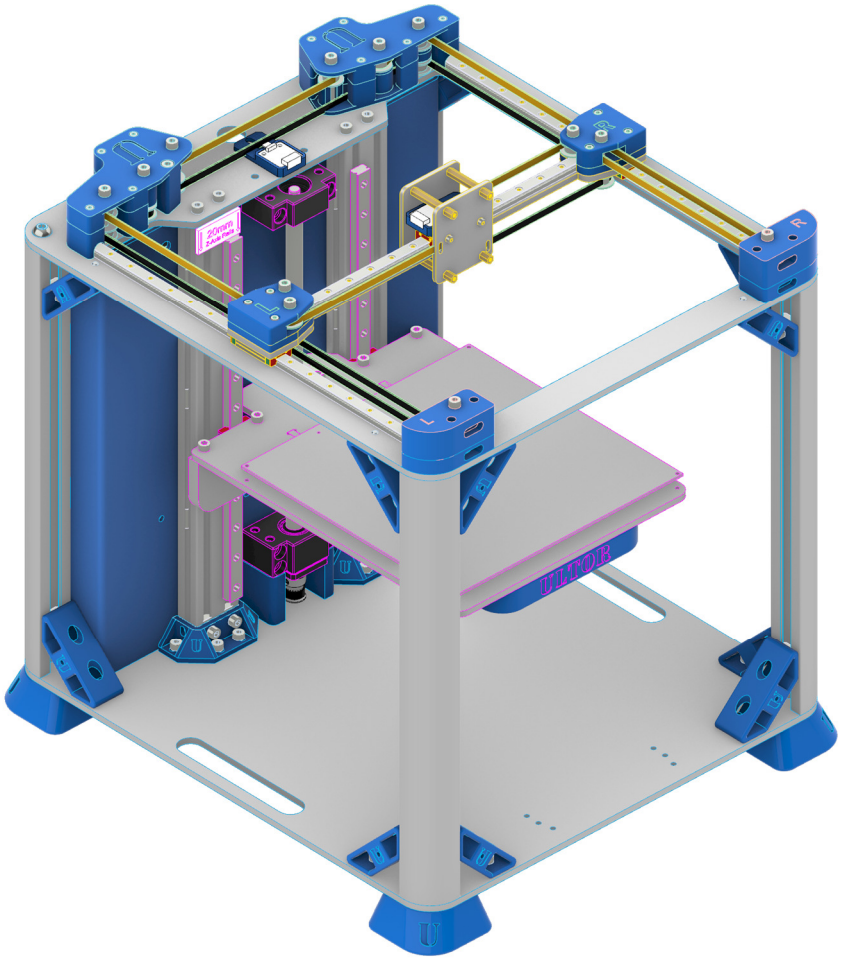

XY & Z System ready !

04. Head-Mount

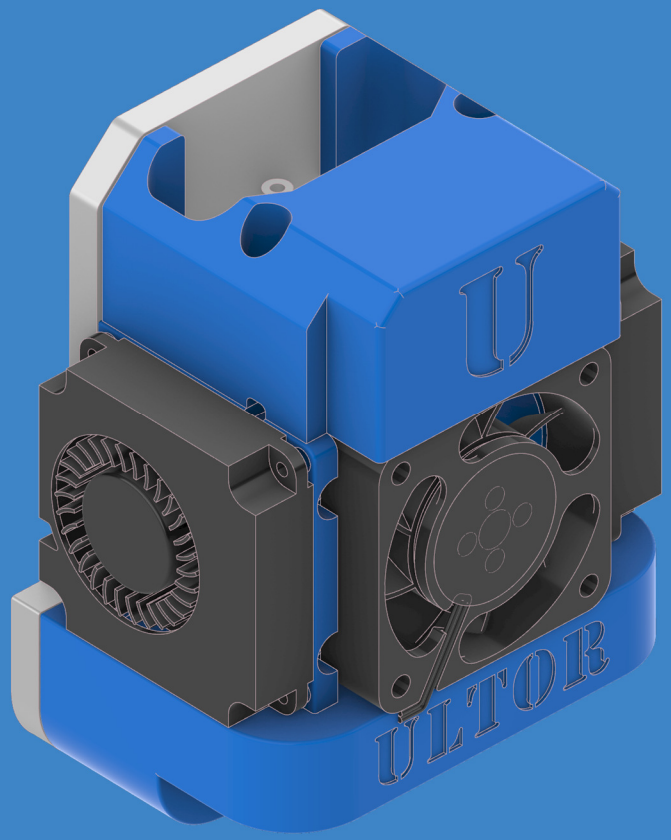

STEP 18 Install the Head-Mount (Part1)

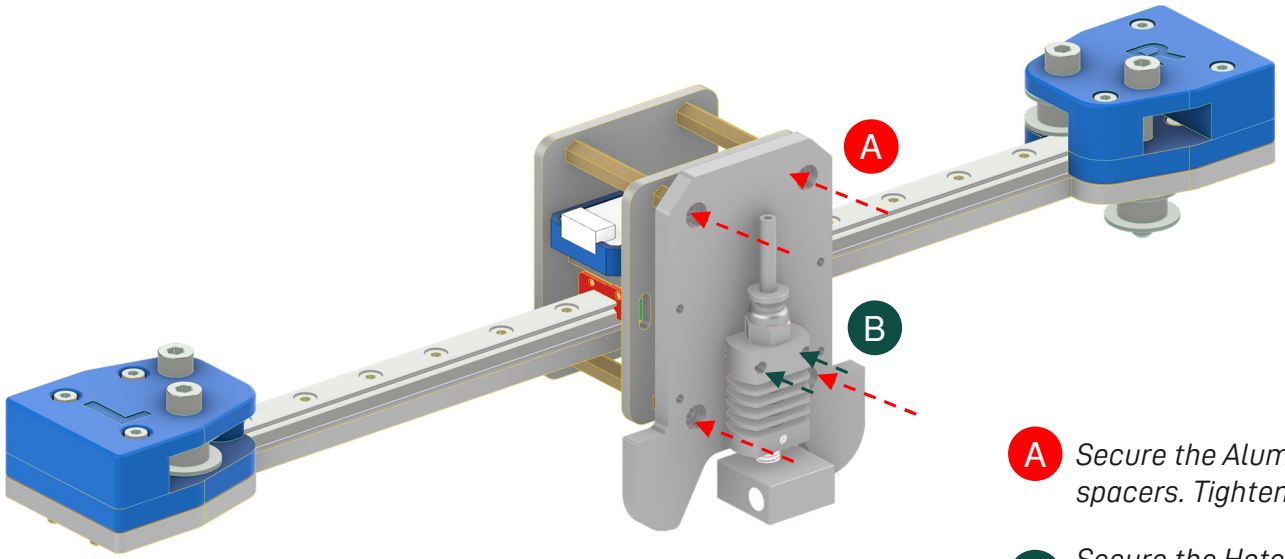

M3x8 (x4)

M3x14 (x2)

Aluminum Head plate

A *Secure the Aluminum head plate with* ***M3x8*** *screws to the front spacers. Tighten the screws and make sure it sits flush against.*

B *Secure the Hotend with* ***M3x14*** *on Aluminum head plate. Tighten the screws and make sure it sits flush against.*

Printed Parts (x2)	Fan 40x40 + M2x12 (x2)
M3x14 (x2)	Fan turbo + M2x12 (x2)
M3x25 (x4)	

A *Secure **Head-Mount lower part** with **M3x25** screws to the aluminum plate. Tighten the screws and make sure it sits flush against.*

B *Install the **Fan 40x40** using **M2x12 (x2)**. Tighten the screws and make sure it sits flush against.*

C *Install the **Fan turbo** using **M2x12 (x2)**. Tighten the screws and make sure it sits flush against.*

D *Secure **Head-Mount Upper part** with **M3x14** screws to the **Head-Mount lower part** . Tighten the screws and make sure it sits flush against.*

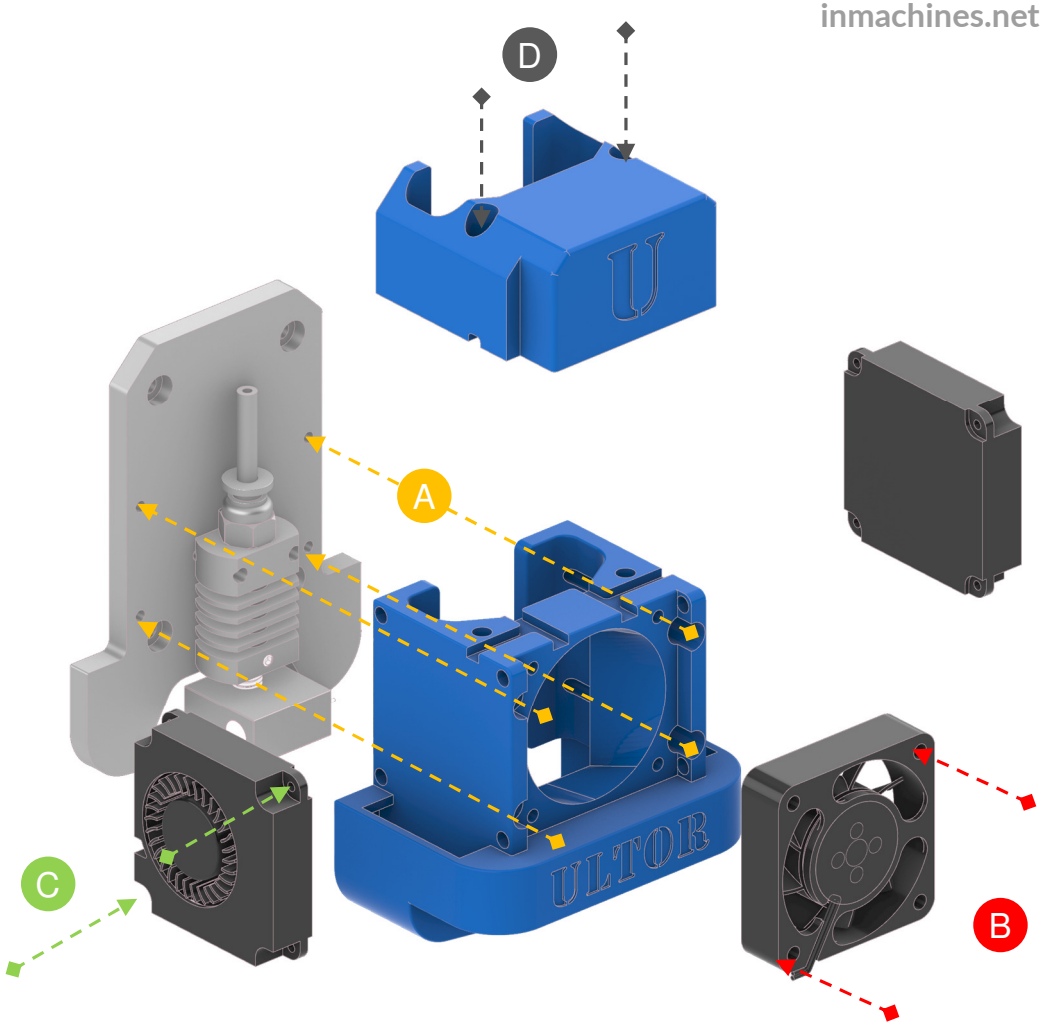

05. Accessories

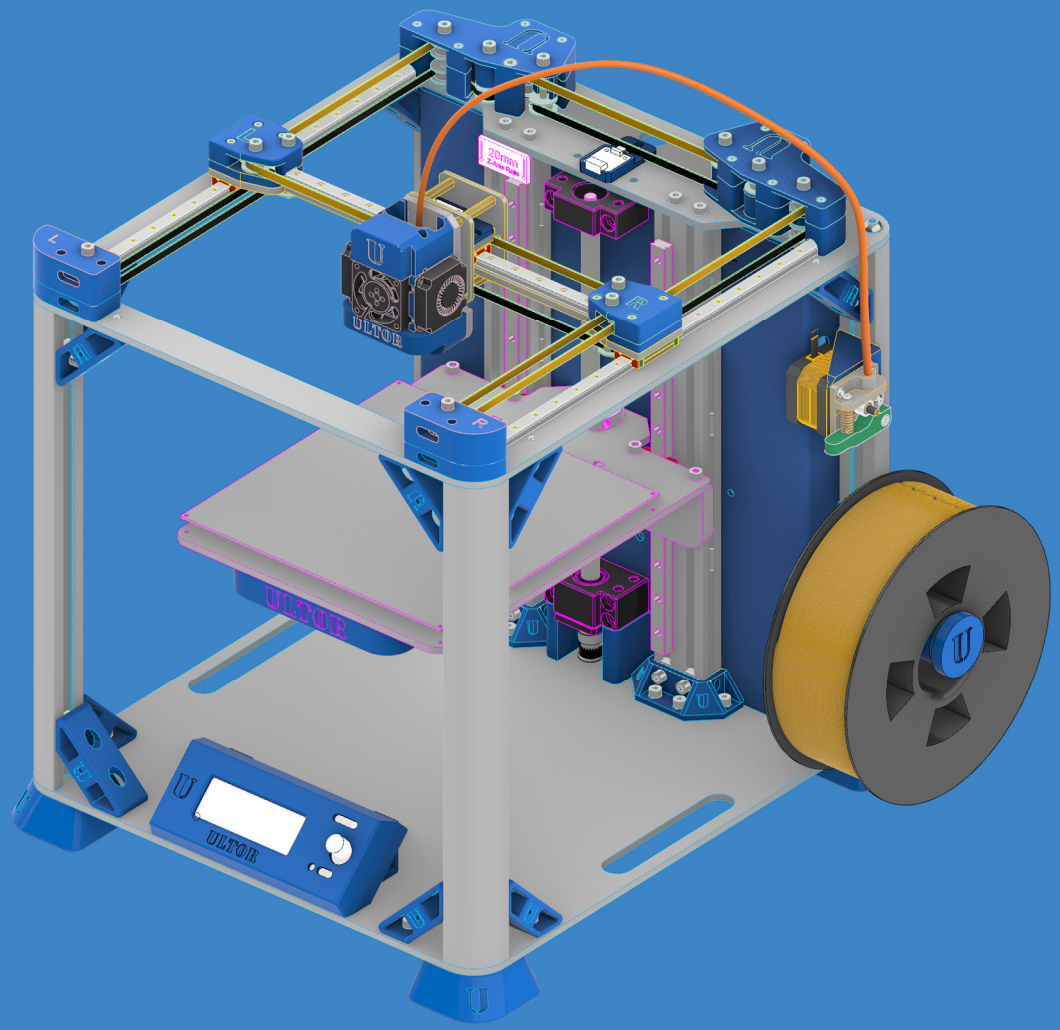

STEP 19 Assemble the spool holder

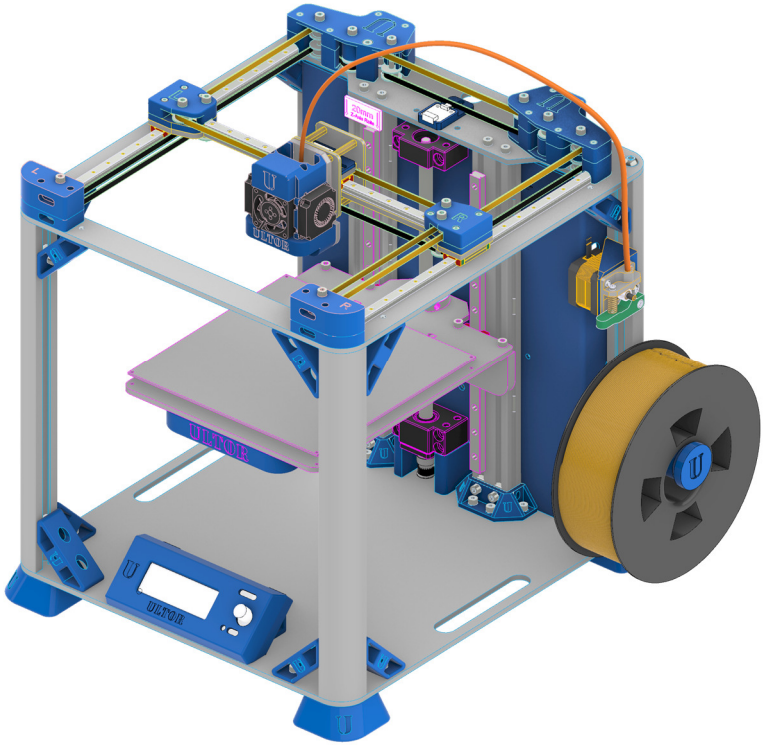

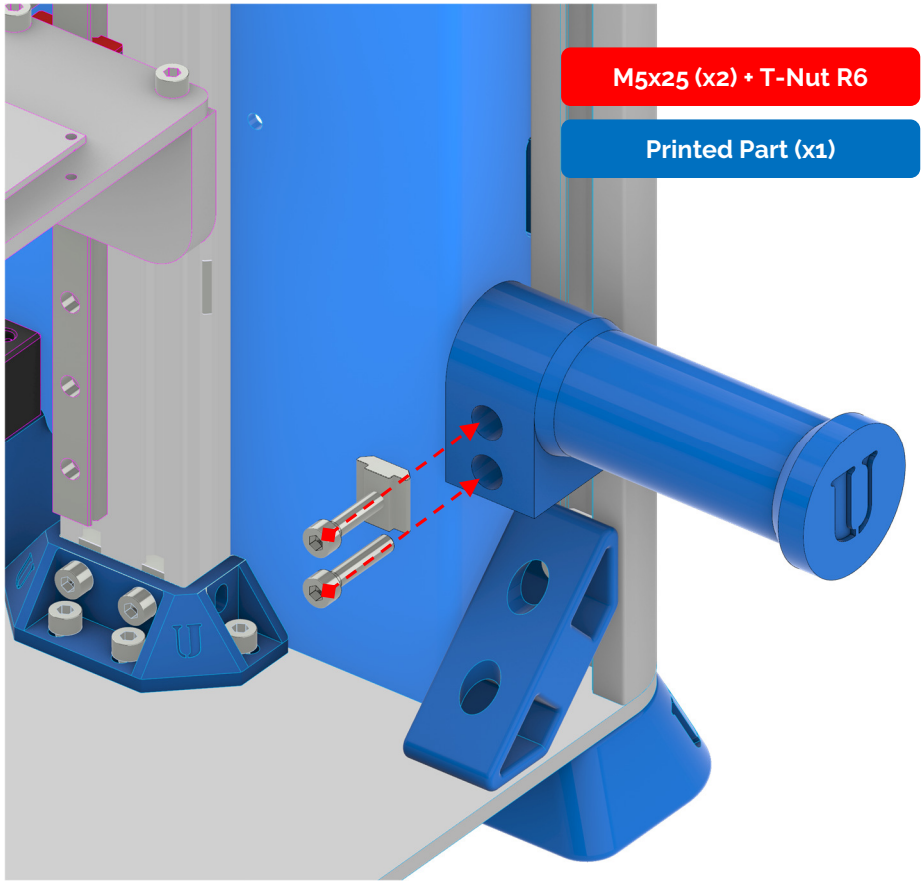

STEP 20 Assemble the Extruder

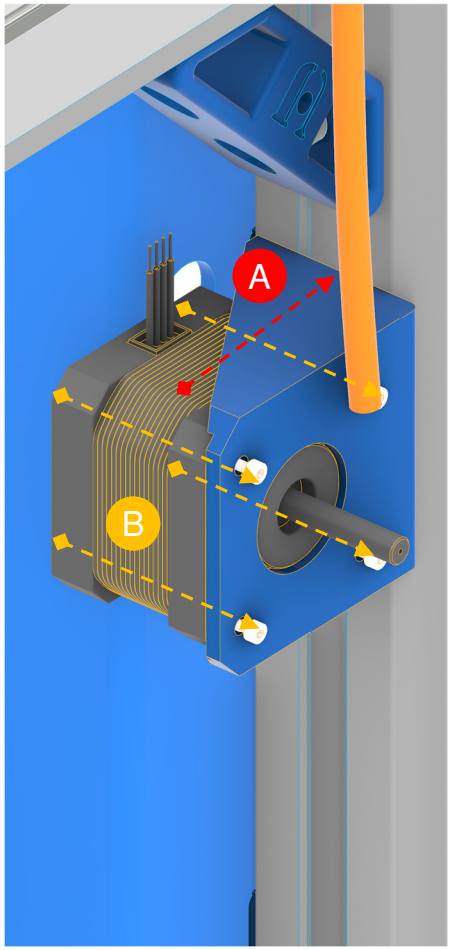

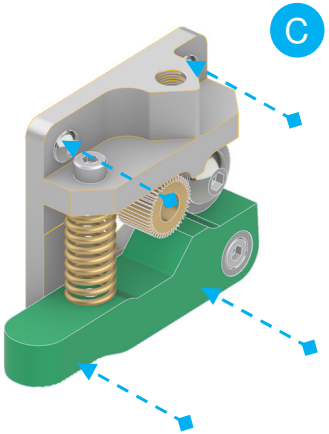

A *Secure **E-Motor Square** with **M5x16-Nut** screws to the aluminum extrusions. Tighten the screws and make sure it sits flush against.*

B *Install the **E-Motor** using **M3x10 (x4)**. Tighten the screws and make sure you pass the wiring through the electronic panel hole.*

C *Place the **extrude system** as shown. Tighten the screws and make sure it sits flush against.*

STEP 21 Assemble the Screen (PI or LCD)

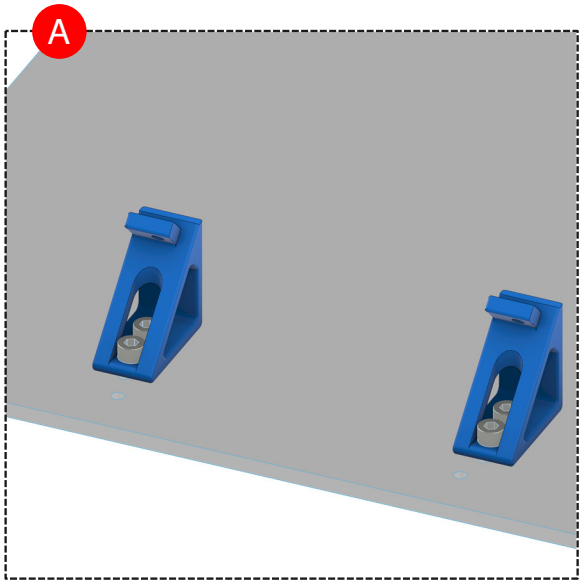

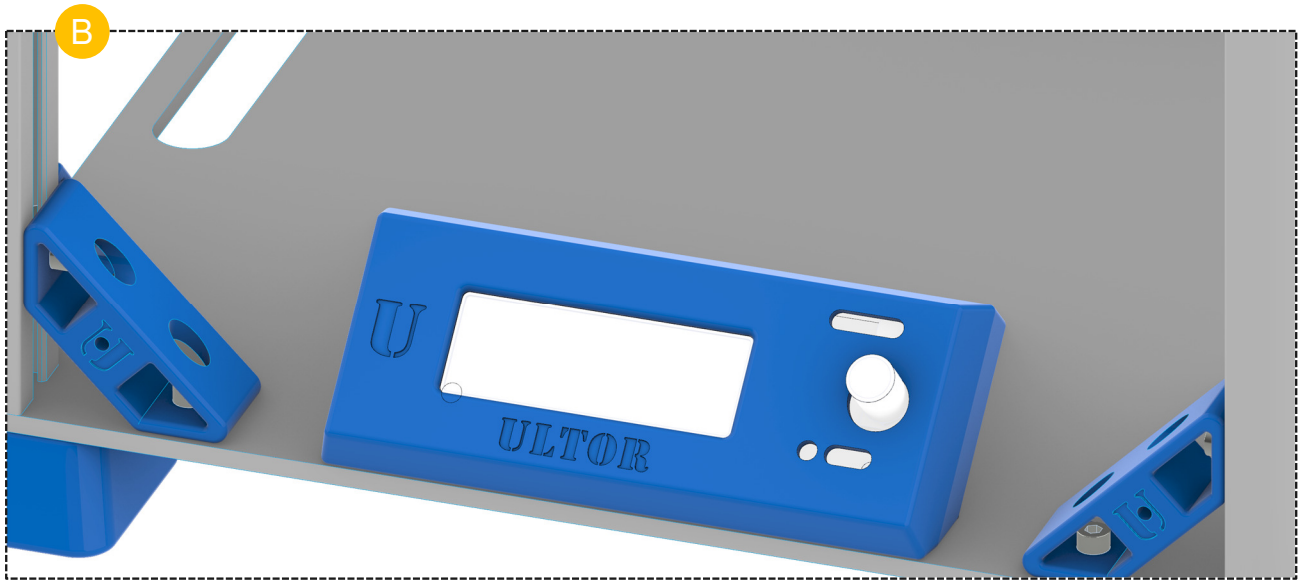

A *Place the Screen supports in the mounting holes. Secure them with **M5x10 (x4)** screws to the bottom frame . Tighten the screws and make sure it sits flush against.*

B ***Install** the LCD screen (Print). Tighten the screws and make sure to pass the wires through the upper hole in the electronic panel.*

06. ELECTRONIX

Rumba3D-SPLink - Controller Board

The "Rumba SpLink" is an innovative and feature-rich 3D printer board that takes your printing experience to the next level. With its ESP connectivity, LCD screen and TFT support, and compatibility with Marlin firmware and Klipper on Raspberry Pi, this board is designed to provide seamless control and enhanced connectivity for your 3D printer.

The name "Rumba SpLink" perfectly captures the essence of this board. By combining the trusted RUMBA board with the "ESP Link" module, it signifies a smart and efficient link between your printer's components and external devices. The connectivity capabilities offered by the ESP technology allow for easy and convenient control and monitoring of your printer.

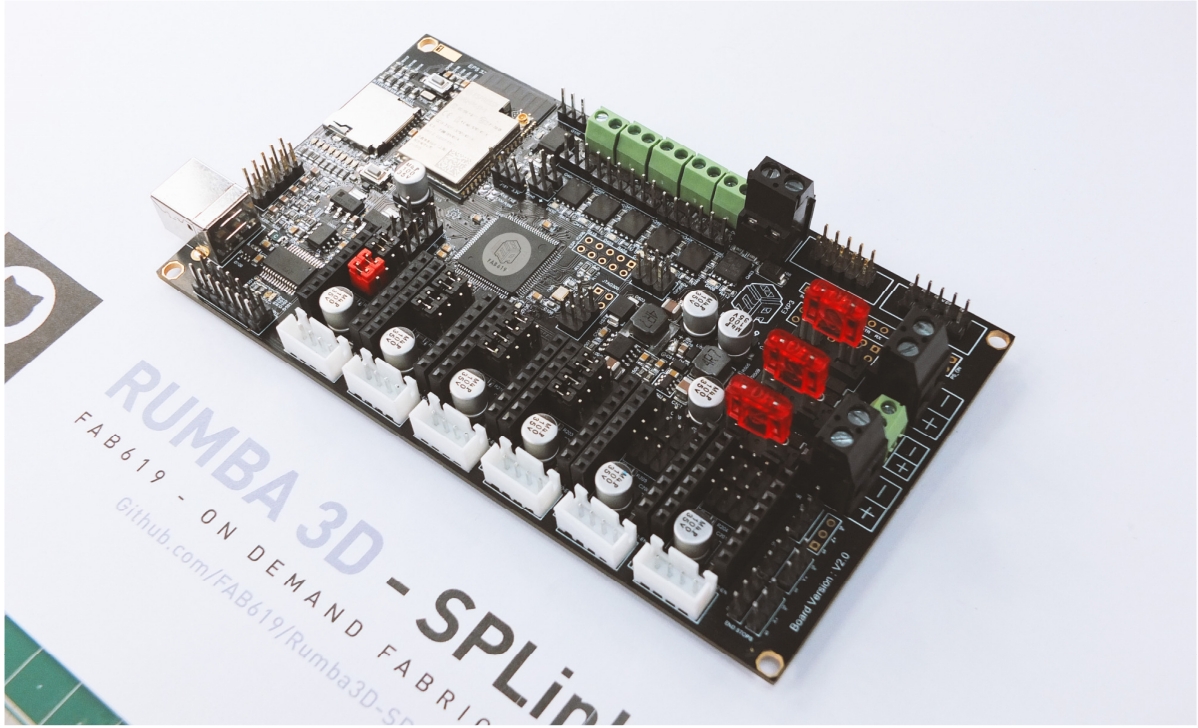

Rumba3D-SPLink - Controller Board

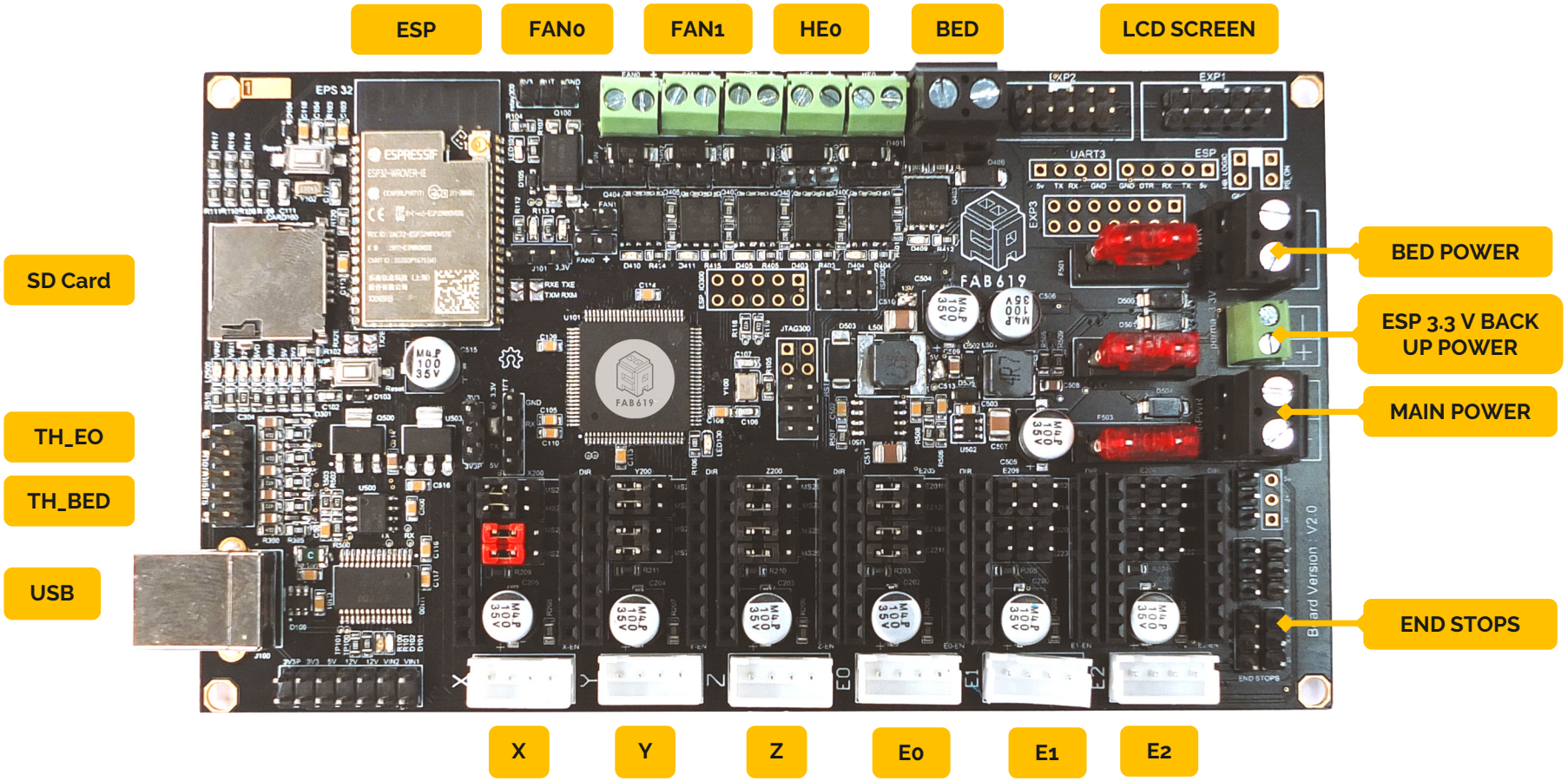

STEP 22 Electronic Wiring (Part1)

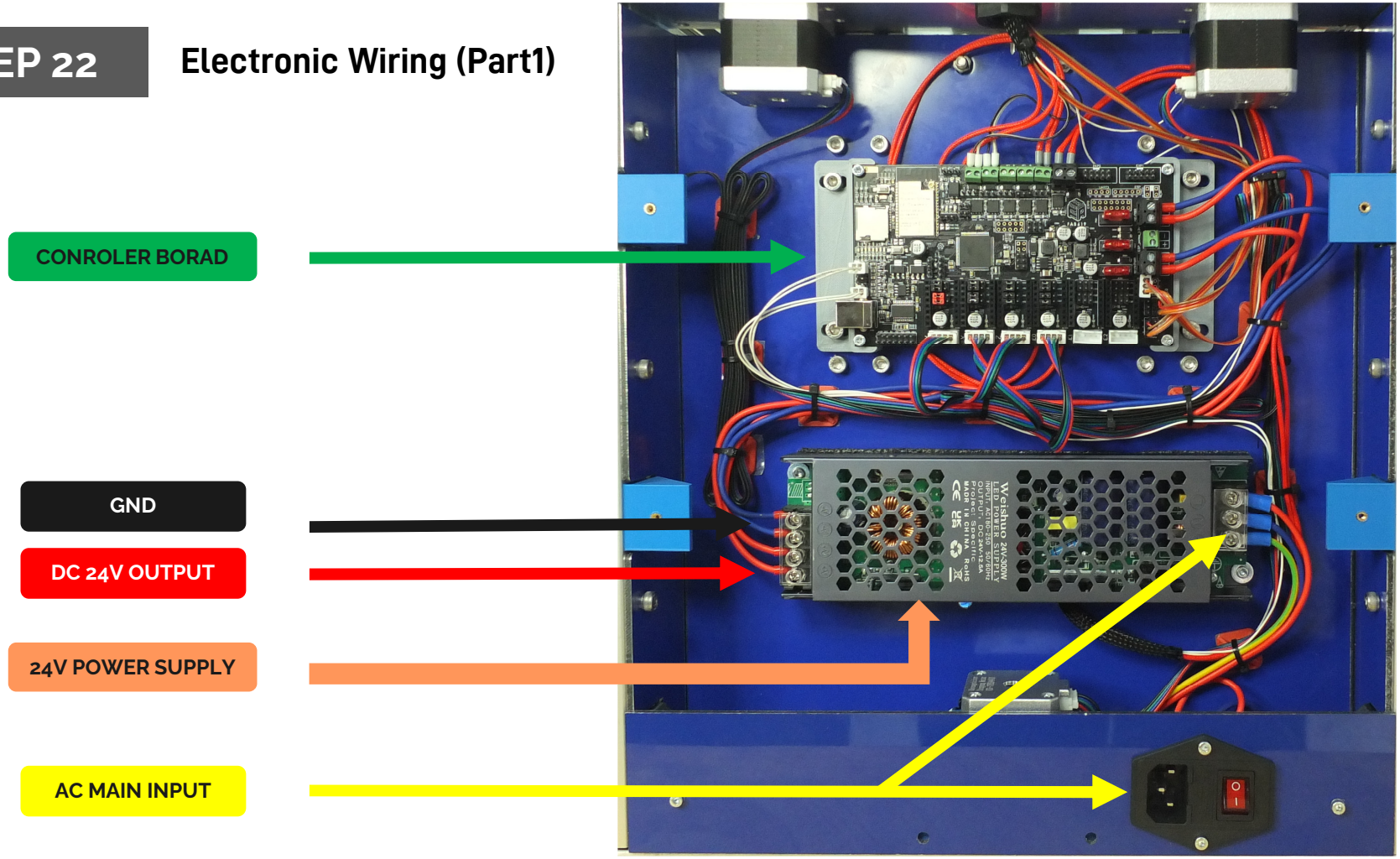

STEP 22 Electronic Wiring (Part2)

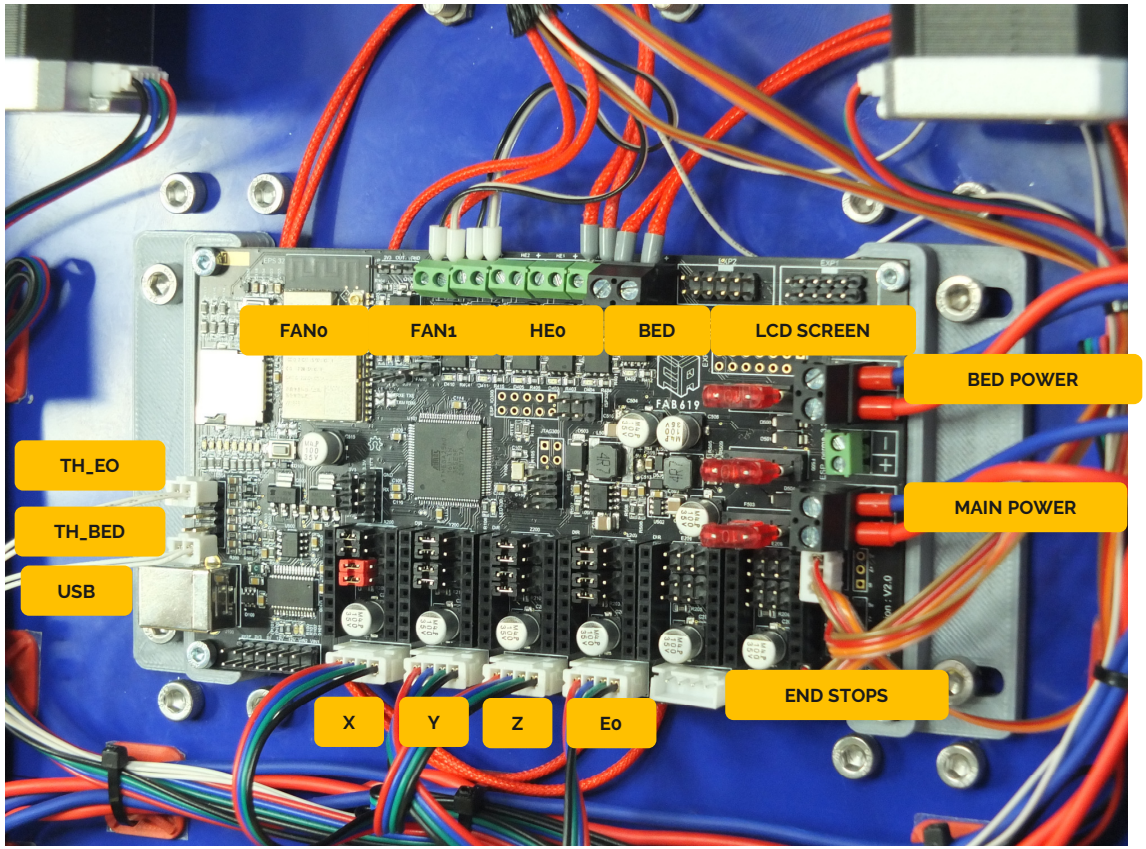

Verify the polarity of the MAIN power supply and the heated BED before turning on the power

Verify the polarity of the fans

WARNING: CHECK YOUR CABLES. INCORRECT ENDSTOP WIRING CAN DAMAGE YOUR BOARD.

Stepper Driver Configuration

TRADITIONAL MODE
SUITABLE FOR A4988, DRV8825, TMC2100, ...
REQUIREMENTS Jumper upper two pins of SLP header. Set MS1, MS2 and MS3 as desired.
EXAMPLE See X, Y, Z & E0 driver sockets.

SPI MODE
SUITABLE FOR TMC2130, TMC2160, TMC5160, TMC5161
REQUIREMENTS Jumper lower pins of all four headers (SLP, MS3, MS2 & MS1).
EXAMPLE See E1 driver socket.

UART MODE
SUITABLE FOR TMC2208, TMC2209
REQUIREMENTS Jumper lower pins of MS3. Leave MS1, MS2 and SLP disconnected.
EXAMPLE See E2 driver socket.

Stepper Driver Orientation

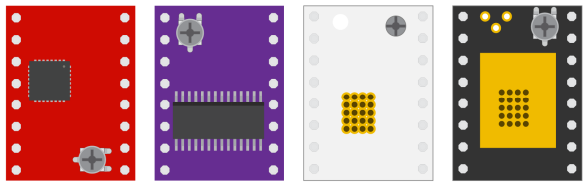

STEP 23 Install the Electronic Cover

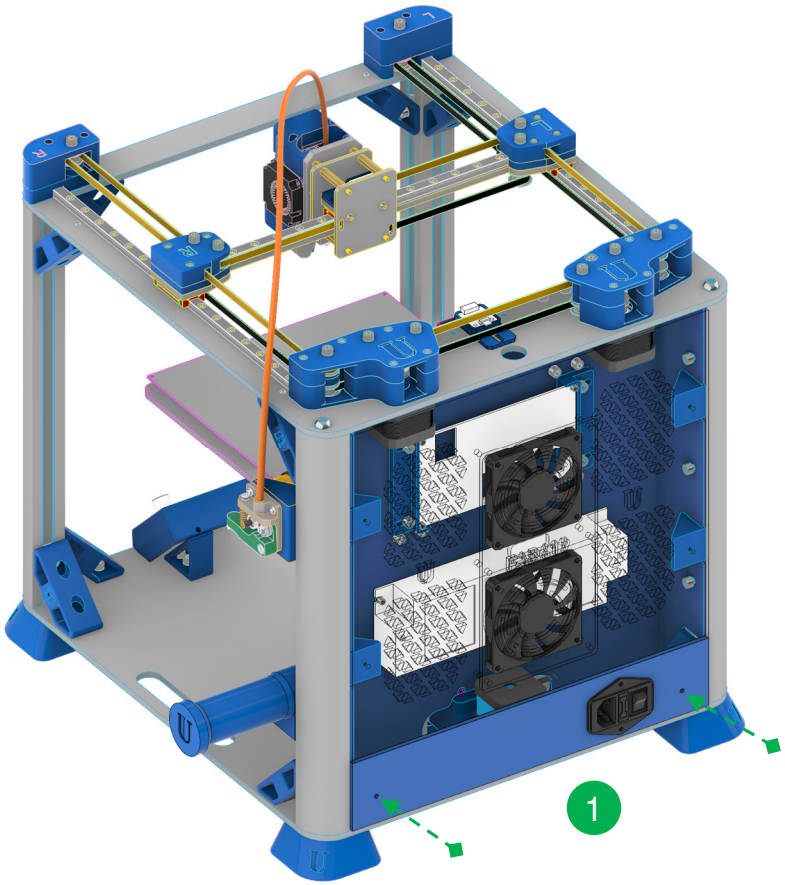

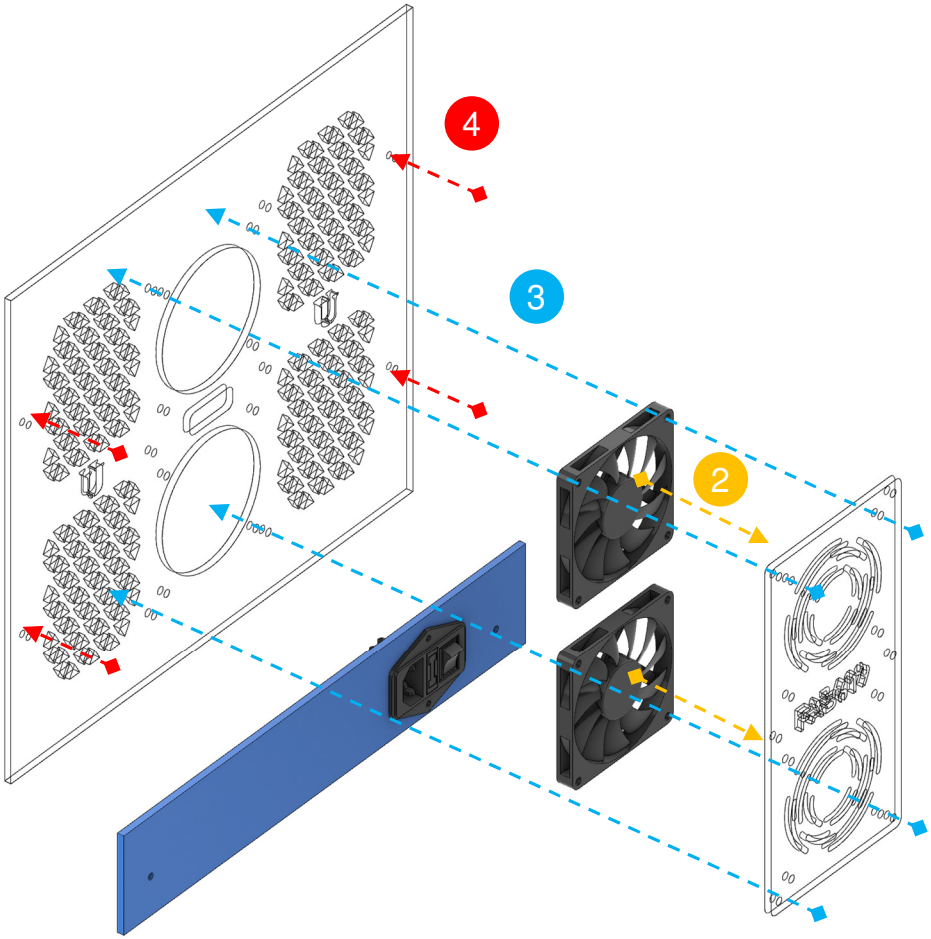

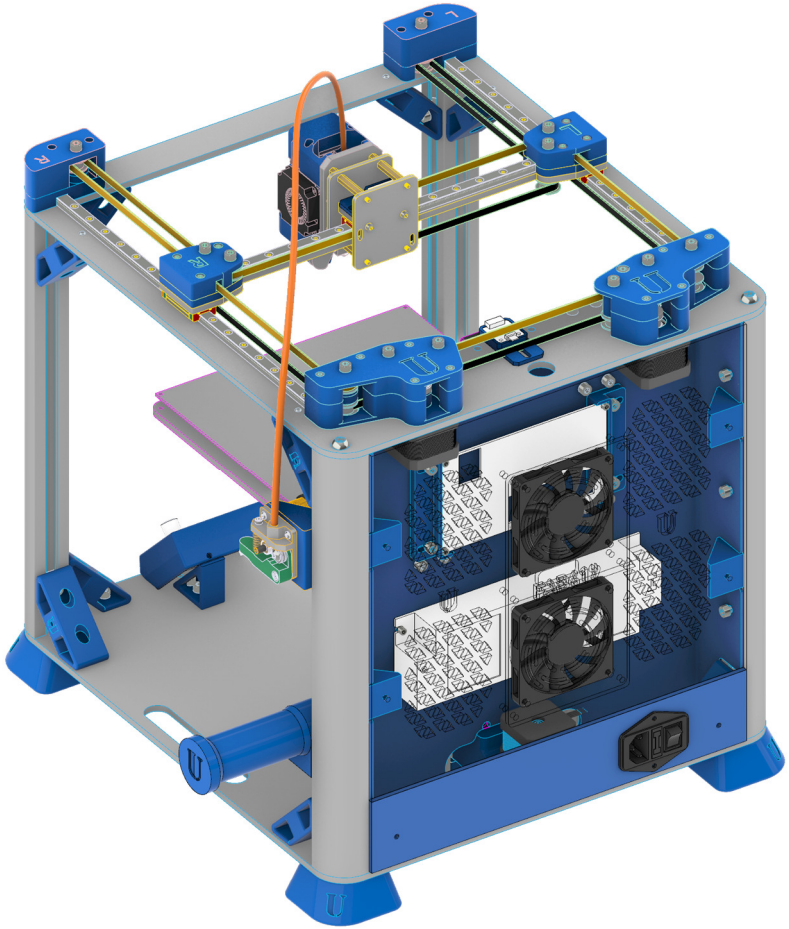

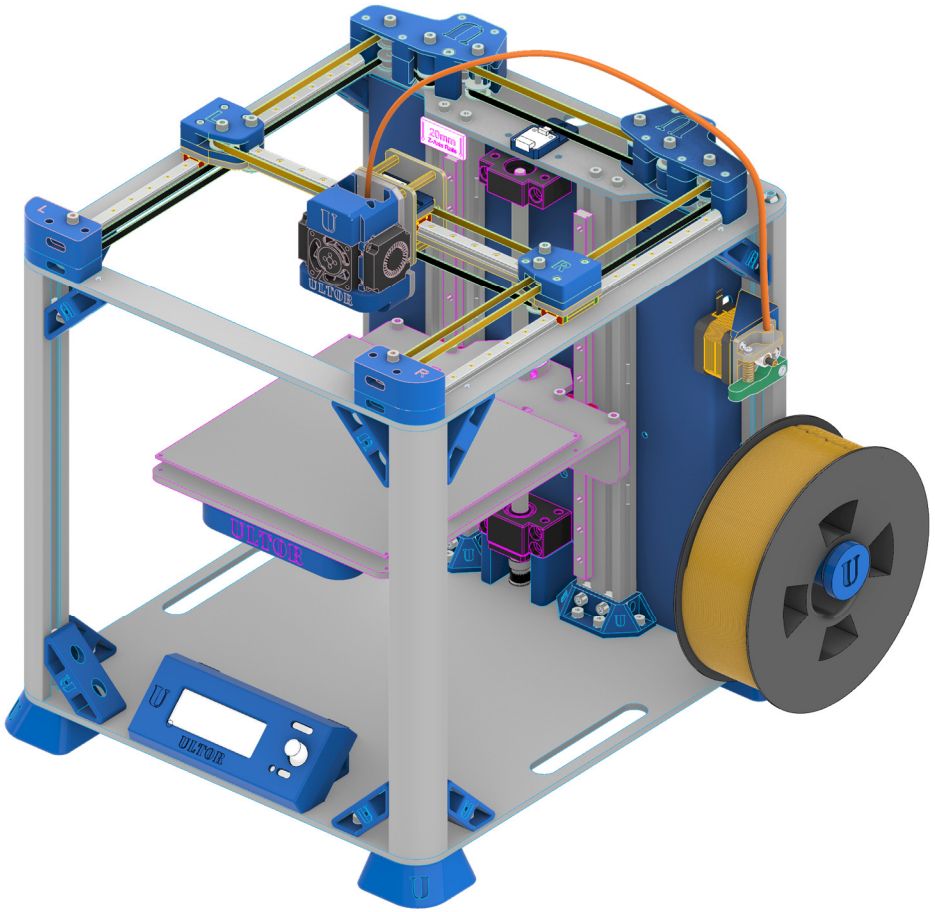

Machine ready !

STEP 23 Connect & Control the 3D Printer – Ultor2020 Dashboard

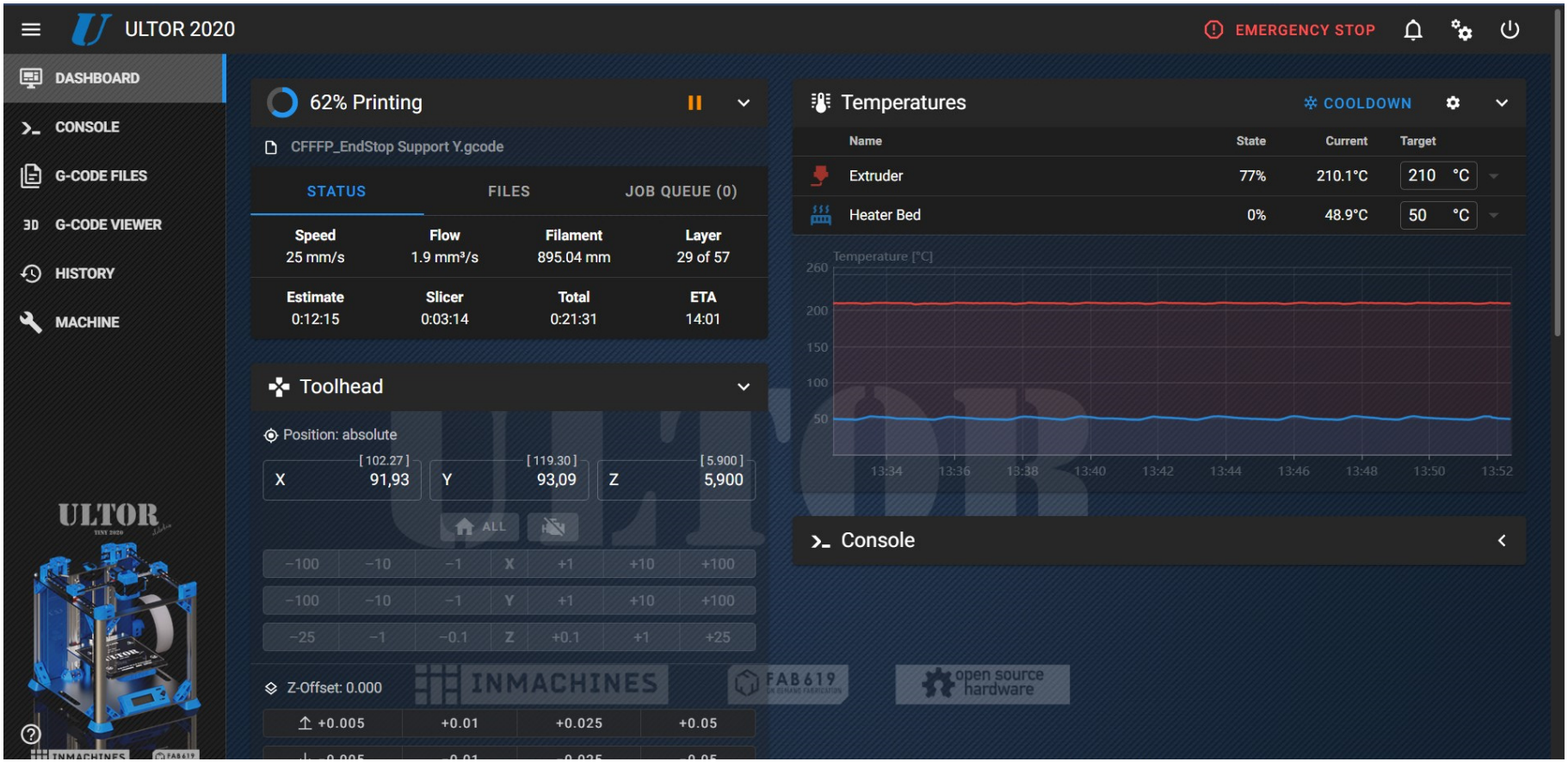

STEP 24 Manage the printer history – Ultor2020 Dashboard

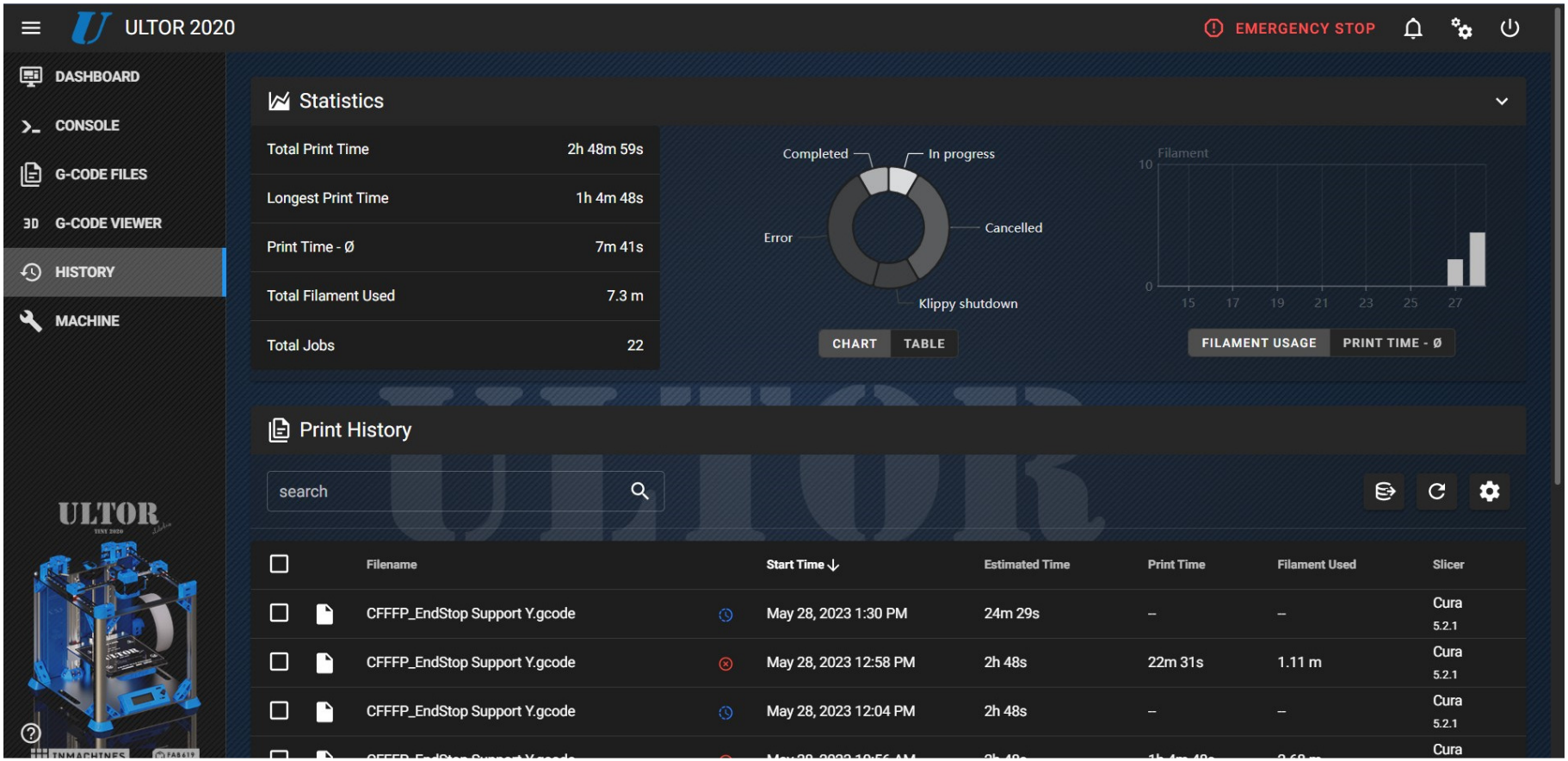

STEP 25 Test your machine

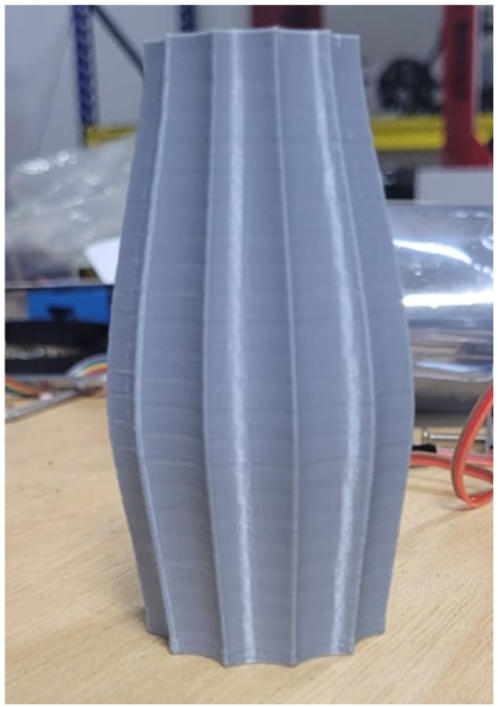

GitHub

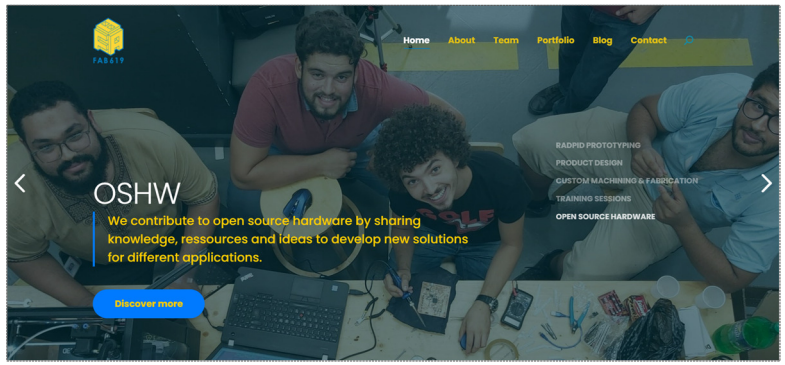

STE - FAB 619 | on demand fabrication

Mail : alilamhamed@fab619.tn
alilakais@fab619.tn

GSM : (216) 24 63 10 38
(216) 54 54 47 31

Adresse : **(Tunis)** Bureau A8-8 sis Golden Towers, Centre Urbain Nord
(Monastir) Fabrique entrepreneuriale, Technopole neotex, 5012, Sahline

www.fab619.tn

INMACHINES

FAB619