ULTOR V1 _ Assembly guide

Open source 3D printer machine

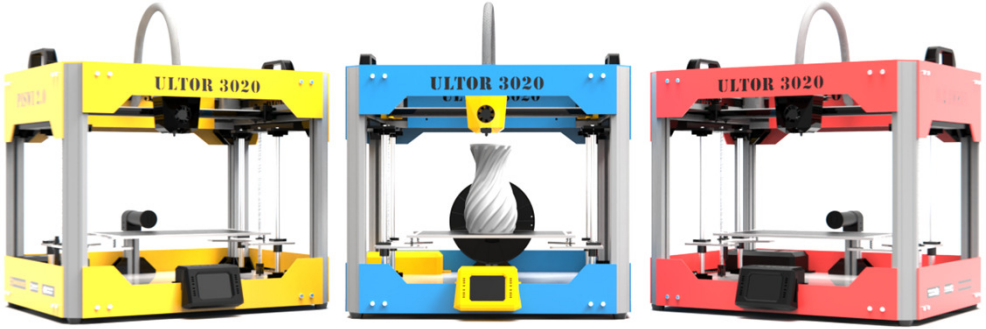

STE - FAB 619 | on demand fabrication

Mail : alilamhamed@fab619.tn
alilakais@fab619.tn

GSM : (216) 24 63 10 38
(216) 54 54 47 31

Adresse : **(Tunis)** Bureau A8-8 sis Golden Towers, Centre Urbain Nord
(Monastir) Fabrique entrepreneuriale, Technopole neotex, 5012, Sahline

www.fab619.tn

MECAPOLY
INDUSTRIAL PRODUCTS

01. Frame Assembly

01. Frame Assembly

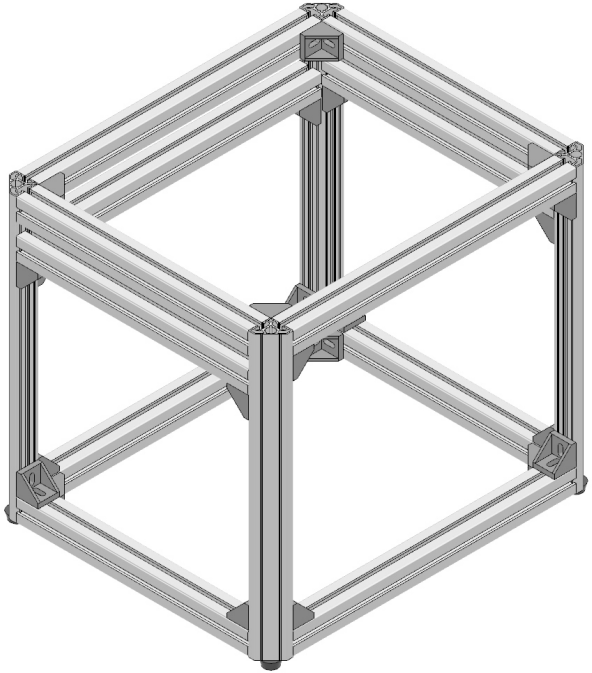

It is **strongly recommended** to assemble the frame on a known flat surface (such as a solid table, work surface or similar). Assembling the frame on a carpeted floor, or other non-flat surface, can cause the finished frame to not be square. This can cause issues with print quality and performance.

GET READY

Assemble the right & left subframe parts

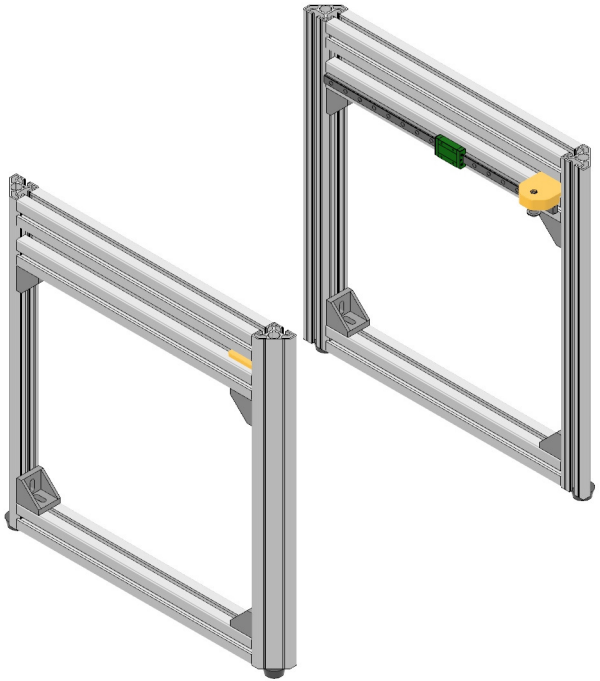

X6 (3 per subframe)
4040 Chamfered extrusions
500mm

X4 (2 per subframe)
4040 Chamfered extrusions
500mm

X8 (4 per subframe)
90-degree Corner Bracket

X4 (2 per subframe)
90-hidden Corner Bracket

X20 (10 per subframe)
M5 – T-nut R6

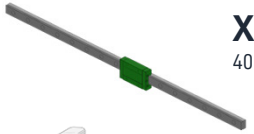

X02 (01 per subframe)
400mm MGN12 Linear Rail

10x - M3x12 Cap Head Screw (5x per subframe)

X02 (01 per subframe)
Core XY idler

X02 (02 per subframe)
Core XY alignment guides

X04 (02 per subframe)
Foot machine

Before starting

90-degree Corner Bracket – installation

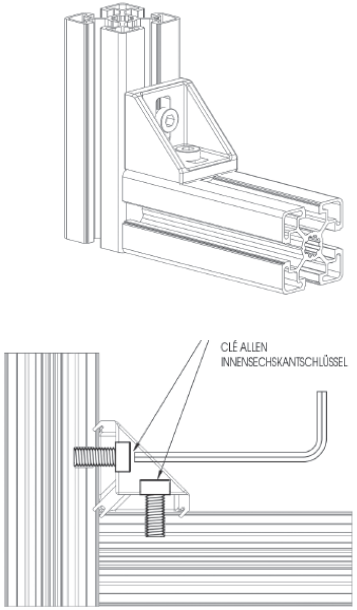

Hammer screw NUT– Fixation

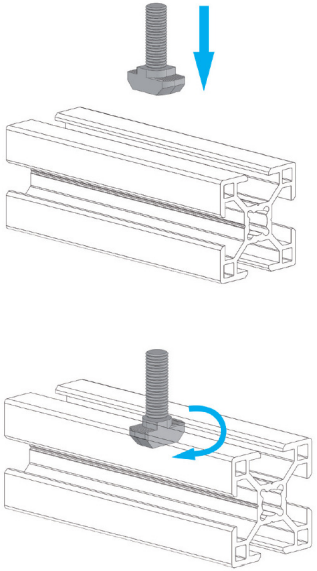

90-degree Hidden Bracket – installation

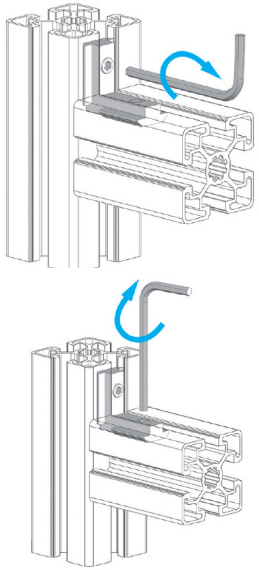

Fastening with angles or connectors. Wide possibility for adjustment and ease of installation.

STEP 1 Prepare the left & right subframe parts

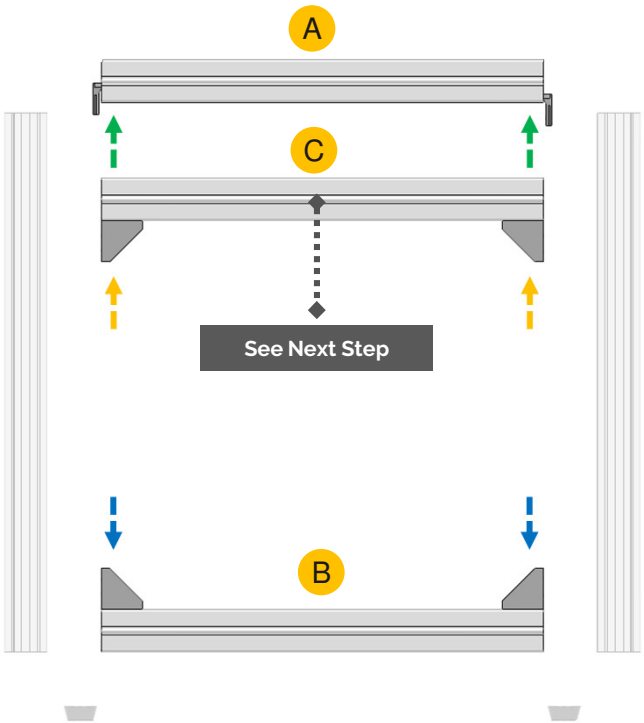

A

*Install **the hidden Corner Bracket** into the 410 mm - 4040 extrusion and tighten the socket set screws to secure them.*

B

*Install the 90-degree **Corner Bracket** onto each position shown. Tighten the M5x12 screws to secure them.*

Ensure the corner assemblies are flush and square with the ends of the extrusions after tightening the screws.

See Next Step

*Install the **90-degree Corner Bracket** onto each position shown. Tighten the M5x12 screws to secure them.*

Prepare the Y linear extrusion rails for installation

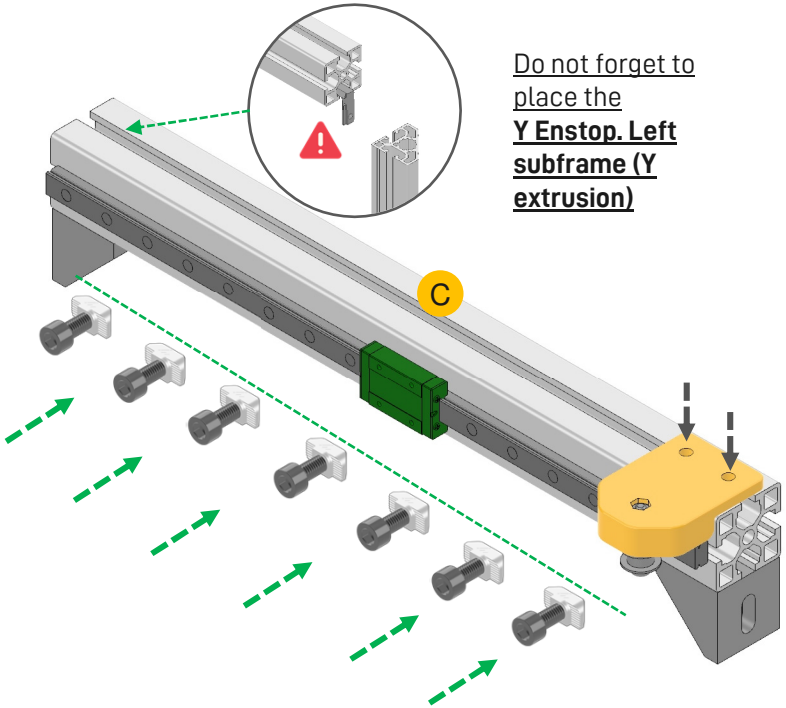

Do not forget to place the **Y Enstop. Left subframe (Y extrusion)**

Do not allow the linear rail carriage to leave the end of the rail
Don't remove the plastic stops installed in the ends of the linear rail

Insert an M3x12 screw in each of the holes on the linear rail.
Put a T-nut onto each screw and position it horizontally.

*Install the **CoreXY idler assembly** as shown &Tighten the **2x** M5x12 screws to secure them.*

Ensure the idler assembly is flush and square with the ends of the extrusion after tightening the screws.

Repeat these steps for **the left subframe** linear rail extrusion

STEP 2 Assemble the right subframe parts (Part 1)

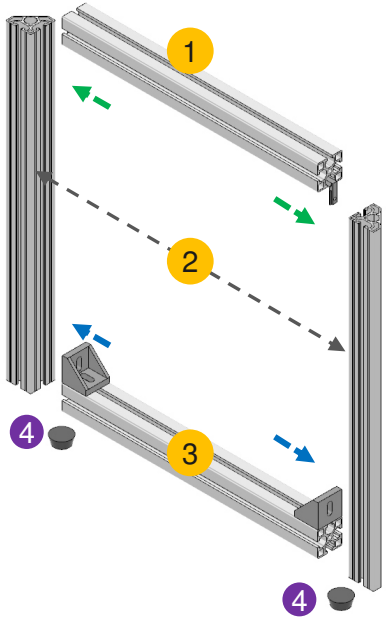

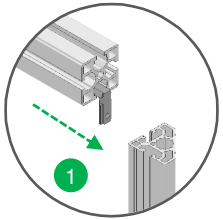

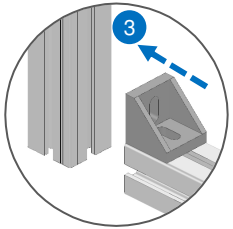

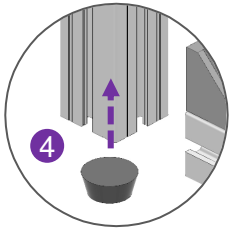

1 2 3 Assemble the 500 mm chamfered extrusions and 410 mm extrusions together as shown, making sure the extrusion joints are square

*Screw up the **hidden Corner Bracket within** the 500 mm chamfered extrusion and tighten the socket set screws to secure them.*

Screw up the 90-degree Corner Bracket within the chamfered 500 mm extrusion as shown.

2 Assemble **machine foots** into the 500 mm chamfered extrusion. Tighten the screws to secure them.

Ensure the corner assemblies are flush and square with the ends of the extrusions after tightening the screws.

Repeat this step for **the left subframe** part.

STEP 3 Assemble the right subframe parts (Part 2)

Rotate the Subframe .Make sure to assemble the Core XY extrusion on a known flat surface (such as a solid table, work surface or similar

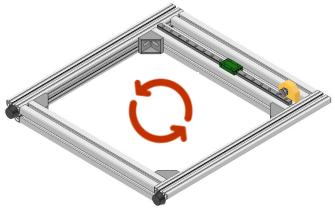

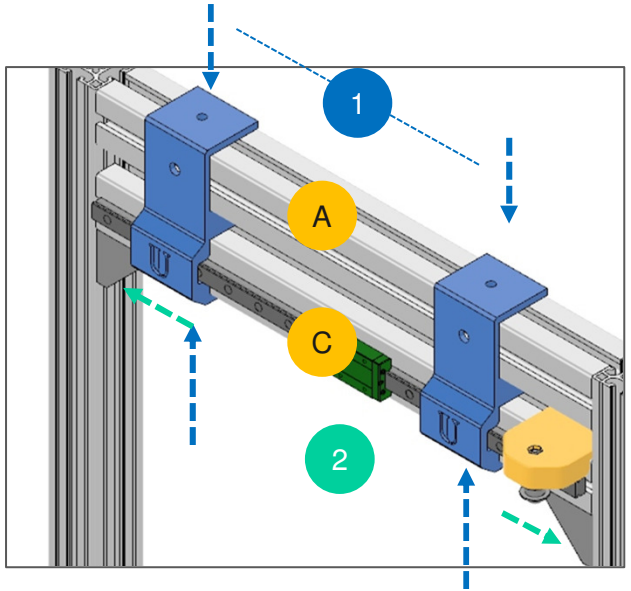

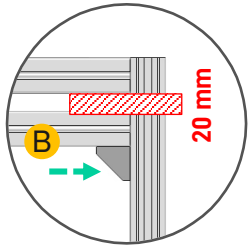

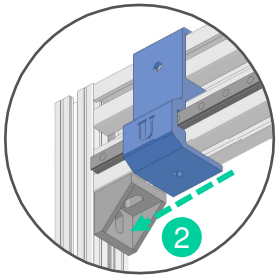

A 1 Install **Core XY alignment guides** as shown, this will make sure the linear rail extrusion is positioned correctly.

B

Insert an M5x12 screw in each hole of the alignment guides as shown. Tighten the screws to ensure the distance of 20mm.

B 2 Screw up the 90-degree Corner Bracket within the chamfered 500 mm extrusion as shown.

Use the M5x12 screws + T-nut to secure them..

Don't forget to remove Core XY alignment guides.

Repeat this step for **the left subframe** linear rail extrusion

STEP 4.1 Assemble the back & front subframe (Part 1)

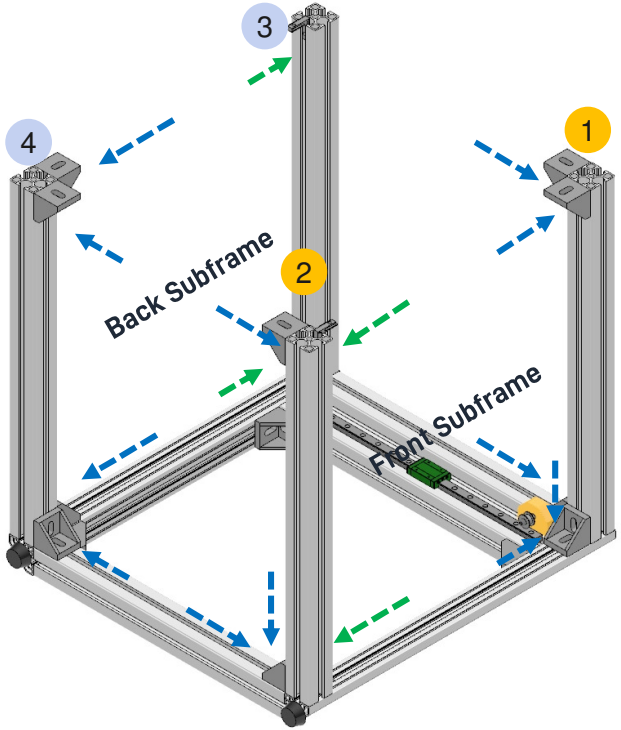

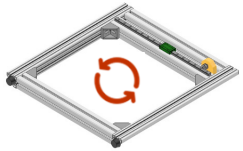

Rotate the Right Subframe extrusion

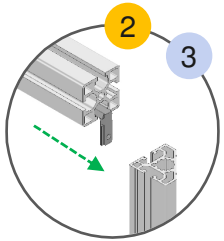

Hidden Corner Bracket

1 2 **Front Subframe** - Assemble the 500 mm extrusions together as shown, making sure the extrusion joints are square

*Screw up the 90-degree Corner Bracket of **500 mm extrusion** within the **right subframe** as shown.*

*Screw up the hidden Corner Bracket **within** of **500 mm extrusion lower** within the **right subframe** as shown. Tighten the socket set screws to secure them.*

3 4 **Back Subframe** - Assemble the 500 mm extrusions together as shown, making sure the extrusion joints are square

*Screw up the hidden Corner Bracket **within** of **500 mm upper extrusion** within the **right subframe** as shown. Tighten the socket set screws to secure them.*

Make sure to place all Corner brackets before placing the **left subframe**.

STEP 4.2 Assemble the back & front subframe (Part 2)

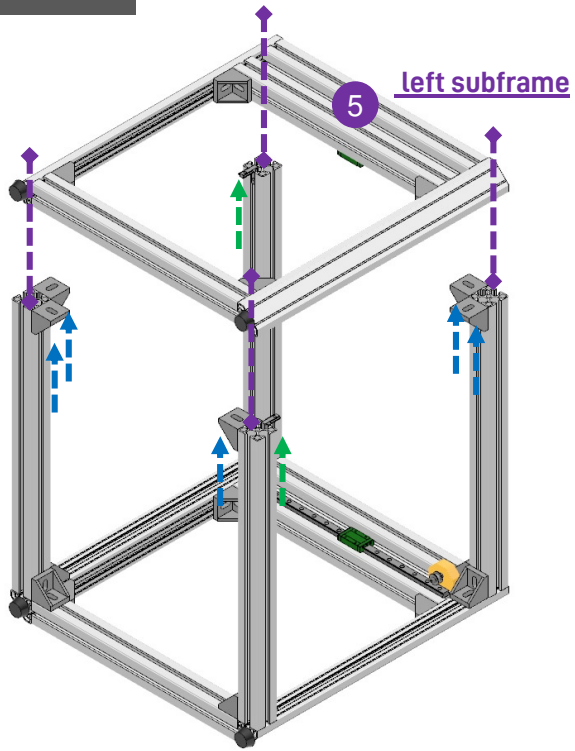

5 **Place the left subframe on the 500 mm extrusions ends.**

Ensure the corner assemblies are flush and square with the ends of the extrusions before tightening the screws.

*Screw up the 90-degree Corner Bracket of **500 mm extrusion** within the **right subframe** as shown.*

*Screw up the hidden Corner Bracket **within** of **500 mm extrusion lower** within the **right subframe** as shown. Tighten the socket set screws to secure them.*

STEP 4.3 Core XY Motors Assembly

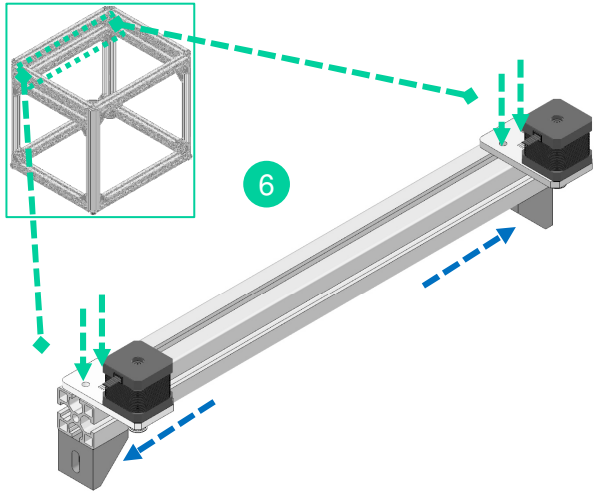

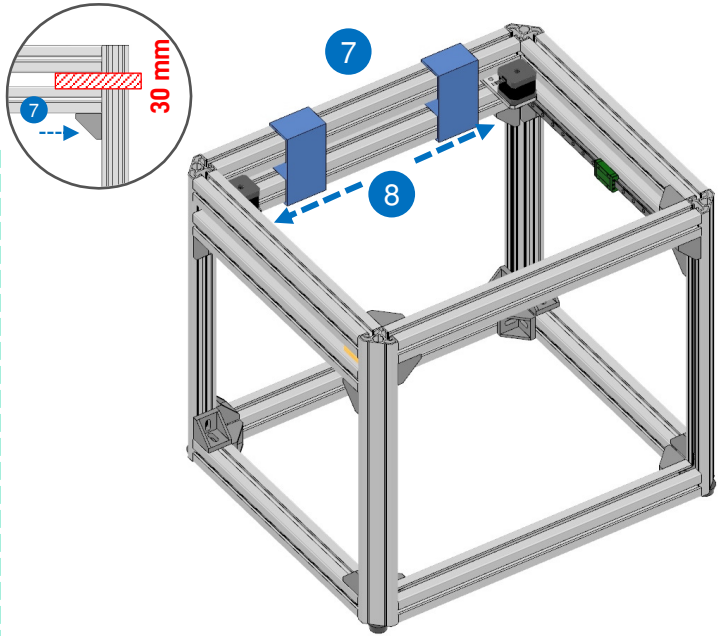

6 *Place and secure the* ***XY motors // 2x plates*** at the end of the **500 extrusion** as *shown. Tighten the* ***2x*** *M5x12 screws to secure them.*

7 Place the **alignment guides between upper within the back frame extrusion** as shown, this will make sure **XY motors extrusion** is positioned correctly.

8 *Use the M5x12 screws + T-nut to secure them..*

STEP 5 Measurements & squareness check !

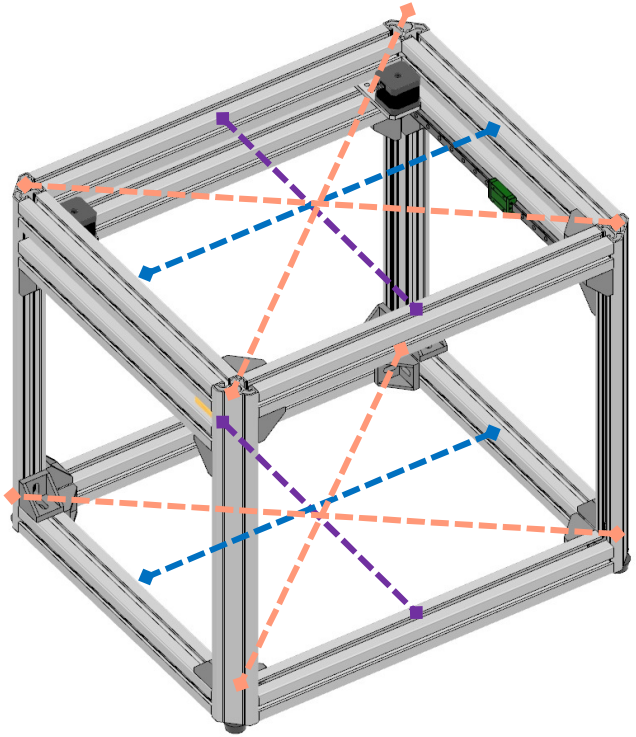

Use a long ruler (preferably) or a tape measure, measure both distances shown. It is important that the measurements should be as close as possible to the following values.

- ~ 500mm
- ~ 410mm
- ~ 719,42mm

In case the measurements are unequal and significantly differ from the ones indicated above, it is recommended to verify that all corners are squared and then recheck the measurements.

II. CORE XY - Assembly

STEP 6 Prepare the X-axis joiner plate + X-axis ends (Left / Right)

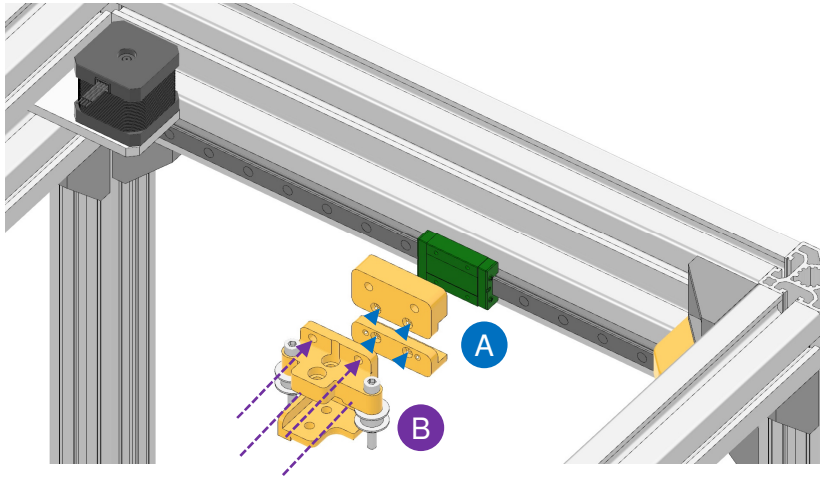

A Install the **Right X-axis Joiner plate** on the MGN12 carriage.

Screw up M3x8 Cap Head Screws to secure them.

B Install the **Right X-axis End** on the joiner plate.

Screw up M4x8 Cap Head Screws to secure them.

It is important to test the carriage by applying a small amount of pressure on it. If you notice any roughness or difficulties while moving the carriage, kindly investigate the issue.

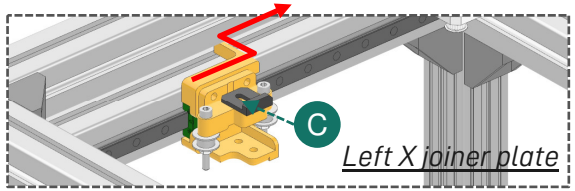

Repeat this step for **the left joiner plate.**

(Take into consideration the switch joiner plate part for the Y EndStop)

C Place the **X End Stop Switcher** as shown on **Left X-axis End**.

STEP 7 Assemble the X-axis gantry Extrusion

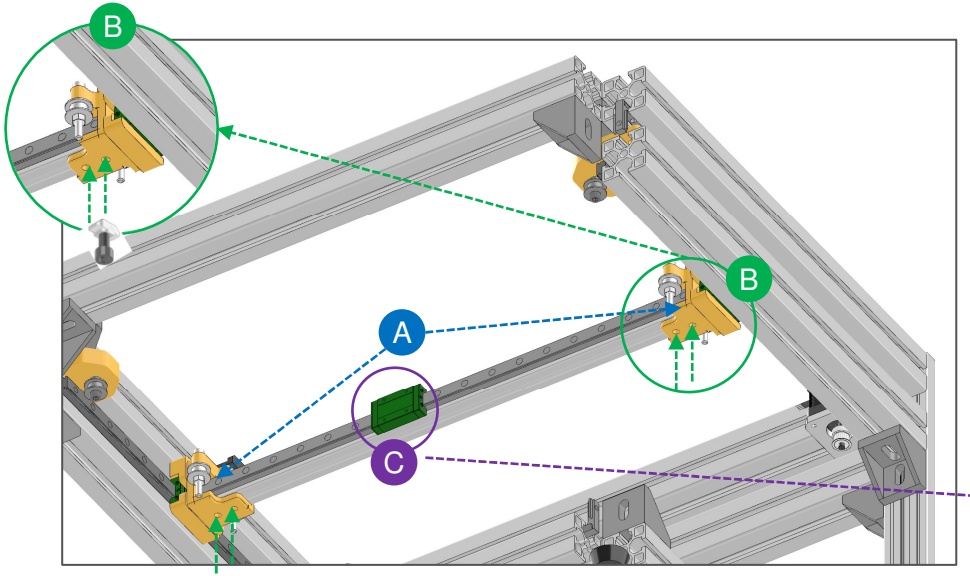

A Position the Gantry between X-axis Ends

B Insert T-nut slightly into the extrusion & position them correctly to fit the X-axis Ends holes.

Screw up M4-Cap Head Screws to secure them.

C Install The U-mount Fixture & secure them on the X carriage

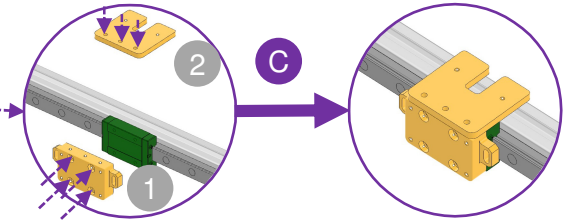

TEST THE Y-AXIS MOVEMENT

Minor variations in resistance are expected, but if you encounter significant difficulty in pushing the carriage or if it gets completely stuck, such issues are not normal.

STEP 8 Route the core XY belt

1 Take the **loose end of the Core XY belt**.
Feed it in the **left hole U-mount Fixture**.
Tighten with **2x cable clamps**.

2 Follow the **routing Belt path** as shown.
4 3 Make sure that the belt pitch is facing the front subframe .

Finish 5 Once finish routing, Tighten with **2x cable clamps** in **the X end stop component**.

6 Take the **loose end of the Core XY belt**.
Feed it in the right **hole U-mount Fixture**.
Tighten with **2x cable clamps**.

7 Follow the **routing Belt path** as shown.
9 8 Make sure that the belt pitch is facing the front subframe .

Finish 12 Once finish routing, Tighten with **2x cable clamps** in **the X end stop component**.

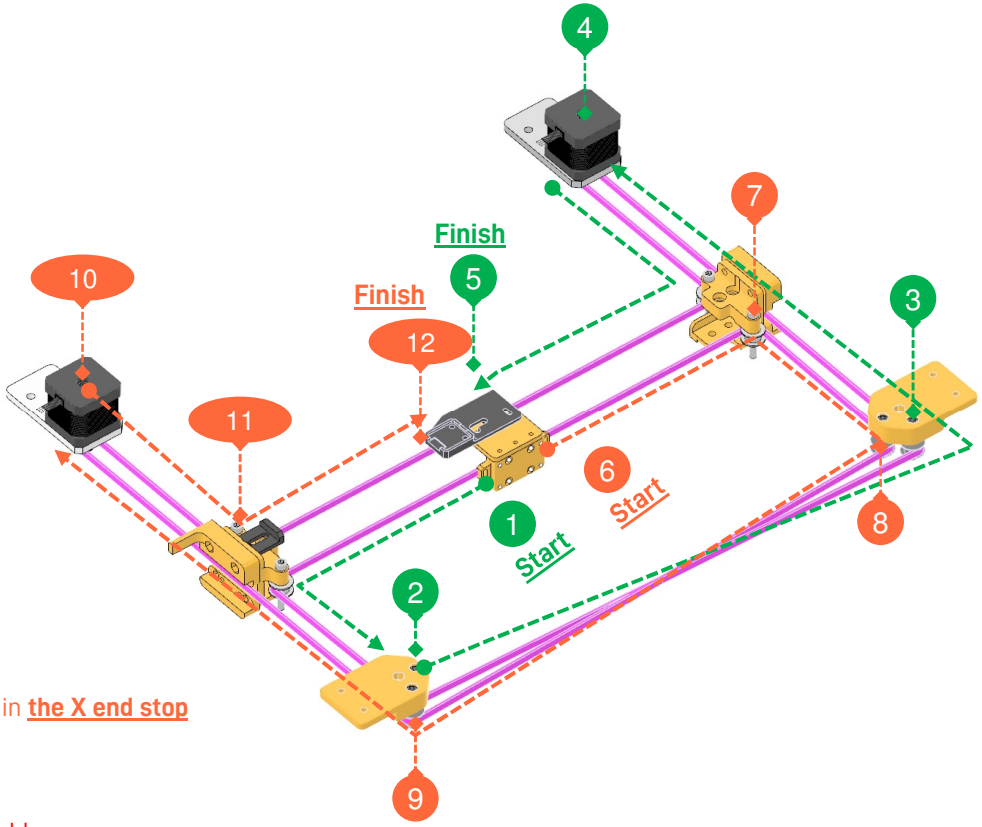

If it is difficult to feed the belt within the pulley, try to dissemble

III. Electronics panel

STEP 9 Prepare The electronic panel (Part 1)

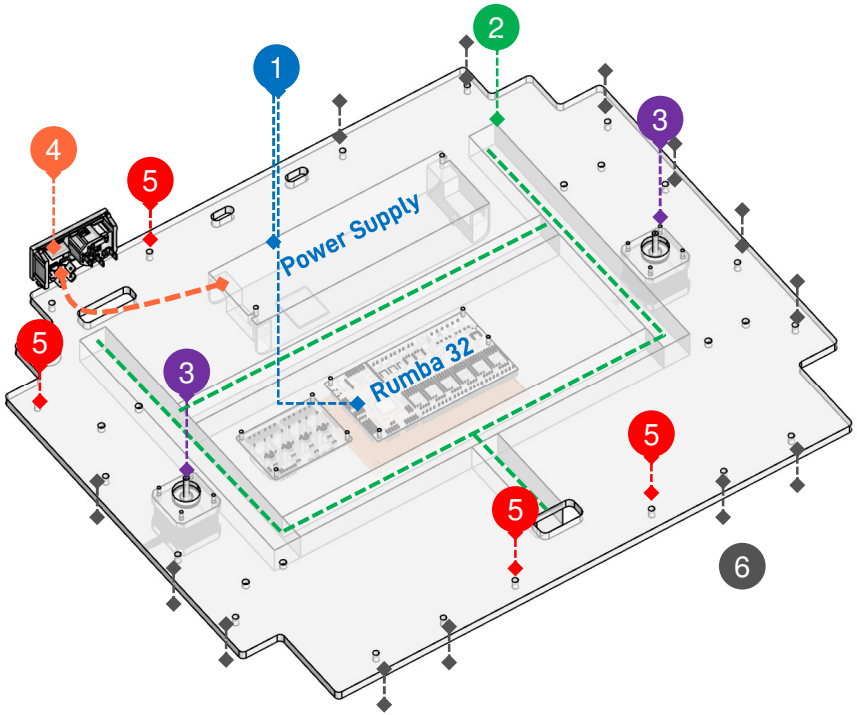

1. Place the Power Supply & The Rumba 32 as shown. Secure them with M3 screws to the panel.
2. Place the electronic cable racks as shown. Glue them to the panel with the double tape & hot glue.
3. Place The Z-axis Motors.
4. Connect the Power supply switcher.
5. Place the special Screen & Capot Screws M5-20 + T-nuts
6. Place the M5-16 + T-nuts for the rest of the panel

STEP 9 Prepare The electronic panel (Part 2)

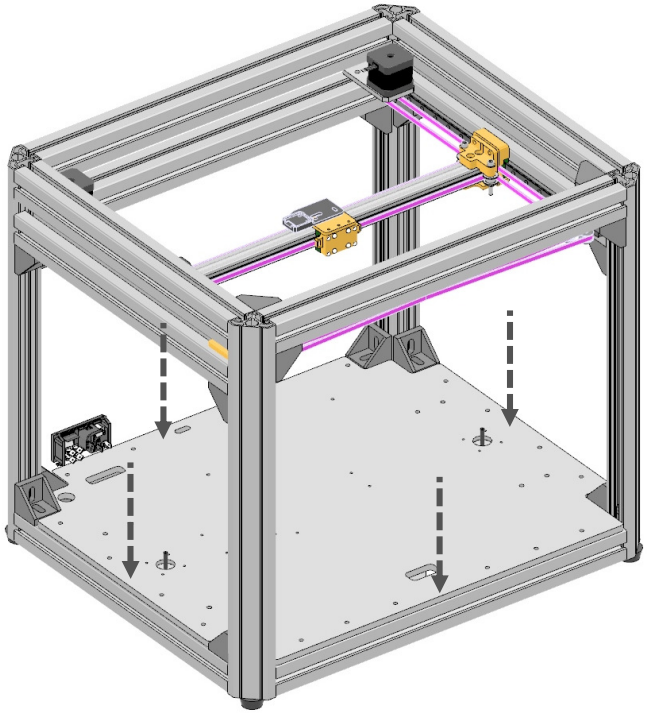

7. Position the electronic panel on the Aluminum Frame Extrusions.

8. Secure All M5-16 with the frame **except for Screen & Capot Screws M5-20 + T-nuts.**

If you plan to use a 4mm sheet metal for electronics panel, it is highly recommended to carry the machine with **two people due to heaviness**. **Other wise use 4mm Aluminum sheet. Or see the last updates for The Ultor machine V,1**

VI. Z – axis & Heated Bed

STEP 10 Assemble the z-axis & heated bed (Part 1)

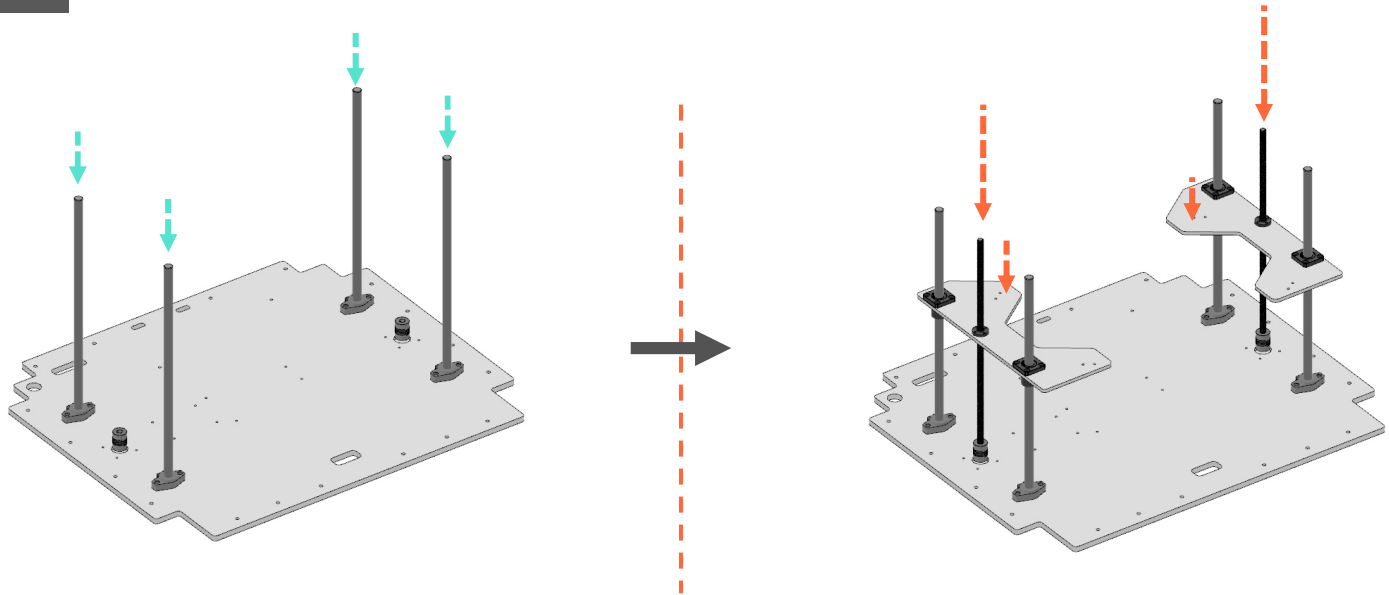

1 Place the linear rods. Secure them on the electronic panel with M5x16 & SHF12 printed components.

2 Place the bed arms & T8 threated rod.

STEP 10 Assemble the z-axis & heated bed (Part 2)

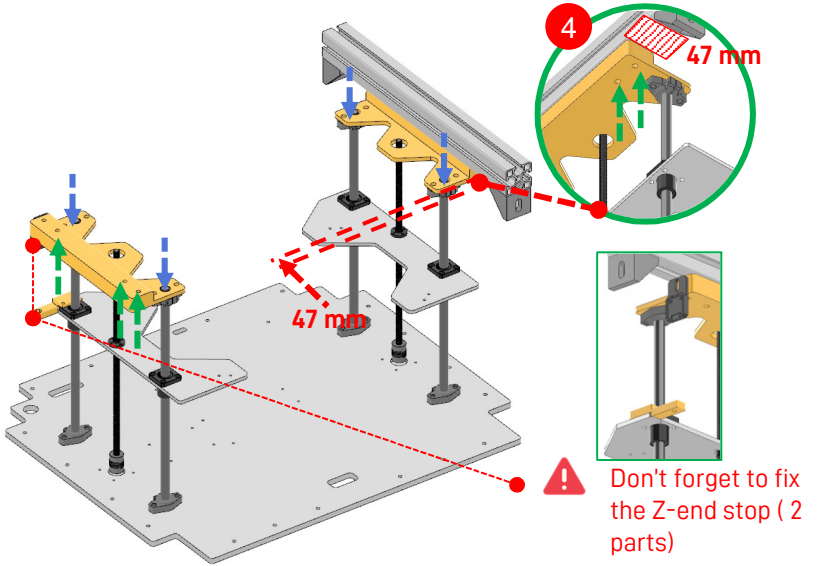

Don't forget to fix the Z-end stop (2 parts)

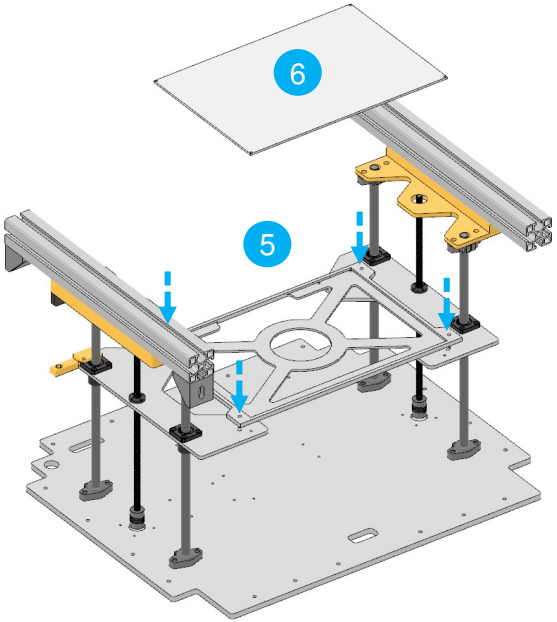

3 Fix the upper printed plates on the linear rod.

4 Fix the upper printed plate s on the linear rod. Then fix them with the extrusion

47 Guarantee ~47mm from Bracket corner

5 Fix the Aluminum Bed plate with the spring leveling nut.

6 Clamp-on the heated Bed + the mirror.

IV. Electronics & Wiring

STEP 11 Assemble the U-Mount extruder

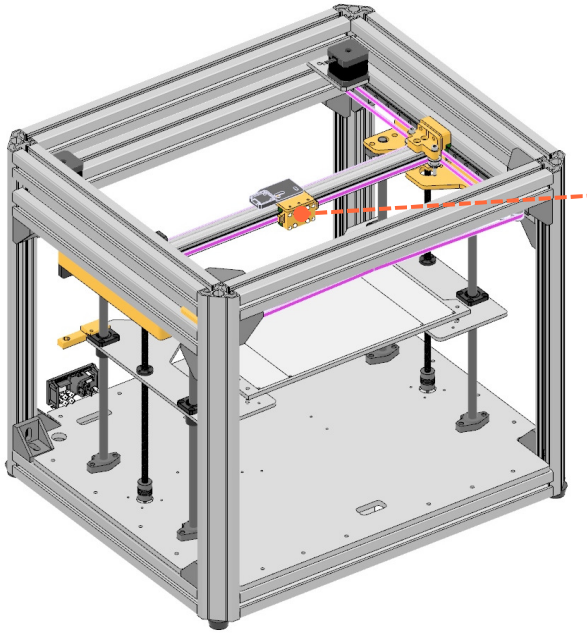

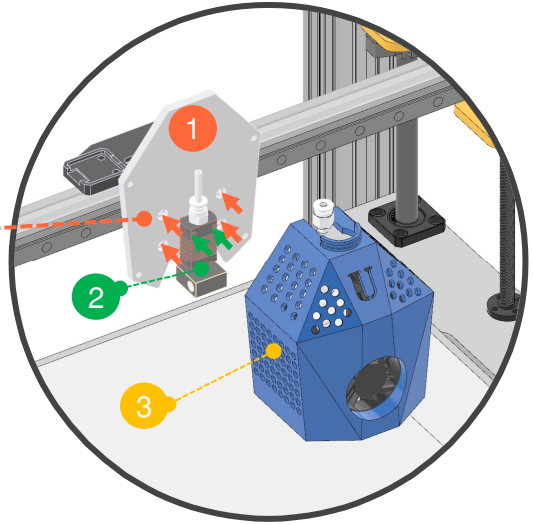

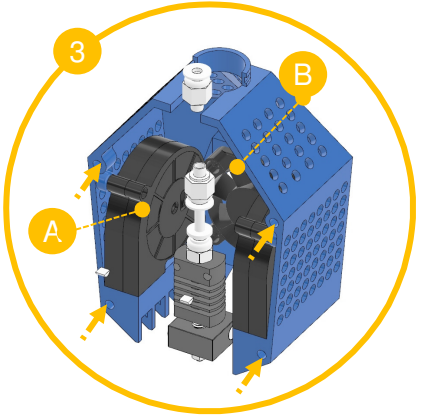

1. Fix the **Aluminum U- mount plate** on **U mount fixture Carriage**.
2. Fix the **Hot end** on **U mount fixture plate**.
3. Fix the **U mount extruder** on **U- mount plate** .

STEP 12 Assemble the Front Up panel + Back Down panel

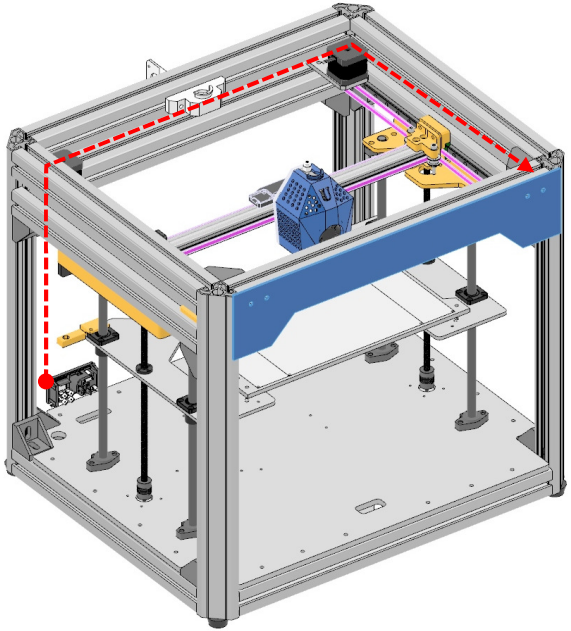

1

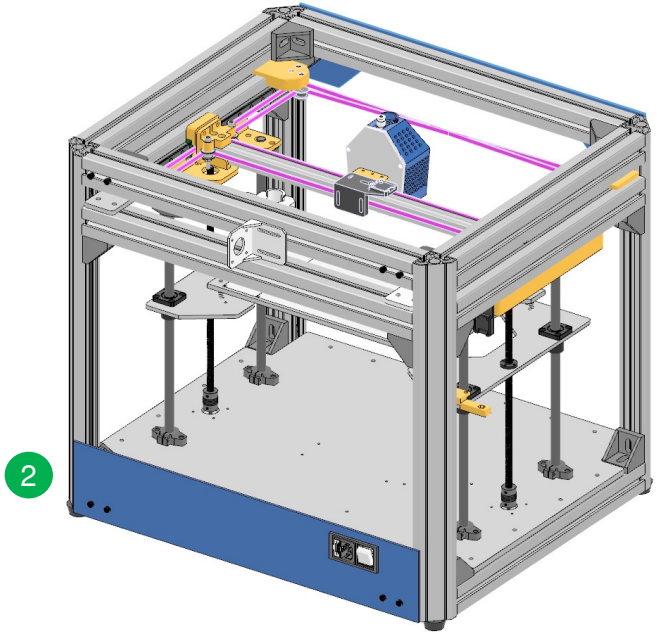

2

1 Fix the **Front Up panel** with **the LED Light** . Route the Led wires as shown.

2 Assemble the **Back Down panel** and fix **the machine switcher.**

STEP 13 Route the U mount extruder, XY Motors wires & Heated bed.

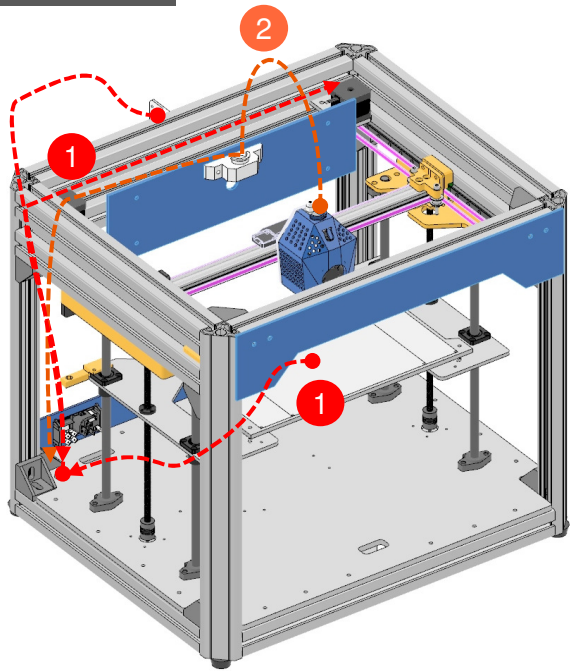

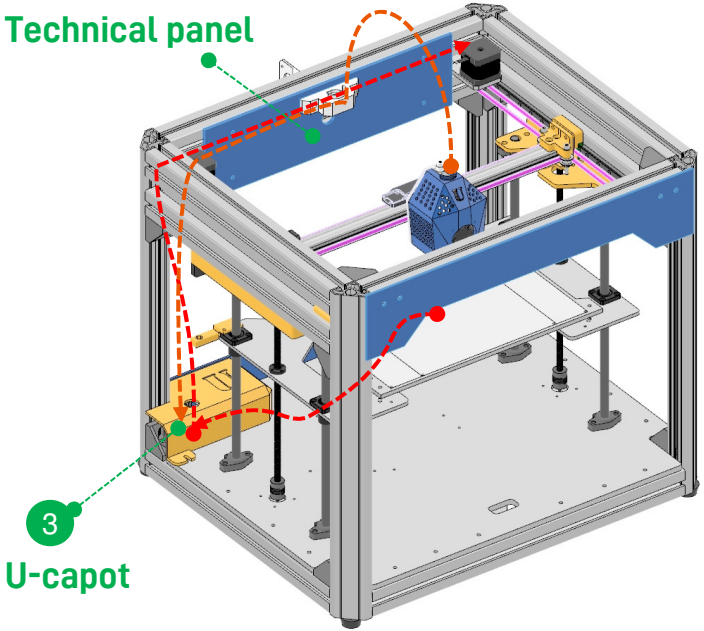

2 1 Route **U mount extruder** through the technical panel wires as shown.
Route **the XY Motors & Heated Bed plate & E motor wires.**

3 Assemble the **technical panel hiding all wires.**
Pass all wires through the U-capot then **Electronic panel void.**

STEP 14

Wiring Diagram

WARNING: CHECK YOUR CABLES. INCORRECT ENDSTOP WIRING CAN DAMAGE YOUR BOARD.

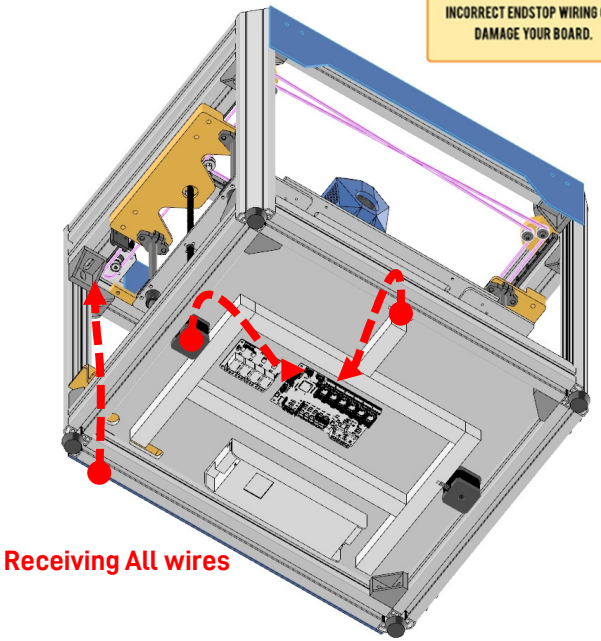

Receiving All wires

RUMBA32 v1.1

www.aus3d.com.au/rumba32

Specifications:

- STM32F446 Microcontroller
  180MHz, 512kB Flash, 128kB RAM
- 12/24V Compatible
  Separate input for heated bed power
- 6 x Stepper Driver Sockets
  SPI & UART Modes Supported
  Sensorless Homing Supported
- 1 x Heated Bed Output
  12/24V, up to 20A maximum
- 3 x Heater Outputs
  12/24V, up to 5A maximum
- 2 x Fan Outputs
  12/24V, up to 2A maximum
- 5 x Thermistor Inputs
  1 Heated Bed, 3 HotEnds, 1 Chamber
- LCD Expansion Headers
  Backwards compatible with RAMPS
- Internal 12V Regulator
  24V → 12V for fans, 2.5A max
- Internal 5V Regulator
  12/24V → 5V, 2A max

Aus3D

www.aus3d.com.au

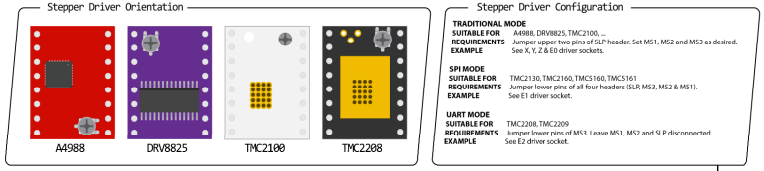

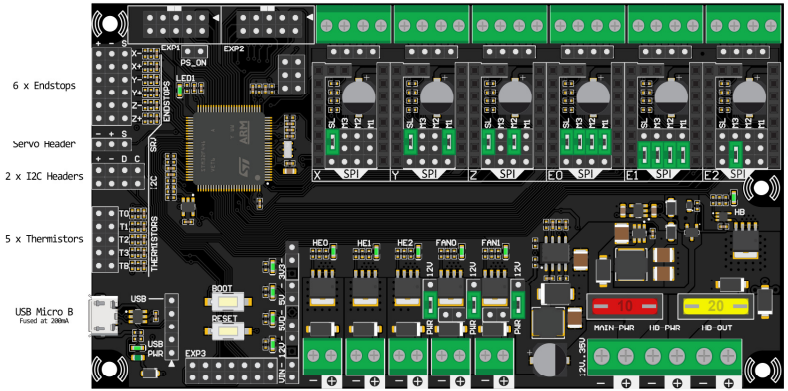

STEP 14

Wiring Diagram (Pinout)

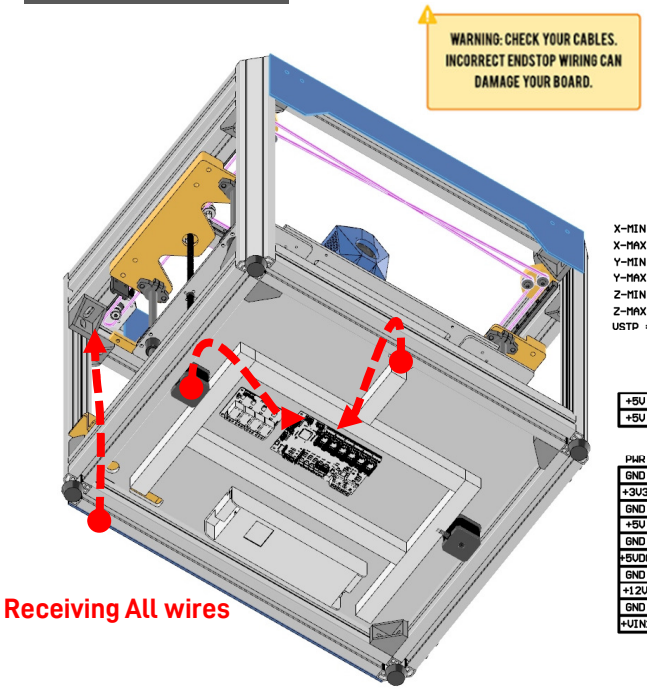

EXP1

GND	PE14	PE12	PE9	PE8
+5V	PE15	PE13	PE10	PE7

EXP2

GND	PB0	PB1	PB2	PA6 MISO
PC5	RST	PA7 MOSI	PA2	PA5 SCK

PS_ON

GND	PE11

SWD

PA13 SWDIO	+3V3
PA14 SWCLK	BT0
RST	GND

PIN \ DRV	X	Y	Z	E0	E1	E2
ENABLE	PC11	PE3	PB7	PC12	PD4	PD0
DIRECTION	PC15	PE6	PE2	PB6	PD7	PD3
STEP	PA0	PE5	PE1	PB5	PD6	PD2
SPI_CS UART_RX	PC14	PE4	PE0	PC13	PD5	PD1
UART_TX	PA14	PA13	PB10	PD11	PB3	PB4
DIAG	PB12 (X-MIN)	PB15 (Y-MIN)	PD9 (Z-MIN)	PB13 (X-MAX)	PD8 (Y-MAX)	PD10 (Z-MAX)

STEPPER MOTOR PINOUT

1B	1A	2A	2B

STEPPER DRIVER SOCKET PINOUT

LEFT			RIGHT
TRADITIONAL	SPI	UART	
ENABLE	ENABLE	ENABLE	VMOT
MS1	SPI-MOSI		GND
MS2	SPI-SCK		2B
MS3	SPI-CS	UART RX & TX (1K)	2A
RESET	SPI-MISO		1A
SLEEP			1B
STEP	STEP	STEP	VIO
DIRECTION	DIRECTION	DIRECTION	GND

DIAG PINOUT

	DIAG

STEPPER DRIVER JUMPERS

SLP	MS3	MS2	MS1
SLP	+3V3	+3V3	+3V3
RST	MS3	MS2	MS1
SPI-MISO	SPI-CS UART	SPI-SCK	SPI-MOSI

ENDSTOPS

X-MIN	USTP	GND	PB12
X-MAX	USTP	GND	PB13
Y-MIN	USTP	GND	PB15
Y-MAX	USTP	GND	PD8
Z-MIN	USTP	GND	PD9
Z-MAX	USTP	GND	PD10

USTP = 3.3V by default

SERVO

GND	+5V	PA15

I2C

+5V	GND	SDA	SCL
+5V	GND	SDA	SCL

THERMISTOR

T0	GND	PC4
T1	GND	PC3
T2	GND	PC2
T3	GND	PC1
TB	GND	PC0

PWR

GND
+3V3
GND
+5V
GND
+5VDC
GND
+12V
GND
+VIN1

USB

VBUS
DN
DP
GND
SHLD

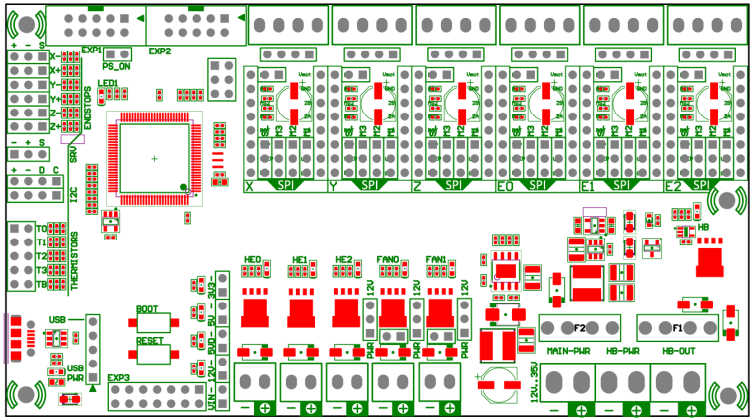

EXP3

PD13	PA9 U1TX	PB8 SCL	PA4	PD14	GND	+12V
PD12	PA10 U1RX	PB9 SDA	PA3	PD15	GND	+5V

HE0

- (PC6)	+ (VIN1)

HE1

- (PC7)	+ (VIN1)

HE2

- (PC8)	+VIN1 or +12V (per JMP)

FAN0

- (PC9)	+VIN1 or +12V (per JMP)

FAN1

- (PA8)	+VIN1 or +12V (per JMP)

JMP x3

+12V
<-
+VIN1

MAIN-PWR

GND	+VIN1

HB-PWR

GND	+VIN2

HB-OUT

- (PA1)	+ (VIN2)

VII. Framing Panels

STEP 15 Assemble the panels & handles

STEP 16 Assemble the Spool holder / Connect the Screen