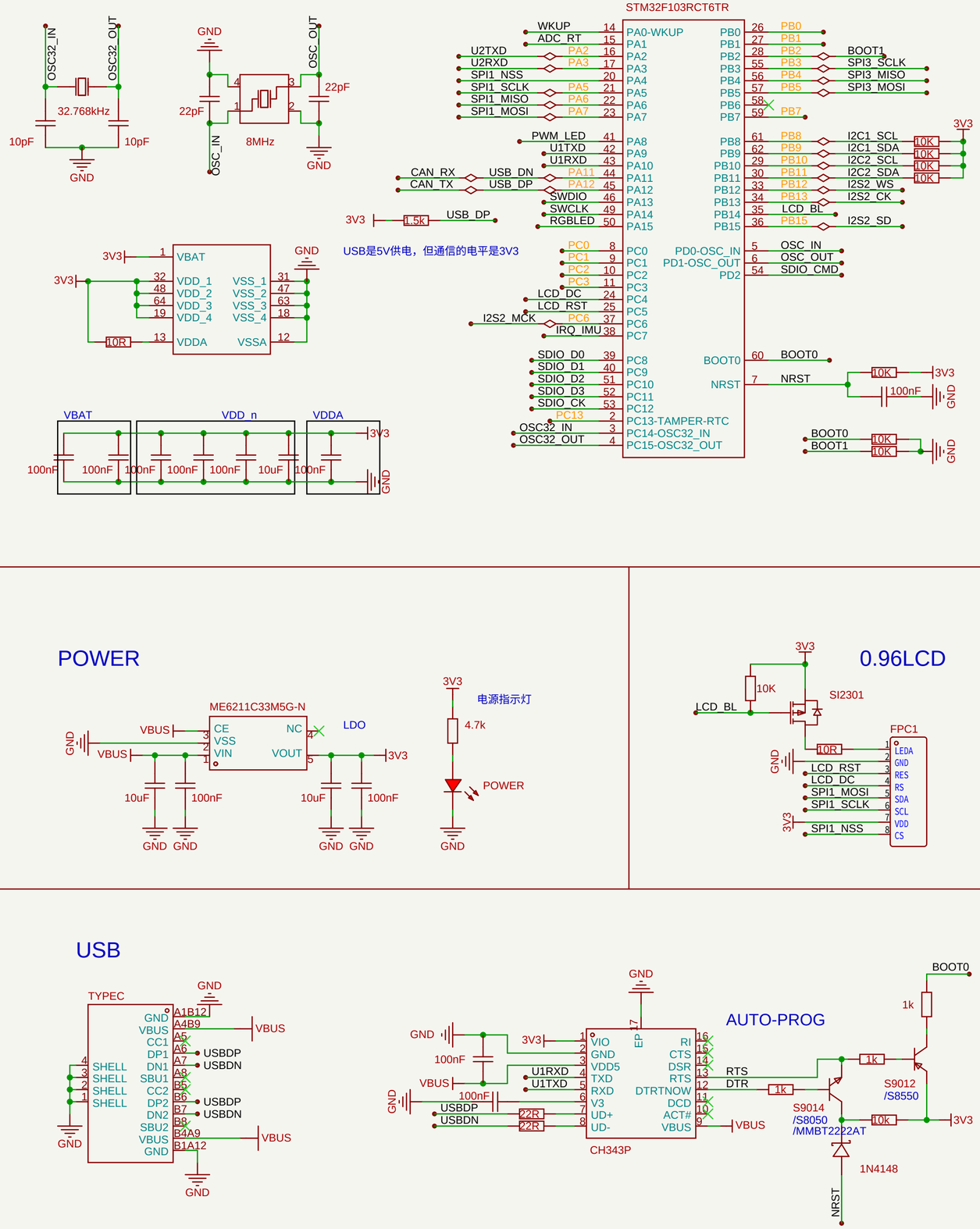

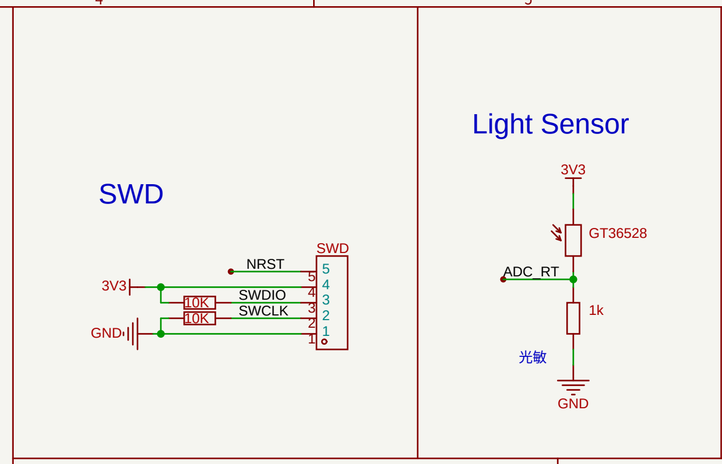

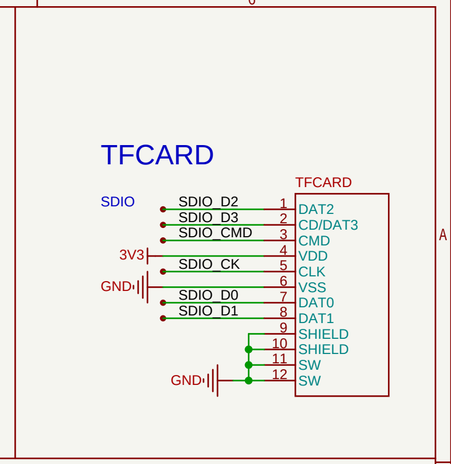

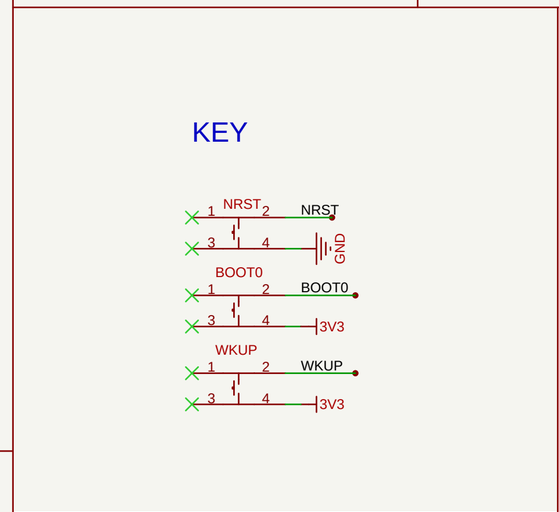

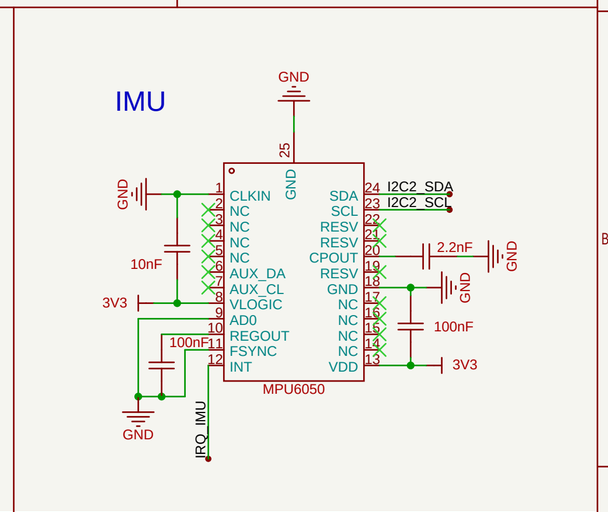

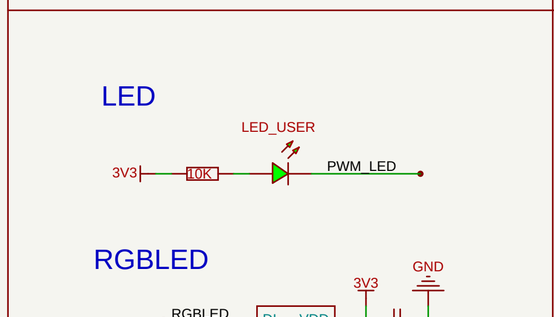

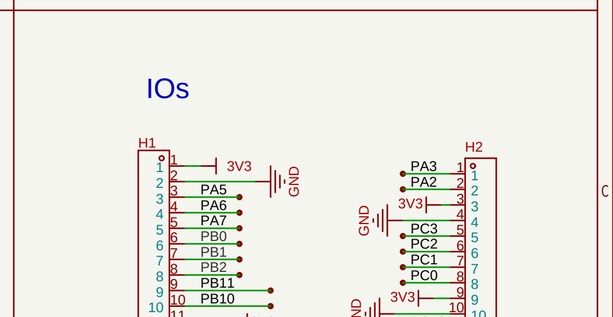

Schematic	Schematic1	Update Date	2022-12-18
		Create Date	2022-10-03
Page	P1	Part Number	
Drawed	STM32F103RCT6-CORE		
Reviewed			
		VER	SIZE	PAGE 1 OF 1
嘉立创EDA		V1.0	A3	嘉立创EDA