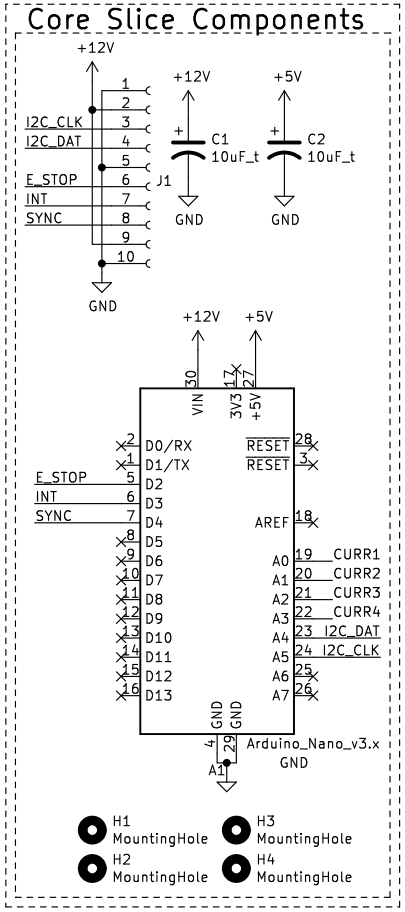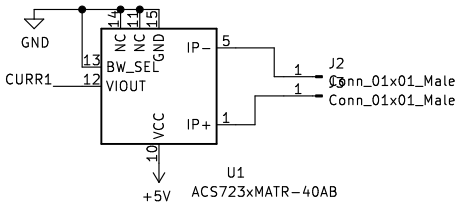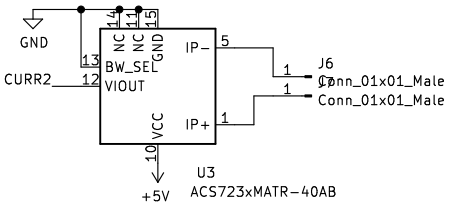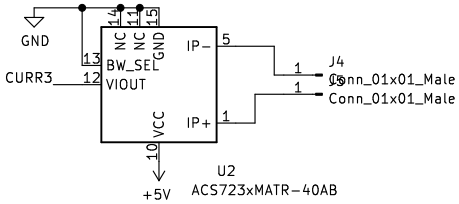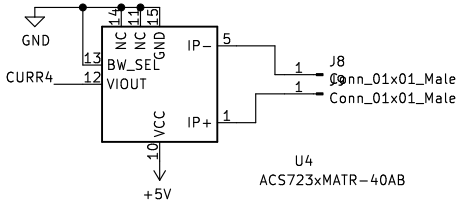Core Slice Components