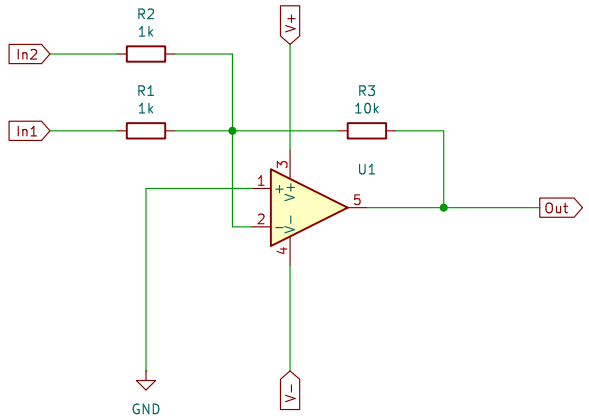

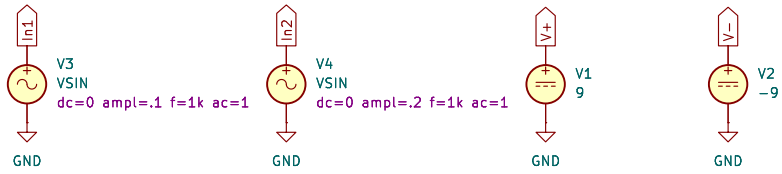

.tran 1u 5m

GitHub/OJStuff

Sheet: /

File: OPamp-adding-(.tran).kicad_sch

Title: OPamp adding

Size: A4	Date: 2024-05-27	**Rev: 2**
KiCad E.D.A. 8.0.2		Id: 1/1