IT314: Software Engineering
Lab 4: Class Modeling
ID: 202201253
Name: SMIT FEFAR

Question: 1

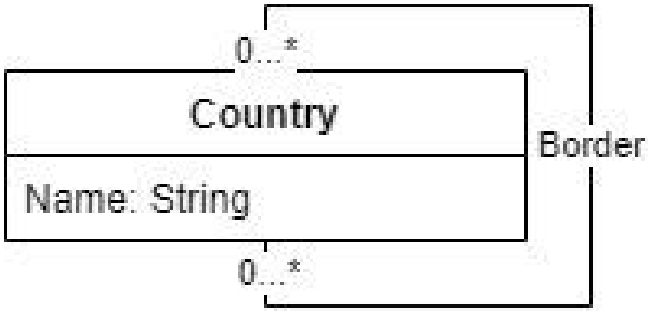

Question: 2

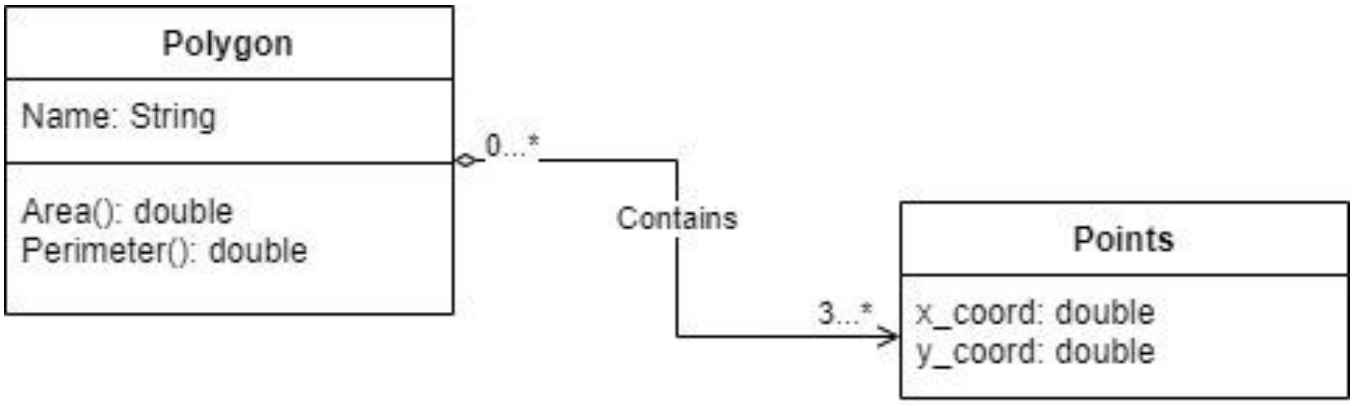

Question: 3

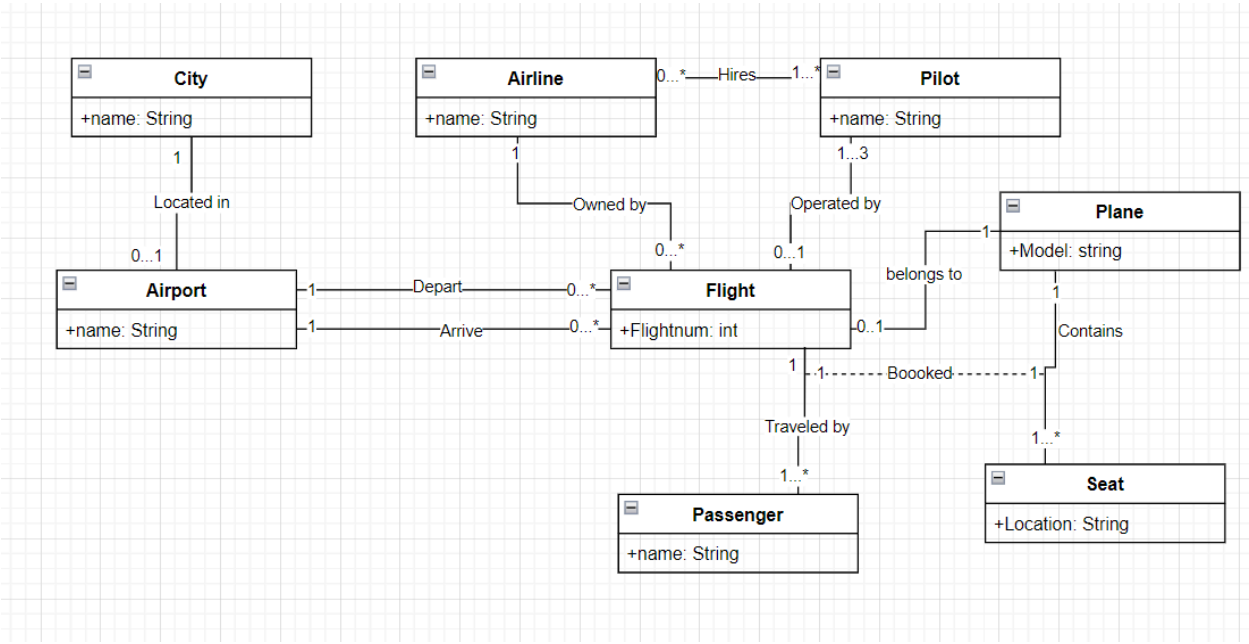
City
+name: String
Airline
+name: String
Pilot
+name: String
Hires
Located in
Owned by
Operated by
Plane
+Model: string
Airport
+name: String
Depart
Arrive
Flight
+Flightnum: int
belongs to
Contains
Boooked
Traveled by
Seat
+Location: String
Passenger
+name: String

Question: 4

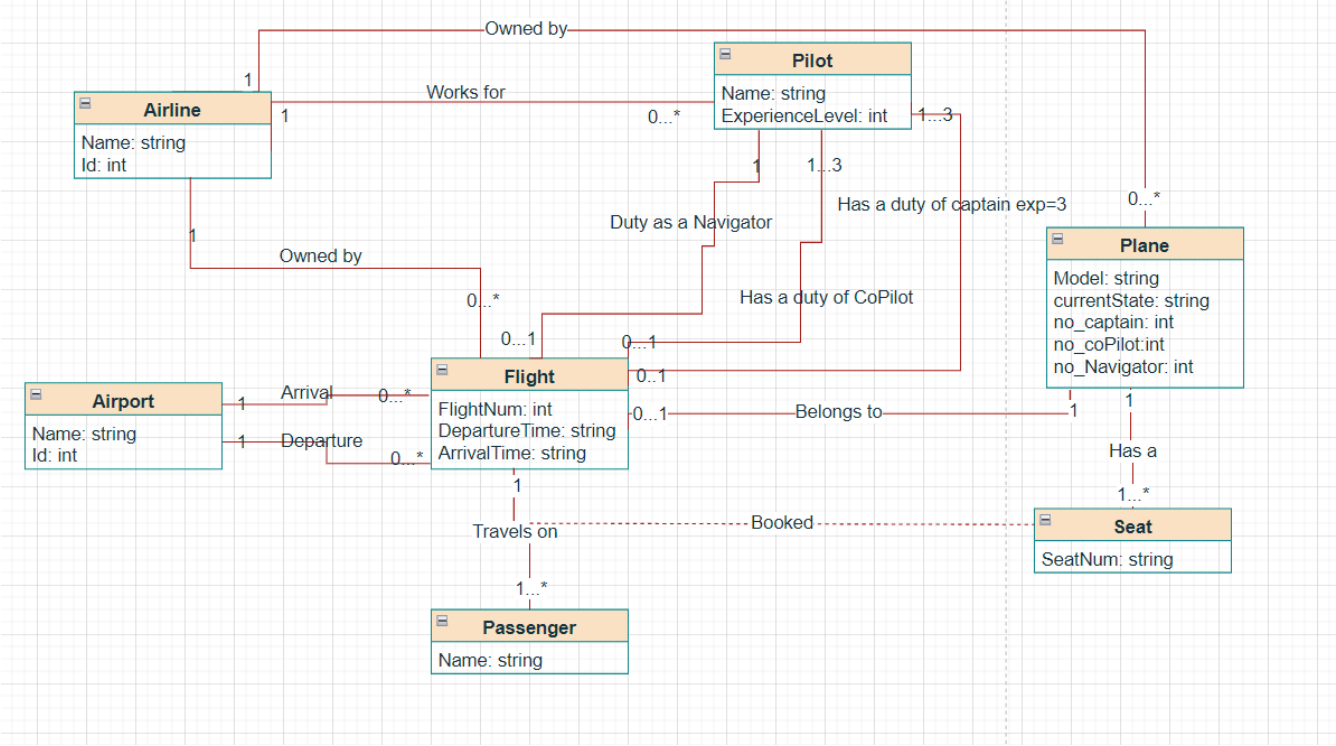
Owned by
Pilot
Name: string
ExperienceLevel: int
Works for
Airline
Name: string
Id: int
Duty as a Navigator
Has a duty of captain exp=3
Owned by
Plane
Model: string
currentState: string
no_captain: int
no_coPilot:int
no_Navigator: int
Has a duty of CoPilot
Airport
Name: string
Id: int
Arrival
Departure
Flight
FlightNum: int
DepartureTime: string
ArrivalTime: string
Belongs to
Has a
Travels on
Booked
Seat
SeatNum: string
Passenger
Name: string