ZIMSKI ROK 2016.

1. $U_{ab} = ?$

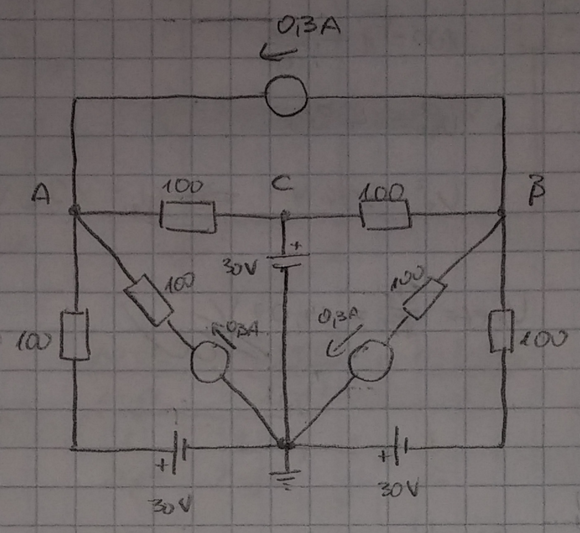

$$\varphi_a\left(\frac{1}{100}+\frac{1}{100}\right)-\varphi_c\left(\frac{1}{100}\right)=\frac{30}{100}+0{,}3+0{,}3 \quad /\cdot 100$$

$$\varphi_b\left(\frac{1}{100}+\frac{1}{100}\right)-\varphi_c\left(\frac{1}{100}\right)=-\frac{30}{100}-0{,}3-0{,}3 \quad /\cdot 100$$

$2\varphi_a-\varphi_c=30+30+30$

$2\varphi_a-30=90$

$2\varphi_a=120$

$\varphi_a=60\,V$

$2\varphi_b-\varphi_c=-30-30-30$

$2\varphi_b-30=-90$

$2\varphi_b=-60$

$\varphi_b=-30\,V$

$U_{ab}=\varphi_a-\varphi_b=60-(-30)$

$U_{ab}=90\,V$

2.

$R = X_L = X_C = 10\,\Omega$

$U_f = 380\ V$

$P = ?$

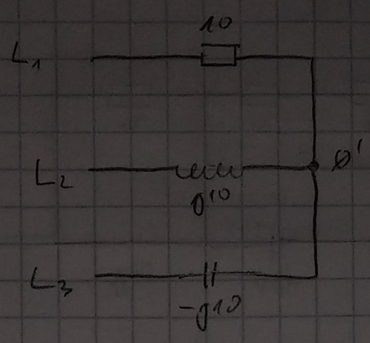

$U_f = 220\,V$

$$U_{0'0} = \frac{\frac{220\angle 0^\circ}{10} + \frac{220\angle -120^\circ}{j10} + \frac{220\angle -240^\circ}{-j10}}{\frac{1}{10} + \cancel{\frac{1}{j10}} + \cancel{\frac{1}{-j10}}} = \frac{-16{,}1}{\frac{1}{10}} = -161{,}05\,V$$

$U_R = 220\angle 0^\circ - U_{0'0} = 381\,V$

$P = \frac{U_R^2}{R} = 14440\,W$

3.

$P_{MAX}(R) = ?$

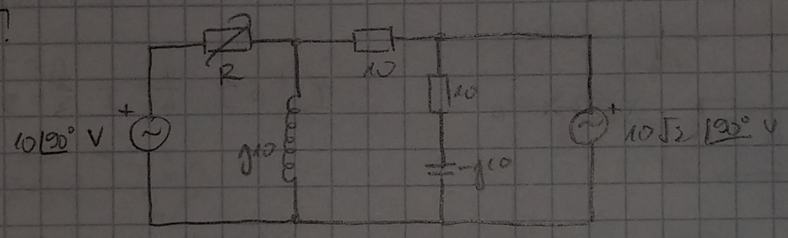

NORTON

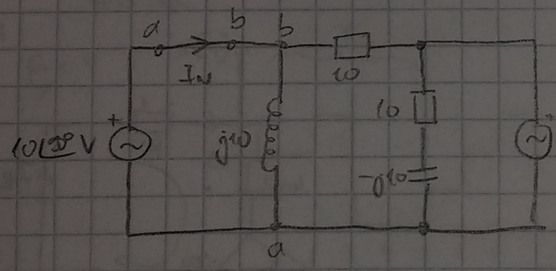

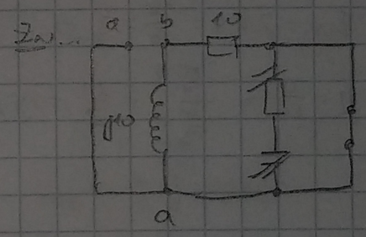

$Z_N = 10 \parallel j10$

$Z_N = 5 + j5\,\Omega$

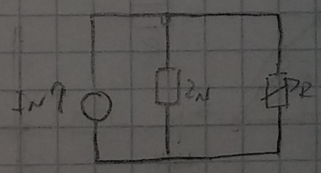

$R = 5\sqrt{2}\,\Omega$

$I_R = 0{,}5858\,A$

$P = I^2 \cdot R$

$P = 2{,}43\,W$

SUPERPOZICIJA

1)

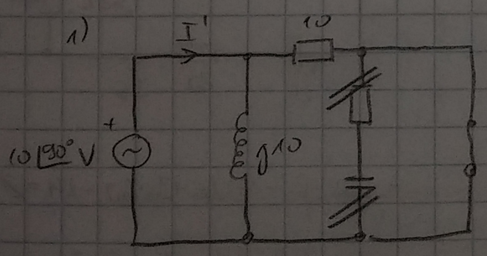

$Z_{UK} = 10 \parallel j10 = 5 + j5$

$I' = \frac{U}{Z_{UK}} = \sqrt{2}\angle 45^\circ\,A$

2)

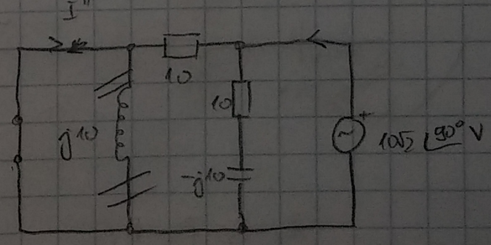

$Z_{UK} = 10 \parallel (10 - j10) = 6 - j2$

$I = \frac{U}{Z_{UK}} = \sqrt{5}\angle 108{,}43^\circ$

$I'' = -I \cdot \frac{10 - j10}{20 - j10} = -j\sqrt{2}\,A$

$I_N = I' + I'' = 1{,}0824\angle -22{,}5^\circ\,A$

4.

$I_{2\Omega} = ?$

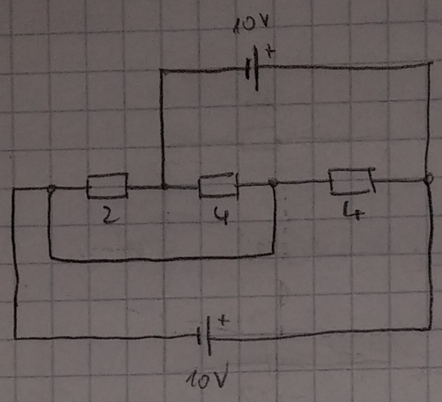

SUPERPOZICIJA

1)

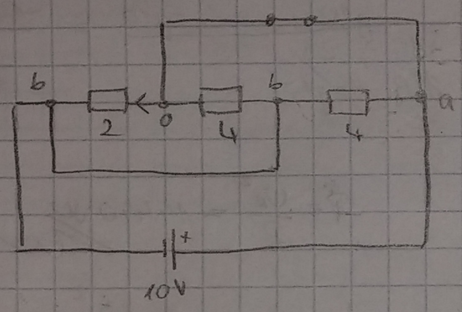

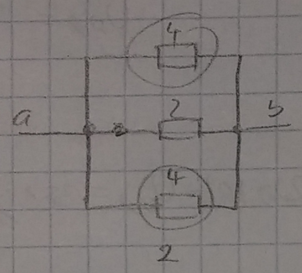

$G_{UK} = \frac{1}{4} + \frac{1}{2} + \frac{1}{4} = 1$

$R_{UK} = 1\ \Omega$

$I_{2\Omega}' = \frac{1}{2} I = 5A$

2)

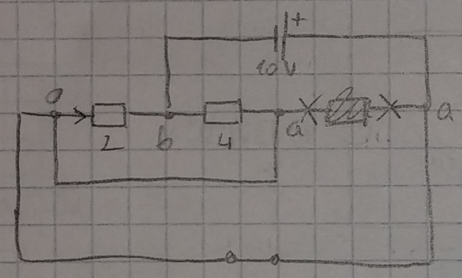

$I_{2\Omega}'' = I \cdot \frac{4}{6} = I \cdot \frac{2}{3} = 5\ \Omega$

$R_{UK} = 2 \| 4 = \frac{8}{6} = \frac{4}{3}\ \Omega$

$I = \frac{U}{R_{UK}} = \frac{\frac{10}{1}}{\frac{4}{3}} = \frac{10}{2} = 7{,}5\ A$

SUPROTNI SMJEROVI

$I_{2\Omega} = I_{2\Omega}' - I_{2\Omega}'' = 0\ A$

5.

$U_{AB} = 4\ V$

$R = ?$

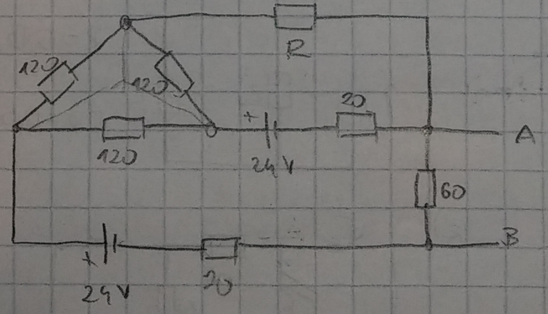

$\Rightarrow$

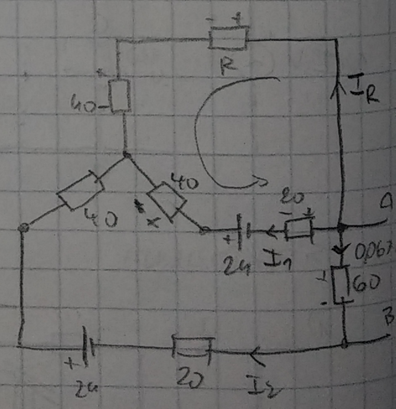

$\Delta \Rightarrow Y$

$R_{12} = R_{23} = R_{31} = 120\ \Omega$

$R_\Delta = 360\ \Omega$

$R_1 = R_2 = R_3 = R_Y$

$R_Y = 40\ \Omega$

$-I_R \cdot R - 40 I_R + I_1 \cdot 60 - 24 = 0$

$-I_1 \cdot 60 + \cancel{24} + I_2 \cdot 60 - \cancel{24} + I_2 \cdot 60$

$-60 I_1 = -120 I_2$

$I_1 = 2 I_2$

6. $I_{C_1 ef} = ?$

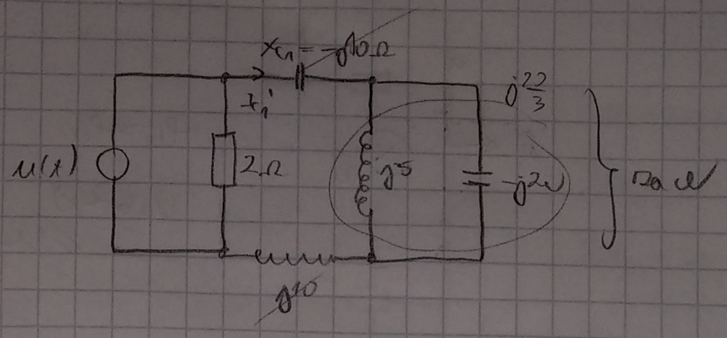

$$u(t) = 4\sqrt{2}\sin(\omega t) + \sqrt{2}\sin(2\omega t)\ [V]$$

1) ω

$$U_1 = \frac{4\sqrt{2}}{\sqrt{2}} = 4\,V$$

$$Z_{vk} = 2 \parallel \left(j\frac{20}{3}\right)$$

$$I = \frac{U_1}{Z_{vk}} = 2{,}088\angle -16{,}7^\circ\ A$$

$$= 2 - \frac{3}{5}j$$

$$I_{C_1}' = I \cdot \frac{2}{2 + j\frac{20}{3}} = -j\frac{3}{5}\,A$$

2) 2ω

$$U_2 = \frac{\sqrt{2}}{\sqrt{2}} = 1\,V$$

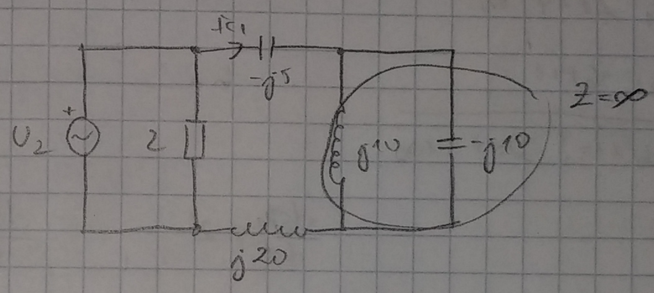

$$I_{C_1}'' = 0\,A$$

$$I_{C_1} = \left|-j\frac{3}{5}\right| = \frac{3}{5} = 0{,}6\,A$$

7. $\varepsilon = ?$

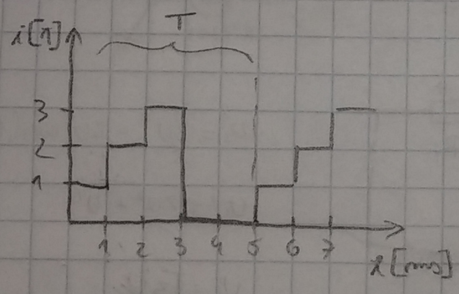

$$I_{SR} = \frac{1}{T}\int_0^T i(t)\,dt$$

$$I_{SR} = \frac{1}{T}\cdot(1+2+3) = \frac{6}{5}\,A$$

$$\varepsilon = \frac{I_{ef}}{I_{SR}}$$

$$I_{ef} = \sqrt{\frac{1}{T}\int_0^T i^2(t)\,dt}$$

$$\varepsilon = \frac{\frac{\sqrt{70}}{5}}{\frac{6}{5}} = 1{,}394$$

$$I_{ef} = \sqrt{\frac{1}{T}\left(1^2\cdot 1 + 2^2\cdot 1 + 3^2\cdot 1\right)}$$

$$I_{ef} = \sqrt{\frac{1}{5}\cdot 14} = \sqrt{\frac{14}{5}} = \frac{\sqrt{70}}{5}\,A$$

8.

$U_{ab} = ?$

(POLARITETI)

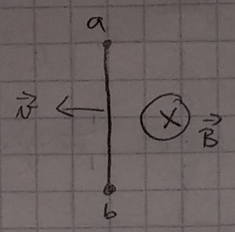

$\varphi_b > \varphi_a$

$U_{ab} < 0$

9.

$N_1 = 40$

$N_2 = 10$

$\Phi_1 = 2t + 4$ Vs

$\Phi_2 = -6t + 1$

$u_{ab}(t) = ?$ $0 \le t \le 10$ s

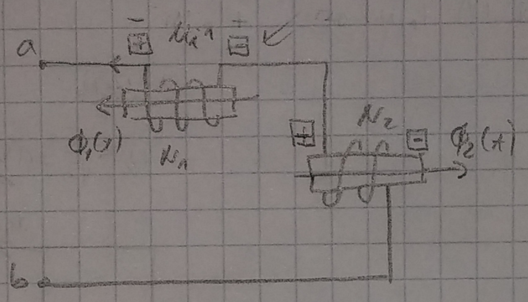

$\frac{d\Phi_1}{dt} = 2$ $\qquad$ $\frac{d\Phi_2}{dt} = -6$

$u_{i1} = -N_1 \frac{d\Phi}{dt} = -80$ V $\qquad$ $u_{i2} = -N_2 \cdot \frac{d\Phi_2}{dt} = +60$ V

$u_{ab} = u_{i2} + u_{i1} = 60 + (-80) = -20$ V

10.

$\omega = \sqrt{3} \cdot 10^3$ s^{-1}

$R = 90\,\Omega$

$\dot{U}_1 = \dot{U}_2 = U \angle 0°$ V

$\measuredangle(\dot{U}_1, \dot{U}_{AB}) = 60°$

$L = ?$

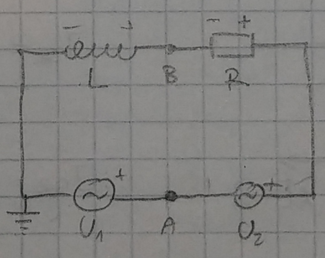

$U_L^2 = 2U^2 - 2U^2 \cos(120°)$

$U_L^2 = 2U^2 + U^2$

$U_L = \sqrt{3}\,U$

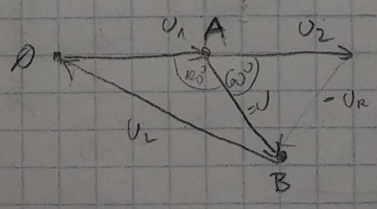

$U_L X_L = U \cdot R$

$U\sqrt{3}\,X_L = U R$

$X_L = \frac{\sqrt{3}}{3} R = 30\sqrt{3}$

$\alpha_i = -60°$ $\qquad$ $\operatorname{tg} \varphi = \frac{X_L}{R}$

$\varphi = -\alpha_i = 60°$

$X_L = \sqrt{3}\,R$

$X_L = \omega L$

$L = \frac{X_L}{\omega} = \frac{30\sqrt{3}}{\sqrt{3} \cdot 1000} = 30$ mH

11.

$U_f = 400\,V$

$R = 90\,\Omega$

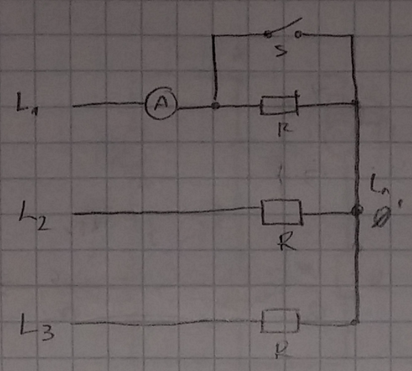

$U_f = 231\,V$

$U_{f_{12}} = 400\angle -120^\circ$

$U_{f_{31}} = 400\angle 120^\circ\,V$

1) S ⊃

$U_{00'} = 0$

2) S ⊃

$I_2 = 4{,}4426\angle -120^\circ$

$I_3 = 4{,}444\angle 120^\circ$

$I_A = I_2 + I_3$

$I_A = 7{,}7\,A$

12.

$U_V = ?$

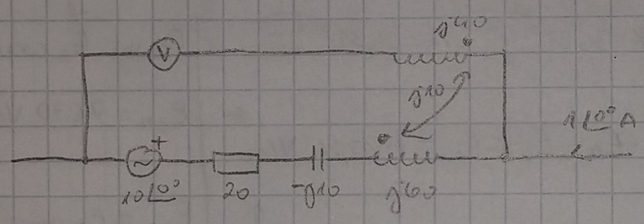

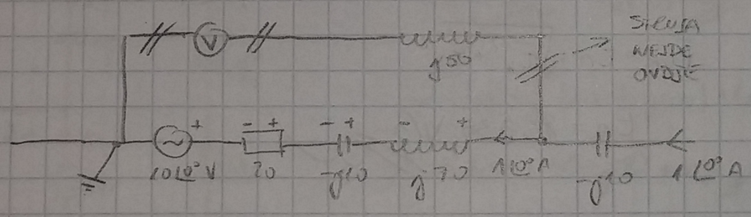

$U_V = 0 + 10 + 20 - j10 + j70$

$U_V = 30\sqrt{5}\,V$

13.

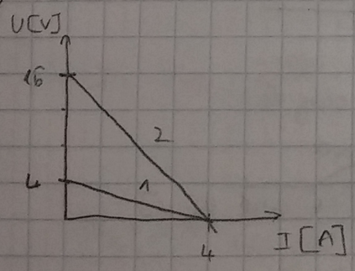

R_T na (2) → $I_T = 2\,I_T$ na (1) $R_T = ?$

(1) $R_i = \frac{4}{4} = 1\,\Omega$

(2) $R_i = \frac{16}{4} = 4\,\Omega$

$\frac{U_2}{R_{i_2} + R_T} = 2 \cdot \frac{U_1}{R_{i_1} + R_T}$

$\frac{16}{4 + R_T} = \frac{8}{1 + R_T}$

$16 + 16R_T = 32 + 8R_T$

$8R_T = 16$

$R_T = 2\,\Omega$

14.

$Q_1(0,0) = 2\,mAs$

$Q_2(6,0) = 2\,mAs$

$E(A) = ?$

$A(4,3)$

x, y [cm]

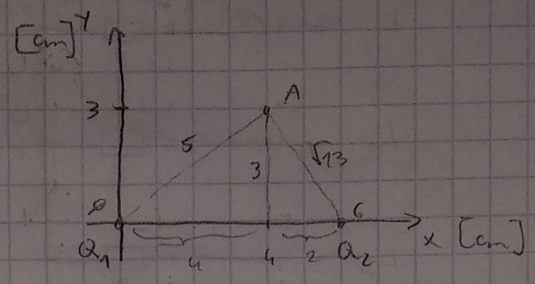

$\cos\alpha = \frac{E_{1H}}{E_1}$ $\sin\alpha = \frac{E_{1V}}{E_1}$

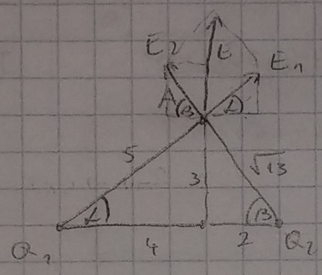

$E_1 = \frac{Q_1}{4\pi\varepsilon r^2}$

$E_1 = 7190{,}19$ V/m

$E_{1H} = E_1 \cos\alpha$

$E_{1H} = 5752{,}14$ V/m

$E_{1V} = E_1 \sin\alpha$

$E_{1V} = 4314{,}12$ V/m

$E_2 = \frac{Q_2}{4\pi\varepsilon r^2}$

$E_2 = 13827{,}3$ V/m

$\alpha = 36{,}87°$ $\beta = 56{,}31°$

$E_{2H} = E_2 \cos\beta$

$E_{2H} = 7670$ V/m

$E_{2V} = E_2 \sin\beta$

$E_{2V} = 11505{,}02$ V/m

$E_H = E_{2H} - E_{1H} = 1917{,}86$ V/m

$E_V = E_{1V} + E_{2V} = 15819{,}14$ V/m

$E_{UK} = E_A = \sqrt{E_H^2 + E_V^2}$

$E_A = 15935$ V/m

15.

$I = -0{,}01\,U + 0{,}04$ A → 12VOR

$R_s = ?$

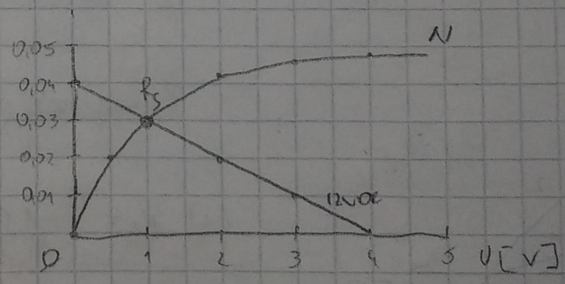

$R_s = \frac{U}{I} = \frac{1}{0{,}03} = 33{,}33\ \Omega$

16.

$R = X_L = X_C = 100\,\Omega$

$\dot{U} = j10\ V$

$I_N, Z_N = ?\ (A,B)$

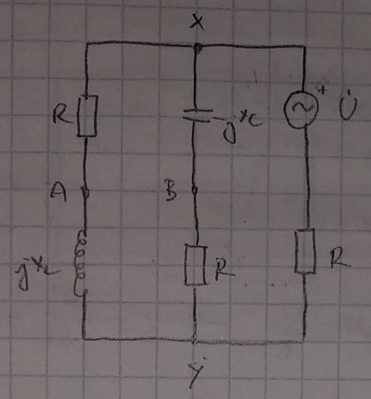

NORTON

Z_N...

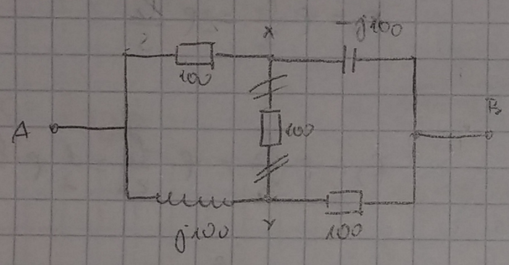

MOST U RAVNOTEŽI

$Z_N = (100 - j100) \parallel (100 + j100) = 100\,\Omega$

I_N...

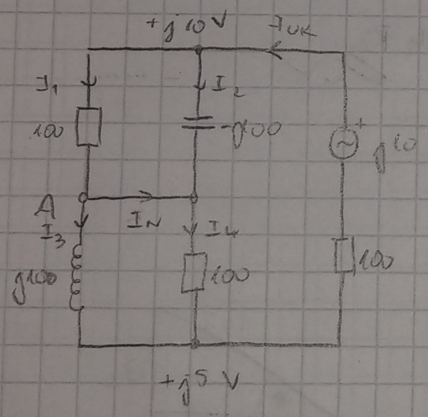

$I_{UK} = \frac{j10}{Z_{UK}} = j\frac{1}{20}\ A$

$Z_{UK} = 100 + [(100 \parallel -j100) + (100 \parallel j100)]$

$Z_{UK} = 100 + 50 - \cancel{j50} + 50 + \cancel{j50} = 200\,\Omega$

$I_1 = I_{UK} \cdot \frac{-j100}{100 - j100} = \frac{\sqrt{2}}{40} \angle 45^\circ$

$I_N = I_1 - I_3 = 0\ A$

$I_2 = I_{UK} \cdot \frac{100}{100 - j100} = \frac{\sqrt{2}}{40} \angle 135^\circ$

$I_4 = I_{UK} \cdot \frac{j100}{100 + j100} = \frac{\sqrt{2}}{40} \angle 135^\circ$

$I_3 = I_{UK} \cdot \frac{100}{100 + j100} = \frac{\sqrt{2}}{40} \angle 45^\circ$

(17.)

$d = 1\,mm$

$F = 400\,mN$

$Q = 100\,mAs$

$C = ?$

$W = F \cdot d = 4 \cdot 10^{-4}\,J$

$W = W_C = \frac{Q^2}{2C}$

$2W = \frac{Q^2}{C} \rightarrow C = \frac{Q^2}{2W} = 12{,}5\,pF$

(18.)

$S_1 = S$

$S_2 = 2S$

$V_1 = V_2$

$\frac{R_1}{R_2} = ?$

$V_1 = V_2$

$S_1 l_1 = S_2 l_2$

$\cancel{S} l_1 = 2\cancel{S} l_2$

$l_1 = 2 l_2$

$l_1 = l_2 = l$

$R_1 = \rho \frac{l_1}{S_1} = 2\rho \cdot \frac{l_2}{S}$

$R_2 = \rho \frac{l_2}{S_2} = \rho \cdot \frac{l_2}{2S} = \frac{1}{2}\rho \frac{l_2}{S}$

$\frac{R_1}{R_2} = \frac{2\rho \frac{l_2}{S}}{\frac{1}{2}\rho \frac{l_2}{S}} = 4$

$R_1 = 4 R_2$

(19.)

$P = 1\,kW$

$\cos\varphi = 0{,}707$ (ind.)

$\cos\varphi' = 0{,}95$ (ind.)

$U = 230\,V$

$f = 50\,Hz$

$C = ?$

$\omega = 100\pi\ rad/s$

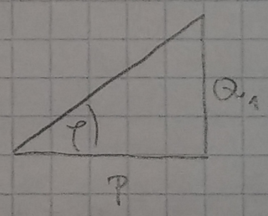

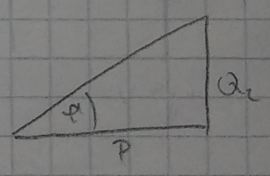

$\varphi = 45°$

$\varphi' = 18{,}19°$

$tg\,\varphi = \frac{Q_1}{P}$

$tg\,\varphi' = \frac{Q_2}{P}$

$Q_1 = P\,tg\,\varphi$

$Q_2 = P\,tg\,\varphi'$

$Q_1 = 1000\,VAr$ (ind.)

$Q_2 = 328{,}68\,VAr$ (ind.)

$Q_C = Q_1 - Q_2 = 671{,}32\,VAr$

$Q_C = \frac{U^2}{X_C} = \frac{U^2}{\frac{1}{\omega C}} = U^2 \omega C \rightarrow C = \frac{Q_C}{\omega U^2} = 40{,}4\,\mu F$

(20.) $u_{ab}(t=3ms)=?$

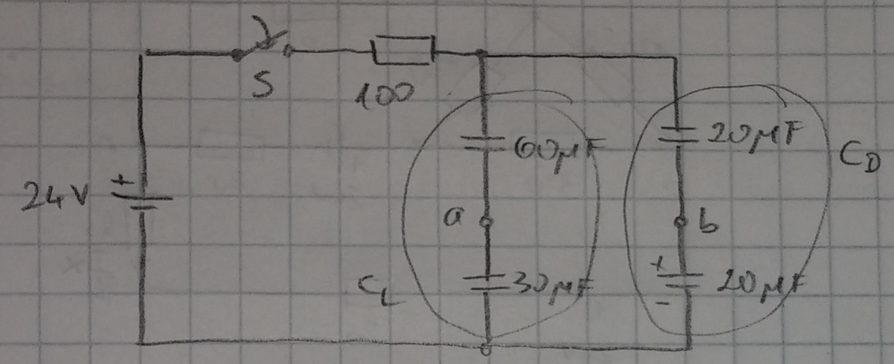

$C_L = \frac{60 \cdot 30}{90} = 20\mu F$ $\qquad$ $C_D = \frac{20 \cdot 20}{40} = 10\mu F$

$U = \frac{Q}{C}$

$C_{ek} = C_L + C_D = 30\mu F$

$\tau = RC = 3ms$

$u_C(t) = U(1-e^{-t}) = 24 - 8{,}83 = 15{,}17\,V$

$Q_L = C_L \cdot u_C(t) = 303{,}42\,\mu As$ $\qquad$ $Q_D = C_D \cdot u_C(t) = 151{,}71\,\mu As$

$U_{ab} = -\frac{Q_D}{20\mu F} + \frac{Q_L}{30\mu F} = -7{,}585 + 10{,}114 = 2{,}53\,V$

6. (OPET)

$U_{AB} = 4V$

$R = ?$

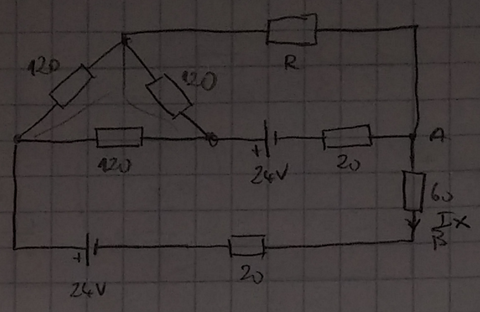

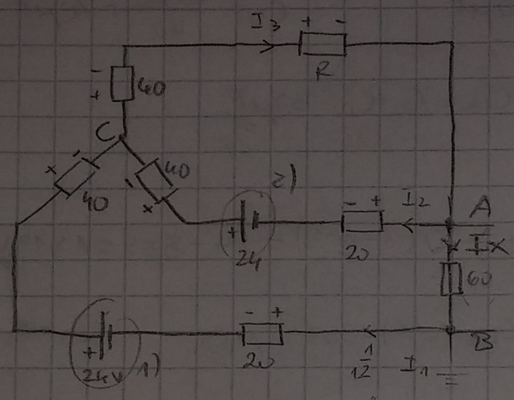

$I_x = \frac{4}{60} = \frac{1}{12}\ A$

$-I_1 \cdot 20 + 24 - I_1 \cdot 40 + I_2 \cdot 40 - 24 + I_2 \cdot 20 = U_{AB}$

$-60 \cdot I_1 + 60 \cdot I_2 = 4$

$60\, I_2 = 9$

$I_2 = \frac{3}{20}\ A$

$I_3 = I_1 + I_2 = \frac{7}{30}\ A$

SUPERPOZICIJA

1)

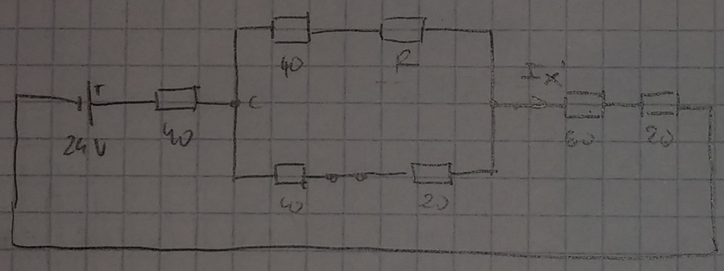

$R_{UK} = 120 + \frac{(40+R) \cdot 60}{40+R+60} =$

$R_{UK} = 120 + \frac{60 \cdot (40+R)}{100+R}$

$I_x' = \frac{U}{R_{UK}} = \frac{24}{120 + \frac{60 \cdot (40+R)}{100+R}}$

2)

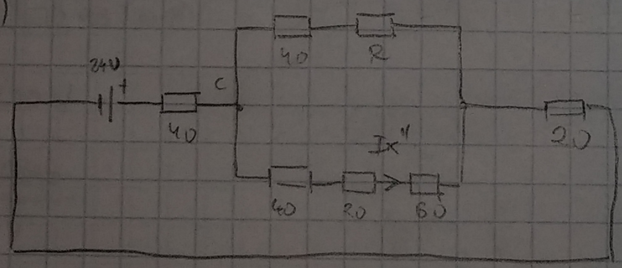

$R_{UK} = 60 + \frac{(40+R) \cdot 120}{R+160}$

$I = \frac{U}{R_{UK}} = \frac{24}{60 + \frac{120 \cdot (40+R)}{160+R}}$ $\frac{60(160+R) + 120(40+}{160+R}$

$I_x = I_x' - I_x'' = \frac{1}{15}$

$I_x'' = I \cdot \frac{40+R}{160+R} = \frac{24 \cdot (160+R)}{60(160+R) + 120 \cdot (40+R)} \cdot \frac{40+R}{160+R}$

$I_x'' = \frac{24 \cdot (40+R)}{60(160+R) + 120(40+R)}$

$\frac{24(100+R)}{120(100+R) + 60(40+R)} - \frac{24(40+R)}{60(160+R) + 120(40+R)} = \frac{1}{15}$

$\frac{6\,\cancel{24}(100+R)}{\cancel{60}(200+2R+40+R)} - \frac{6\,\cancel{24}(40+R)}{\cancel{60}(160+R+80+2R)} = \frac{1}{\cancel{15}}$ $/ \cdot 15$

$\frac{6(100+R)}{240+3R} - \frac{6(40+R)}{240+3R} = 1$

$$600 + \cancel{6R} - 240 - \cancel{6R} = 240 + 3R$$

$$3R = 600 - 480$$

$$3R = 120 \rightarrow R = 40\,\Omega$$