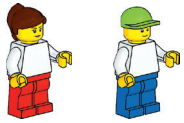

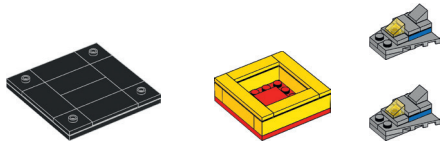

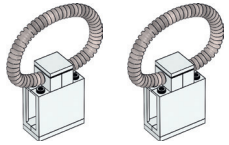

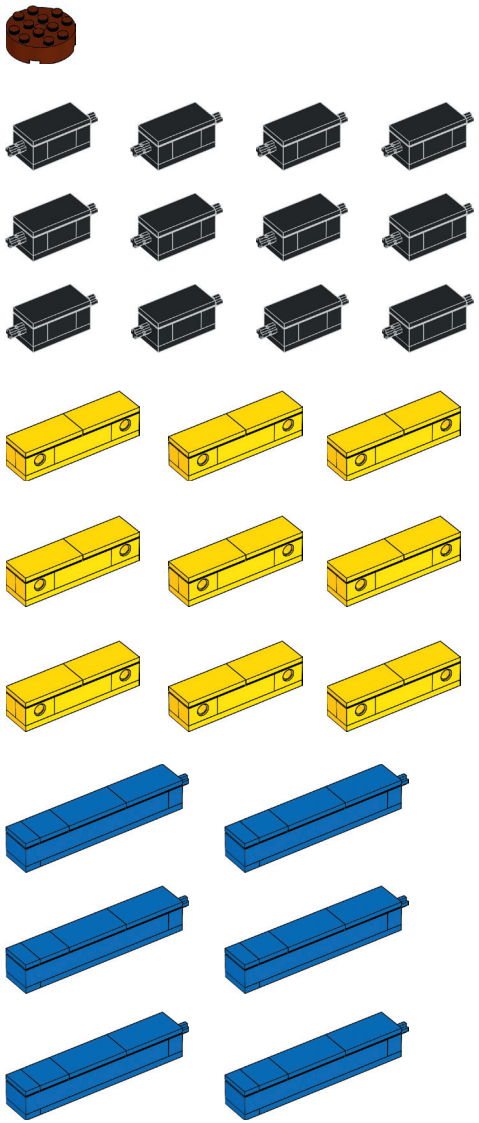

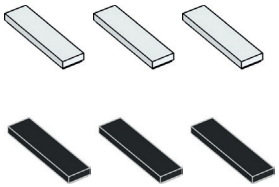

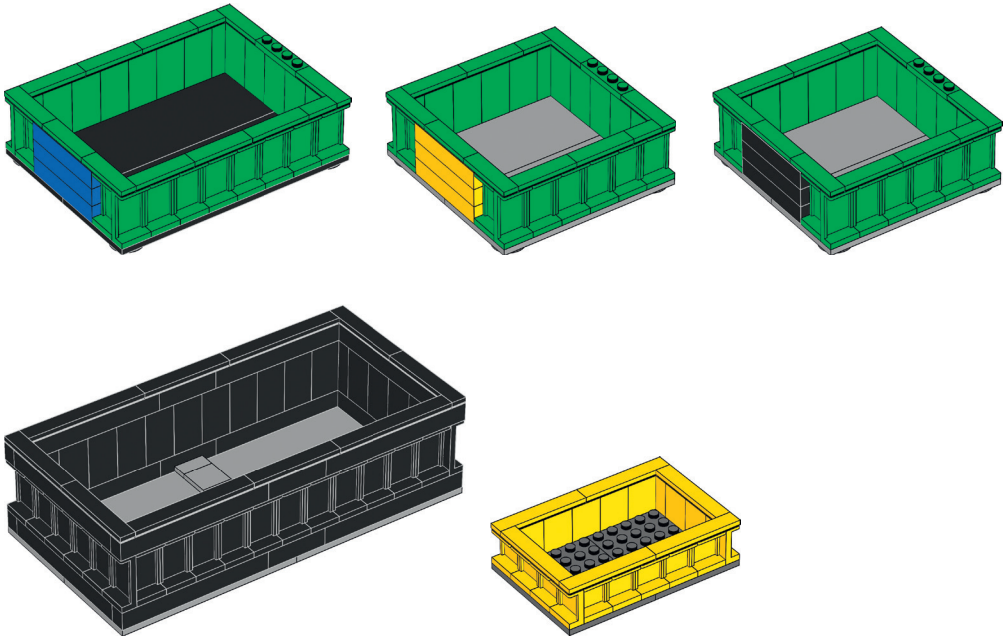

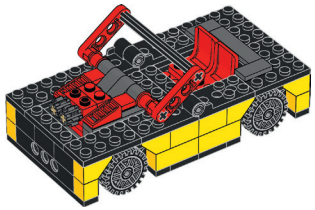

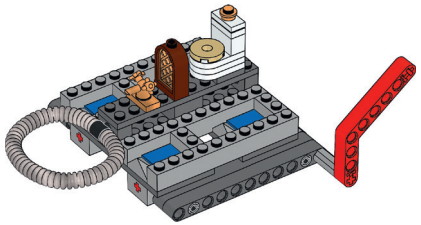

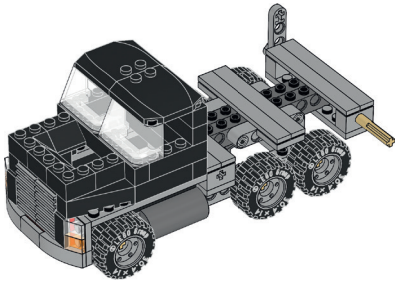

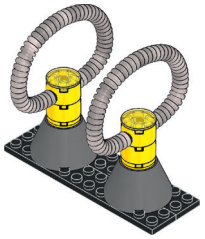

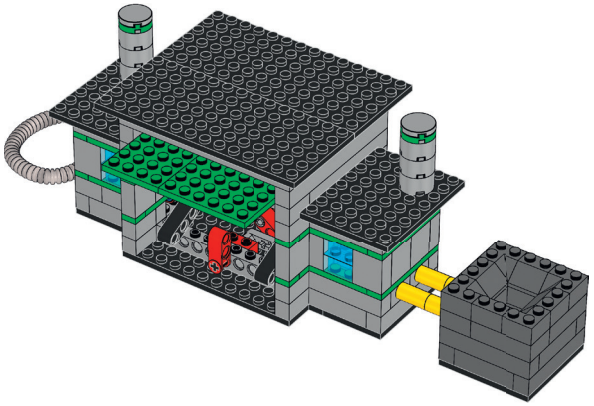

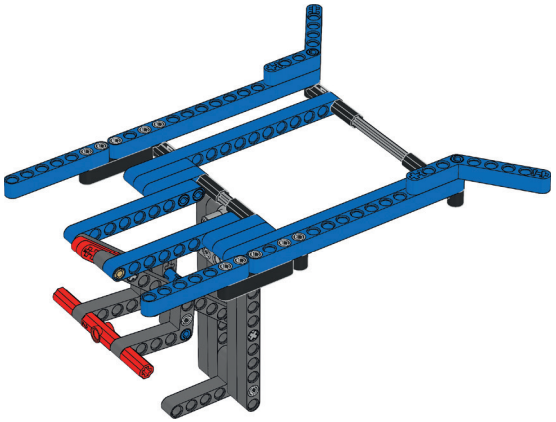

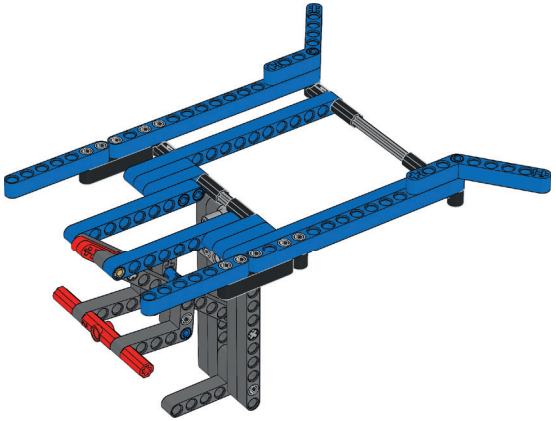

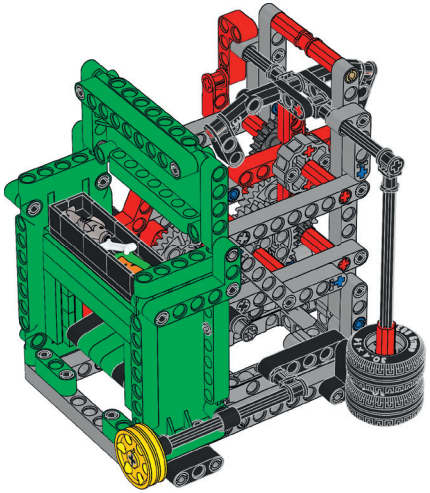

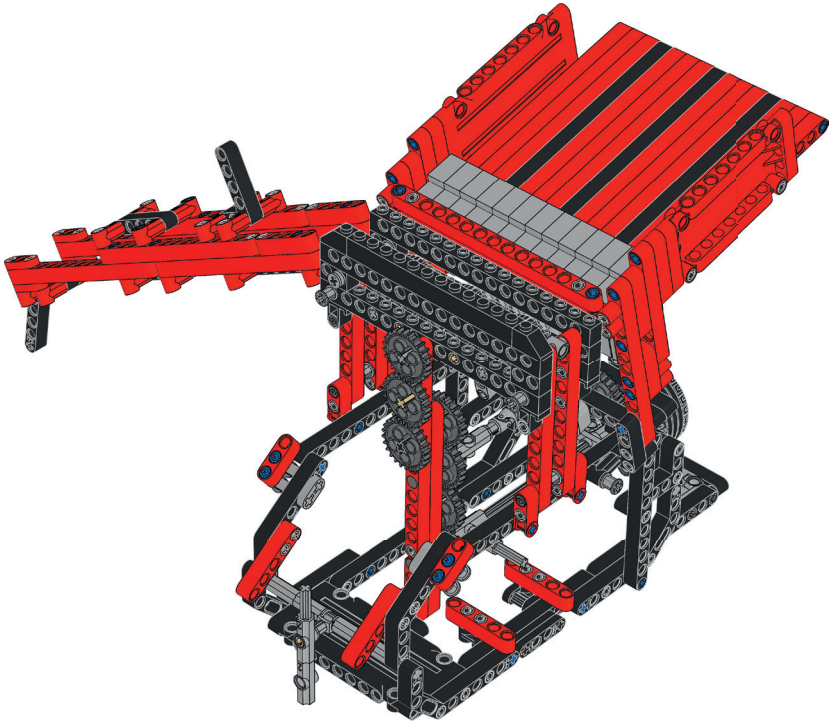

LEGO and the LEGO logo are trademarks of the/sont des marques de commerce du/son marcas registradas de LEGO Group. ©2015 The LEGO Group.

The *FIRST*® logo is a registered trademark of the/Le logo *FIRST*® est une marquee depose de la/El logotipo de *FIRST*® es una marca commercial registrada de U.S. Foundation For Inspiration and Recognition of Science and Technology.