# NAU88C10
# DataSheet

*The information described in this document is the exclusive intellectual property of*
*Nuvoton Technology Corporation and shall not be reproduced without permission from Nuvoton.*

*Nuvoton is providing this document only for reference purposes of Audio Product Line based system design.*
*Nuvoton assumes no responsibility for errors or omissions.*
*All data and specifications are subject to change without notice.*

For additional information or questions, please contact: Nuvoton Technology Corporation.
www.nuvoton.com

# TABLE OF CONTENT

**TABLE OF CONTENT** ..... 2
1. FEATURE ..... 8
2. GENERAL DESCRIPTION ..... 9
3. PART INFORMATION ..... 10
4. BLOCK DIAGRAM ..... 12
5. ELECTRICAL CHARACTERISTICS ..... 14
**5.1 Absolute Maximum Ratings** ..... 14
**5.2 Operating Conditions** ..... 14
**5.3 Electrical Parameters** ..... 15
6. FUNCTIONAL DESCRIPTION ..... 18
6.1 Input Path ..... 18
**6.1.1 The differential microphone input (MIC- & MIC+ pins)** ..... 18
**6.1.1.1 Positive Microphone Input (MIC+)** ..... 19
**6.1.1.2 Negative Microphone Input (MIC-)** ..... 20
**6.1.1.3 PGA Gain Control** ..... 20
**6.1.2 PGA Boost / Mixer Stage** ..... 21
**6.2 Microphone Biasing** ..... 22
**6.3 ADC Digital Filter Block** ..... 23
**6.3.1 Programmable High Pass Filter (HPF)** ..... 24
**6.3.2 Programmable Notch Filter (NF)** ..... 25
**6.3.3 Digital ADC Gain Control** ..... 25
**6.4 Programmable Gain Amplifier (PGA)** ..... 26
**6.4.1 Automatic level control (ALC)** ..... 26
**6.4.1.1 Normal Mode** ..... 29
**6.4.1.2 ALC Hold Time (Normal mode Only)** ..... 29
**6.4.2 Peak Limiter Mode** ..... 30
**6.4.3 Attack Time** ..... 31
**6.4.4 Decay Times** ..... 31
**6.4.5 Noise gate (normal mode only)** ..... 31
**6.4.6 Zero Crossing** ..... 32
**6.5 DAC Digital Filter Block** ..... 33
**6.5.1 DAC Soft Mute** ..... 34
**6.5.2 DAC Auto Mute** ..... 34
**6.5.3 DAC Sampling / Oversampling rate, Polarity, DAC Volume control and Digital Pass-through** ..... 34
**6.5.4 Hi-Fi DAC De-Emphasis and Gain Control** ..... 35
**6.5.5 Digital DAC Output Peak Limiter** ..... 35
**6.5.6 Volume Boost** ..... 36
**6.5.7 5-Band Equalizer** ..... 36
**6.6 Analog Outputs** ..... 37
**6.6.1 Speaker Mixer Outputs** ..... 37
**6.6.2 Mono Mixer Output** ..... 38
**6.6.3 Differential Output Configuration** ..... 39
**6.6.4 Unused Analog I/O** ..... 40
**6.7 General Purpose Control** ..... 42
**6.7.1 Slow Timer Clock** ..... 42

6.8 Clock Generation Block ....42
6.9 Control Interface ....46
6.9.1 2-WIRE Serial Control (I2C Style Interface) ....46
6.9.1.1 2-WIRE Protocol Convention ....46
6.9.1.2 2-WIRE Write Operation ....47
6.9.1.3 2-WIRE Operation ....47
6.10 Digital Audio Interfaces ....48
6.10.1 Right Justified audio data ....49
6.10.2 Left Justified audio data ....50
6.10.3 I2S audio data ....51
6.10.4 PCM audio data ....52
6.10.5 PCM Time Slot audio data ....53
6.10.6 Companding ....54
6.11 Power Supply ....55
6.11.1 Power-On Reset ....55
6.11.2 Power Related Software Considerations ....55
6.11.3 Software Reset ....56
6.11.4 Power Up/Down Sequencing ....56
6.11.5 Reference Impedance (REFIMP) and Analog Bias ....57
6.11.6 Power Saving ....57
6.11.7 Estimated Supply Currents ....58
6.12 Register Description ....59
6.13 Software Reset ....61
6.14 Power Management Registers ....61
6.14.1 Power Management 1 ....61
6.14.2 Power Management 2 ....62
6.14.3 Power Management 3 ....62
6.15 Audio Control Registers ....62
6.15.1 Audio Interface Control ....62
6.15.2 Audio Interface Companding Control ....63
6.15.3 Clock Control Register ....64
6.15.4 Audio Sample Rate Control Register ....65
6.15.5 DAC Control Register ....65
6.15.6 DAC Gain Control Register ....66
6.15.7 ADC Control Register ....66
6.15.8 ADC Gain Control Register ....67
6.16 5-Band Equalizer Control Registers ....68
6.17 Digital To Analog Converter (DAC) Limiter Registers ....69
6.18 Notch Filter Registers ....70
6.19 Automatic Level Control Register ....71
6.19.1 ALC1 Register ....71
6.19.2 ALC3 Register ....71
6.20 Noise Gain Control Register ....73
6.21 Phase Lock Loop (PLL) Registers ....74
6.21.1 PLL Control Registers ....74
6.21.2 Phase Lock Loop Control (PLL) Registers ....74
6.22 Input, Output, And Mixers Control Register ....75

6.22.1 Attenuation Control Register ....75
6.22.2 Input Signal Control Register ....75
6.22.3 PGA Gain Control Register ....76
6.22.4 ADC Boost Control Registers ....77
6.22.5 Output Register ....77
6.22.6 Speaker Mixer Control Register ....78
6.22.7 Speaker Gain Control Register ....78
6.22.8 MONO Mixer Control Register ....79
6.22.9 Power Management 4 ....79
6.23 PCM Time Slot Control & ADCOUT Impedance Option Control ....80
6.23.1 PCM1 Timeslot Control Register ....80
6.23.2 PCM2 Timeslot Control Register ....80
6.24 Register ID ....81
6.24.1 Device revision register ....81
6.24.2 2-WIRE ID Register ....81
6.24.3 Additional ID ....81
6.24.4 Reserved ....81
6.25 OUTPUT Driver Control Register ....82
6.26 Automatic Level Control Enhanced Register ....83
6.26.1 ALC1 Enhanced Register ....83
6.26.2 ALC Enhanced 2 Register ....83
6.27 Misc Control Register ....84
6.28 Output Tie-Off Register ....85
6.29 AGC Peak-To-Peak Out Register ....85
6.30 AGC Peak Out Register ....85
6.31 Auto-mute Control and Status Register ....86
6.32 Output Tie-Off Direct Manual Control Register ....86
6.33 Control Interface Timing Diagram ....87
6.33.1 2-Wire Timing Diagram ....87
6.34 Audio Interface Timing Diagram ....88
6.34.1 Audio Interface In Slave Mode ....88
6.34.2 Audio Interface In Master Mode ....88
6.34.3 PCM Audio Interface In Slave Mode (PCM Audio Data) ....89
6.34.4 PCM Audio Interface In Master Mode (PCM Audio Data) ....89
6.34.5 PCM Audio Interface In Slave Mode (PCM Time Slot Mode) ....90
6.34.6 PCM Audio Interface In Master Mode (PCM Time Slot Mode) ....90
6.34.7 System Clock (MCLK) Timing Diagram ....91
6.34.8 μ-Law Encoding & Decoding Characteristics ....92
6.34.9 A-Law Encoding & Decoding Characteristics ....93
6.34.10 μ-Law / A-Law Codes For Zero And Full Scale ....94
6.34.11 μ-Law / A-Law Output Codes (Digital MW) ....94
6.35 Digital Filter Characteristics ....95
7. APPLICATION CIRCUIT ....97
8. PACKAGE DIMENSION ....98
9. ORDERING INFORMATION ....99
10. REVISION HISTORY ....100
IMPORTANT NOTICE ....101

## LIST OF FIGURES

Figure 1: 20-Pin QFN Package ....10
Figure 2: NAU88C10 Function Block Diagram ....12
Figure 3: NAU88C10 General Block Diagram ....13
Figure 4: Input PGA Circuit Block Diagram ....19
Figure 5: Boost Stage Block Diagram ....21
Figure 6: Microphone Bias Schematic ....22
Figure 7: ADC Digital Filter Path Block Diagram ....23
Figure 8: ALC Block Diagram ....26
Figure 9: ALC Response Graph ....27
Figure 10: ALC Normal Mode Operation ....29
Figure 11: ALC Hold Time ....30
Figure 12: ALC Limiter Mode Operations ....30
Figure 13: ALC Operation with Noise Gate disabled ....31
Figure 14: ALC Operation with Noise Gate Enabled ....32
Figure 15: DAC Digital Filter Path ....33
Figure 16: DAC Digital Limiter Control ....35
Figure 17: Speaker and MONO Analogue Outputs [To Update ? output from Auxilliary Amplifier] ....37
Figure 18: Tie-off Options for the Speaker and MONO output Pins ....40
Figure 19: PLL and Clock Select Circuit ....42
Figure 20: Valid START Condition ....46
Figure 21: Valid Acknowledge ....46
Figure 22: Valid STOP Condition ....46
Figure 23: Slave Address Byte, Control Address Byte, and Data Byte ....47
Figure 24: Byte Write Sequence ....47
Figure 25: 2-Wire Read Sequence ....48
Figure 26: Right Justified Audio Interface (Normal Mode) ....49
Figure 27: Right Justified Audio Interface (Special mode) ....50
Figure 28: Left Justified Audio Interface (Normal Mode) ....50
Figure 29: Left Justified Audio Interface (Special mode) ....51
Figure 30: I2S Audio Interface (Normal Mode) ....51
Figure 31: I2S Audio Interface (Special mode) ....52
Figure 32: PCM Mode Audio Interface (Normal Mode) ....52
Figure 33: PCM Mode Audio Interface (Special mode) ....53
Figure 34: PCM Time Slot Mode (Time slot = 0) (Normal Mode) ....53
Figure 35: PCM Time Slot Mode (Time slot = 0) (Special mode) ....54
Figure 36: The Programmable ADCOUT Pin ....80
Figure 37: 2-Wire Timing Diagram ....87

Figure 38: Audio Interface Slave Mode Timing Diagram ..... 88
Figure 39: Audio Interface in Master Mode Timing Diagram ..... 88
Figure 40: PCM Audio Interface Slave Mode Timing Diagram ..... 89
Figure 41: PCM Audio Interface Slave Mode Timing Diagram ..... 89
Figure 42: PCM Audio Interface Slave Mode (PCM Time Slot Mode )Timing Diagram ..... 90
Figure 43: PCM Audio Interface Master Mode (PCM Time Slot Mode )Timing Diagram ..... 90
Figure 44: MCLK Timing Diagram ..... 91
Figure 45: DAC Filter Frequency Response ..... 96
Figure 46: ADC Filter Frequency Response ..... 96
Figure 47: DAC Filter Ripple ..... 96
Figure 48: ADC Filter Ripple ..... 96
Figure 49: Application Diagram For 20-Pin QFN ..... 97

## LIST OF TABLES

Table 1: Pin Description ....11
Table 2: Register associated with Input PGA Control ....19
Table 3: Microphone Non-Inverting Input Impedances....20
Table 4: Microphone Inverting Input Impedances ....20
Table 5: Registers associated with ALC and Input PGA Gain Control ....21
Table 6: Registers associated with PGA Boost Stage Control ....22
Table 7: Register associated with Microphone Bias....23
Table 8: Microphone Bias Voltage Control....23
Table 9: Register associated with ADC....24
Table 10: High Pass Filter Cut-off Frequencies (HPFAM=1)....24
Table 11: Registers associated with Notch Filter Function....25
Table 12: Equations to Calculate Notch Filter Coefficients ....25
Table 13: Register associated with ADC Gain ....25
Table 14: Registers associated with ALC Control ....28
Table 15: ALC Maximum and Minimum Gain Values....28
Table 16: Registers associated with DAC Gain Control ....33
Table 17: Registers associated with Equalizer Control ....36
Table 18: Speaker Output Controls....38
Table 19: MONO Output Controls....39
Table 20: General Purpose Control....42
Table 21: Registers associated with PLL ....43
Table 22: Registers associated with PLL ....44
Table 23: PLL Frequency Examples ....45
Table 24: Standard Interface modes ....49
Table 25: Audio Interface Control Registers ....49
Table 26: Companding Control ....54
Table 27: Power up sequence....57
Table 28: Power down Sequence ....57
Table 29: Registers associated with Power Saving....58
Table 30: VDDA 3.3V Supply Current....58
Table 31: 2-WireTiming Parameters ....87
Table 32: Audio Interface Timing Parameters....91
Table 33: MCLK Timing Parameter....91

# 1. FEATURE

**24-bit signal processing linear Mono Audio CODEC**

- Audio DAC: 93dB SNR and -84dB THD
- Audio ADC: 91dB SNR and -79dB THD
- Support variable sample rates from 8 - 48kHz

**Analog I/O**

- Integrated programmable Microphone Amplifier
- Integrated BTL Speaker Driver 1 W (8Ω / 5V)
- Earphone / Speaker / Line-Output Mixing / Routing
- Integrated Headset Driver 40mW (16Ω / 3.3V)
- Low Noise bias supply voltage for microphone
- On-chip full fractional-N PLL

**Interfaces**

- $I^2S$ digital interface PCM time slot assignment
- 2-Wire serial control Interface ($I^2C$ style; /Write capable)

**Low Power, Low Voltage**

- Analog Supply: 2.5V ~ 3.6V
- Digital Supply: 1.71V ~ 3.6V
- Nominal Operating Voltage: 3.3V

**Additional features**

- 5-band Graphic Equalizer
- Programmable ALC
- ADC Notch Filter
- Programmable High Pass Filter
- Digital ADC/DAC bypass path
- Mono data output on both channels
- QFN-20 package
- Package is Halogen-free, RoHS-compliant and TSCA-compliant

**Applications**

- All types of wired/wireless telephony
- Security Systems
- Mobile Telephone Hands-free Kits
- Residential & Consumer Intercoms

# 2. GENERAL DESCRIPTION

The NAU88C10 is a cost effective low power wideband Monophonic audio CODEC. It is suitable for a wide range of audio applications, including voice telephony. Supported functions include a 5-band Graphic Equalizer, Automatic Level Control (ALC) with noise gate, PGA, standard I2S or PCM audio interface, optional PCM time slot assignment, and a full Fractional-N on-chip PLL. This device includes one differential microphone input, and multiple variable gain control stages in the audio paths. Both a Mono headset/line-level output and a high power differential BTL speaker driver output is provided.

NAU88C10 operates at supply voltages from 2.5V ~ 3.6V and the digital core can operate at a voltage as low as 1.71V to conserve power. The analog input path includes a PGA enabling dynamic range optimization of a wide range of input sources with programmable gain from -12dB to +35.25dB. In addition to a digital high pass filter to remove DC offset voltages, the ADC also features programmable voice band digital filtering. Audio data is communicated via the audio interface that supports multiple I2S and PCM data formats. The DAC converter path includes filtering, mixing, programmable-gain amplifiers, and soft muting. The 2-Wire digital control interface has an independent supply voltage to enable easy integration into multiple supply voltage systems.

NAU88C10 is specified for operation from -40℃ ~ +85℃ with QFN-20 package.

# 3. PART INFORMATION

## PIN DIAGRAM

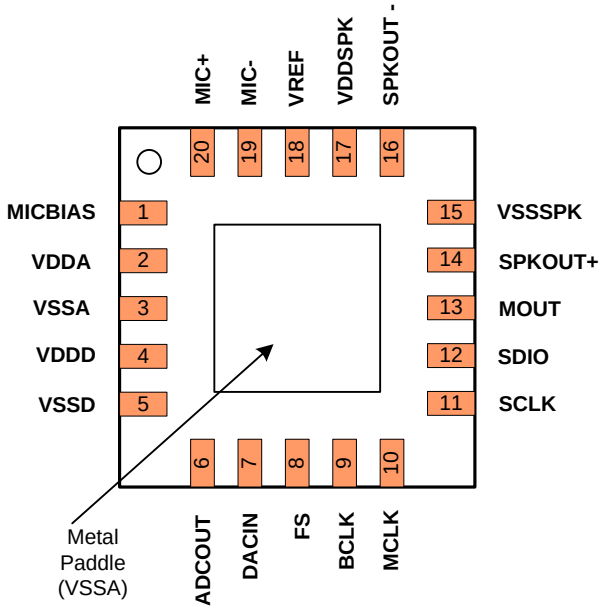


Figure 1: 20-Pin QFN Package

## PIN DESCRIPTION

| Pin Name | 24-Pin | Functionality | A/D | Pin Type |
|---|---|---|---|---|
| MICBIAS | 1 | Microphone Bias | A | O |
| VDDA | 2 | Analog Supply | A | I |
| VSSA | 3 | Analog Ground | A | O |
| VDDD | 4 | Digital Supply | D | I |
| VSSD | 5 | Digital Ground | D | O |
| ADCOUT | 6 | Digital Audio Data Output | D | O |
| DACIN | 7 | Digital Audio Data Input | D | I |
| FS | 8 | Frame Sync | D | I/O |
| BCLK | 9 | Bit Clock | D | I/O |
| MCLK | 10 | Master Clock | D | I |
| SCLK | 11 | 2-Wire Serial Clock | D | I |
| SDIO | 12 | 2-Wire I/O | D | O |
| MOUT | 13 | MONO Output | A | O |
| SPKOUT+ | 14 | Speaker Positive Output | A | O |
| VSSSPK | 15 | Speaker Ground | A | O |
| SPKOUT- | 16 | Speaker Negative Output | A | O |
| VDDSPK | 17 | Speaker Supply | A | I |
| VREF | 18 | Decoupling internal analog mid supply reference | A | O |
| MIC- | 19 | Microphone Negative Input | A | I |
| MIC+ | 20 | Microphone Positive Input | A | I |

Table 1: Pin Description

Notes

1. The 20-QFN package includes a bulk ground connection pad on the underside of the chip. This bulk ground should be thermally tied to the PCB, and electrically tied to the analog ground.
2. Unused analog input pins should be left as no-connection.
3. Any unused digital input pin must be tied high or low as appropriate.

# 4. BLOCK DIAGRAM

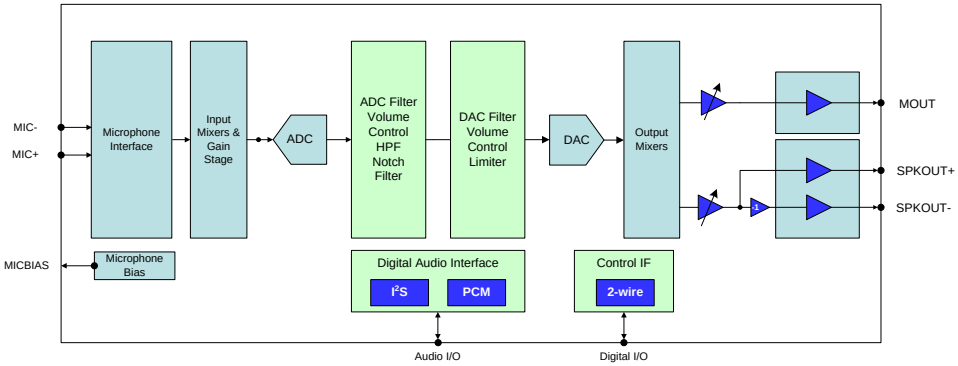


Figure 2: NAU88C10 Function Block Diagram

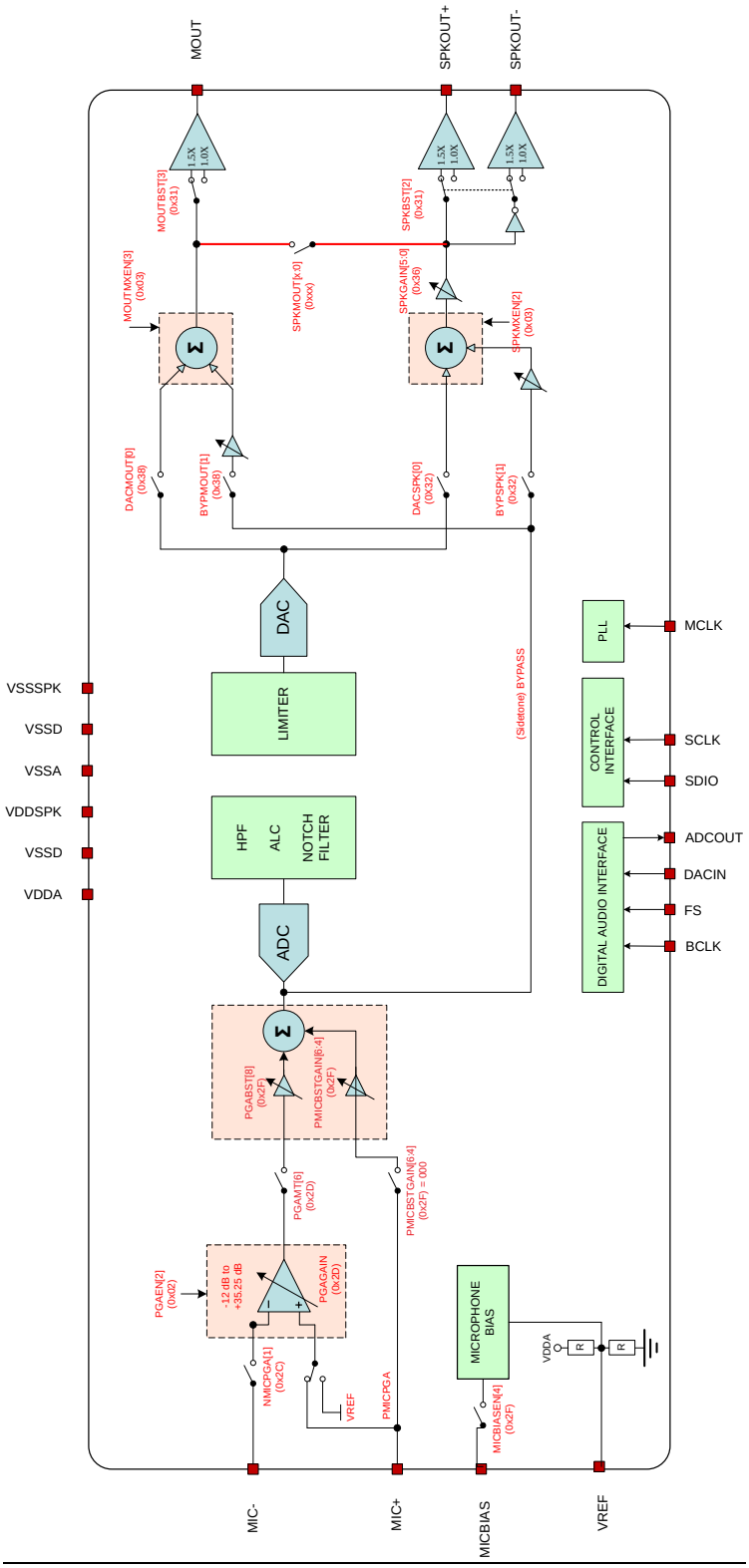


Figure 3: NAU88C10 General Block Diagram

# 5. ELECTRICAL CHARACTERISTICS

## 5.1 Absolute Maximum Ratings

| CONDITION | MIN | MAX | Units |
|---|---|---|---|
| VDDD, VDDA supply voltages | -0.3 | +3.63 | V |
| VDDSPK supply voltage (MOUTBST=0, SPKBST=0) | -0.3 | +3.63 | V |
| VDDSPK supply voltage (MOUTBST=1, SPKBST=1) | -0.3 | +5.50 | V |
| Core Digital Input Voltage range | VSSD – 0.3 | VDDD + 0.30 | V |
| Analog Input Voltage range | VSSA – 0.3 | VDDA + 0.30 | V |
| Industrial operating temperature $T_A$ | -40 | +85 | $^0$C |
| Junction Temperature $T_J$ | -40 | +150 | $^0$C |
| Storage temperature range | -65 | +150 | $^0$C |

*CAUTION: Do not operate at or near the maximum ratings listed for extended period of time. Exposure to such conditions may adversely influence product reliability and result in failures not covered by warranty. These devices are sensitive to electrostatic discharge; follow proper IC Handling Procedures.*

## 5.2 Operating Conditions

| CONDITION | SYMBOL | MIN | TYPICAL | MAX | UNITS |
|---|---|---|---|---|---|
| Analogue supplies range | VDDA | 2.50[1] | | 3.60 | V |
| Digital supply range | VDDD | 1.71 | | 3.60 | V |
| Speaker supply (MOUTBST=0, SPKBST=0) | VDDSPK | 2.50 | | 3.60 | V |
| Speaker supply (MOUTBST=1, SPKBST=1) | VDDSPK | 2.50 | | 5.50 | V |
| Ground | VSSD, VSSA, VSSSPK | | 0 | | V |

**Note 1. VDDA must be ≥ VDDD.**

## 5.3 Electrical Parameters

VDDD = 1.8V, VDDA = VDDSPK = 3.3V (VDDSPK = 1.5*VDDA when Boost), $T_A$ = +25ºC, 1kHz signal, fs = 48kHz, 24-bit audio data unless otherwise stated.

| PARAMETER | SYMBOL | TEST CONDITIONS | MIN | TYP | MAX | UNIT |
|---|---|---|---|---|---|---|
| **Analogue to Digital Converter (ADC)** | | | | | | |
| Full scale input signal [1] | $V_{INFS}$ | PGABST = 0dB<br>PGAGAIN = 0dB | | 1.0<br>0 | | $V_{RMS}$<br>dBV |
| Signal to Noise Ratio [2] | SNR | Gain = 0dB, A-weighted | 87 | 91 | | dB |
| Total Harmonic Distortion [3] | THD | Input = -1dBFS, Gain = 0dB | | -79 | -65 | dB |
| **Digital to Analogue Converter (DAC) to MONO output** (all data measured with 10kΩ / 50pF load) | | | | | | |
| Full Scale output signal [1] | | MOUTBST=0 | | 1.0x ($V_{REF}$) | | $V_{RMS}$ |
| | | MOUTBST=1 | | 1.5 x $V_{REF}$ | | |
| Signal to Noise Ratio [2] | SNR | A-weighted (ADC/DAC oversampling rate of 128) | 90 | 93 | | dB |
| Total Harmonic Distortion [3] | THD | $R_L$ = 10 KΩ; -1.0dBfs | | -84 | -70 | dB |
| **Microphone Inputs (MICN & MICP) and MIC Input Programmable Gain Amplifier (PGA)** | | | | | | |
| Full-scale Input Signal Level [1] | $V_{INFS}$ | PGABST = 0dB<br>PGAGAIN = 0dB | | 1<br>0 | | $V_{RMS}$<br>dBV |
| Programmable input PGA gain | | | -12 | | 35.25 | dB |
| Programmable Gain Step Size | | Guaranteed monotonic | | 0.75 | | dB |
| Programmable Boost PGA gain | | PGABST = 0 | | 0 | | dB |
| | | PGABST = 1 | | 20 | | |
| Mute Attenuation | | | | 100 | | dB |
| PGA equivalent output noise | | 0 to 20kHz,<br>Gain set to 35.25dB | | 110 | | µV |
| Auxiliary Input resistance | $R_{AUX}$ | PGA Gain = 35.25dB | | 1.6 | | kΩ |
| | | PGA Gain = 0dB | | 47 | | kΩ |
| | | PGA Gain = -12dB | | 75 | | kΩ |
| Positive Microphone Input resistance | $R_{MIC+}$ | PMICPGA = 1 | | 94 | | kΩ |
| Input Capacitance | $C_{MIC}$ | | | 10 | | pF |
| **Speaker Output PGA** | | | | | | |
| Programmable Gain | | | -57 | | 6 | dB |
| Programmable Gain Step Size | | Guaranteed monotonic | | 1 | | dB |

VDDD = 1.8V, VDDA = VDDSPK = 3.3V (VDDSPK = 1.5*VDDA when Boost), $T_A$ = +25ºC, 1kHz signal, fs = 48kHz, 24-bit audio data unless otherwise stated.

| PARAMETER | SYMBOL | TEST CONDITIONS | | | MIN | TYP | MAX | UNIT |
|---|---|---|---|---|---|---|---|---|
| **BTL Speaker Output (SPKOUT+, SPKOUT- with 8Ω bridge tied load)** | | | | | | | | |
| Full scale output [7] | | SPKBST = 0<br>VDDSPK = VDDA | | | | VDDA / 3.3 | | $V_{RMS}$ |
| | | SPKBST = 1<br>VDDSPK = 1.5 * VDDA | | | | (VDDA / 3.3) * 1.5 | | |
| Output Power | PO | Output power is very closely correlated with THD; see below | | | | | | |
| Signal to Noise Ratio | SNR | VDDSPK = 3.3V<br>RL = 8Ω | | | | 90 | | dB |
| | | VDDSPK = 1.5*VDDA<br>RL = 8Ω | | | | 90 | | dB |
| Total Harmonic Distortion | THD | PO =180mW | RL = 8Ω | VDDSPK=3.3V | | -63 | | dB |
| | | PO =400mW | | | | -56 | | dB |
| | | PO =360mW | | VDDSPK = 1.5*VDDA | | -60 | | dB |
| | | PO =800mW | | | | -61 | | dB |
| | | PO =1W | | | | -34 | | dB |
| Power Supply Rejection Ratio (50Hz - 22kHz) | PSRR | VDDSPK = 3V, SPKBST = 0 | | | | 50 | | dB |
| | | VDDSPK = 1.5*VDDA, SPKBST = 1 | | | | 50 | | dB |
| **Headphone' output (SPKOUTP, SPKOUTN with resistive load to ground)** | | | | | | | | |
| Full scale output [7] | | | | | | VDDA / 3.3 | | $V_{RMS}$ |
| Signal to Noise Ratio | SNR | A-weighted | | | | 90 | | dB |
| Total Harmonic Distortion | THD | Po = 20mW | RL=16 Ω | VDDSPK=3.3V | | -84 | | dB |
| | | Po = 20mW | RL=32 Ω | | | -85 | | dB |
| **Microphone Bias** | | | | | | | | |
| Bias Voltage | $V_{MICBIAS}$ | (MICBIASV = 0) | | | | 0.9* VDDA | | V |
| | | (MICBIASV = 1) | | | | 0.65* VDDA | | V |
| Bias Current Source | $I_{MICBIAS}$ | | | | | 3 | | mA |
| Output Noise Voltage | $V_N$ | MICBIASM = 0<br>(1kHz to 20kHz) | | | | 14 | | nV/√Hz |
| | | MICBIASM = 1<br>(1kHz to 20kHz) | | | | 4 | | nV/√Hz |
| **Automatic Level Control (ALC)/Limiter – ADC only** | | | | | | | | |
| Target Record Level | | | | | -28.5 | | -6 | dB |
| Programmable Gain | | | | | -12 | | 35.25 | dB |
| Programmable Gain Step Size | | Guaranteed Monotonic | | | | 0.75 | | dB |
| Gain Hold Time [4, 6] | $t_{HOLD}$ | MCLK=12.288MHz | | | | 0 / 2.67 / …/ 43691 (time doubles with each step) | | ms |

VDDD = 1.8V, VDDA = VDDSPK = 3.3V (VDDSPK = 1.5*VDDA when Boost), $T_A$ = +25ºC, 1kHz signal, fs = 48kHz, 24-bit audio data unless otherwise stated.

| PARAMETER | SYMBOL | TEST CONDITIONS | MIN | TYP | MAX | UNIT |
|---|---|---|---|---|---|---|
| **Automatic Level Control (ALC)/Limiter – ADC only** | | | | | | |
| Gain Ramp-Up (Decay) Time [5, 6] | $t_{DCY}$ | ALC Mode<br>ALCM=0<br>MCLK=12.288MHz | 3.3 / 6.6 / 13.1 / … / 3360 (time doubles every step) | | | ms |
| | | Limiter Mode<br>ALCM=1<br>MCLK=12.288MHz | 0.73 / 1.45 / 2.91 / … / 744 (time doubles every step) | | | ms |
| Gain Ramp-Down (Attack) Time [5, 6] | $t_{ATK}$ | ALC Mode<br>ALCM=0<br>MCLK=12.288MHz | 0.83 / 1.66 / 3.33 / … / 852 (time doubles every step) | | | ms |
| | | Limiter Mode<br>ALCM=1<br>MCLK=12.288MHz | 0.18 / 0.36 / 0.73 / … / 186 (time doubles every step) | | | ms |
| **Digital Input / Output** | | | | | | |
| Input HIGH Level | $V_{IH}$ | | 0.7 × VDDD | | | V |
| Input LOW Level | $V_{IL}$ | | | | 0.3 × VDDD | V |
| Output HIGH Level | $V_{OH}$ | $I_{OL}$ = 1mA | 0.9 × VDDD | | | V |
| Output LOW Level | $V_{OL}$ | $I_{OH}$ = -1mA | | | 0.1 x VDDD | V |

**Notes**

1. Full Scale is relative to VDDA (FS = VDDA/3.3.).
2. Signal-to-noise ratio (dB) - SNR is a measure of the difference in level between the full-scale output and the output with no signal applied. (No Auto-zero or Automute function is employed in achieving these results).
3. THD+N (dB) - THD+N are a ratio, of the RMS values, of (Noise + Distortion)/Signal.
4. Hold Time is the length of time between a signal detected being too quiet and beginning to ramp up the gain. It does not apply to ramping down the gain when the signal is too loud, which happens without a delay.
5. Ramp-up and Ramp-Down times are defined as the time to change the PGA gain by 6dB of its gain range.
6. All hold, ramp-up and ramp-down times scale proportionally with MCLK (specified for MCLK = 12.288MHz)
7. The maximum output voltage can be limited by the speaker power supply. If MOUTBST or SPKBST is, set then VDDSPK should be 1.5xVDDA to prevent clipping taking place in the output stage (when PGA gains are set to 0dB).

# 6. FUNCTIONAL DESCRIPTION

The NAU88C10 is a Mono Audio CODEC with very robust ADC and DAC capabilities. The device provides one differential microphone input pair (MIC- & MIC+ pins) supported by a two-stage amplification path for amplification by as much as 55.25dB. Additionally, the MIC+ pin can be used independently from the MIC- pin enabling two independent mixing inputs for some applications.

The device also has an internal configurable biasing circuit for biasing the microphone, which reduces external components. The PGA output has programmable ADC gain. An advanced Sigma Delta ADC and DAC are used along with digital decimation and interpolation filters to give high quality audio at sample rates from 8 KHz to 48 KHz. The Digital Filter blocks include ADC high pass filters, a Notch Filter, and a 5-band equalizer. The device has two output mixers, one for the Mono output, and the other for the speaker output.

The NAU88C10 has a 2-Wire read/write serial control interface for device control. Audio data is supported in many commonly used industry formats as either $I^2S$ or PCM formatted data. Additionally, the PCM mode supports time slotting for added design flexibility, such as in creation of multichannel systems using a shared audio data bus.

The NAU88C10 can operate as a master or slave audio device. It can operate with sample rates ranging from 8 kHz to 48 kHz, depending on the values of MCLK and its pre-scaler. The NAU88C10 includes a PLL block, where it takes the external clock (MCLK pin) to generate other clocks for the audio data transfer such as Bit clock (BCLK), Frame Sync (FS), and $I^2S$ clocks. The power control registers help save power by controlling the major individual functional blocks of the NAU88C10.

## 6.1 Input Path

The NAU88C10 microphone inputs are maintained at a DC bias at approximately a half of the VDDA supply voltage. Connections to these inputs should be AC-coupled by means of DC blocking capacitors suitable for the device application.

### 6.1.1 The differential microphone input (MIC- & MIC+ pins)

The NAU88C10 features a low-noise, high common mode rejection ratio (CMRR), differential microphone inputs (MIC- & MIC+ pins) which are connected to a PGA Gain stage. The differential input structure is essential in noisy digital systems where amplification of low-amplitude analog signals is required in products such as notebooks and PDAs. When properly employed, the differential input architecture offers an improved power-supply rejection ratio (PSRR) and higher ground noise immunity.

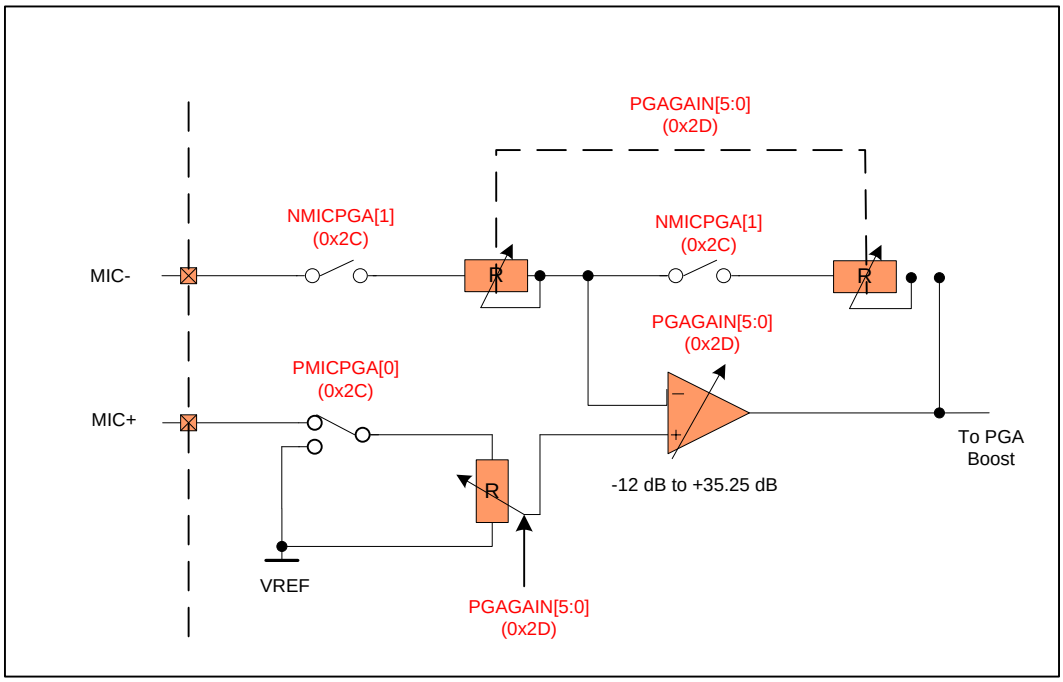


Figure 4: Input PGA Circuit Block Diagram

| Bit(s) | Addr | Parameter | Programmable Range |
|---|---|---|---|
| PMICPGA[0] | 0x2C | Positive Microphone to PGA | 0 = Input PGA Positive terminal to VREF<br>1 = Input PGA Positive terminal to MICP |
| NMICPGA[1] | 0x2C | Negative Microphone to PGA | 0 = MICN not connected to input PGA<br>1 = MICN to input PGA Negative terminal. |

Table 2: Register associated with Input PGA Control

#### 6.1.1.1 Positive Microphone Input (MIC+)

The positive microphone input (MIC+) can be used as part of the differential input. It connects to the positive terminal of the PGA gain amplifier by setting PMICPGA[0] address (0x2C) to HIGH or can be connected to VREF by setting PMICPGA[0] address (0x2C) to LOW.

In single ended applications where the MIC+ input is used without using MIC-, the PGA gain values will be valid only if the MIC- pin is terminated to a low impedance signal point. This termination should normally be an AC coupled path to signal ground. The non-inverting input impedance is constant regardless of the gain value. The following table gives the nominal input impedance for both inputs. Impedance for specific gain values not listed in this table can be estimated through interpolation between listed values.

| MIC+ to non-inverting PGA input **Nominal Input Impedance** | |
|---|---|
| **Gain (dB)** | **Impedance (kΩ)** |
| -12 | 94 |
| -9 | 94 |
| -6 | 94 |
| -3 | 94 |
| 0 | 94 |
| 3 | 94 |
| 6 | 94 |
| 9 | 94 |
| 12 | 94 |
| 18 | 94 |
| 30 | 94 |
| 35.25 | 94 |

Table 3: Microphone Non-Inverting Input Impedances

| MIC- to inverting PGA input **Nominal Input Impedance** | |
|---|---|
| **Gain (dB)** | **Impedance (kΩ)** |
| -12 | 75 |
| -9 | 69 |
| -6 | 63 |
| -3 | 55 |
| 0 | 47 |
| 3 | 39 |
| 6 | 31 |
| 9 | 25 |
| 12 | 19 |
| 18 | 11 |
| 30 | 2.9 |
| 35.25 | 1.6 |

Table 4: Microphone Inverting Input Impedances

#### 6.1.1.2 Negative Microphone Input (MIC-)

The negative microphone input (MIC-) may be used as either a differential input in conjuction with MIC+, or as a single ended intput. This input connects to the negative terminal of the PGA gain amplifier by setting NMICPGA[1] address (0x2C) to HIGH. When the MIC- is used as a single ended input, MIC+ should be connected to VREF by setting PMICPGA[0] address (0x2C) bit to LOW, or MIC+ may be used as an independent input.

When the associated control bit NMICPGA[1] address 0X2C is set to logic = 0, the MIC- pin is connected to a resistor of approximately 30kΩ which is tied to VREF. The purpose of the tie to VREF is to reduce any pop or click sound by keeping the DC level of the MIC- pin close to VREF at all times. It is important for a system designer to know that the MIC-input impedance varies as a function of the selected PGA gain. This is normal and expected for a difference amplifier type topology. The above table gives the nominal resistive impedance values for this input over the possible gain range. Impedance for specific gain values not listed in this table can be estimated through interpolation between listed values.

#### 6.1.1.3 PGA Gain Control

The PGA amplification is common to both microphone input pins MIC-, MIC+, and enabled by PGAEN[2] address (0x02). It has a range of -12dB to +35.25dB in 0.75dB steps, controlled by PGAGAIN[5:0] address (0x2D). Input PGA gain will not be used when ALC is enabled using ALCEN[8] address (0x20).

| Addr | Bit 8 | Bit 7 | Bit 6 | Bit5 | Bit 4 | Bit 3 | Bit 2 | Bit 1 | Bit 0 | Default |
|---|---|---|---|---|---|---|---|---|---|---|
| 0x2D | 0 | PGAZC | PGAMT | PGAGAIN[5:0] | | | | | | 0x010 |
| 0x20 | ALCEN | 0 | 0 | ALCMXGAIN[2:0] | | | ALCMNGAIN[2:0] | | | 0x038 |

Table 5: Registers associated with ALC and Input PGA Gain Control

### 6.1.2 PGA Boost / Mixer Stage

The boost stage has two inputs connected to the PGA Boost Mixer. Both inputs can be individually connected or disconnected from the PGA Boost Mixer. The boost stage can be enabled by setting BSTEN[4] address (0x02) to HIGH. The following figure shows the PGA Boost stage.

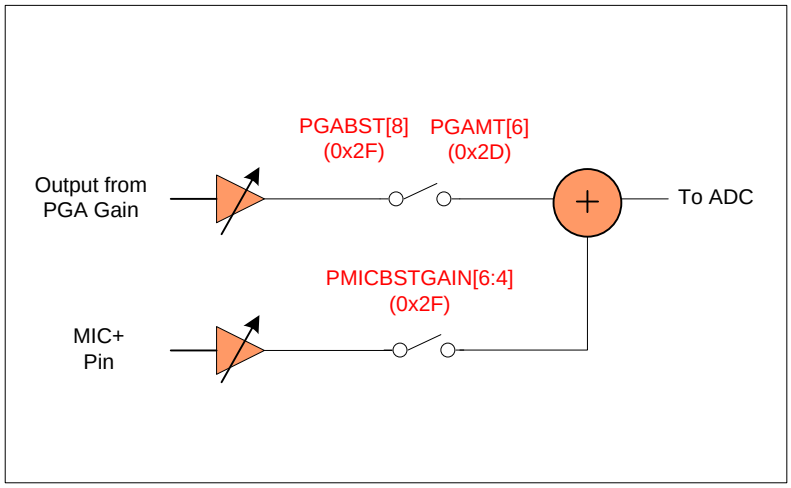


Figure 5: Boost Stage Block Diagram

The signal from the PGA stage to the PGA Boost Mixer is disconnected or muted by setting PGAMT[6] address (0x2D) to HIGH. In this path, the PGA boost can be a fixed value of +20dB or 0dB, controlled by the PGABST[8] address (0x2F) bit.

The signal from MIC+ pin to the PGA Boost Mixer is disconnected by setting '000' binary value to PMICBSTGAIN[6:4] address (0x2F) and any other combination connects the path.

| Bit(s) | Addr | Parameter | Programmable Range |
|---|---|---|---|
| BSTEN[4] | 0x02 | Enable PGA Boost Block | 0 = Boost stage OFF<br>1 = Boost stage ON |
| PGAMT[6] | 0x2D | Mute control for input PGA | 0=Input PGA not muted<br>1=Input PGA muted |
| PMICBSTGAIN[6:4] | 0x2F | Boost MIC+ signal | Range: -12dB to +6dB @ 3dB increment |

| Bit(s) | Addr | Parameter | Programmable Range |
|---|---|---|---|
| PGABST[8] | 0x2F | Boost PGA stage | 0 = PGA output has +0dB<br>1 = PGA output has +20dB |

Table 6: Registers associated with PGA Boost Stage Control

## 6.2 Microphone Biasing

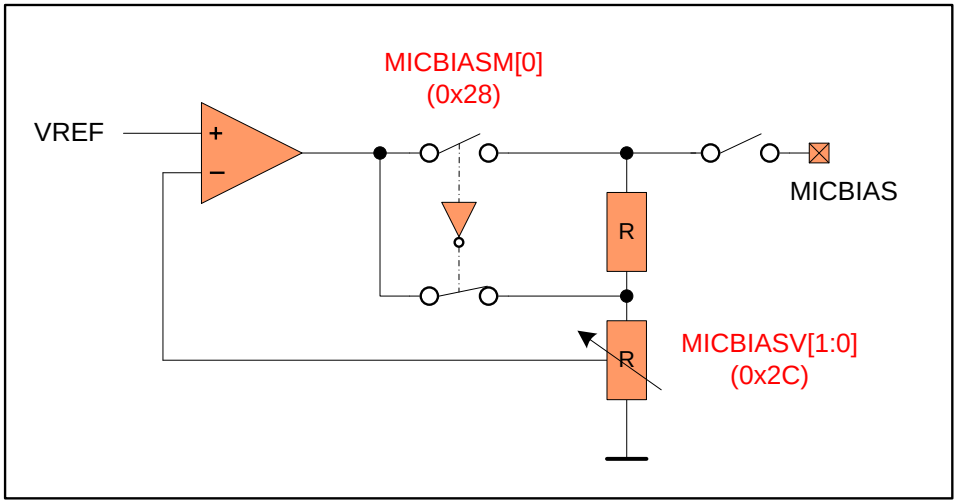


Figure 6: Microphone Bias Schematic

The MICBIAS pin is a low-noise microphone bias source for an external microphone, and it can provide a maximum of 3mA of bias current. This DC bias voltage is suitable for powering either traditional ECM (electret) type microphones, or for MEMS types microphones with an independent power supply pin. Seven different bias voltages are available for optimum system performance, depending on the specific application. The microphone bias pin normally requires an external filtering capacitor as shown on the schematic in the Application section.

The output bias can be enabled by setting MICBIASEN[4] address (0x01) to HIGH. It has various voltage values selected by a combination of bits MICBIASM[4] address (0x3A) and MICBIASV[8:7] address (0x2C).

The low-noise feature results in greatly reduced noise in the external MICBIAS voltage by placing an internal resistor of approximately 200-ohms in series with the output pin. This creates a low pass filter in conjunction with the external microphone-bias filter capacitor, but without any other additional external components.

| Bit(s) | Addr | Parameter | Programmable Range |
|---|---|---|---|
| MICBIASEN[4] | 0x01 | Microphone bias enable | 0 = Disable<br>1 = Enable |
| MICBIASM[4] | (0x3A) | Microphone bias mode selection | |
| MICBIASV[8:7] | (0x2C) | Microphone bias voltage selection | 0 = Disable<br>1 = Enable |

Table 7: Register associated with Microphone Bias

Below are the unloaded values when MICBIASM[4] is set to 1 and 0. When loaded, the series resistor will cause the voltage to drop, depending on the load current.

| Microphone Bias Voltage Control | | | |
|---|---|---|---|
| MICBIASV[8:7] | | MICBIASM[4] = 0 | MICBIASM[4]= 1 |
| 0 | 0 | 0.9* VDDA | 0.85* VDDA |
| 0 | 1 | 0.65* VDDA | 0.60* VDDA |
| 1 | 0 | 0.75* VDDA | 0.70* VDDA |
| 1 | 1 | 0.50* VDDA | 0.50* VDDA |

Table 8: Microphone Bias Voltage Control

## 6.3 ADC Digital Filter Block

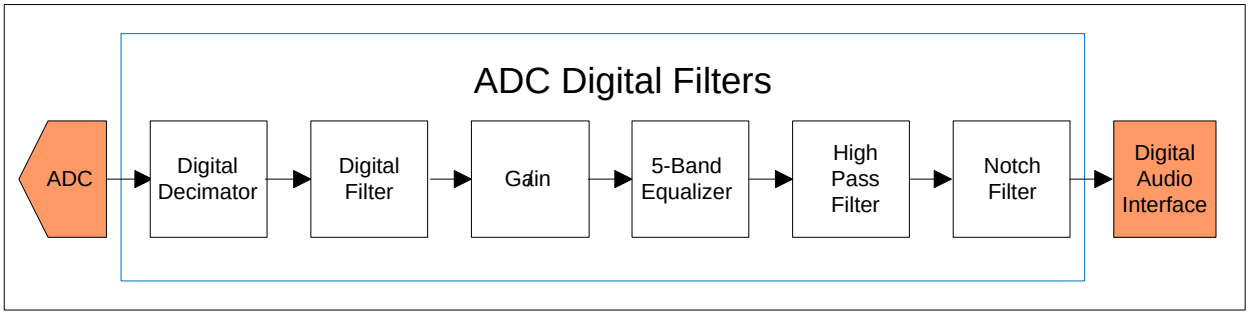


Figure 7: ADC Digital Filter Path Block Diagram

The ADC digital filter block performs a 24-bit signal processing. The block consists of an oversampled analog sigma-delta modulator, digital decimator, digital filter, 5-band graphic equalizer, high pass filter, and a notch filter. For digital decimator and 5-band graphic equalizer details, refer to “Output Signal Path”. The oversampled analog sigma-delta modulator provides a bit stream to the decimation stages and filter. The ADC coding scheme is in twos-complement format, and the full-scale input level is proportional to VDDA. With a 3.3V supply voltage, the full-scale level is $1.0V_{RMS}$ and any voltage greater than full scale may overload the ADC and cause distortion. The ADC is enabled by setting ADCEN[0] address (0x02) bit. Polarity and oversampling rate of the ADC output signal can be changed by ADCPL[0] address (0x0E) and ADCOS[3] address (0x0E) respectively.

| Bit(s) | Addr | Parameter | Programmable Range |
|---|---|---|---|
| ADCPL[0] | 0x0E | ADC Polarity | 0 = Normal<br>1 = Inverted |
| ADCOS[3] | 0x0E | ADC Over Sample Rate | 0=64x (Lowest power)<br>1=128x (best SNR at typical condition) |
| HPFEN[8] | 0x0E | High Pass Filter Enable | 0 = Disable<br>1 = Enable |
| HPFAM[7] | 0x0E | Audio or Application Mode | 0 = Audio (1st order, fc ~ 3.7 kHz)<br>1 = Application (2nd order, fc =HPF) |
| HPF[6:4] | 0x0E | High Pass Filter frequencies | 82 Hz to 612 Hz depending on the sample rate |
| ADCEN[0] | 0x02 | Enable ADC | 0 = Disable<br>1 = Enable |
| SMPLR[3:1] | 0x07 | Sample rate | 8k Hz to 48 kHz |

Table 9: Register associated with ADC

### 6.3.1 Programmable High Pass Filter (HPF)

The high pass filter (HPF) has two different operational modes set by bit HPFAM[7] at address (0x0E). In Audio Mode (HPFAM=0), the filter is first order, with a cut-off frequency of 3.7Hz. In Application mode (HPFAM=1), the filter is second order, with a cut-off frequency selectable via the HPF[2:0] register bits. Cut-off frequency of the HPF depends on sample frequency selected by SMPLR[3:1] address (0x07). The HPF is enabled by setting HPFEN[8] address (0x0E) to HIGH. Table below shows the cut-off frequencies with different sampling rates.

| HPF[2:0] | fs (kHz) | | | | | | | | |
|---|---|---|---|---|---|---|---|---|---|
| | SMPLR=101/100 | | | SMPLR=011/010 | | | SMPLR=001/000 | | |
| | 8 | 11.025 | 12 | 16 | 22.05 | 24 | 32 | 44.1 | 48 |
| 000 | 82 | 113 | 122 | 82 | 113 | 122 | 82 | 113 | 122 |
| 001 | 102 | 141 | 153 | 102 | 141 | 153 | 102 | 141 | 153 |
| 010 | 131 | 180 | 156 | 131 | 180 | 156 | 131 | 180 | 156 |
| 011 | 163 | 225 | 245 | 163 | 225 | 245 | 163 | 225 | 245 |
| 100 | 204 | 281 | 306 | 204 | 281 | 306 | 204 | 281 | 306 |
| 101 | 261 | 360 | 392 | 261 | 360 | 392 | 261 | 360 | 392 |
| 110 | 327 | 450 | 490 | 327 | 450 | 490 | 327 | 450 | 490 |
| 111 | 408 | 563 | 612 | 408 | 563 | 612 | 408 | 563 | 612 |

Table 10: High Pass Filter Cut-off Frequencies (HPFAM=1)

### 6.3.2 Programmable Notch Filter (NF)

The NAU88C10 has a programmable notch filter which passes all frequencies except those in a stop band centered on a given center frequency. The filter gives lower distortion and flattens response. The notch filter is enabled by setting NFCEN[7] address (0x1B) to HIGH. The variable center frequency is programmed by setting two's complement values to NFCA0[6:0] address (0x1C), NFCA0[13:7] address (0x1B) and NFCA1[6:0] address (0x1E), NFCA1[13:7] address (0x1D) registers. The coefficients are updated in the circuit when the NFCU[8] bit is set HIGH in a write to any of the registers NF1-NF4 address (0x1B, 0x1C, 0x1D, 0x1E).

| Addr | Bit 8 | Bit 7 | Bit 6 | Bit5 | Bit 4 | Bit 3 | Bit 2 | Bit 1 | Bit 0 | Default |
|---|---|---|---|---|---|---|---|---|---|---|
| 0x1B | NFCU | NFCEN | NFCA0[13:7] | | | | | | | 0x000 |
| 0x1C | NFCU | 0 | NFCA0[6:0] | | | | | | | 0x000 |
| 0x1D | NFCU | 0 | NFCA1[13:7] | | | | | | | 0x000 |
| 0x1E | NFCU | 0 | NFCA1[6:0] | | | | | | | 0x000 |

Table 11: Registers associated with Notch Filter Function

| | $A_0$ | $A_1$ | Notation | Register Value (DEC) |
|---|---|---|---|---|
| **Coefficient** | $\frac{1-\tan\left(\frac{2\ \pi\ f_b}{2\ f_s}\right)}{1+\tan\left(\frac{2\ \pi\ f_b}{2\ f_s}\right)}$ | $-\left(1+A_0\right)\ x\ \cos\left(\frac{2\ \pi\ f_c}{f_s}\right)$ | $f_c$ = center frequency (Hz)<br>$f_b$ = -3dB bandwidth (Hz)<br>fs = sample frequency (Hz) | NFCA0 = $-A_0 \times 2^{13}$<br>NFCA1 = $-A_1 \times 2^{12}$<br>(then convert to 2's complement) |

Table 12: Equations to Calculate Notch Filter Coefficients

### 6.3.3 Digital ADC Gain Control

The digital ADC can be muted by setting "0000 0000" to ADCGAIN[7:0] address (0x0F). Any other combination digitally attenuates the ADC output signal in the range -127dB to 0dB in 0.5dB increments].

| Addr | Name | Bit 8 | Bit 7 | Bit 6 | Bit5 | Bit 4 | Bit 3 | Bit 2 | Bit 1 | Bit 0 | Default |
|---|---|---|---|---|---|---|---|---|---|---|---|
| **0x0F** | **ADCG** | 0 | ADCGAIN | | | | | | | | **0x0FF** |

Table 13: Register associated with ADC Gain

## 6.4 Programmable Gain Amplifier (PGA)

NAU88C10 has a programmable gain amplifier (PGA) which controls the gain under program control, or automatically supporting either of these two features:

- Automatic level control (ALC) or
- Input peak limiter

The Automatic Level Control (ALC) seeks to control the PGA gain in response to the amplitude of the input signal such that the PGA output maintains a relatively constant level. The peak limiter simply prevents the output signal from exceeding a specified level.

### 6.4.1 Automatic level control (ALC)

The ALC seeks to control the PGA gain such that the PGA output maintains a constant envelope. This helps to prevent clipping at the input of the sigma delta ADC while maximizing the full dynamic range of the ADC. The ALC monitors the output of the ADC, and adjusts the PGA gain as required. The ADC output is fed into a peak detector, which updates the measured peak value whenever the absolute value of the input signal is higher than the current measured peak. The measured peak gradually decays to zero unless a new peak is detected, allowing for an accurate measurement of the signal envelope. Based on a comparison between the measured peak value and the target value, the ALC block adjusts the gain control, which is fed back to the PGA.

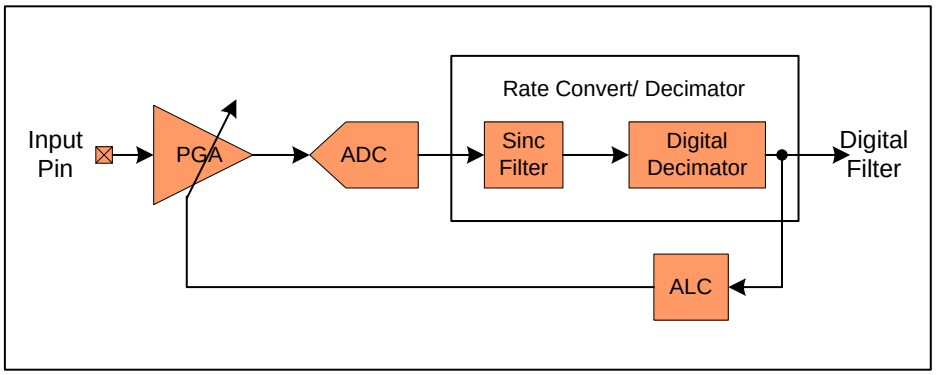


Figure 8: ALC Block Diagram

The ALC is enabled by setting ALCEN[8] address (0x20) bit to HIGH. The ALC has two functional modes, which is set by ALCM[8] address (0x22).

- Normal mode (ALCM = LOW)
- Peak Limiter mode (ALCM = HIGH)

When the ALC is disabled, the input PGA remains at the last controlled value of the ALC. An input gain update must be made by writing to the PGAGAIN[5:0] address (0x2D). A digital peak detector monitors the input signal amplitude and compares it to a register defined threshold level ALCSL[3:0] address (0x21).

| | |
|---|---|
| Blue | Original Input signal (linear line from zero to maximum) |
| Green | PGA gain value over time (inverse to signal in target range) |
| Red | Output signal (held to a constant value in target range) |

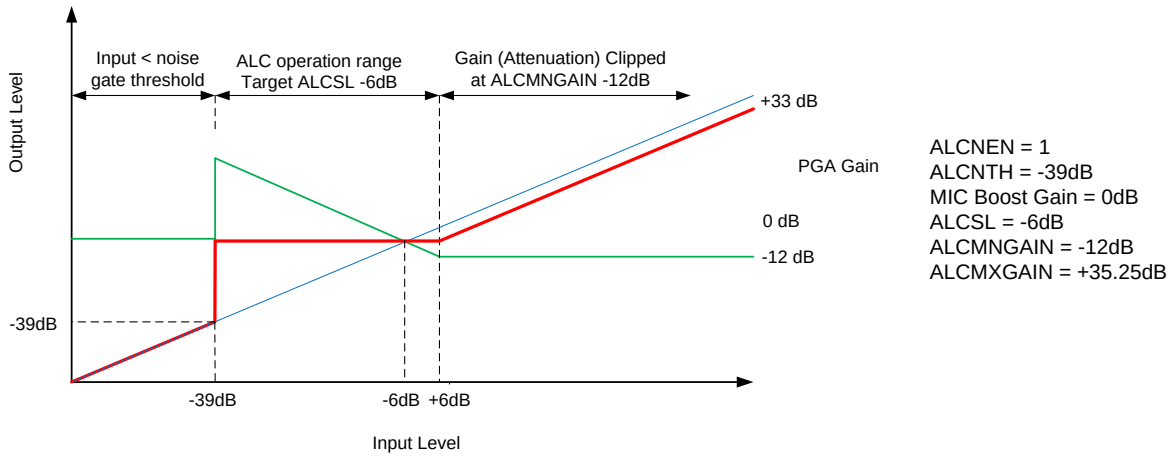


Figure 9: ALC Response Graph

The registers listed in the following section allow configuration of ALC operation with respect to:

- ALC target level
- Gain increment and decrement rates
- Minimum and maximum PGA gain values for ALC operating range
- Hold time before gain increments in response to input signal
- Inhibition of gain increment during noise inputs
- Limiter mode operation

| Bit(s) | Addr | Parameter | Programmable Range |
|---|---|---|---|
| ALCMNGAIN[2:0] | 0x20 | Minimum Gain of PGA | Range: -12dB to +30dB @ 6dB increment |
| ALCMXGAIN[2:0] | | Maximum Gain of PGA | Range: -6.75dB to +35.25dB @ 6dB increment |
| ALCEN[8] | | Enable ALC function | 0 = Disable<br>1 = Enable |
| ALCSL[3:0] | 0x21 | ALC Target | Range: -28.5dB to -6dB @ 1.5dB increment |
| ALCHT[3:0] | | ALC Hold Time | Range: 0ms to 1s, time doubles with every step) |
| ALCZC[8] | | ALC Zero Crossing | 0 = Disable<br>1 = Enable |
| ALCATK[3:0] | 0x22 | ALC Attack time | ALCM=0 - Range: 125us to 128ms<br>ALCM=1 - Range: 31us to 32ms (time doubles with every step) |
| ALCDCY[3:0] | | ALC Decay time | ALCM=0 - Range: 500us to 512ms<br>ALCM=1 - Range: 125us to 128ms<br>(Both ALC time doubles with every step) |
| ALCM[8] | | ALC Select | 0 = ALC mode<br>1 = Limiter mode |

Table 14: Registers associated with ALC Control

The operating range of the ALC is set by ALCMXGAIN[5:3] address (0x20) and ALCMNGAIN[2:0] address (0x20) bits such that the PGA gain generated by the ALC is between the programmed minimum and maximum levels. When the ALC is enabled, the PGA gain is disabled.

In Normal mode, the ALCMXGAIN bits set the maximum level for the PGA in the ALC mode but in the Limiter mode ALCMXGAIN has no effect because the maximum level is set by the initial PGA gain setting upon enabling of the ALC.

| ALCMAXGAIN | Maximum Gain (dB) |
|---|---|
| 111 | 35.25 |
| 110 | 29.25 |
| ALC Max Gain Range 35.25dB to -6dB @ 6dB increments | |
| 001 | -0.75 |
| 000 | -6.75 |

| ALCMINGAIN | Minimum Gain (dB) |
|---|---|
| 000 | -12 |
| 001 | -6 |
| ALC Min Gain Range -12dB to 30dB @ 6dB increments | |
| 110 | 24 |
| 111 | 30 |

Table 15: ALC Maximum and Minimum Gain Values

#### 6.4.1.1 Normal Mode

Normal mode is selected when ALCM[8] address (0x22) is set LOW and the ALC is enabled by setting ALCEN[8] address (0x20) HIGH. This block adjusts the PGA gain setting up and down in response to the input level. A peak detector circuit measures the envelope of the input signal and compares it to the target level set by ALCSL[3:0] address (0x21). The ALC decreases the gain when the measured envelope is greater than the target and increases the gain when the measured envelope is less than - 1.5dB. The following waveform illustrates the behavior of the ALC.

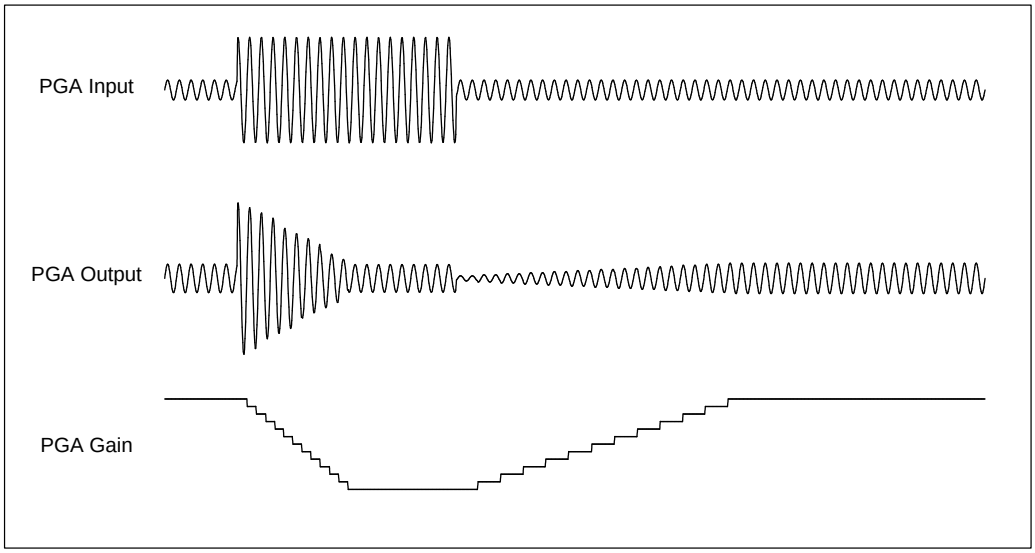


Figure 10: ALC Normal Mode Operation

#### 6.4.1.2 ALC Hold Time (Normal mode Only)

The hold parameter ALCHT[3:0] configures the time between detection of the input signal envelope being outside of the target range and the actual gain increase.

Input signals with different characteristics (e.g., voice vs. music) may require different settings for this parameter for optimal performance. Increasing the ALC hold time prevents the ALC from reacting too quickly to brief periods of silence such as those that may appear in music recordings; having a shorter hold time, on the other hand, may be useful in voice applications where a faster reaction time helps to adjust the volume setting for speakers with different volumes. The waveform below shows the operation of the ALCHT parameter.

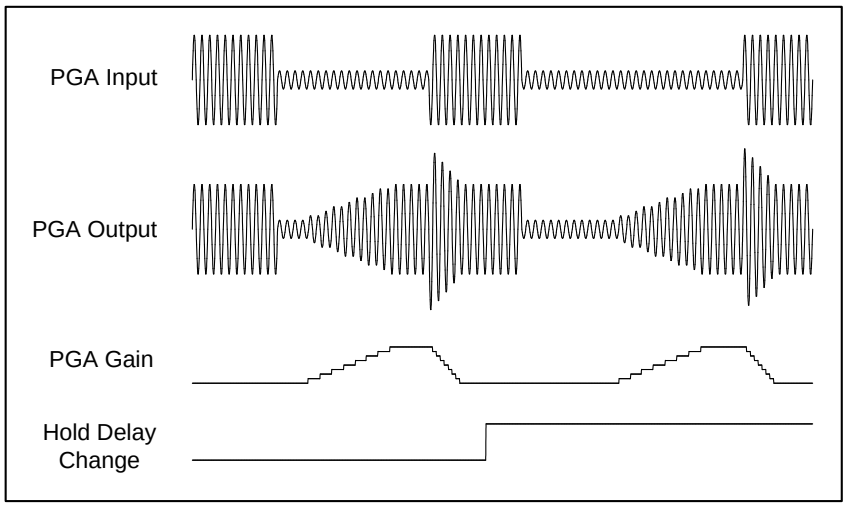


Figure 11: ALC Hold Time

### 6.4.2 Peak Limiter Mode

Peak Limiter mode is selected when ALCM[8] address (0x22) is set to HIGH and the ALC is enabled by setting ALCEN[8] address (0x20). In limiter mode, the PGA gain is constrained to be less than or equal to the gain setting at the time the limiter mode is enabled. In addition, attack and decay times are faster in limiter mode than in normal mode as indicated by the different lookup tables for these parameters for limiter mode. The following waveform illustrates the behavior of the ALC in Limiter mode in response to changes in various ALC parameters.

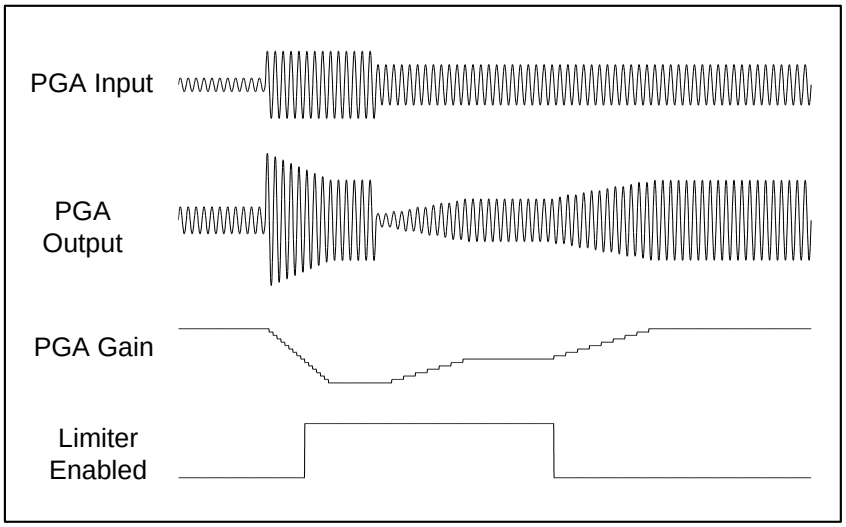


Figure 12: ALC Limiter Mode Operations

When the input signal exceeds 87.5% of full scale, the ALC block ramps down the PGA gain at the maximum attack rate (ALCATK=0000), regardless of the mode and attack rate settings until the ADC output level has been reduced below this threshold. This minimizes ADC clipping, if there is a sudden increase in the input signal level.

### 6.4.3 Attack Time

When the absolute value of the ADC output exceeds the level set by the ALC threshold, ALCSL[3:0] address (0x21), attack mode is initiated at a rate controlled by the attack rate register ALCATK[3:0] address (0x22). The peak detector in the ALC block loads the ADC output value when the absolute value of the ADC output exceeds the current measured peak; otherwise, the peak decays towards zero, until a new peak has been identified. This sequence is continuously running. If the peak is ever below the target threshold, then there is no gain decrease at the next attack timer time; if it is ever above the target-1.5dB, then there is no gain increase at the next decay timer time.

### 6.4.4 Decay Times

The decay time ALCDCY[6:4] address (0x22) is the time constant used when the gain is increasing. In limiter mode, the time constants are faster than in ALC mode.

### 6.4.5 Noise gate (normal mode only)

A noise gate may be used to limit the ALC gain when there is no input signal, or a signal less than the noise gate threshold. This noise from excess input gain, when there is no useful signal to amplify. The noise gate is enabled by setting ALCNEN[3] address (0x23) to HIGH. It does not remove noise from the signal. The noise gate threshold ALCNTH[2:0] address (0x23) is set to a desired level so when there is no signal or a very quiet signal (pause), which is composed mostly of noise, the ALC holds the gain constant instead of amplifying the signal towards the target threshold. The noise gate only operates in conjunction with the ALC and ONLY in Normal mode. The noise gate flag is asserted when

(Signal at ADC – PGA gain – MIC Boost gain) < ALCNTH (ALC Noise Gate Threshold) (dB)

Levels at the extremes of the range may cause inappropriate operation, so care should be taken when setting up the function.

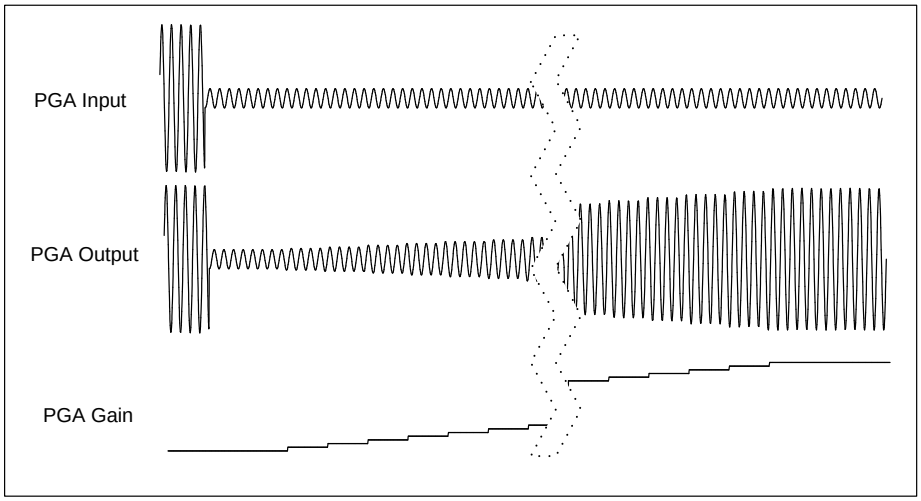


Figure 13: ALC Operation with Noise Gate disabled

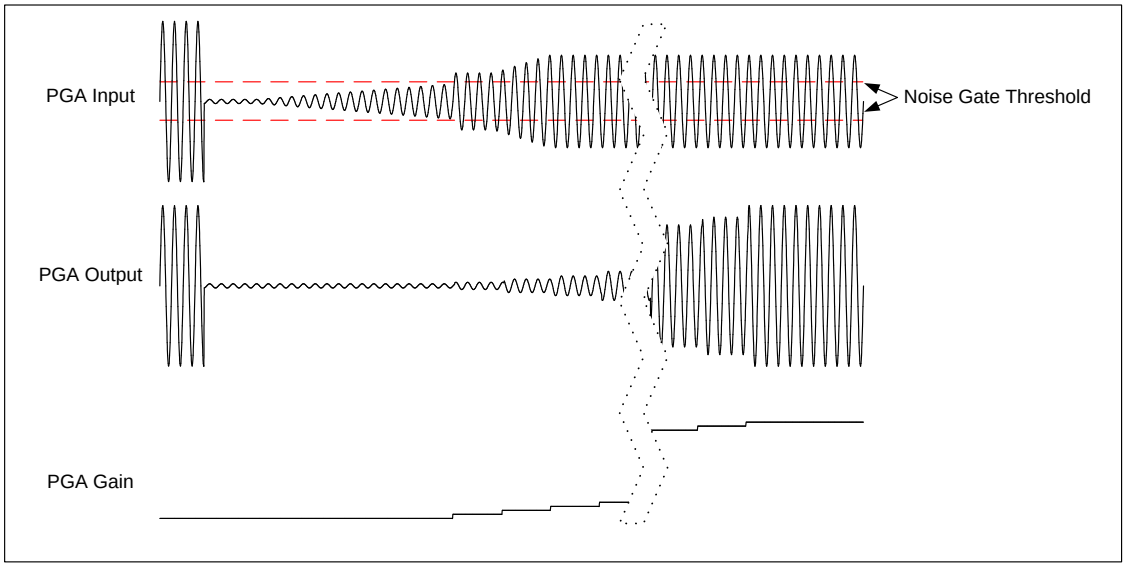


Figure 14: ALC Operation with Noise Gate Enabled

### 6.4.6 Zero Crossing

The PGA gain comes from either the ALC block when the ALC is enabled, or directly from the PGA gain register setting when the ALC is disabled. Zero crossing detection may be enabled to force PGA gain changes to occur only at an input zero crossing event. Enabling zero crossing detection limits clicks and pops that will occur if the gain changes while the input signal is at a voltage that is significantly higher or lower than zero.

There are two zero crossing detection enables:

- Register ALCZC[8] address (0x21) – is only relevant when the ALC is enabled.
- Register PGAZC[7] address (0x2D) – is only relevant when the ALC is disabled.

If the zero crossing function is enabled (using either register) and SCLKEN[0] address (0x07) is asserted, the zero cross timeout function may take effect. If the zero crossing flag does not change polarity within 0.25 seconds of a PGA gain update (either via ALC update or PGA gain register update), then the gain will update automatically. This backup system prevents the gain from locking up if the input signal has a small swing and/or a DC offset that prevents the zero crossing flag from triggering.

## 6.5 DAC Digital Filter Block

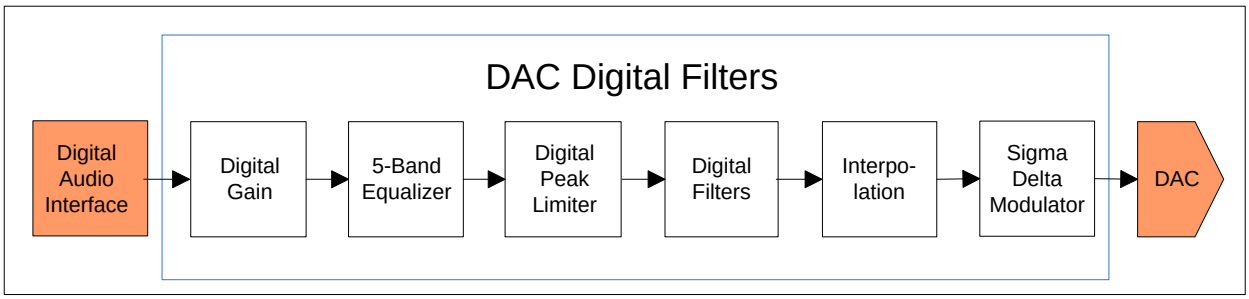


Figure 15: DAC Digital Filter Path

The DAC digital block uses 24-bit signal processing to generate analog audio using data from the audio data bus or from the ADC output. This block consists of a sigma-delta modulator, 5-band graphic equalizer, high pass filter, digital gain/filters, de-emphasis, and analog mixers. The DAC coding scheme is in twos complement format and the full-scale output level is proportional to VDDA. With a 3.3V supply voltage, the full-scale output level is 1.0$V_{RMS}$. The DAC is enabled by setting DACEN[0] address (0x03) bit HIGH.

| Bit(s) | Addr | Parameter | Programmable Range |
|---|---|---|---|
| DACEN[0] | 0x03 | DAC enable | 0 = Disable<br>1 = Enable |
| ADDAP[0] | 0x05 | Pass-through of ADC output data into DAC input | 0 = Disable<br>1 = Enable |
| DACPL[0] | 0x0A | DAC Polarity | 0 = No Inversion<br>1 = DAC Output Inverted |
| AUTOMT[2] | | Auto Mute | 0 = Disable<br>1 = Enable |
| DEEMP[5:4] | | Sample Rate | 32 kHz, 44.1 kHz, and 48 kHz |
| DACMT[6] | | Soft Mute | 0 = Disable<br>1 = Enable |
| DACGAIN[7:0] | 0x0B | DAC Volume Control | Range: -127dB to 0dB @ 0.5dB increment, 00 hex is Muted |
| DACLIMATK[3:0] | 0x18 | DAC Limiter Attack | Range: 68us to 139ms |
| DACLIMDCY[7:4] | | DAC Limiter Decay | Range: 544us to 1.1s |
| DACLIMEN[8] | | DAC Limiter Enable | 0 = Disable<br>1 = Enable |
| DACLIMBST[3:0] | 0x19 | DAC Limiter Volume Boost | Range: 0dB to +12dB @ 1dB increment |
| DACLIMTHL[6:4] | | DAC Limiter Threshold | Range: -6dB to -1bB @ 1dB increment |

Table 16: Registers associated with DAC Gain Control

### 6.5.1 DAC Soft Mute

The NAU88C10 also has a Soft Mute function, which smoothly attenuates the volume of the digital signal to zero. When un-muted, the gain will ramp back up to the register determined digital gain setting. This feature provides a tool that is useful to enable/disable DAC output without introducing pop and click sounds. To output any DAC signal, Soft Mute must be disabled by setting the DACMT[6] address (0x0A) bit to LOW.

### 6.5.2 DAC Auto Mute

The output of the DAC can also be muted by the analog Auto Mute function. The Auto Mute function is enabled by setting AUTOMT[2] address (0x0A) to HIGH and applied to the DAC output when there are 1024 or more consecutive zeros at its input. If at any time there is a non-zero DAC input sample value, the DAC will be un-muted, and the 1024 count will be reinitialized to zero.

### 6.5.3 DAC Sampling / Oversampling rate, Polarity, DAC Volume control and Digital Pass-through

The sampling rate of the DAC is determined entirely by the frequency of its input clock and the oversampling rate setting. The oversampling rate of the DAC can be changed to 64x or 128x. In the 128x oversampling mode, audio performance is improved at slightly higher power consumption. Because the additional supply current is only 1mA, in most applications, the 128x oversampling is preferred for maximum audio performance.
The polarity of the DAC output signal can be changed as a feature, and this can useful in management of the audio phase. This feature can help minimize audio processing that may be otherwise required as the data are passed to other stages in the system.

The effective output audio volume of the DAC can be changed using the digital volume control feature. This processes the output of the DAC to scale the output by the amount indicated in the volume register setting. Included is a “digital mute” value which will completely mute the signal output of the DAC. The digital volume setting can range from 0dB through -127dB in 0.5dB steps.

Digital audio pass-through allows the output of the ADC to be directly sent to the DAC as the input signal to the DAC for DAC output. In this mode of operation, the external digital audio signal for the DAC will be ignored. The pass-through function is useful for many test and application purposes, and the DAC output may be utilized in any way that is normally supported for the DAC analog output signals.

### 6.5.4 Hi-Fi DAC De-Emphasis and Gain Control

The NAU88C10 has Hi-Fi DAC gain control for signal conditioning. The level of attenuation for an eight-bit code X is given by: 0.5 × (X-255) dB for 1 ≤ X ≤ 255; MUTE for X = 0

It includes on-chip digital de-emphasis and is available for sample rates of 32 kHz, 44.1 kHz, and 48 kHz. The digital de-emphasis can be enabled by setting DEEMP[5:4] address (0x0A) bits depending on the input sample rate. The de-emphasis feature is included to accommodate audio recordings that utilize 50/15 μs pre-emphasis equalization as a means of noise reduction.

### 6.5.5 Digital DAC Output Peak Limiter

Output Peak-Limiters optimize the dynamic range by ensuring the signal will not exceed a certain threshold, while maximizing the RMS of the resulted audio signal, and minimizing audible distortions. NAU88C10 has a digital output limiter function. The operation of this is shown in figure below. In this diagram, the upper graph shows the envelope of the input/output signals and the lower graph shows the gain characteristic. The limiter has a programmable threshold, DACLIMTHL[6:4] address (0x19), which ranges from -1dB to -6dB in 1dB increments. The digital peak limiter seeks to keep the envelope of the output signal within the target threshold +/- 0.5dB. The attack and decay rates programmed in registers DACLIMATK[3:0] address (0x18) and DACLIMDCY[7:4] address (0x18) specify how fast the digital peak limiter decrease and increase the gain, respectively, in response to the envelope of the output signal falling outside of this range. In normal operation LIMBST=000 signals below this threshold are unaffected by the limiter.

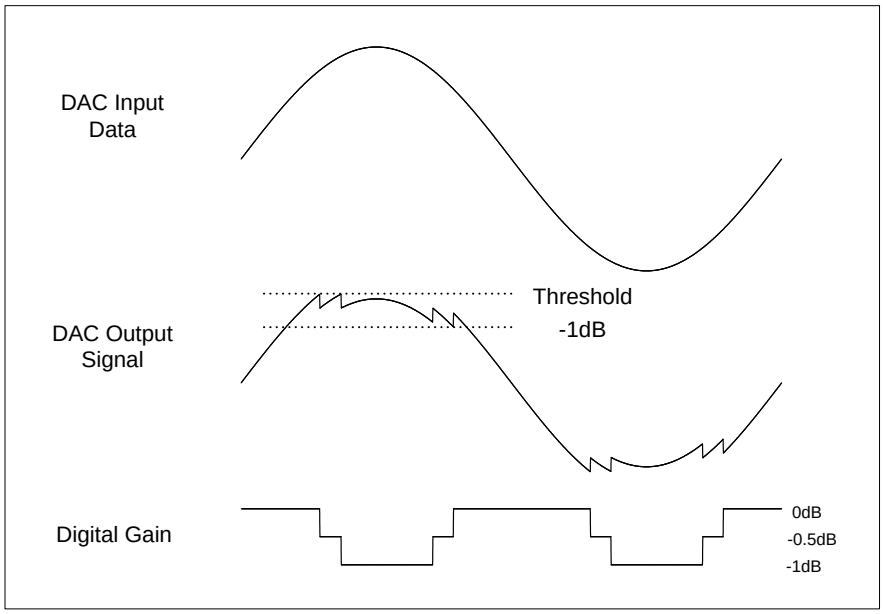


Figure 16: DAC Digital Limiter Control

### 6.5.6 Volume Boost

The limiter has programmable upper gain, which boosts signals below the threshold to compress the dynamic range of the signal and increase its perceived loudness. This operates as an ALC function with limited boost capability. The volume boost is from 0dB to +12dB in 1dB steps, controlled by the DACLIMBST[3:0] register bits. The output limiter volume boost can also be used as a stand-alone digital gain boost when the limiter is disabled.

### 6.5.7 5-Band Equalizer

NAU88C10 features 5-band graphic equalizer with low distortion, low noise, and wide dynamic range, and is an ideal choice for Hi-Fi applications. All five bands are fully parametric with independently adjustable bandwidth that displays exceptional tonal qualities. Each of the five bands offers +/- 12dB of boost and cut with 1dB resolution. The five bands are divided in to three sections Low, Mid and High bands. The High and the Low bands are shelving filters and the mid three are peak filters. The equalizer can be applied to the ADC or DAC path under control of the EQM[8] address (0x12) register bit.

| Bit(s) | Address | Parameter | Programmable Range |
|---|---|---|---|
| EQM[8] | 0x12 | Equalizer Enable | |
| EQ1CF[6:5] | | Band 1 Cut-off Frequency | Range: 80 Hz to 175 Hz |
| EQ1GC[4:0] | | Band 1 Gain Control | Range: -12 dB to +12 dB<br>@ 1.0dB increment |
| EQ2BW[8] | 0x13 | Band 2 Equalizer Bandwidth | Narrow or Wide |
| EQ2CF[6:5] | | Band 2 Centre Frequency | Range: 230 Hz to 500 Hz |
| EQ2GC[4:0] | | Band 2 Gain Control | Range: -12 dB to +12 dB<br>@ 1.0dB increment |
| EQ2BW[8] | 0x14 | Band 3 Equalizer Bandwidth | Narrow or Wide |
| EQ3CF[6:5] | | Band 3 Centre Frequency | Range: 650 Hz to 1.4 kHz |
| EQ3GC[4:0] | | Band 3 Gain Control | Range: -12 dB to +12 dB<br>@ 1.0dB increment |
| EQ4BW[8] | 0x15 | Band 4 Equalizer Bandwidth | Narrow or Wide |
| EQ4CF[6:5] | | Band 4 Centre Frequency | Range: 1.8 kHz to 4.1 kHz |
| EQ4GC[4:0] | | Band 4 Gain Control | Range: -12 dB to +12 dB<br>@ 1.0dB increment |
| EQ5CF[6:5] | 0x16 | Band 5 Cut-off Frequency | Range: 5.3 kHz to 11.7 kHz |
| EQ5GC[4:0] | | Band 5 Gain Control | Range: -12 dB to +12 dB<br>@ 1.0dB increment |

Table 17: Registers associated with Equalizer Control

## 6.6 Analog Outputs

The NAU88C10 features two different types of outputs, a single-ended or differential Mono output (MOUT) and a differential speaker outputs (SPKOUT+ and SPKOUT-). The speaker amplifiers designed to drive a load differentially; a configuration referred to as Bridge-Tied Load (BTL).

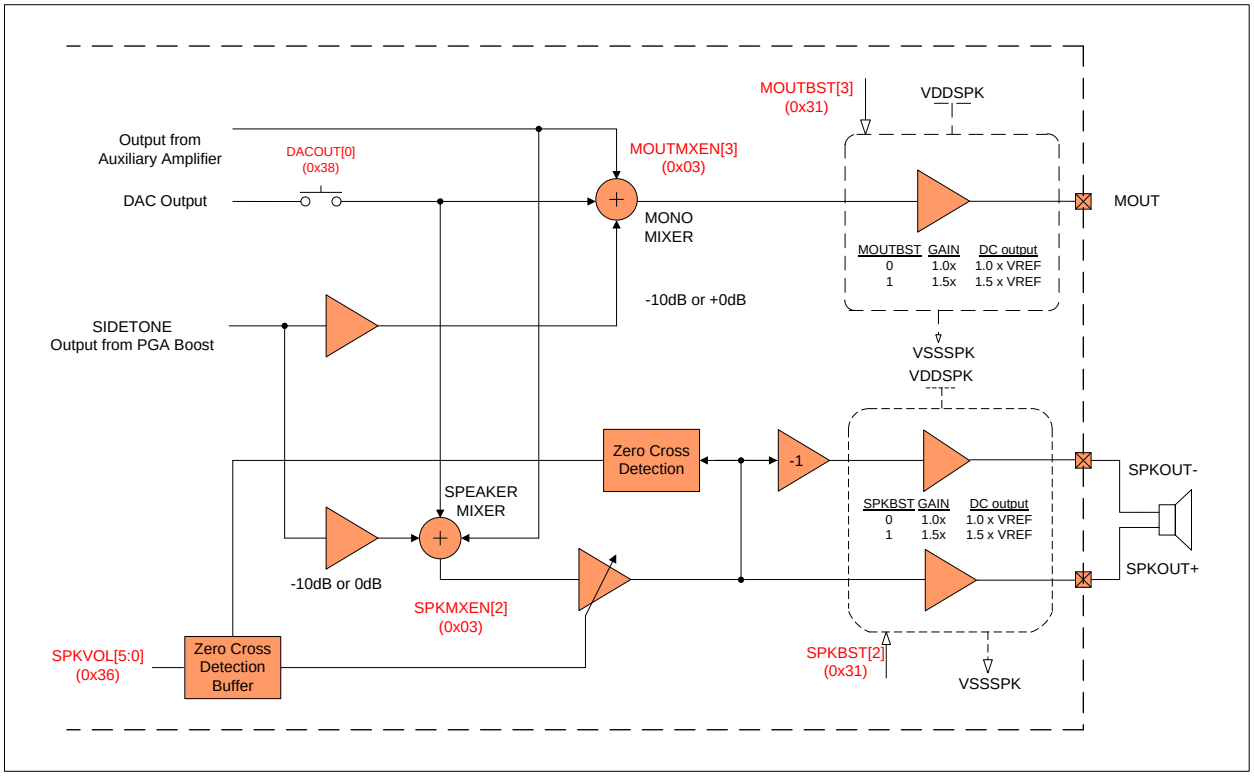


Figure 17: Speaker and MONO Analogue Outputs [To Update ? output from Auxilliary Amplifier]

***Important:*** For analog outputs de-poping purpose, when powering up speakers, headphone, AUXOUTs, certain delays are generated after enabling sequence. However, the delays are created by MCLK and sample rate register. For correct operation, sending I2S signal no earlier than 250ms after speaker or headphone enabled and MCLK appearing.

### 6.6.1 Speaker Mixer Outputs

The speaker amplifiers are designed to drive a load differentially; a configuration referred to as Bridge-Tied Load (BTL). The differential speaker outputs can drive a single 8Ω speaker or two headphone loads of 16Ω or higher, including differential line output applications. Driving the load differentially doubles the output voltage. The output of the speaker can be manipulated by changing attenuation and the volume (loudness of the output signal).

The output stage is powered by the speaker supply, VDDSPK, which are capable of driving up to 1.5$V_{RMS}$ signals (equivalent to 3$V_{RMS}$ into a BTL speaker). The speaker outputs can be controlled and can be muted individually. The output pins are at reference DC level when the output is muted.

| Bit(s) | Addr | Parameter | Programmable Range |
|---|---|---|---|
| SPKMXEN[2] | 0x03 | Speaker Mixer enable | 0 – Disabled<br>1 – Enabled |
| PSPKEN[5] | 0x03 | Speaker positive terminal enable | 0 – Disabled<br>1 – Enabled |
| NSPKEN[6] | 0x03 | Speaker negative terminal enable | 0 – Disabled<br>1 – Enabled |
| SPKATT[1] | 0x28 | Speaker output attenuation | 0 - 0dB<br>1 - -10dB |
| SPKBST[2] | 0x31 | Speaker output Boost | 0 – (1.0x VREF) Boost<br>1- (1.5 x VREF) Boost |
| SPKGAIN[5:0] | 0x36 | Speaker output Volume | Range: -57dB to +6dB @ 6dB increment |
| SPKMT[6] | 0x36 | Speaker output Mute | 0 – Speaker Enabled<br>1 – Speaker Muted |

Table 18: Speaker Output Controls

### 6.6.2 Mono Mixer Output

The single ended output can drive headphone loads of 16Ω or 32Ω or a line output. The MOUT can be manipulated by changing attenuation and the volume (loudness of the output signal).

The output stage is powered by the speaker supply, VDDSPK, which are capable of driving up to 1.5$V_{RMS}$ signals. The Mono output can be enabled for signal output or muted. The output pins are at reference DC level when the output is muted.

| Bit(s) | Addr | Parameter | Programmable Range |
|---|---|---|---|
| MOUTMXEN[3] | 0x03 | MONO mixer enable | 0 – Disabled<br>1 – Enabled |
| MOUTEN[7] | 0x03 | MONO output enable | 0 – Disabled<br>1 – Enabled |
| MOUTATT[2] | 0x28 | MONO output attenuation | 0 - 0dB<br>1 - -10dB |
| MOUTBST[3] | 0x31 | MONO output boost | 0 – (1.0x VREF) Boost<br>1 - (1.5 x VREF) Boost |
| MOUTMXMT[6] | 0x38 | MONO Output Mixer Mute | 0 – MONO Mixer Normal Mode<br>1 – MONO Mixer Muted |

| Bit(s) | Addr | Parameter | Programmable Range |
|---|---|---|---|
| MOUTMT[4] | 0x45 | MONO Output Mute | 0 – MONO Output Normal Mode<br>1 – MONO Output Muted |

Table 19: MONO Output Controls

### 6.6.3 Differential Output Configuration

The NAU88C10 features two different types of outputs, a single-ended or differential Mono output (MOUT) and a differential speaker output (SPKOUT+ and SPKOUT-). The speaker amplifiers are designed to drive a load differentially as Bridge-Tied Load (BTL).

Three differential output options can be configured from the three output pins: MOUT, SPKOUT+ and SPKOUT-. To enable differential outputs, three registers need to be configured accordingly: SPK2MOUT=1 (0x45[5]), AOUTMP=1 (0x31[0]) and 0x4F=0x100.

- Option 1: Two differential outputs by using pair of MOUT and SPKOUT-, SPKOUT+ and SPKOUT- for driving both headphone/earpiece and Speaker. Register setting: MOUTEN=1, NSPKEN=1, and PSPKEN =1
- Option 2: One differential output by using MOUT and SPKOUT- for driving headphone/earpiece. Register setting: MOUTEN=1, NSPKEN=1, and PSPKEN =0
- Option 3: One differential output by using SPKOUT+ and SPKOUT- for driving speaker. Register setting: MOUTEN=0, NSPKEN=1 and PSPKEN =1

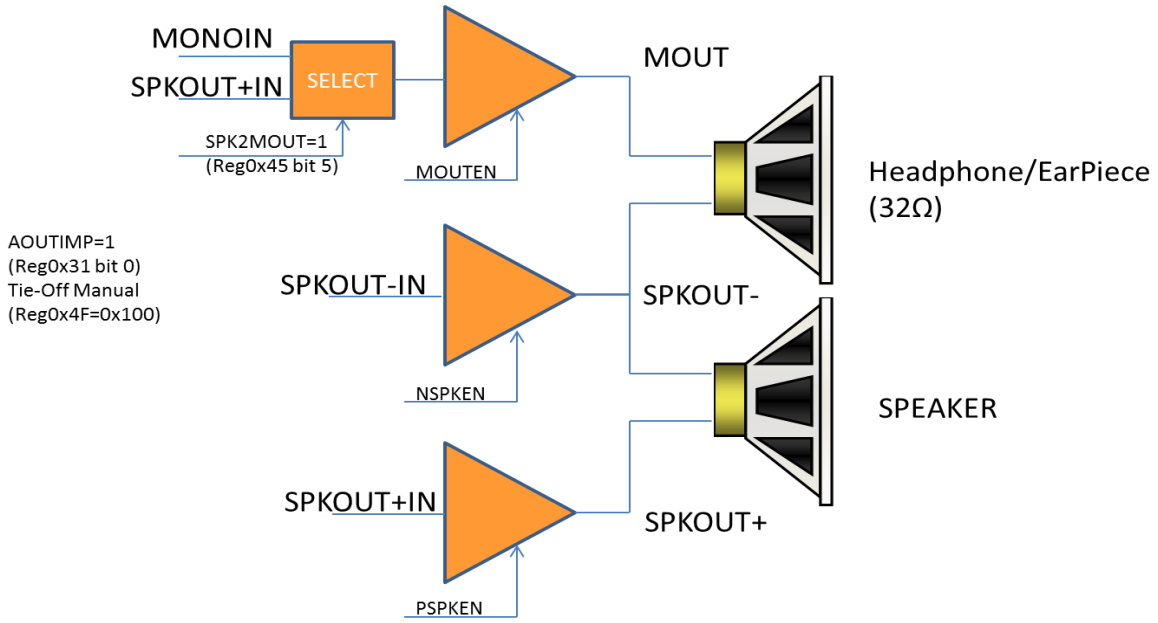

### 6.6.4 Unused Analog I/O

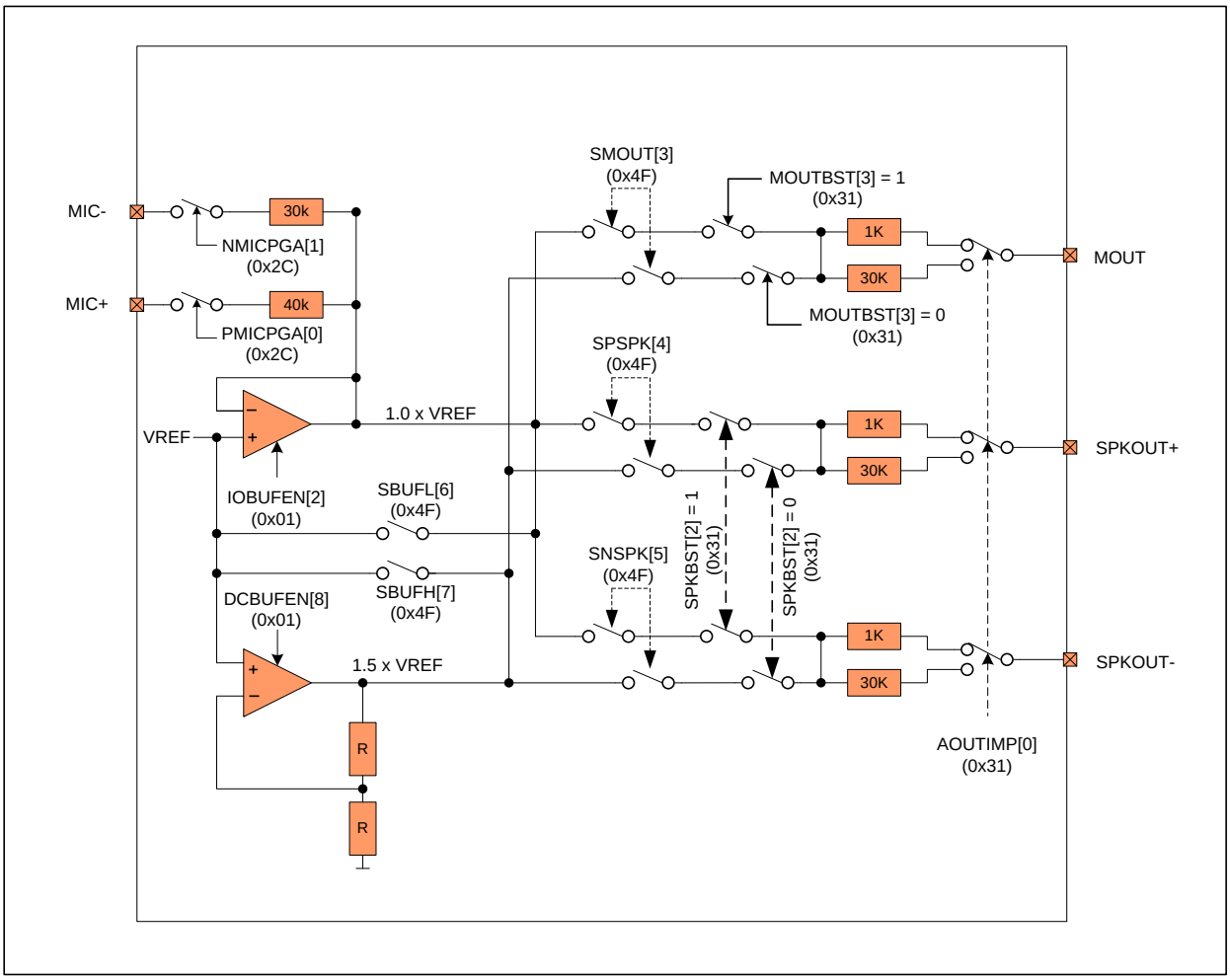


Figure 18: Tie-off Options for the Speaker and MONO output Pins

In audio and voice systems, any time there is a sudden change in voltage to an audio signal, an audible pop or click sound may be the result. Systems that change inputs and output configurations dynamically, or which are required to manage low power operation, need special attention to possible pop and click situations. The NAU88C10 includes many features, which may be used to greatly reduce or eliminate pop and click sounds. The most common cause of a pop or click signal is a sudden change to an input or output voltage. This may happen either in a DC coupled system, or in an AC coupled system.

The strategy to control pops and clicks is similar for both a DC coupled system and an AC coupled system. The case of the AC coupled system is the most common and the more difficult situation, and therefore, the AC coupled case will be the focus for this information section. When an input or output pin is being used, the DC level of that pin will be very close to half of the VDDA voltage that is present on the VREF pin. The only exception is that when outputs are operated in the 5-Volt mode known as the 1.5x boost condition, then the DC level for those outputs will be equal to 1.5xVREF.

In all cases, any input or output capacitors will become charged to the operating voltage of the used input or output pin. The goal to reduce pops and clicks is to insure that the charge voltage on these capacitors does not change suddenly at any time.

When an input or output is in a not-used operating condition, it is desirable to keep the DC voltage on that pin at the same voltage level as the DC level of the used operating condition. This is accomplished using special internal DC voltage sources that are at the required DC values. When an input or output is in the not-used condition, it is connected to the correct internal DC voltage as not to have a pop or click. This type of connection is known as a “tie-off” condition.

Two internal DC voltage sources are provided for making tie-off connections. One DC level is equal to the VREF voltage value, and the other DC level is equal to 1.5x the VREF value. All inputs are always tied off to the VREF voltage value. Outputs will automatically be tied to either the VREF voltage value or to the 1.5xVREF value, depending on the value of the “boost” control bit for that output. That is to say, when an output is set to the 1.5x gain condition, then that same output will automatically use the 1.5xVREF value for tie-off in the not-used condition. The input pull-ups are connected to IOBUFEN[2] address (0x01) buffer with a voltage source (VREF). The output pull-ups can be connected two different buffers depending on the voltage source. IOBUFEN[2] address (0x01) buffer is enabled if the voltage source is (VREF) and DCBUFEN[8] address (0x01) buffer is enabled if the voltage source is (1.5 x VREF). IOBUFEN[2] address (0x01) buffer is shared between input and output pins.

To conserve power, these internal voltage buffers may be enabled/disabled using control register settings. To better manage pops and clicks, there is a choice of impedance of the tie-off connection for unused outputs. The nominal values for this choice are 1kΩ and 30kΩ. The low impedance value will better maintain the desired DC level in the case when there is some leakage on the output capacitor or some DC resistance to ground at the NAU88C10 output pin. A tradeoff in using the low-impedance value is primarily that output capacitors could change more suddenly during power-on and power-off changes.

Automatic internal logic determines whether an input or output pin is in the used or un-used condition. This logic function is always active. An output is determined to be in the un-used condition when it is in the disabled unpowered condition, as determined by the power management registers. An input is determined to be in the un-used condition when all internal switches connected to that input are in the “open” condition.

## 6.7 General Purpose Control

### 6.7.1 Slow Timer Clock

| Addr | D8 | D7 | D6 | D5 | D4 | D3 | D2 | D1 | D0 | Default |
|---|---|---|---|---|---|---|---|---|---|---|
| **0x07** | 0 | 0 | 0 | 0 | 0 | SMPLR[2:0] | | | SCLKEN | **0x000** |

Table 20: General Purpose Control

An internal Slow Timer Clock is supplied to automatically control features that happen over a relatively long period of time, or time-spans. This enables the NAU88C10 to implement long time-span features without any host/processor management or intervention.

The Slow Timer Clock supports automatic time out for the zero-crossing holdoff of PGA volume changes. If this feature is required, the Slow Timer Clock must be enabled. The Slow Timer Clock is initialized in the disabled state.

The Slow Timer Clock rate is derived from MCLK using an integer divider that is compensated for the sample rate as indicated by the register address (0x07). If the sample rate register value precisely matches the actual sample rate, then the internal Slow Timer Clock rate will be a constant value of 128ms. If the actual sample rate is, for example, 44.1kHz and the sample rate selected in register 0x07 is 48kHz, the rate of the Slow Timer Clock will be approximately 10% slower in direct proportion of the actual vs. indicated sample rate. This scale of difference should not be important in relation to the dedicated end uses of the Slow Timer Clock.

## 6.8 Clock Generation Block

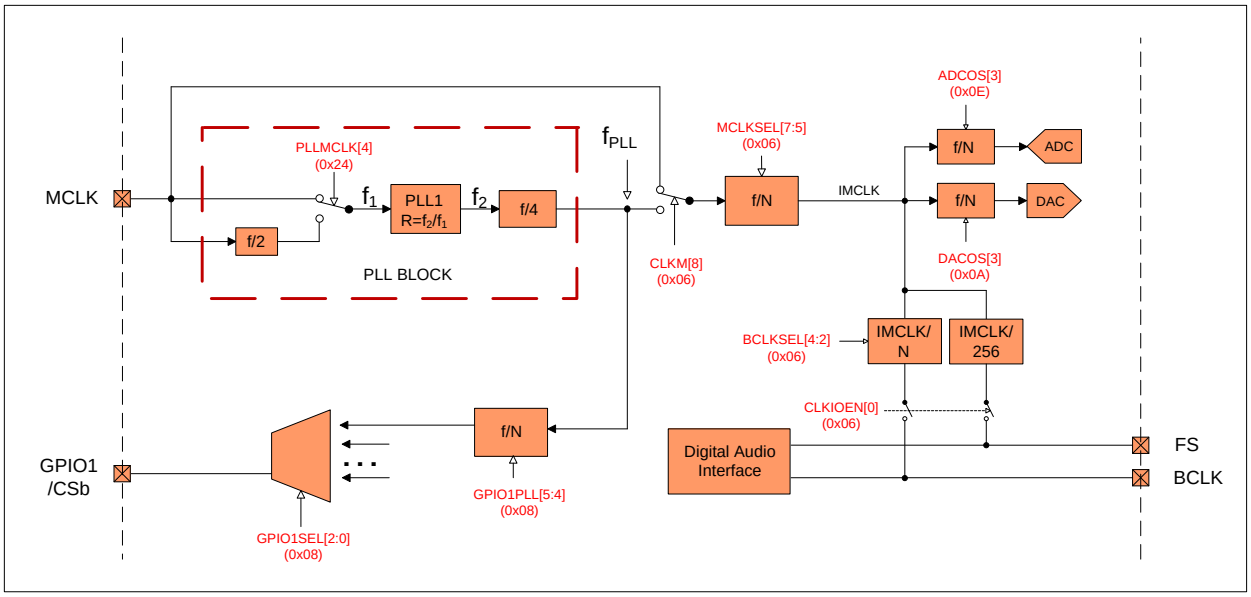


Figure 19: PLL and Clock Select Circuit

The NAU88C10 has two basic clock modes that support the ADC and DAC data converters. It can accept external clocks in the slave mode, or in the master mode, it can generate the required clocks from an external reference frequency using an internal PLL (Phase Locked Loop). The internal PLL is a fractional type scaling PLL, and therefore, a very wide range of external reference frequencies can be used to create accurate audio sample rates.

Separate from this ADC and DAC clock subsystem, audio data are clocked to and from the NAU88C10 by means of the control logic described in the Digital Audio Interfaces section. The Frame Sync (FS) and Bit Clock (BCLK) pins in the Digital Audio Interface manage the audio bit rate and audio sample rate for this data flow.

It is important to understand that the Digital Audio Interface does not determine the sampling rate for the ADC and DAC data converters, and instead, this rate is derived exclusively from the Internal Master Clock (IMCLK). It is therefore a requirement that the Digital Audio Interface and data converters be operated synchronously, and that the FS, BCLK, and IMCLK signals are all derived from a common reference frequency. If these three clocks signals are not synchronous, audio quality will be reduced.

The IMCLK is always exactly 256 times the sampling rate of the data converters. IMCLK is output from the Master Clock Prescaler. The prescaler reduces by an integer division factor the input frequency input clock. The source of this input frequency clock is either the external MCLK pin, or the output from the internal PLL Block.

| Addr | D8 | D7 | D6 | D5 | D4 | D3 | D2 | D1 | D0 | Default |
|---|---|---|---|---|---|---|---|---|---|---|
| **0x01** | DCBUFEN | 0 | | PLLEN | MICBIASEN | ABIASEN | IOBUFEN | REFIMP | | **0x000** |
| **0x06** | CLKM | MCLKSEL[2:0] | | | BCLKSEL[2:0] | | | 0 | CLKIOEN | **0x140** |
| **0x07** | 0 | 0 | 0 | 0 | 0 | SMPLR[2:0] | | | SCLKEN | **0x000** |
| **0x24** | 0 | 0 | 0 | 0 | PLLMCLK | PLLN[3:0] | | | | **0x008** |
| **0x25** | 0 | 0 | 0 | PLLK[23:18] | | | | | | **0x00C** |
| **0x26** | PLLK[17:9] | | | | | | | | | **0x093** |
| **0x27** | PLLK[8:0] | | | | | | | | | **0x0E9** |

Table 21: Registers associated with PLL

In Master Mode, the IMCLK signal is used to generate FS and BCLK signals that are driven onto the FS and BCLK pins and input to the Digital Audio Interface. FS is always IMCLK/256 and the duty cycle of FS is automatically adjusted to be correct for the mode selected in the Digital Audio Interface. The frequency of BCLK may optionally be divided to optimize the bit clock rate for the application scenario.

In Slave Mode, there is no connection between IMCLK and the FS and BCLK pins. In this mode, FS and BLCK are strictly input pins, and it is the responsibility of the system designer to insure that FS, BCLK, and IMCLK are synchronous and scaled appropriately for the application.

### 6.8.1 Phase Locked Loop (PLL) General description

The PLL may be optionally used to multiply an external input clock reference frequency by a high resolution fractional number. To enable the use of the widest possible range of external reference clocks, the PLL block includes an optional divide-by-two prescaler for the input clock, a fixed divide-by-four scaler on the PLL output, and an additional programmable integer divider that is the Master Clock Prescaler.

The high resolution fraction for the PLL is the ratio of the desired PLL oscillator frequency ($f_2$), and the reference frequency at the PLL input ($f_1$). This can be represented as $R = f_2/f_1$, with R in the form of a decimal number: xy.abcdefgh. To program the NAU88C10, this value is separated into an integer portion ("xy"), and a fractional portion, "abcdefgh". The fractional portion of the multiplier is a value that when represented as a 24-bit binary number (stored in three 9-bit registers on the NAU88C10), very closely matches the exact desired multiplier factor.

To keep the PLL within its optimal operating range, the integer portion of the decimal number ("xy"), must be any of the following decimal values: 6, 7, 8, 9, 10, 11, or 12. The input and output dividers outside of the PLL are often helpful to scale frequencies as needed to keep the "xy" value within the required range. Also, the optimum PLL oscillator frequency is in the range between 90MHz and 100MHz, and thus, it is best to keep $f_2$ within this range.
In summary, for any given design, choose:

| Equations | Description | Notes |
|---|---|---|
| IMCLK = (256) * (desired codec sample rate) | IMCLK = desired Master Clock | |
| $f_2$ = (4 * P * IMCLK) | where P is the Master Clock divider integer value;<br>optimal $f_2$: 90MHz< $f_2$ <100MHz | The integer values for D and P are chosen to keep the PLL in its optimal operating range. It may be best to assign initial values of 1 to both D and P, and then by inspection, determine if they should be a different value. |
| $f_1$ = (MCLK / D) | where D is the PLL Prescale factor of 1, or 2, and MCLK is the frequency at the MCLK pin | |
| R = $f_2$ / $f_1$ = xy.abcdefgh decimal value | which is the fractional frequency multiplication factor for the PLL | |
| N = xy | truncated integer portion of the R value and limited to decimal value 6, 7, 8, 9, 10, 11, or 12 | |
| K = ($2^{24}$) * (0.abcdefgh) | rounded to the nearest whole integer value then converted to a binary 24-bit value | |

Table 22: Registers associated with PLL

### 6.8.2 Phase Locked Loop (PLL) Design Example

In an example application, a desired sample rate for the DAC is known to be 48.000kHz. Therefore, it is also known that the IMCLK rate will be 256fs, or 12.288MHz. Because there is a fixed divide-by-four scaler on the PLL output, then the desired PLL oscillator output frequency will be 49.152MHz.

In this example system design, there is any an available 12.000MHz clock from the USB subystem. To reduce system cost, this clock will also be used for audio. Therefore, to use the 12MHz clock for audio, the desired fractional multiplier ratio would be R = 49.152/12.000 = 4.096. This value, however, does not meet the requirement that the "xy" whole number portion of the multiplier be in the inclusive range between 6 and 12. To meet the requirement, the Master Clock Prescaler can be set for an additional divide-by-two factor. This now makes the PLL required oscillator frequency 98.304 MHz, and the improved multiplier value is now R = 98.304/12.000 = 8.192.

To complete this portion of the design example, the integer portion of the multiplier is truncated to the value, 8 and the fractional portion is multiplied by $2^{24}$, as to create the needed 24-bit binary fractional value. The calculation for this is: $(2^{24})(0.192) = 3221225.472$.

It is best to round this value to the nearest whole value of 3221225, or hexadecimal 0x3126E9.

Below are additional examples of results for this calculation applied to commonly available clock frequencies and desired IMCLK 256fs sample rates.

| MCLK (MHz) | Desired Output (MHz) | Input Frequency ($f_1$) | $f_2$ (MHz) | MCLK Divider bits | R | N (Hex) | K (Hex) | Actual Register Setting | | |
|---|---|---|---|---|---|---|---|---|---|---|
| | | | | | | | | PLLK[23:18] | PLLK[17:9] | PLLK[8:0] |
| 12.0 | 11.28960 | MCLK/1 | 90.3168 | $f_{PLL}/2$ | 7.526400 | 7 | 86C226 | 21 | 161 | 26 |
| 12.0 | 12.28800 | MCLK/1 | 98.3040 | $f_{PLL}/2$ | 8.192000 | 8 | 3126E9 | 0C | 93 | E9 |
| 14.4 | 11.28960 | MCLK/1 | 90.3168 | $f_{PLL}/2$ | 6.272000 | 6 | 45A1CA | 11 | D0 | 1CA |
| 14.4 | 12.28800 | MCLK/1 | 98.3040 | $f_{PLL}/2$ | 6.826667 | 6 | D3A06D | 34 | 1D0 | 6D |
| 19.2 | 11.28960 | MCLK/2 | 90.3168 | $f_{PLL}/2$ | 9.408000 | 9 | 6872B0 | 1A | 39 | B0 |
| 19.2 | 12.28800 | MCLK/2 | 98.3040 | $f_{PLL}/2$ | 10.240000 | 10 | 3D70A3 | 0F | B8 | A3 |
| 19.8 | 11.28960 | MCLK/2 | 90.3168 | $f_{PLL}/2$ | 9.122909 | 9 | 1F76F8 | 07 | 1BB | F8 |
| 19.8 | 12.28800 | MCLK/2 | 98.3040 | $f_{PLL}/2$ | 9.929697 | 9 | EE009E | 3B | 100 | 9E |
| 24.0 | 11.28960 | MCLK/2 | 90.3168 | $f_{PLL}/2$ | 7.526400 | 7 | 86C226 | 21 | 161 | 26 |
| 24.0 | 12.28800 | MCLK/2 | 98.3040 | $f_{PLL}/2$ | 8.192000 | 8 | 3126E9 | 0C | 93 | E9 |
| 26.0 | 11.28960 | MCLK/2 | 90.3168 | $f_{PLL}/2$ | 6.947446 | 6 | F28BD4 | 3C | 145 | 1D4 |
| 26.0 | 12.28800 | MCLK/2 | 98.3040 | $f_{PLL}/2$ | 7.561846 | 7 | 8FD526 | 23 | 1EA | 126 |

Table 23: PLL Frequency Examples

## 6.9 Control Interface

The NAU88C10 features a 2-Wire control interface compatible with industry $I^2C$ serial bus protocol using a bidirectional data signal (SDIO) and a clock signal (SCLK).

### 6.9.1 2-WIRE Serial Control (I2C Style Interface)

The NAU88C10 supports a bidirectional bus oriented protocol. The protocol defines any device that sends data onto the bus as a transmitter and the receiving device as the receiver. Therefore, the 2-Wire operates as slave interface. All communication over the 2-Wire interface is conducted by sending the MSB of each byte of data first.

#### 6.9.1.1 2-WIRE Protocol Convention

All 2-Wire interface operations must begin with a START condition, which is a HIGH to LOW transition of SDIO while SCLK is HIGH. All 2-Wire and all interface operations are terminated by a STOP condition, which is a LOW to HIGH transition of SDIO while SCLK is HIGH. A STOP condition at the end of a write operation places the device in standby mode. An acknowledge (ACK), is a software convention used to indicate a successful data transfer. The transmitting device, either master or slave, releases the SDIO bus after transmitting eight bits. During the ninth clock cycle, the receiver pulls the SDIO line LOW to acknowledge the reception of the eight bits of data.

Following a START condition, the master must output a device address byte. The 7-MSB bits “0011010” are the device address. The LSB of the device address byte is the R/W bit and defines a (R/W = 0) or write (R/W = 1) operation. When this, R/W, bit is a “1”, then a operation is selected and when “0” the device selects a write operation. The device outputs an acknowledge LOW for a correct device address and HIGH for an incorrect device address on the SDIO pin.

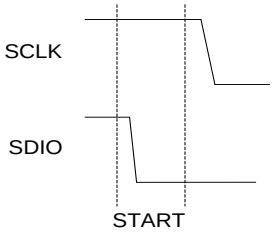


Figure 20: Valid START Condition

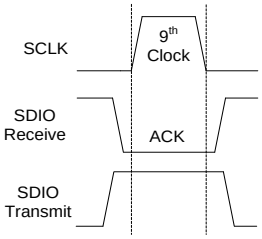


Figure 21: Valid Acknowledge

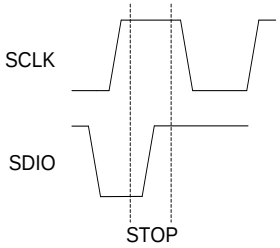


Figure 22: Valid STOP Condition

| | | | | | | | | |
|---|---|---|---|---|---|---|---|---|
| 0 | 0 | 1 | 1 | 0 | 1 | 0 | R/W | Device Address Byte |
| A6 | A5 | A4 | A3 | A2 | A1 | A0 | Write - D8<br>Read - 0 | Control Address Byte |
| D7 | D6 | D5 | D4 | D3 | D2 | D1 | D0 | Data Byte |

Figure 23: Slave Address Byte, Control Address Byte, and Data Byte

#### 6.9.1.2 2-WIRE Write Operation

A Write operation consists of a two-byte instruction followed by one or more Data Bytes. A Write operation requires a START condition, followed by a valid device address byte, a valid control address byte, data byte(s), and a STOP condition. After each three bytes sequence, the NAU88C10 responds with an ACK and the 2-Wire interface enters a standby state.

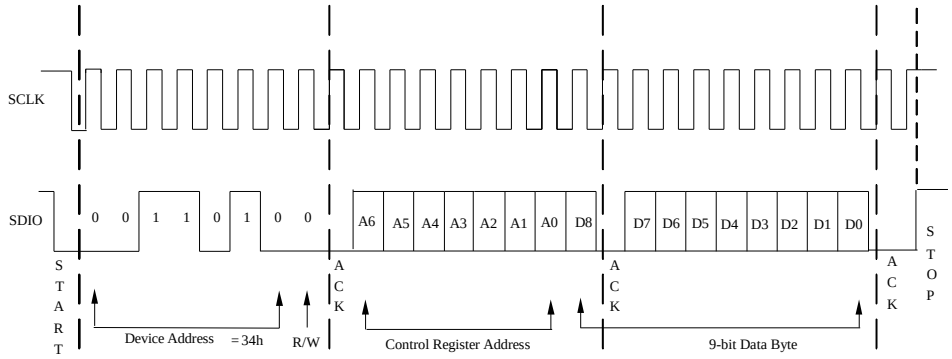


Figure 24: Byte Write Sequence

#### 6.9.1.3 2-WIRE Operation

A 2-wire read operation consists of a three-byte instruction followed by one or more Data Bytes. The master initiates the operation issuing the following sequence: a START condition, device address byte with the R/W bit set to “0”, a control address byte, a second START condition, and a second device address byte with the R/W bit set to “1”.

After each of the three bytes, the NAU88C10 responds with an ACK. Then the NAU88C10 transmits Data Bytes as long as the master responds with an ACK during the SCLK cycle following the ninth bit of each byte. The master terminates the operation (issuing a STOP condition) following the last bit of the last Data Byte.

After reaching the memory location 7Fh the pointer “rolls over” to 00h, and the device continues to output data for each ACK received.

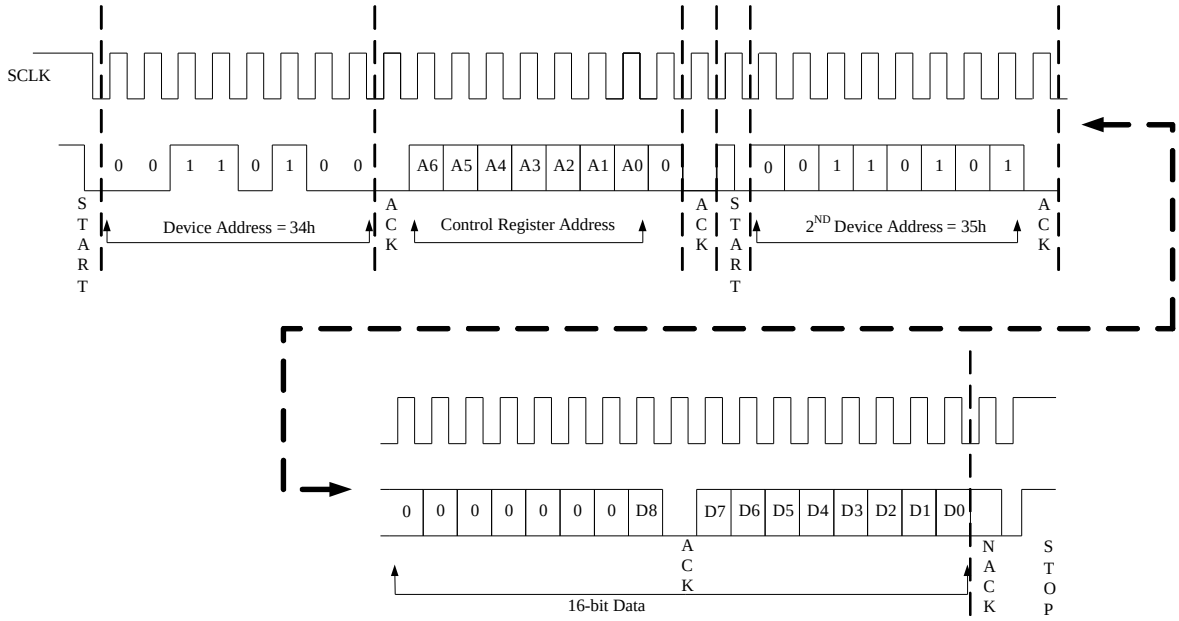


Figure 25: 2-Wire Read Sequence

## 6.10 Digital Audio Interfaces

NAU88C10 only uses the Left channel to transfer data in normal mode. It supports an independent digital interface for voice and audio. The digital interface is used to input digital data to the DAC, or output digital data from the ADC. The digital interface can be configured to Master mode or Slave mode.

Master mode is configured by setting CLKIOEN[0] address (0x06) bit to HIGH. The main clock (MCLK) of the digital interface is provided from an external clock either from a crystal oscillator or from a microcontroller. With an appropriate MCLK, the device generates bit clock (BCLK) and frame sync (FS) internally in the master mode. By generating the bit clock and frame sync internally, the NAU88C10 has full control of the data transfer.

Slave mode is configured by setting CLKIOEN[0] address (0x06) bit to LOW. In this mode, an external controller has to supply the bit clock and the frame sync. The NAU88C10 uses ADCOUT, DACIN, FS, and BCLK pins to control the digital interface. Care needs to be exercised when designing a system to operate the NAU88C10 in this mode as the relationship between the sample rate, bit clock, and frame sync needs to be controlled by other controller. In both modes of operation, the internal MCLK and MCLK prescalers determine the sample rate for the DAC and ADC.

The output state of the ADCOUT pin by default is pulled-low. Depending on the application, the output can be configured to be Hi-Z, pull-low, pull-high, Low or High. To configure the output, three different bits have to be set. First the output switched to the mask by setting PUDOEN[5] address (0x3C), then the mask has to be enabled be setting

PUDPE[4] address (0x3C) and finally output state select pulled up or down by PUDPS[3] address (0x3C). Six different audio formats are supported by NAU88C10 with MSB first and they are as follows.

| AIFMT[4] Addr: (0x04) | AIFMT[3] Addr: (0x04) | PCMTSEN[8] Addr: (0x3C) | PCMB[1] Addr: (0x3C) | PCM Mode |
|---|---|---|---|---|
| 0 | 0 | 0 | 0 | Right Justified |
| 0 | 1 | 0 | 0 | Left Justified |
| 1 | 0 | 0 | 0 | $I^2S$ |
| 1 | 1 | 0 | 0 | PCM A |
| 1 | 1 | 0 | 1 | PCM B |
| 1 | 1 | 1 | Don't Care | PCM Time Slot |

Table 24: Standard Interface modes

| Addr | D8 | D7 | D6 | D5 | D4 | D3 | D2 | D1 | D0 | Default |
|---|---|---|---|---|---|---|---|---|---|---|
| 0x04 | BCLKP | FSP | WLEN[1:0] | | AIFMT[1:0] | | DACPHS | ADCPHS | 0 | 0x050 |
| 0x06 | CLKM | MCLKSEL[2:0] | | | BCLKSEL[2:0] | | | 0 | CLKIOEN | 0x140 |
| 0x3B | TSLOT[8:0] | | | | | | | | | 0x000 |
| 0x3C | PCMTSEN | TRI | PCM8BIT | PUDOEN | PUDPE | PUDPS | LOUTR | PCMB | TSLOT[9:8] | 0x000 |

Table 25: Audio Interface Control Registers

### 6.10.1 Right Justified audio data

In right justified interface (normal mode), the left channel serial audio data is synchronized with the frame sync. Left channel data is transferred during the HIGH frame sync. The MSB data is sampled first. The data is latched on the last rising edge of BCLK before frame sync transition (FS). The LSB is aligned with the falling edge of the frame sync signal (FS). Right justified format is selected by setting AIFMT[1:0] address (0x04) to "00" binary in conjunction with PCMTSEN[8] address (0x3C) set to LOW.

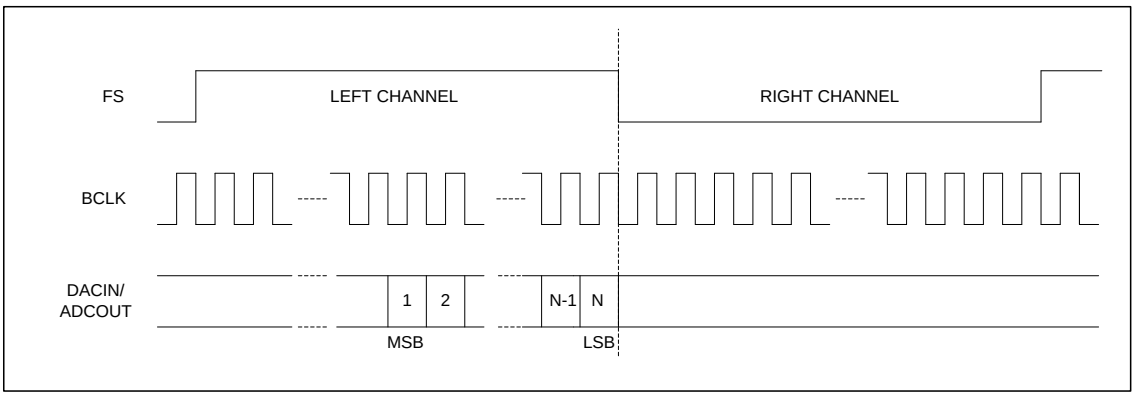


Figure 26: Right Justified Audio Interface (Normal Mode)

NAU88C10 features a special mode where the device outputs Left channel data to both Left and Right channels. This is accomplished by setting LOUTR[2] address (0x3C) to “1”.

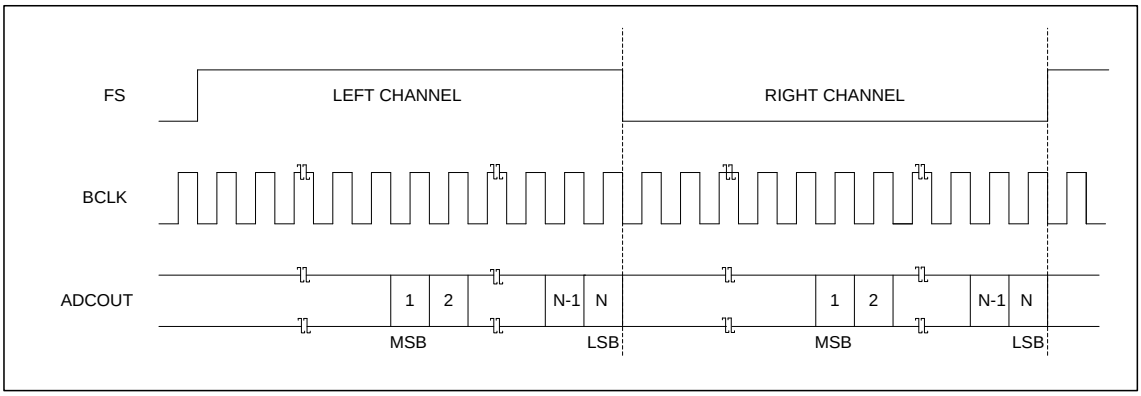


Figure 27: Right Justified Audio Interface (Special mode)

### 6.10.2 Left Justified audio data

In Left justified interface (normal mode), the left channel serial audio data is synchronized with the frame sync. Left channel data is transferred during the HIGH frame sync. The MSB data is sampled first and is available on the first rising edge of BCLK following a frame sync transition (FS). Left justified format is selected by setting AIFMT[1:0] address (0x04) to “01” binary in conjunction with PCMTSEN[8] address (0x3C) set to LOW.

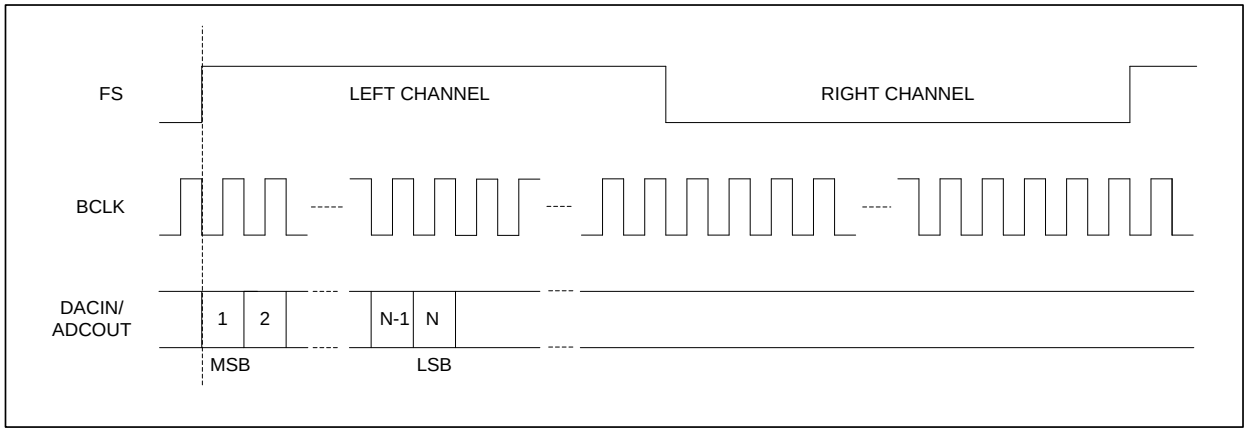


Figure 28: Left Justified Audio Interface (Normal Mode)

NAU88C10 features a special mode where the device outputs Left channel data to both Left and Right channels. This is accomplished by setting LOUTR[2] address (0x3C) to “1”.

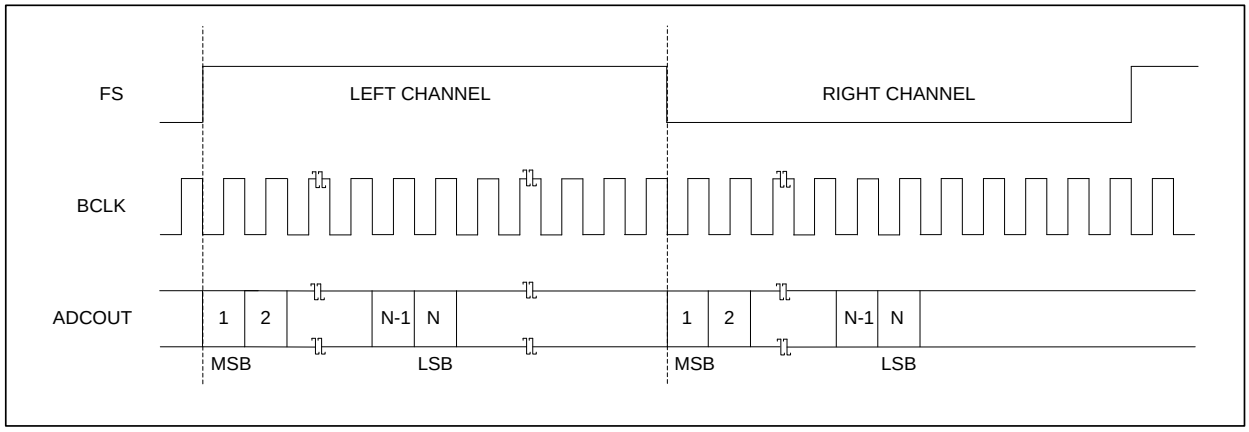


Figure 29: Left Justified Audio Interface (Special mode)

### 6.10.3 I2S audio data

In I$^2$S interface (normal mode), the left channel serial audio data is synchronized with the frame sync. Left channel data is transferred during the LOW frame sync. The MSB data is sampled first. The data is latched on the second rising edge of BCLK following a frame sync transition (FS). I$^2$S format is selected by setting AIFMT[1:0] address (0x04) to “10” binary in conjunction with PCMTSEN[8] address (0x3C) set to LOW.

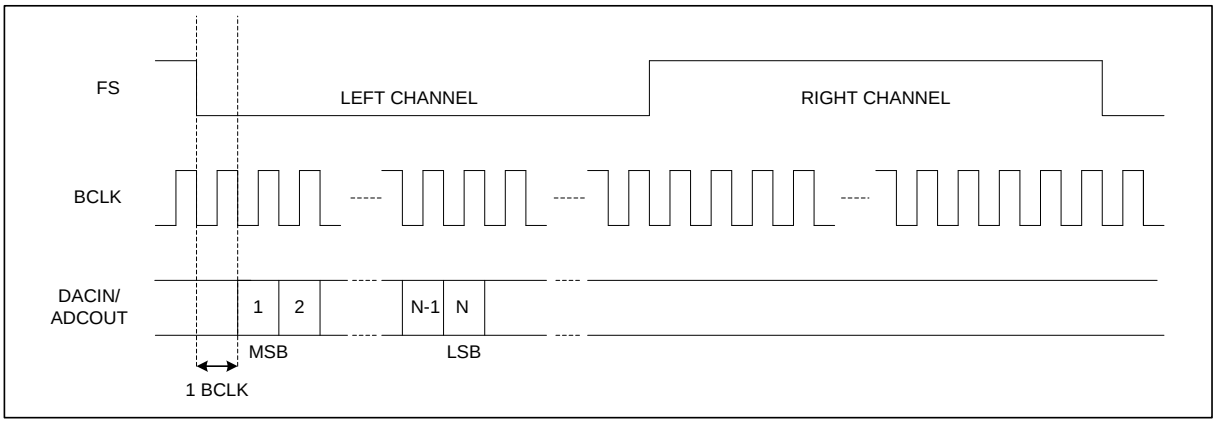


Figure 30: I2S Audio Interface (Normal Mode)

NAU88C10 features a special mode where the device outputs Left channel data to both Left and Right channels. This is accomplished by setting LOUTR[2] address (0x3C) to “1”

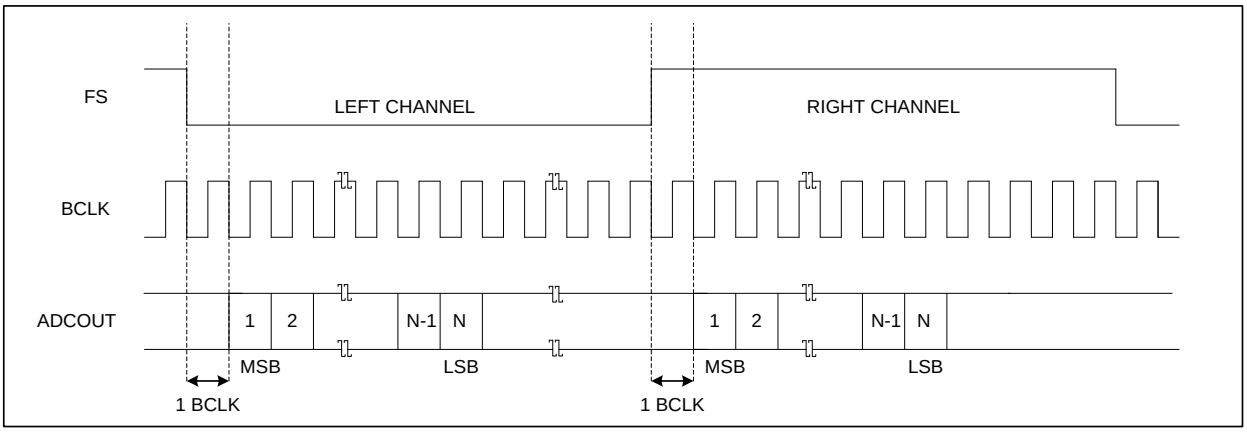


Figure 31: I2S Audio Interface (Special mode)

### 6.10.4 PCM audio data

In PCM interface (normal mode), the left channel serial audio data is synchronized with the frame sync. Left channel data is transferred during the LOW frame sync. The MSB data is sampled first. The data is latched on the second rising edge of BCLK following a frame sync transition (FS). PCM format is selected by setting AIFMT[4:3] address (0x04) to “11” binary in conjunction with PCMTSEN[8] address (0x3C) set to LOW.

The digital data can be forced to appear on the right phase of the FS by setting ADCPHS[0] and DACPHS[1] address (0x04) bits to HIGH respectively. The starting point of the right phase data depends on the word length WLEN[6:5] address (0x04) after the frame sync transition (FS).

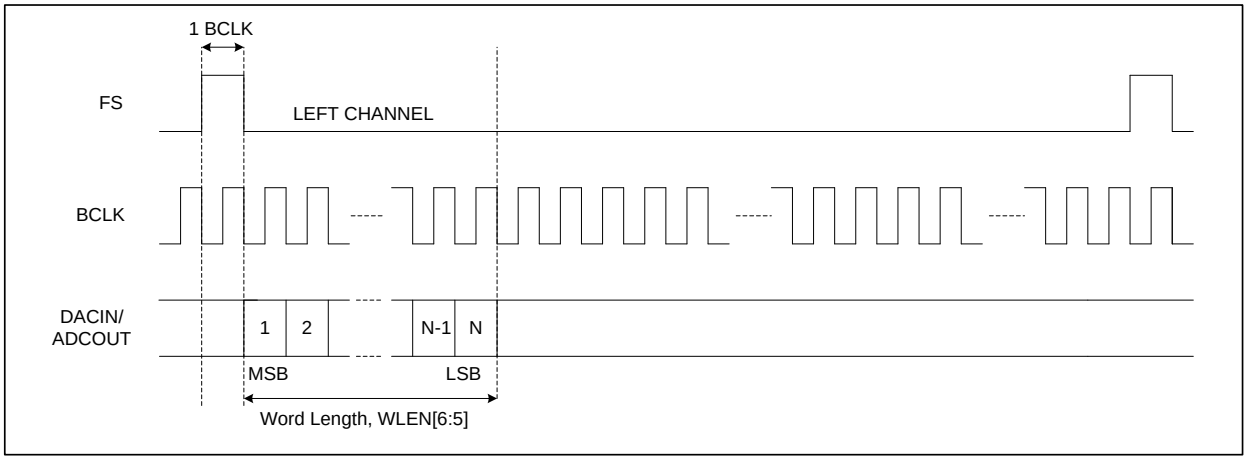


Figure 32: PCM Mode Audio Interface (Normal Mode)

NAU88C10 features a special mode where the device outputs Left channel data to both Left and Right channels. This is accomplished by setting LOUTR[2] address (0x3C) to “1”.

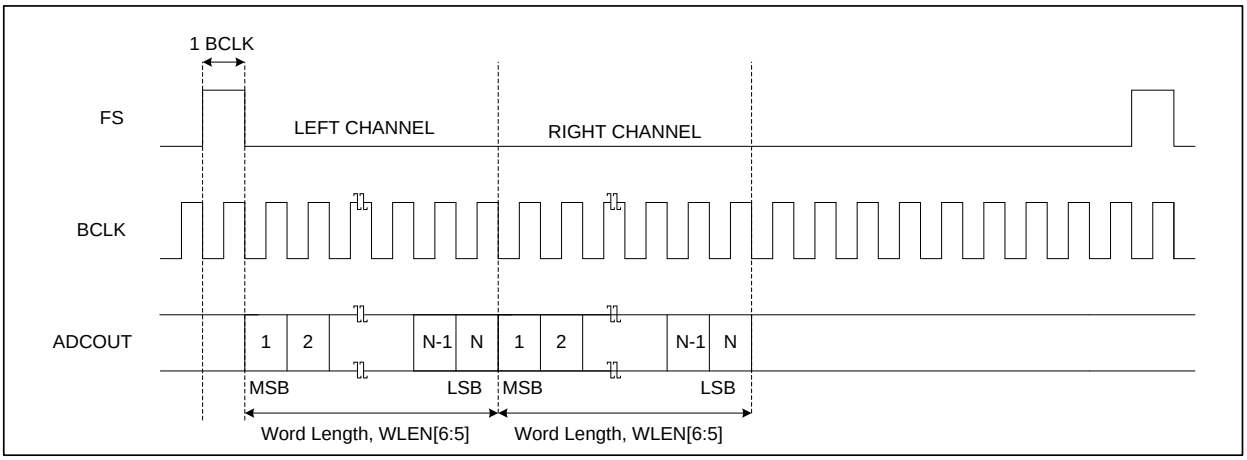


Figure 33: PCM Mode Audio Interface (Special mode)

### 6.10.5 PCM Time Slot audio data

In PCM Time-Slot interface (normal mode), the left channel serial audio data is synchronized with the frame sync. Left channel data is transferred during the LOW frame sync. The MSB data is sampled first. The starting point of the timeslot is controlled by a 10-bit byte TSLOT[9:0] address (0x3B and 0x3C). The data is latched on the first rising edge of BCLK following a frame sync transition (FS) providing PCM is in timeslot zero (TSLOT[9:0] = 000). PCM Time-Slot format is selected by setting AIFMT[4:3] address (0x04) to “11” binary in conjunction with PCMTSEN[8] address (0x3C) set to HIGH. The digital data can be forced to appear on the right phase of the FS by setting ADCPHS[0] and DACPHS[1] address (0x04) bits to HIGH respectively. The starting point of the right phase data depends on the word length WLEN[6:5] address (0x04) and timeslot assignment TSLOT[9:0] address (0x3B and 0x3C) after the frame sync transition (FS). DACIN will return to the bus condition either on the negative edge of BCLK during the LSB, or on the positive edge of BCLK following the LSB depending on the setting of TRI[7] address (0x3C). Tri-stating on the negative edge allows the transmission of data by multiple sources in adjacent timeslots without the risk of driver contention.

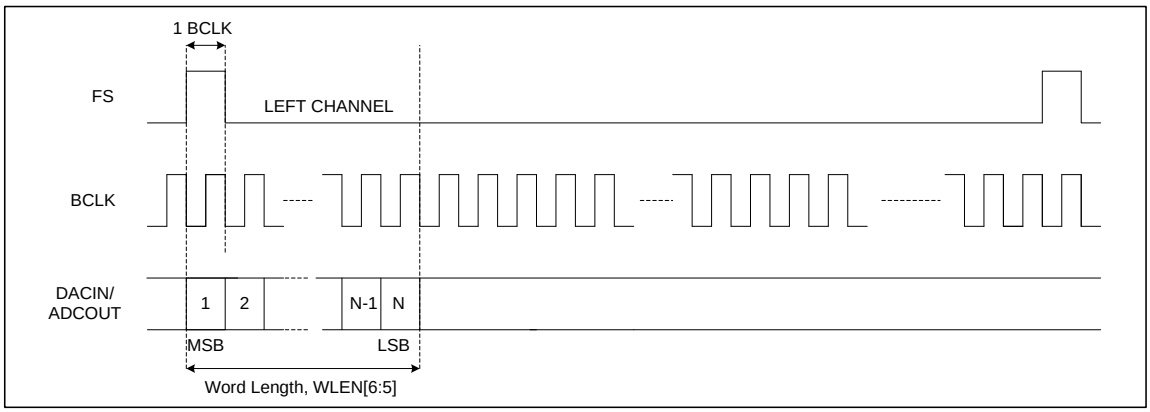


Figure 34: PCM Time Slot Mode (Time slot = 0) (Normal Mode)

NAU88C10 features a special mode where the device outputs Left channel data to both Left and Right channels. This is accomplished by setting LOUTR[2] address (0x3C) to "1".

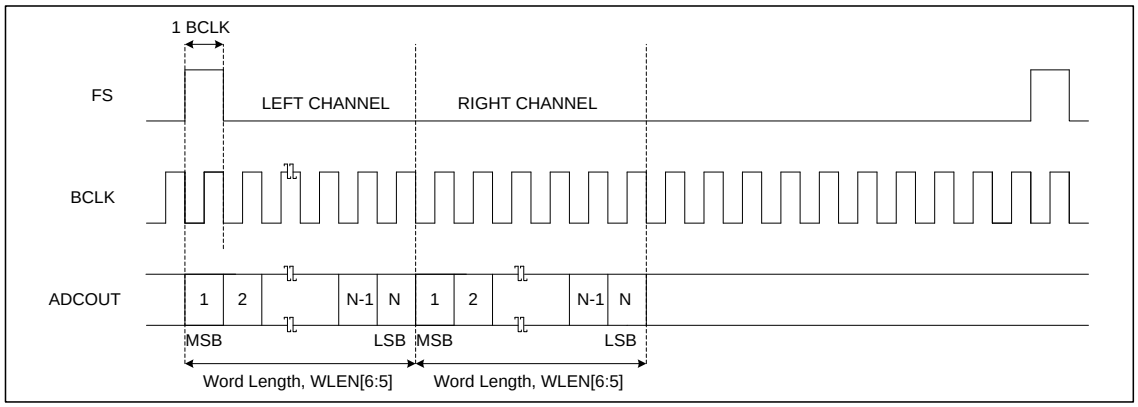


Figure 35: PCM Time Slot Mode (Time slot = 0) (Special mode)

### 6.10.6 Companding

Companding is used in digital communication systems to optimize signal-to-noise ratios with reduced data bit rates, and make use of non-linear algorithms. NAU88C10 supports two different types of companding A-law and µ-law on both transmit and receive sides. A-law algorithm is used in European communication systems and µ-law algorithm is used by North America, Japan, and Australia. This feature is enabled by setting DACCM[4:3] address (0x05) or ADCCM[2:1] address (0x05) register bits. Companding converts 13 bits (µ-law) or 12 bits (A-law) to 8 bits using non-linear quantization. The companded signal is an 8-bit word containing sign (1-bit), exponent (3-bits) and mantissa (4-bits). As recommended by the G.711 standard (all 8-bits are inverted for µ-law, all even data bits are inverted for A-law).

Setting DACCM[1:0] and ADCCM[1:0] PCM interface to use 8-bit word length for data transfer, overriding the word length configuration setting in WLEN[6:5] address 0x04.
DACCM, 0x05[4:3]= 00 is off; 01 is reserved; 10 is for u-law; 11 is for A-law;
ADCM, 0x05[2:1]= 00 is off; 01 is reserved; 10 is for u-law; 11 is for A-law;

| Addr | D8 | D7 | D6 | D5 | D4 | D3 | D2 | D1 | D0 | Default |
|---|---|---|---|---|---|---|---|---|---|---|
| **0x05** | 0 | 0 | 0 | 0 | DACCM[1:0] | | ADCCM[1:0] | | ADDAP | **0x000** |

Table 26: Companding Control

The following equations for data compression (as set out by ITU-T G.711 standard):

**µ-law (where µ=255 for the U.S. and Japan):**

$F(x) = \ln( 1 + \mu|x|) / \ln( 1 + \mu) \qquad -1 \le x \le 1$

**A-law (where A=87.6 for Europe):**

$F(x) = A|x| / ( 1 + \ln A) \qquad \text{for } x \le 1/A$

$F(x) = ( 1 + \ln A|x|) / (1 + \ln A) \qquad \text{for } 1/A \le x \le 1$

## 6.11 Power Supply

This device has been designed to operate reliably using a wide range of power supply conditions and power-on/power-off sequences. There are no special requirements for the sequence or rate at which the various power supply pins change. Any supply can rise or fall at any time without harm to the device. However, pops and clicks may result from some sequences. Optimum handling of hardware and software power-on and power-off sequencing is described in more detail in the Power Up/Down Sequencing section of this document.

### 6.11.1 Power-On Reset

The NAU88C10 does not have an external reset pin. The device reset function is automatically generated internally when power supplies are too low for reliable operation. The internal reset is generated any time that either VDDA or VDDD is lower than is required for reliable maintenance of internal logic conditions. The threshold voltage for VDDA is approximately ~1.52Vdc and the threshold voltage for VDDD is approximately ~0.67Vdc. Note that these are much lower voltages than are required for normal operation of the chip. These values are mentioned here as general guidance as to overall system design.

If either VDDA or VDDD is below its respective threshold voltage, an internal reset condition may be asserted. During this time, all registers and controls are set to the hardware determined initial conditions. Software access during this time will be ignored, and any expected actions from software activity will be invalid.

When both VDDA and VDDD reach a value above their respective thresholds, an internal reset pulse is generated which extends the reset condition for an additional time. The duration of this extended reset time is approximately 50 microseconds, but not longer than 100 microseconds. The reset condition remains asserted during this time. If either VDDA or VDDD at any time becomes lower than its respective threshold voltage, a new reset condition will result. The reset condition will continue until both VDDA and VDDD again higher than their respective thresholds. After VDDA and VDDD are again both greater than their respective threshold voltage, a new reset pulse will be generated, which again will extend the reset condition for not longer than an additional 100 microseconds.

### 6.11.2 Power Related Software Considerations

There is no direct way for software to determine that the device is actively held in a reset condition. If there is a possibility that software could be accessing the device sooner than 100 microseconds after the VDDA and VDDD supplies are valid, the reset condition can be determined indirectly. This is accomplished by writing a value to any register other than register 0x00, with that value being different than the power-on reset initial values. The optimum choice of register for this purpose may be dependent on the system design, and it is recommended the system engineer choose the register and register test bit for this purpose. After writing the value, software will then back the same register. When the register test bit s back as the new value, instead of the power-on reset initial value, software can reliably determine that the reset condition has ended.

Although it is not required, it is strongly recommended that a Software Reset command should be issued after power-on and after the power-on-reset condition is ended. This will help insure reliable operation under every power sequencing condition that could occur.

### 6.11.3 Software Reset

The control registers can be reset to default conditions by writing any value to RST address (0x00), using any of the control interface modes. Writing valid data to any other register disables the reset, but all registers will need to be initiated again appropriate to the operation. See the applications section on powering NAU88C10 up for information on avoiding pops and clicks after a software reset.

### 6.11.4 Power Up/Down Sequencing

Most audio products have issues during power up and power down in the form of pop and click noise. To avoid such issues the NAU88C10 provides four different power supplies VDDA, VDDD and VDDSPK with separated grounds VSSA, VSSD and VSSSPK. The audio CODEC circuitry, the input amplifiers, output amplifiers and drivers, the audio ADC and DAC converters, the PLL, and so on, can be powered up and down individually by software control via 2-Wire interface. The zero cross function should be used when changing the volume in the PGAs to avoid any audible pops or clicks. There are two different modes of operation 5.0V and 3.3V mode. The recommended power-up and power-down sequences for both the modes are outlined as following.

| | Power Up | |
|---|---|---|
| Name | VDDSPK - 3.3V operation | VDDSPK - 5.0V operation |
| Power supplies | Analog – VDDA | Analog – VDDA |
| | Digital – VDDD | Digital – VDDD |
| | Output driver - VDDSPK | Output driver – VDDSPK |
| Mode | SPKBST[2] = 0 | SPKBST[2] = 1 |
| | MOUTBST[3] = 0 | MOUTBST[3] = 1 |
| Power Management | REFIMP[1:0]<br>as required (value of the REFIMP bits based on the startup time which is a combination of the reference impedance and the decoupling capacitor on VREF) | |
| | ABIASEN[3] = 1<br>(enables the internal device bias for all analog blocks) | |
| | IOBUFEN[2] = 1<br>(enables the internal device bias buffer) | |
| Clock divider | CLKIOEN[0] if required | CLKIOEN[0] if required |
| | BCLKSEL[4:2] if required | BCLKSEL[4:2] if required |
| | MCLKSEL[7:5] if required | MCLKSEL[7:5] if required |
| PLL | PLLEN[5] if required | PLLEN[5] if required |
| DAC, ADC | DACEN[0] = 1 | DACEN[0] = 1 |
| | ADCEN[0] = 1 | ADCEN[0] = 1 |
| Mixers | SPKMXEN[2] | SPKMXEN[2] |
| | MOUTMXEN[3] | MOUTMXEN[3] |
| Output stages | MOUTEN[7] | MOUTEN[7] |

| | Power Up | |
|---|---|---|
| Name | VDDSPK - 3.3V operation | VDDSPK - 5.0V operation |
| | NSPKEN[6] | NSPKEN[6] |
| | PSPKEN[5] | PSPKEN[5] |
| Un-mute DAC | DACMT[6] = 0 | DACMT[6] = 0 |

Table 27: Power up sequence

| Name | Power Down Both Cases |
|---|---|
| Mute DAC | DACMT[6] = 1 |
| Power Management | PWRM1 = 0x000 |
| Output stages | MOUTEN[7] |
| | NSPKEN[6] |
| | PSPKEN[5] |
| Power supplies | Analog – VDDA |
| | Digital – VDDD |
| | Output driver – VDDSPK |

Table 28: Power down Sequence

### 6.11.5 Reference Impedance (REFIMP) and Analog Bias

Before the device is functional or any of the individual analog blocks are enabled REFIMP[1:0] address (0x01) and ABIASEN[3] address (0x01) must be set. The REFIMP[1:0] bits control the resistor values ("R" in Figure3) that generates the mid supply reference, VREF. REFIMP[1:0] bits control the power up ramp rate in conjunction with the external decoupling capacitor. A small value of "R" allows fast ramp up of the mid supply reference and a large value of "R" provides higher PSRR of the mid supply reference.

The master analog biasing of the device is enabled by setting ABIASEN[3] address (0x01). This bit has to be set before for the device to function.

### 6.11.6 Power Saving

Saving power is one of the critical features in a semiconductor device specially ones used in the Bluetooth headsets and handheld device. NAU88C10 has two oversampling rates 64x and 128x. The default mode of operation for the DAC and ADC is in 64x oversampling mode which is set by programming DACOS[3] address (0x0A) and ADCOS[3] address (0x0E) respectively to LOW. Power is saved by choosing 64x oversampling rate compared to 128x oversampling rate but slightly degrades the noise performance. To each lowest power possible after the device is functioning set ABIASEN[3] address (0x01) bit to LOW.

| Addr | D8 | D7 | D6 | D5 | D4 | D3 | D2 | D1 | D0 | Default |
|---|---|---|---|---|---|---|---|---|---|---|
| **0x01** | DCBUFEN | 0 | | PLLEN | MICBIASEN | ABIASEN | IOBUFEN | REFIMP | | **0x000** |
| **0x0A** | 0 | 0 | DACMT | DEEMP[1:0] | | DACOS | AUTOMT | 0 | DACPL | **0x000** |
| **0x0E** | MOUTFEN | MOUTFAM | MOUTF[2:0] | | | ADCOS | 0 | 0 | ADCPL | **0x100** |
| **0x3A** | LPIPBST | LPADC | LPSPKD | LPDAC | MICBIASM | TRIMREG[3:2] | | IBADJ[1:0] | | **0x000** |

Table 29: Registers associated with Power Saving

### 6.11.7 Estimated Supply Currents

NAU88C10 can be programmed to enable or disable various analog blocks individually. The table below shows the amount of current consumed by certain analog blocks. Sample rate settings will vary current consumption of the VDDD supply. VDDD consumes approximately 4mA with VDDD = 1.8V and fs = 48kHz. Lower sampling rates will draw lower current.

| BIT | Address | VDDA CURRENT |
|---|---|---|
| REFIMP[1:0] | 0x01 | 10K => 300 uA<br>161k/595k < 100 uA |
| IOBUFEN[2] | | 40uA |
| ABIASEN[3] | | 600uA |
| MICBIASEN[4] | | 500 uA |
| PLLEN[5] | | 2.5mA Clocks Applied |
| DCBUFEN[8] | | 80uA |
| ADCEN[0] | 0x02 | x64 - ADCOS= 0 => 2.0mA<br>x128 – ADCOS= 1 => 3.0mA |
| PGAEN[2] | | 400uA |
| BSTEN[4] | | 200 uA |
| DACEN[0] | 0x03 | X64 (DACOS=0)=>1.6mA<br>x128(DACOS=1)=>1.7mA |
| SPKMXEN[2] | | 400uA |
| MOUTMXEN[3] | | 200uA |
| NSPKEN[6] | | 1mA from VDDSPK + 100uA (VDDA = 5V mode) |
| PSPKEN[5] | | 1mA from VDDSPK + 100uA (VDDA = 5V mode) |
| MOUTEN[7] | | 100uA |

Table 30: VDDA 3.3V Supply Current

## 6.12 Register Description

| Register Address | | Register Names | Register Bits | | | | | | | | | Default |
|---|---|---|---|---|---|---|---|---|---|---|---|---|
| DEC | HEX | | D8 | D7 | D6 | D5 | D4 | D3 | D2 | D1 | D0 | |
| 0 | 0 | Software Reset | RESET (SOFTWARE) | | | | | | | | | 0x000 |
| | | | **POWER MANAGEMENT** | | | | | | | | | |
| 1 | 01 | Power Management 1 | DCBUFEN | 0 | 0 | PLLEN | MICBIASEN | ABIASEN | IOBUFEN | REFIMP | | 0x000 |
| 2 | 02 | Power Management 2 | 0 | 0 | 0 | 0 | BSTEN | 0 | PGAEN | 0 | ADCEN | 0x000 |
| 3 | 03 | Power Management 3 | 0 | MOUTEN | NSPKEN | PSPKEN | 0 | MOUTMXEN | SPKMXEN | 0 | DACEN | 0x000 |
| | | | **AUDIO CONTROL** | | | | | | | | | |
| 4 | 04 | Audio Interface | BCLKP | FSP | WLEN[1:0] | | AIFMT[1:0] | | DACPHS | ADCPHS | 0 | 0x050 |
| 5 | 05 | Companding | 0 | 0 | 0 | 0 | DACCM[1:0] | | ADCCM[1:0] | | ADDAP | 0x000 |
| 6 | 06 | Clock Control 1 | CLKM | MCLKSEL[2:0] | | | BCLKSEL[2:0] | | | 0 | CLKIOEN | 0x140 |
| 7 | 07 | Clock Control 2 | 0 | 0 | 0 | 0 | 0 | SMPLR[2:0] | | | SCLKEN | 0x000 |
| 10 | 0A | DAC CTRL | 0 | 0 | DACMT | DEEMP[1:0] | | DACOS | AUTOMT | 0 | DACPL | 0x000 |
| 11 | 0B | DAC Volume | 0 | DACGAIN | | | | | | | | 0x0FF |
| 14 | 0E | ADC CTRL | HPFEN | HPFAM | HPF[2:0] | | | ADCOS | 0 | 0 | ADCPL | 0x100 |
| 15 | 0F | ADC Volume | 0 | ADCGAIN | | | | | | | | 0x0FF |
| | | | EQUALISER | | | | | | | | | |
| 18 | 0x12 | EQ1-Low Cutoff | EQM | 0 | EQ1CF[1:0] | | EQ1GC[4:0] | | | | | 0x12C |
| 19 | 0x13 | EQ2-Peak 1 | EQ2BW | 0 | EQ2CF[1:0] | | EQ2GC[4:0] | | | | | 0x02C |
| 20 | 0x14 | EQ3-Peak 2 | EQ3BW | 0 | EQ3CF[1:0] | | EQ3GC[4:0] | | | | | 0x02C |
| 21 | 0x15 | EQ4-Peak3 | EQ4BW | 0 | EQ4CF[1:0] | | EQ4GC[4:0] | | | | | 0x02C |
| 22 | 0x16 | EQ5-High Cutoff | 0 | 0 | EQ5CF[1:0] | | EQ5GC[4:0] | | | | | 0x02C |
| | | | **DIGITAL TO ANALOG (DAC) LIMITER** | | | | | | | | | |
| 24 | 18 | DAC Limiter 1 | DACLIMEN | DACLIMDCY[3:0] | | | | DACLIMATK[3:0] | | | | 0x032 |
| 25 | 19 | DAC Limiter 2 | 0 | 0 | DACLIMTHL[2:0] | | | DACLIMBST[3:0] | | | | 0x000 |
| | | | **NOTCH FILTER** | | | | | | | | | |
| 27 | 1B | Notch Filter High | NFCU | NFCEN | NFCA0[13:7] | | | | | | | 0x000 |
| 28 | 1C | Notch Filter Low | NFCU | 0 | NFCA0[6:0] | | | | | | | 0x000 |
| 29 | 1D | Notch Filter High | NFCU | 0 | NFCA1[13:7] | | | | | | | 0x000 |
| 30 | 1E | Notch Filter Low | NFCU | 0 | NFCA1[6:0] | | | | | | | 0x000 |
| | | | **ALC CONTROL** | | | | | | | | | |
| 32 | 20 | ALC CTRL 1 | ALCEN | 0 | 0 | ALCMXGAIN[2:0] | | | ALCMNGAIN[2:0] | | | 0x038 |
| 33 | 21 | ALC CTRL 2 | ALCZC | ALCHT[3:0] | | | | ALCSL[3:0] | | | | 0x00B |
| 34 | 22 | ALC CTRL 3 | ALCM | ALCDCY[3:0] | | | | ALCATK[3:0] | | | | 0x032 |
| 35 | 23 | Noise Gate | 0 | 0 | 0 | 0 | 0 | ALCNEN | ALCNTH[2:0] | | | 0x000 |
| | | | **PLL CONTROL** | | | | | | | | | |
| 36 | 24 | PLL N CTRL | 0 | 0 | 0 | 0 | PLLMCLK | PLLN[3:0] | | | | 0x008 |
| 37 | 25 | PLL K 1 | 0 | 0 | 0 | PLLK[23:18] | | | | | | 0x00C |
| 38 | 26 | PLL K 2 | PLLK[17:9] | | | | | | | | | 0x093 |

| Register Address | | Register Names | Register Bits | | | | | | | | | Default |
|---|---|---|---|---|---|---|---|---|---|---|---|---|
| DEC | HEX | | D8 | D7 | D6 | D5 | D4 | D3 | D2 | D1 | D0 | |
| 39 | 27 | PLL K 3 | PLLK[8:0] | | | | | | | | | 0x0E9 |
| | | | **INPUT, OUTPUT & MIXER CONTROL** | | | | | | | | | |
| 40 | 28 | Attenuation CTRL | 0 | 0 | 0 | 0 | 0 | 0 | MOUTATT | SPKATT | 0 | 0x000 |
| 44 | 2C | Input CTRL | MICBIASV | | 0 | 0 | 0 | 0 | 0 | NMICPGA | PMICPGA | 0x003 |
| 45 | 2D | PGA Gain | 0 | PGAZC | PGAMT | PGAGAIN[5:0] | | | | | | 0x010 |
| 47 | 2F | ADC Boost | PGABST | 0 | PMICBSTGAIN | | | 0 | 0 | 0 | 0 | 0x100 |
| 49 | 31 | Output CTRL | 0 | 0 | 0 | 0 | 0 | MOUTBST | SPKBST | TSEN | AOUTIMP | 0x002 |
| 50 | 32 | Mixer CTRL | 0 | 0 | 0 | 0 | 0 | 0 | 0 | BYPSPK | DACSPK | 0x001 |
| 54 | 36 | SPKOUT Volume | 0 | SPKZC | SPKMT | SPKGAIN[5:0] | | | | | | 0x039 |
| 56 | 38 | MONO Mixer Control | 0 | 0 | MOUTMT | 0 | 0 | 0 | 0 | BYPMOUT | DACMOUT | 0x001 |
| | | | **LOW POWER CONTROL** | | | | | | | | | |
| 58 | 3A | Power Management 4 | LPIPBST | LPADC | LPSPKD | LPDAC | MICBIASM | TRIMREG | | IBADJ | | 0x000 |
| | | | **PCM TIME SLOT & ADCOUT IMPEDANCE OPTION CONTROL** | | | | | | | | | |
| 59 | 3B | Time Slot | TSLOT[8:0] | | | | | | | | | 0x000 |
| 60 | 3C | ADCOUT Drive | PCMTSEN | TRI | PCM8BIT | PUDOEN | PUDPE | PUDPS | LOUTR | PCMB | TSLOT[9:8] | 0x020 |
| | | | **REGISTER ID** | | | | | | | | | |
| 62 | 3E | Silicon Revision | 0 | 1 | 1 | 1 | 0 | 1 | 1 | 1 | 0 | 0x0EE |
| 63 | 3F | 2-Wire ID | 0 | 0 | 0 | 0 | 1 | 1 | 0 | 1 | 0 | 0x01A |
| 64 | 40 | Additional ID | 0 | 1 | 1 | 0 | 0 | 1 | 0 | 1 | 0 | 0x0CA |
| 65 | 41 | Reserved | 1 | 0 | 0 | 1 | 0 | 0 | 1 | 0 | 0 | 0x124 |
| 69 | 45 | High Voltage CTRL | 0 | 0 | 0 | 0 | MOUTMT | 0 | HVOPU | 0 | HVOP | 0x001 |
| 70 | 46 | ALC Enhancements 1 | ALCTBLSEL | ALCPKSEL | ALCNGSEL | ALCGAINL ( ONLY) | | | | | | 0x000 |
| 71 | 47 | ALC Enhancements 2 | PKLIMEN | 0 | 0 | 1 | 1 | 1 | 0 | 0 | 1 | 0x039 |
| 73 | 49 | Additional IF CTRL | 0 | FSERRVAL[1:0] | | FSERFLSH | FSERRENA | NFDLY | DACINMT | PLLLOCKP | DACOS256 | 0x000 |
| 75 | 4B | Power/Tie-off CTRL | 0 | LPSPKA | 0 | 0 | 0 | 0 | MANVREFH | MANVREFM | MANVREFL | 0x000 |
| 76 | 4C | AGC P2P Detector | P2PDET ( ONLY) | | | | | | | | | 0x000 |
| 77 | 4D | AGC Peak Detector | PDET ( ONLY) | | | | | | | | | 0x000 |
| 78 | 4E | Control and Status | 0 | 0 | AMTCTRL | HVDET | NSGATE | AMUTE | DMUTE | 0 | FTDEC | 0x000 |
| 79 | 4F | Output tie-off CTRL | MANOUTEN | SBUFH | SBUFL | SNSPK | SPSPK | SMOUT | 0 | 0 | 0 | 0x000 |

## 6.13 Software Reset

| Addr | D8 | D7 | D6 | D5 | D4 | D3 | D2 | D1 | D0 | Default |
|---|---|---|---|---|---|---|---|---|---|---|
| **0x00** | RESET (SOFTWARE) | | | | | | | | | **0x000** |

This is device Reset register. Performing a write instruction to this register with any data will reset all the bits in the register map to default.

## 6.14 Power Management Registers

### 6.14.1 Power Management 1

| Addr | D8 | D7 | D6 | D5 | D4 | D3 | D2 | D1 | D0 | Default |
|---|---|---|---|---|---|---|---|---|---|---|
| **0x01** | DCBUFEN | 0 | 0 | PLLEN | MICBIASEN | ABIASEN | IOBUFEN | REFIMP[1:0] | | **0x000** |

| Name | Buffer for DC level shifting Enable | PLL enable | Microphone Bias Enable | Analogue amplifier bias control | Unused input/output tie off buffer enable |
|---|---|---|---|---|---|
| **Bit** | **DCBUFEN[8]** | **PLLEN[5]** | **MICBIASEN[4]** | **ABIASEN[3]** | **IOBUFEN[2]** |
| 0 | Disable | Disable | Disable | Disable | Disable |
| 1 | Enable (required for 1.5x gain) | Enable | Enable | Enable | Enable |

The DCBUFEN[8] address (0x01) is a dedicated buffer for DC level shifting output stages when in 1.5x gain boost configuration. There are three different reference impedance selections to choose from as follows:

| VREF REFERENCE IMPEDANCE SELECTION (“R” refers to “R” as shown in Figure3) | | |
|---|---|---|
| **REFIMP[1]** | **REFIMP[0]** | **Mode** |
| 0 | 0 | Disable |
| 0 | 1 | R = 80 kΩ |
| 1 | 0 | R = 300 kΩ |
| 1 | 1 | R = 3 kΩ |

### 6.14.2 Power Management 2

| Addr | D8 | D7 | D6 | D5 | D4 | D3 | D2 | D1 | D0 | Default |
|---|---|---|---|---|---|---|---|---|---|---|
| **0x02** | 0 | 0 | 0 | 0 | BSTEN | 0 | PGAEN | 0 | ADCEN | **0x000** |

| Name | Input Boost Enable | MIC(+/-) PGA Enable | ADC Enable |
|---|---|---|---|
| **Bit** | **BSTEN[4]** | **PGAEN[2]** | **ADCEN[0]** |
| 0 | Stage Disable | Disable | Disable |
| 1 | Stage Enable | Enable | Enable |

### 6.14.3 Power Management 3

| Addr | D8 | D7 | D6 | D5 | D4 | D3 | D2 | D1 | D0 | Default |
|---|---|---|---|---|---|---|---|---|---|---|
| **0x03** | 0 | MOUTEN | NSPKEN | PSPKEN | 0 | MOUTMXEN | SPKMXEN | 0 | DACEN | **0x000** |

| Name | MOUT Enable | SPKOUT- Enable | SPKOUT+ Enable | MONO Mixer Enable | Speaker Mixer Enable | DAC Enable |
|---|---|---|---|---|---|---|
| **Bit** | **MOUTEN[7]** | **NSPKEN[6]** | **PSPKEN[5]** | **MOUTMXEN[3]** | **SPKMXEN[2]** | **DACEN[0]** |
| 0 | Disable | Disable | Disable | Disable | Disable | Disable |
| 1 | Enable | Enable | Enable | Enable | Enable | Enable |

## 6.15 Audio Control Registers

### 6.15.1 Audio Interface Control

| Addr | D8 | D7 | D6 | D5 | D4 | D3 | D2 | D1 | D0 | Default |
|---|---|---|---|---|---|---|---|---|---|---|
| **0x04** | BCLKP | FSP | WLEN[1:0] | | AIFMT[1:0] | | DACPHS | ADCPHS | 0 | **0x050** |

The following table explains the PCM control register bits.

| Name | BCLK Polarity | Frame Clock Polarity | DAC Data 'right' or 'left' phases of FRAME clock | ADC Data 'right' or 'left' phases of FRAME clock |
|---|---|---|---|---|
| **Bit** | **BCLKP[8]** | **FSP[7]** | **DACPHS[2]** | **ADCPHS[1]** |
| 0 | Normal | Normal | DAC data appear in 'left' phase of FRAME | ADC data appear in 'left' phase of FRAME |
| 1 | Inverted | Inverted | DAC data appears in 'right' phase of FRAME | ADC data appears in 'right' phase of FRAME |

There are three different CODEC modes to choose from as follows:

| Word Length Selection | | |
|---|---|---|
| **WLEN[6]** | **WLEN[5]** | **Bits** |
| 0 | 0 | 16 |
| 0 | 1 | 20 |
| 1 | 0 | 24 |
| 1 | 1 | 32 |

| Audio Data Format Select | | |
|---|---|---|
| **AIFMT[4]** | **AIFMT[3]** | **Format** |
| 0 | 0 | Right Justified |
| 0 | 1 | Left Justified |
| 1 | 0 | $I^2S$ |
| 1 | 1 | PCM A |

### 6.15.2 Audio Interface Companding Control

| Addr | D8 | D7 | D6 | D5 | D4 | D3 | D2 | D1 | D0 | Default |
|---|---|---|---|---|---|---|---|---|---|---|
| **0x05** | 0 | 0 | 0 | 0 | DACCM[1:0] | | ADCCM[1:0] | | ADDAP | **0x000** |

The NAU88C10 provides a Digital Loopback ADDAP[0] address (0x05) bit. Setting ADDAP[0] bit to HIGH enables the loopback so that the ADC data can be fed directly into the DAC input.

| DAC Companding Selection | | |
|---|---|---|
| **DACCM[4]** | **DACCM[3]** | **Mode** |
| 0 | 0 | Disabled |
| 0 | 1 | Reserved |
| 1 | 0 | µ-Law |
| 1 | 1 | A-Law |

| ADC Companding Select | | |
|---|---|---|
| **ADCCM[2]** | **ADCCM[1]** | **Mode** |
| 0 | 0 | Disabled |
| 0 | 1 | Reserved |
| 1 | 0 | µ-Law |
| 1 | 1 | A-Law |

### 6.15.3 Clock Control Register

| Addr | D8 | D7 | D6 | D5 | D4 | D3 | D2 | D1 | D0 | Default |
|---|---|---|---|---|---|---|---|---|---|---|
| **0x06** | CLKM | MCLKSEL[2:0] | | | BCLKSEL[2:0] | | | 0 | CLKIOEN | **0x140** |

| Master Clock Selection | | | |
|---|---|---|---|
| **MCLKSEL [7]** | **MCLKSEL [6]** | **MCLKSEL [5]** | **Mode** |
| 0 | 0 | 0 | ÷ 1 |
| 0 | 0 | 1 | ÷ 1.5 |
| 0 | 1 | 0 | ÷ 2 |
| 0 | 1 | 1 | ÷ 3 |
| 1 | 0 | 0 | ÷ 4 |
| 1 | 0 | 1 | ÷ 6 |
| 1 | 1 | 0 | ÷ 8 |
| 1 | 1 | 1 | ÷ 12 |

| Bit Clock Select | | | |
|---|---|---|---|
| **BCLKSEL [4]** | **BCLKSEL [3]** | **BCLKSEL [2]** | **Mode** |
| 0 | 0 | 0 | ÷ 1 (BCLK=MCLK) |
| 0 | 0 | 1 | ÷ 2 (BCLK=MCLK/2) |
| 0 | 1 | 0 | ÷ 4 |
| 0 | 1 | 1 | ÷ 8 |
| 1 | 0 | 0 | ÷ 16 |
| 1 | 0 | 1 | ÷ 32 |
| 1 | 1 | 0 | Reserved |
| 1 | 1 | 1 | Reserved |

| Name | Source of Internal Clock | FRAME and BCLK |
|---|---|---|
| **Bit** | **CLKM[8]** | **CLKIOEN[0]** |
| 0 | MCLK (PLL Bypassed) | Slave Mode |
| 1 | MCLK (PLL Output) | Master Mode |

### 6.15.4 Audio Sample Rate Control Register

| Addr | D8 | D7 | D6 | D5 | D4 | D3 | D2 | D1 | D0 | Default |
|---|---|---|---|---|---|---|---|---|---|---|
| **0x07** | 0 | 0 | 0 | 0 | 0 | SMPLR[2:0] | | | SCLKEN | **0x000** |

The Audio sample rate configures only the coefficients for the internal digital filters to match the actual sample rate. It does not in any way actually set or change the ADC or DAC audio sample rate.

| Sample Rate Selection | | | |
|---|---|---|---|
| **SMPLR[3]** | **SMPLR[2]** | **SMPLR[1]** | **Mode (Hz)** |
| 0 | 0 | 0 | 48 k |
| 0 | 0 | 1 | 32 k |
| 0 | 1 | 0 | 24 k |
| 0 | 1 | 1 | 16 k |
| 1 | 0 | 0 | 12 k |
| 1 | 0 | 1 | 8 k |
| 1 | 1 | 0 | Reserved |
| 1 | 1 | 1 | Reserved |

NAU88C10 provides a slow clock to be used for the zero cross timeout.

| **Bit** | Slow Clock Enable |
|---|---|
| | **SCLKEN[0]** |
| 0 | MCLK |
| 1 | PLL Output (Period $2^{21}$ * MCLK) |

### 6.15.5 DAC Control Register

| Addr | D8 | D7 | D6 | D5 | D4 | D3 | D2 | D1 | D0 | Default |
|---|---|---|---|---|---|---|---|---|---|---|
| **0x0A** | 0 | 0 | DACMT | DEEMP[1:0] | | DACOS | AUTOMT | 0 | DACPL | **0x000** |

| Name | Soft Mute Enable | Over Sample Rate | Auto Mute enable | Polarity Invert |
|---|---|---|---|---|
| **Bit** | **DACMT[6]** | **DACOS[3]** | **AUTOMT[2]** | **DACPL[0]** |
| 0 | Disable | 64x (Lowest power) | Disable | Normal |
| 1 | Enable | 128x (best SNR) | Enable | DAC Output Inverted |

| De-emphasis | | |
|---|---|---|
| **DEEMP[5]** | **DEEMP[4]** | **Mode** |
| 0 | 0 | No de-emphasis |
| 0 | 1 | 32kHz sample rate |
| 1 | 0 | 44.1kHz sample rate |
| 1 | 1 | 48kHz sample rate |

### 6.15.6 DAC Gain Control Register

| Addr | D8 | D7 | D6 | D5 | D4 | D3 | D2 | D1 | D0 | Default |
|---|---|---|---|---|---|---|---|---|---|---|
| **0x0B** | 0 | DACGAIN | | | | | | | | **0x0FF** |

| DAC Gain | | | | | | | | |
|---|---|---|---|---|---|---|---|---|
| **DACGAIN[7:0]** | | | | | | | | **Mode (dB)** |
| **B7** | **B6** | **B5** | **B4** | **B3** | **B2** | **B1** | **B0** | |
| 0 | 0 | 0 | 0 | 0 | 0 | 0 | 0 | Digital Mute |
| 0 | 0 | 0 | 0 | 0 | 0 | 0 | 1 | -127.0 |
| 0 | 0 | 0 | 0 | 0 | 0 | 1 | 0 | -126.5 |
| 0 | 0 | 0 | 0 | 0 | 0 | 1 | 1 | -126.0 |
| DAC Gain Range -127dB to 0dB @ 0.5 increments | | | | | | | | |
| 1 | 1 | 1 | 1 | 1 | 1 | 0 | 0 | -1.5 |
| 1 | 1 | 1 | 1 | 1 | 1 | 0 | 1 | -1.0 |
| 1 | 1 | 1 | 1 | 1 | 1 | 1 | 0 | -0.5 |
| 1 | 1 | 1 | 1 | 1 | 1 | 1 | 1 | 0.0 |

### 6.15.7 ADC Control Register

| Addr | D8 | D7 | D6 | D5 | D4 | D3 | D2 | D1 | D0 | Default |
|---|---|---|---|---|---|---|---|---|---|---|
| **0x0E** | HPFEN | HPFAM | HPF[2:0] | | | ADCOS | 0 | 0 | ADCPL | **0x100** |

| Name | High Pass Filter Enable | Audio or Application Mode | Over Sample Rate | ADC Polarity |
|---|---|---|---|---|
| **Bit** | **HPFEN[8]** | **HPFAM[7]** | **ADCOS[3]** | **ADCPL[0]** |
| 0 | Disable | Audio (1st order, fc ~ 3.7 Hz) | 64x (Lowest power) | Normal |
| 1 | Enable | Application (2nd order, fc = HPF) | 128x (best SNR) | Inverted |

| High Pass Filter | | | fs ( kHz) | | | | | | | | |
|---|---|---|---|---|---|---|---|---|---|---|---|
| **HPF[6]** | **HPF[5]** | **HPF[4]** | SMPLR=101 SMPLR=100 | | | SMPLR=011 SMPLR=010 | | | SMPLR=001 SMPLR=000 | | |
| **B2** | **B1** | **B0** | **8** | **11.025** | **12** | **16** | **22.05** | **24** | **32** | **44.1** | **48** |
| 0 | 0 | 0 | 82 | 113 | 122 | 82 | 113 | 122 | 82 | 113 | 122 |
| 0 | 0 | 1 | 102 | 141 | 153 | 102 | 141 | 153 | 102 | 141 | 153 |
| 0 | 1 | 0 | 131 | 180 | 156 | 131 | 180 | 156 | 131 | 180 | 156 |
| 0 | 1 | 1 | 163 | 225 | 245 | 163 | 225 | 245 | 163 | 225 | 245 |
| 1 | 0 | 0 | 204 | 281 | 306 | 204 | 281 | 306 | 204 | 281 | 306 |
| 1 | 0 | 1 | 261 | 360 | 392 | 261 | 360 | 392 | 261 | 360 | 392 |
| 1 | 1 | 0 | 327 | 450 | 490 | 327 | 450 | 490 | 327 | 450 | 490 |
| 1 | 1 | 1 | 408 | 563 | 612 | 408 | 563 | 612 | 408 | 563 | 612 |

### 6.15.8 ADC Gain Control Register

| Addr | D8 | D7 | D6 | D5 | D4 | D3 | D2 | D1 | D0 | Default |
|---|---|---|---|---|---|---|---|---|---|---|
| **0x0F** | 0 | ADCGAIN | | | | | | | | **0x0FF** |

| ADC Gain | | | | | | | | |
|---|---|---|---|---|---|---|---|---|
| **ADCGAIN[7:0]** | | | | | | | | **Mode (dB)** |
| **B7** | **B6** | **B5** | **B4** | **B3** | **B2** | **B1** | **B0** | |
| 0 | 0 | 0 | 0 | 0 | 0 | 0 | 0 | Unused |
| 0 | 0 | 0 | 0 | 0 | 0 | 0 | 1 | -127.0 |
| 0 | 0 | 0 | 0 | 0 | 0 | 1 | 0 | -126.5 |
| 0 | 0 | 0 | 0 | 0 | 0 | 1 | 1 | -126.0 |
| ADC Gain Range -127dB to 0dB @ 0.5 increments | | | | | | | | |
| 1 | 1 | 1 | 1 | 1 | 1 | 0 | 0 | -1.5 |
| 1 | 1 | 1 | 1 | 1 | 1 | 0 | 1 | -1.0 |
| 1 | 1 | 1 | 1 | 1 | 1 | 1 | 0 | -0.5 |
| 1 | 1 | 1 | 1 | 1 | 1 | 1 | 1 | 0.0 |

## 6.16 5-Band Equalizer Control Registers

| Address | D8 | D7 | D6 | D5 | D4 | D3 | D2 | D1 | D0 | Default |
|---|---|---|---|---|---|---|---|---|---|---|
| **0x12** | EQM | 0 | EQ1CF[1:0] | | EQ1GC[4:0] | | | | | **0x12C** |
| **0x13** | EQ2BW | 0 | EQ2CF[1:0] | | EQ2GC[4:0] | | | | | **0x02C** |
| **0x14** | EQ3BW | 0 | EQ3CF[1:0] | | EQ3GC[4:0] | | | | | **0x 02C** |
| **0x15** | EQ4BW | 0 | EQ4CF[1:0] | | EQ4GC[4:0] | | | | | **0x02C** |
| **0x16** | 0 | 0 | EQ5CF[1:0] | | EQ5GC[4:0] | | | | | **0x02C** |

| Equalizer Gain | | | | | |
|---|---|---|---|---|---|
| **EQ1GC, EQ2GC, EQ3GC, EQ4GC, EQ5GC [4:0]** | | | | | **Mode (dB)** |
| **B4** | **B3** | **B2** | **B1** | **B0** | |
| 0 | 0 | 0 | 0 | 0 | +12 |
| 0 | 0 | 0 | 0 | 1 | +11 |
| ::: | ::: | ::: | ::: | ::: | ::: |
| 0 | 1 | 0 | 1 | 1 | +1 |
| 0 | 1 | 1 | 0 | 0 | 0 |
| 0 | 1 | 1 | 0 | 1 | -1 |
| **Equalizer Gain Range -12dB to +12dB @ 1.0 increment** | | | | | |
| ::: | ::: | ::: | ::: | ::: | ::: |
| 1 | 0 | 1 | 1 | 1 | -11 |
| 1 | 1 | 0 | 0 | 0 | -12 |
| 1 | 1 | 0 | 0 | 1 | Reserved |
| To | | | | | |
| 1 | 1 | 1 | 1 | 1 | |

| | | Center Frequencies | | |
|---|---|---|---|---|
| **B1** | **B0** | **EQ2CF[6:5]** | **EQ3CF[6:5]** | **EQ4CF[6:5]** |
| 0 | 0 | 230 | 650 | 1.8 k |
| 0 | 1 | 300 | 850 | 2.4 k |
| 1 | 0 | 385 | 1.1 k | 3.2 k |
| 1 | 1 | 500 | 1.4 k | 4.1 k |

| | | Cut-off Frequencies | |
|---|---|---|---|
| **B1** | **B0** | **EQ1CF[6:5]** | **EQ5CF[6:5]** |
| 0 | 0 | 80 | 5.3 k |
| 0 | 1 | 105 | 6.9 k |
| 1 | 0 | 135 | 9.0 k |
| 1 | 1 | 175 | 11.7 k |

| **Bit** | Bandwidth Control | Equalizer Path |
|---|---|---|
| | **EQ2BW – EQ4BW** | **EQM[8]** |
| 0 | Narrow bandwidth | ADC path |
| 1 | Wide bandwidth | DAC path |

## 6.17 Digital To Analog Converter (DAC) Limiter Registers

| Addr | D8 | D7 | D6 | D5 | D4 | D3 | D2 | D1 | D0 | Default |
|---|---|---|---|---|---|---|---|---|---|---|
| **0x18** | DACLIMEN | DACLIMDCY[3:0] | | | | DACLIMATK[3:0] | | | | **0x032** |
| **0x19** | 0 | 0 | DACLIMTHL[2:0] | | | DACLIMBST[3:0] | | | | **0x000** |

| DAC Limiter Decay time (per 6dB gain change) for 44.1 kHz sampling. Note that these will scale with sample rate | | | | |
|---|---|---|---|---|
| **DACLIMDCY[3:0]** | | | | |
| **B3** | **B2** | **B1** | **B0** | **Decay Time** |
| 0 | 0 | 0 | 0 | 544.0 us |
| 0 | 0 | 0 | 1 | 1.1 ms |
| 0 | 0 | 1 | 0 | 2.2 ms |
| 0 | 0 | 1 | 1 | 4.4 ms |
| 0 | 1 | 0 | 0 | 8.7 ms |
| 0 | 1 | 0 | 1 | 17.4 ms |
| 0 | 1 | 1 | 0 | 35.0 ms |
| 0 | 1 | 1 | 1 | 69.6 ms |
| 1 | 0 | 0 | 0 | 139.0 ms |
| 1 | 0 | 0 | 1 | 278.5 ms |
| 1 | 0 | 1 | 0 | 557.0 ms |
| 1 | 0 | 1 | 1 | 1.1 s |
| To | | | | |
| 1 | 1 | 1 | 1 | |

| DAC Limiter Attack time (per 6dB gain change) for 44.1 kHz sampling. Note that these will scale with sample rate | | | | |
|---|---|---|---|---|
| **DACLIMATK[3:0]** | | | | |
| **B3** | **B2** | **B1** | **B0** | **Attack Time** |
| 0 | 0 | 0 | 0 | 68 us |
| 0 | 0 | 0 | 1 | 136 us |
| 0 | 0 | 1 | 0 | 272 us |
| 0 | 0 | 1 | 1 | 544 us |
| 0 | 1 | 0 | 0 | 1.1 ms |
| 0 | 1 | 0 | 1 | 2.2 ms |
| 0 | 1 | 1 | 0 | 4.4 ms |
| 0 | 1 | 1 | 1 | 8.7 ms |
| 1 | 0 | 0 | 0 | 17.4 ms |
| 1 | 0 | 0 | 1 | 35 ms |
| 1 | 0 | 1 | 0 | 69.6 ms |
| 1 | 0 | 1 | 1 | 139 ms |
| To | | | | |
| 1 | 1 | 1 | 1 | |

| DAC Limiter Programmable signal threshold level (determines level at which the limiter starts to operate) | | | |
|---|---|---|---|
| **DACLIMTHL[3:0]** | | | **Threshold (dB)** |
| **B2** | **B1** | **B0** | |
| 0 | 0 | 0 | -1 |
| 0 | 0 | 1 | -2 |
| 0 | 1 | 0 | -3 |
| 0 | 1 | 1 | -4 |
| 1 | 0 | 0 | -5 |
| 1 | 0 | 1 | -6 |
| To | | | |
| 1 | 1 | 1 | |

| DAC Digital Limiter | |
|---|---|
| **Bit** | **DACLIMEN[8]** |
| 0 | Disabled |
| 1 | Enabled |

| DAC Limiter volume Boost (can be used as a stand alone volume Boost when DACLIMEN=0) | | | | |
|---|---|---|---|---|
| **DACLIMBST[3:0]** | | | | **Boost (dB)** |
| **B3** | **B2** | **B1** | **B0** | |
| 0 | 0 | 0 | 0 | 0 |
| 0 | 0 | 0 | 1 | +1 |
| 0 | 0 | 1 | 0 | +2 |
| 0 | 0 | 1 | 1 | +3 |
| 0 | 1 | 0 | 0 | +4 |
| 0 | 1 | 0 | 1 | +5 |
| 0 | 1 | 1 | 0 | +6 |
| 0 | 1 | 1 | 1 | +7 |
| 1 | 0 | 0 | 0 | +8 |
| 1 | 0 | 0 | 1 | +9 |
| 1 | 0 | 1 | 0 | +10 |
| 1 | 0 | 1 | 1 | +11 |
| 1 | 1 | 0 | 0 | +12 |
| 1 | 1 | 0 | 1 | Reserved |
| To | | | | |
| 1 | 1 | 1 | 1 | |

## 6.18 Notch Filter Registers

| Addr | D8 | D7 | D6 | D5 | D4 | D3 | D2 | D1 | D0 | Default |
|---|---|---|---|---|---|---|---|---|---|---|
| **0x1B** | NFCU | NFCEN | NFCA0[13:7] | | | | | | | **0x000** |
| **0x1C** | NFCU | 0 | NFCA0[6:0] | | | | | | | **0x000** |
| **0x1D** | NFCU | 0 | NFCA1[13:7] | | | | | | | **0x000** |
| **0x1E** | NFCU | 0 | NFCA1[6:0] | | | | | | | **0x000** |

The Notch Filter is enabled by setting NFCEN[7] address (0x1B) bit to HIGH. The coefficients, $A_0$ and $A_1$, should be converted to 2's complement numbers to determine the register values. $A_0$ and $A_1$ are represented by the register bits NFCA0[13:0] and NFCA1[13:0]. Since there are four register of coefficients, a Notch Filter Update bit is provided so that the coefficients can be updated simultaneously. NFCU[8] is provided in all registers of the Notch Filter coefficients but only one bit needs to be toggled for LOW – HIGH – LOW for an update. If any of the NFCU[8] bits are left HIGH then the Notch Filter coefficients will continuously update. An example of how to calculate is provided in the Notch Filter section.

| Name | $A_0$ | $A_1$ | Notation | Register Value (DEC) |
|---|---|---|---|---|
| **Coefficient** | $\frac{1-\tan\left(\frac{2\pi f_b}{2f_s}\right)}{1+\tan\left(\frac{2\pi f_b}{2f_s}\right)}$ | $-\left(1+A_0\right)x\cos\left(\frac{2\pi f_c}{f_s}\right)$ | $f_c$ = center frequency (Hz)<br>$f_b$ = -3dB bandwidth (Hz)<br>fs = sample frequency (Hz) | NFCA0 = $-A_0 \times 2^{13}$<br>NFCA1 = $-A_1 \times 2^{12}$<br>(then convert to 2's complement) |

## 6.19 Automatic Level Control Register

### 6.19.1 ALC1 Register

| Addr | D8 | D7 | D6 | D5 | D4 | D3 | D2 | D1 | D0 | Default |
|---|---|---|---|---|---|---|---|---|---|---|
| **0x20** | ALCEN | 0 | 0 | ALCMXGAIN[2:0] | | | ALCMNGAIN[2:0] | | | **0x038** |

| Maximum Gain | | | |
|---|---|---|---|
| **ALCMXGAIN[2:0]** | | | **Mode** |
| **B2** | **B1** | **B0** | |
| 0 | 0 | 0 | -6.75dB |
| 0 | 0 | 1 | -0.75dB |
| 0 | 1 | 0 | +5.25dB |
| 0 | 1 | 1 | +11.25dB |
| 1 | 0 | 0 | +17.25dB |
| 1 | 0 | 1 | +23.25dB |
| 1 | 1 | 0 | +29.25dB |
| 1 | 1 | 1 | +35.25dB |

| Minimum Gain | | | |
|---|---|---|---|
| **ALCMNGAIN[2:0]** | | | **Mode** |
| **B2** | **B1** | **B0** | |
| 0 | 0 | 0 | -12dB |
| 0 | 0 | 1 | -6dB |
| 0 | 1 | 0 | 0dB |
| 0 | 1 | 1 | +6dB |
| 1 | 0 | 0 | +12dB |
| 1 | 0 | 1 | +18dB |
| 1 | 1 | 0 | +24dB |
| 1 | 1 | 1 | +30dB |

| Name | ALC Enable |
|---|---|
| **Bit** | **ALCEN[8]** |
| 0 | Disabled (PGA gain set by PGAGAIN register bits) |
| 1 | Enabled (ALC controls PGA gain) |

### 6.19.2 ALC3 Register

| Addr | D8 | D7 | D6 | D5 | D4 | D3 | D2 | D1 | D0 | Default |
|---|---|---|---|---|---|---|---|---|---|---|
| **0x22** | ALCM | ALCDCY[3:0] | | | | ALCATK[3:0] | | | | **0x032** |

| ALC DECAY TIME | | | | | | | | | |
|---|---|---|---|---|---|---|---|---|---|
| ALCDCY[3:0] | | | | ALCM = 0 (Normal Mode) | | | ALCM = 1 (Limiter Mode) | | |
| B3 | B2 | B1 | B0 | Per Step | Per 6dB | 90% of Range | Per Step | Per 6dB | 90% of Range |
| 0 | 0 | 0 | 0 | 500 us | 4 ms | 28.78 ms | 125 us | 1 ms | 7.2 ms |
| 0 | 0 | 0 | 1 | 1 ms | 8 ms | 57.56 ms | 250 us | 2 ms | 14.4 ms |
| 0 | 0 | 1 | 0 | 2 ms | 16 ms | 115 ms | 500 us | 4 ms | 28.8 ms |
| Time doubles with every increment | | | | | | | | | |
| 1 | 0 | 0 | 0 | 128 ms | 1 s | 7.37 s | 32 ms | 256 ms | 1.8 s |
| 1 | 0 | 0 | 1 | 256 ms | 2 s | 14.7 s | 64 ms | 512 ms | 3.7 s |
| 1 | 0 | 1 | 0 | 512 ms | 4 s | 29.5 s | 128 ms | 1 s | 7.37 s |
| To | | | | | | | | | |
| 1 | 1 | 1 | 1 | | | | | | |

| ALC ATTACK TIME | | | | | | | | | |
|---|---|---|---|---|---|---|---|---|---|
| ALCATK[3:0] | | | | ALCM = 0 (Normal Mode) | | | ALCM = 1 (Limiter Mode) | | |
| B3 | B2 | B1 | B0 | Per Step | Per 6dB | 90% of Range | Per Step | Per 6dB | 90% of Range |
| 0 | 0 | 0 | 0 | 125 us | 1 ms | 7.2 ms | 31 us | 248 us | 1.8 ms |
| 0 | 0 | 0 | 1 | 250 us | 2 ms | 14.4 ms | 62 us | 496 us | 3.6 ms |
| 0 | 0 | 1 | 0 | 500 us | 4 ms | 28.85 ms | 124 us | 992 us | 7.15 ms |
| Time doubles with every increment | | | | | | | | | |
| 1 | 0 | 0 | 0 | 26.5 ms | 256 ms | 1.53 s | 7.9 ms | 63.2 ms | 455.8 ms |
| 1 | 0 | 0 | 1 | 53 ms | 512 ms | 3.06 s | 15.87 ms | 127 ms | 916 ms |
| 1 | 0 | 1 | 0 | 128 ms | 1 s | 7.89 s | 31.7ms | 254 ms | 1.83 s |
| To | | | | | | | | | |
| 1 | 1 | 1 | 1 | | | | | | |

## 6.20 Noise Gain Control Register

| Addr | D8 | D7 | D6 | D5 | D4 | D3 | D2 | D1 | D0 | Default |
|---|---|---|---|---|---|---|---|---|---|---|
| **0x23** | 0 | 0 | 0 | 0 | 0 | ALCNEN | ALCNTH[2:0] | | | **0x000** |

| Noise Gate Enable | |
|---|---|
| **Bit** | **ALCNEN[3]** |
| 0 | Disabled |
| 1 | Enabled |

| Noise Gate Threshold | | | |
|---|---|---|---|
| **ALCNTH[2:0]** | | | **Mode** |
| **B2** | **B1** | **B0** | |
| 0 | 0 | 0 | -39 dB |
| 0 | 0 | 1 | -45 dB |
| 0 | 1 | 0 | -51 dB |
| 0 | 1 | 1 | -57 dB |
| 1 | 0 | 0 | -63 dB |
| 1 | 0 | 1 | -69 dB |
| 1 | 1 | 0 | -75 dB |
| 1 | 1 | 1 | -81 dB |

## 6.21 Phase Lock Loop (PLL) Registers

### 6.21.1 PLL Control Registers

| Addr | D8 | D7 | D6 | D5 | D4 | D3 | D2 | D1 | D0 | Default |
|---|---|---|---|---|---|---|---|---|---|---|
| **0x24** | 0 | 0 | 0 | 0 | PLLMCLK | PLLN[3:0] | | | | **0x008** |

| PLL Integer | | | | |
|---|---|---|---|---|
| **PLLN[3:0]** | | | | **Frequency Ratio** |
| **B3** | **B2** | **B1** | **B0** | |
| 0 | 0 | 0 | 1 | Not Valid |
| To | | | | |
| 0 | 1 | 0 | 0 | |
| 0 | 1 | 0 | 1 | 5 |
| 0 | 1 | 1 | 0 | 6 |
| 0 | 1 | 1 | 1 | 7 |
| 1 | 0 | 0 | 0 | 8 |
| 1 | 0 | 0 | 1 | 9 |
| 1 | 0 | 1 | 0 | 10 |
| 1 | 0 | 1 | 1 | 11 |
| 1 | 1 | 0 | 0 | 12 |
| 1 | 1 | 0 | 1 | 13 |
| 1 | 1 | 1 | 0 | Not Valid |
| 1 | 1 | 1 | 1 | |

| | PLL Clock |
|---|---|
| **Bit** | **PLLMCLK[4]** |
| 0 | MCLK not divided |
| 1 | Divide MCLK by 2 before input PLL |

### 6.21.2 Phase Lock Loop Control (PLL) Registers

| Addr | D8 | D7 | D6 | D5 | D4 | D3 | D2 | D1 | D0 | Default |
|---|---|---|---|---|---|---|---|---|---|---|
| **0x25** | 0 | 0 | 0 | PLLK[23:18] | | | | | | **0x00C** |
| **0x26** | PLLK[17:9] | | | | | | | | | **0x093** |
| **0x27** | PLLK[8:0] | | | | | | | | | **0x0E9** |

Fractional (K) part of PLLK1 – PLLK3 input/output frequency ratio

## 6.22 Input, Output, And Mixers Control Register

### 6.22.1 Attenuation Control Register

| Addr | D8 | D7 | D6 | D5 | D4 | D3 | D2 | D1 | D0 | Default |
|---|---|---|---|---|---|---|---|---|---|---|
| **0x28** | 0 | 0 | 0 | 0 | 0 | 0 | MOUTATT | SPKATT | 0 | **0x000** |

| | Attenuation Control | |
|---|---|---|
| **Name** | **Attenuation control for bypass path (output of input boost stage) to speaker mixer and MONO mixer input** | |
| **Bit** | **MOUTATT[2]** | **SPKATT[1]** |
| 0 | 0 dB | 0 dB |
| 1 | -10 dB | -10 dB |

### 6.22.2 Input Signal Control Register

| Addr | D8 | D7 | D6 | D5 | D4 | D3 | D2 | D1 | D0 | Default |
|---|---|---|---|---|---|---|---|---|---|---|
| **0x2C** | MICBIASV | | 0 | 0 | 0 | 0 | 0 | NMICPGA | PMICPGA | **0x003** |

| | MICN to input PGA negative terminal | Input PGA amplifier positive terminal to MIC+ or VREF |
|---|---|---|
| **Bit** | **NMICPGA[1]** | **PMICPGA[0]** |
| 0 | MICN not connected to input PGA | Input PGA Positive terminal to VREF |
| 1 | MICN to input PGA Negative terminal. | Input PGA Positive terminal to MICP through variable resistor |

| Microphone Bias Voltage Control | | | |
|---|---|---|---|
| **MICBIASV[8:7] Address (0x2C)** | | **MICBIASM[4] = 0 Address (0x28)** | **MICBIASM[4] = 1 Address (0x28)** |
| 0 | 0 | 0.9* VDDA | 0.85* VDDA |
| 0 | 1 | 0.65* VDDA | 0.60* VDDA |
| 1 | 0 | 0.75* VDDA | 0.70* VDDA |
| 1 | 1 | 0.50* VDDA | 0.50* VDDA |

### 6.22.3 PGA Gain Control Register

| Addr | D8 | D7 | D6 | D5 | D4 | D3 | D2 | D1 | D0 | Default |
|---|---|---|---|---|---|---|---|---|---|---|
| **0x2D** | 0 | PGAZC | PGAMT | PGAGAIN[5:0] | | | | | | **0x010** |

| Programmable Gain Amplifier Gain | | | | | | |
|---|---|---|---|---|---|---|
| PGAGAIN[5:0] | | | | | | |
| **B5** | **B4** | **B3** | **B2** | **B1** | **B0** | **Gain** |
| 0 | 0 | 0 | 0 | 0 | 0 | -12.00 dB |
| 0 | 0 | 0 | 0 | 0 | 1 | -11.25 dB |
| 0 | 0 | 0 | 0 | 1 | 0 | -10.50 dB |
| ::: | ::: | ::: | ::: | ::: | ::: | ::: |
| 0 | 0 | 1 | 1 | 1 | 1 | -0.75 dB |
| 0 | 1 | 0 | 0 | 0 | 0 | 0 dB |
| 0 | 1 | 0 | 0 | 0 | 1 | +0.75 dB |
| **PGA Gain Range -12dB to +35.25dB @ 0.75 increment** | | | | | | |
| ::: | ::: | ::: | ::: | ::: | ::: | ::: |
| 1 | 1 | 1 | 1 | 0 | 1 | 33.75 |
| 1 | 1 | 1 | 1 | 1 | 0 | 34.50 |
| 1 | 1 | 1 | 1 | 1 | 1 | 35.25 |

| | PGA Zero Cross Enable | Mute Control for PGA |
|---|---|---|
| **Bit** | **PGAZC[7]** | **PGAMT[6]** |
| 0 | Update gain when gain register changes | Normal Mode |
| 1 | Update gain on 1st zero cross after gain register write | PGA Muted |

### 6.22.4 ADC Boost Control Registers

| Addr | D8 | D7 | D6 | D5 | D4 | D3 | D2 | D1 | D0 | Default |
|---|---|---|---|---|---|---|---|---|---|---|
| **0x2F** | PGABST | 0 | PMICBSTGAIN | | | 0 | 0 | 0 | 0 | **0x100** |

| MIC+ pin to the input Boost Stage (NB, when using this path set PMICPGA=0): | | | |
|---|---|---|---|
| **PMICBSTGAIN[2:0]** | | | Gain (dB) |
| B2 | B1 | B0 | |
| 0 | 0 | 0 | Path Disconnected |
| 0 | 0 | 1 | -12 |
| 0 | 1 | 0 | -9 |
| 0 | 1 | 1 | -6 |
| 1 | 0 | 0 | -3 |
| 1 | 0 | 1 | 0 |
| 1 | 1 | 0 | +3 |
| 1 | 1 | 1 | +6 |

| Name | Input Boost |
|---|---|
| **Bit** | **PGABST[8]** |
| 0 | PGA output has +0dB gain through input Boost stage |
| 1 | PGA output has +20dB gain through input Boost stage |

### 6.22.5 Output Register

| Addr | D8 | D7 | D6 | D5 | D4 | D3 | D2 | D1 | D0 | Default |
|---|---|---|---|---|---|---|---|---|---|---|
| **0x31** | 0 | 0 | 0 | 0 | 0 | MOUTBST | SPKBST | TSEN | AOUTIMP | **0x002** |

| | MONO Output Boost Stage | Speaker Output Boost Stage | Thermal Shutdown | Analog Output Resistance |
|---|---|---|---|---|
| **Bit** | **MOUTBST[3]** | **SPKBST[2]** | **TSEN[1]** | **AOUTIMP[0]** |
| 0 | (1.0 x VREF) Gain Boost | (1.0 x VREF) Gain Boost | Disabled | ~1kΩ |
| 1 | (1.5 x VREF) Gain Boost | (1.5 x VREF) Gain Boost | Enabled | ~30 kΩ |

### 6.22.6 Speaker Mixer Control Register

| Addr | D8 | D7 | D6 | D5 | D4 | D3 | D2 | D1 | D0 | Default |
|---|---|---|---|---|---|---|---|---|---|---|
| **0x32** | 0 | 0 | 0 | 0 | 0 | 0 | 0 | BYPSPK | DACSPK | **0x001** |

| | Bypass path (output of Boost stage) to Speaker Mixer | DAC to Speaker Mixer |
|---|---|---|
| **Bit** | **BYPSPK[1]** | **DACSPK[0]** |
| 0 | Disconnected | Disconnected |
| 1 | Connected | Connected |

### 6.22.7 Speaker Gain Control Register

| Addr | D8 | D7 | D6 | D5 | D4 | D3 | D2 | D1 | D0 | Default |
|---|---|---|---|---|---|---|---|---|---|---|
| **0x36** | 0 | SPKZC | SPKMT | SPKGAIN[5:0] | | | | | | **0x039** |

| Speaker Gain | | | | | | |
|---|---|---|---|---|---|---|
| **SPKGAIN[5:0]** | | | | | | |
| B5 | B4 | B3 | B2 | B1 | B0 | Gain (dB) |
| 0 | 0 | 0 | 0 | 0 | 0 | -57.0 |
| 0 | 0 | 0 | 0 | 0 | 1 | -56.0 |
| 0 | 0 | 0 | 0 | 1 | 0 | -55.0 |
| ::: | ::: | ::: | ::: | ::: | ::: | ::: |
| 1 | 1 | 1 | 0 | 0 | 0 | -1.0 |
| 1 | 1 | 1 | 0 | 0 | 1 | 0.0 |
| 1 | 1 | 1 | 0 | 1 | 0 | +1.0 |
| **Speaker Gain Range -57 dB to +6 dB @ +1 increment** | | | | | | |
| ::: | ::: | ::: | ::: | ::: | ::: | ::: |
| 1 | 1 | 1 | 1 | 0 | 1 | +4.0 |
| 1 | 1 | 1 | 1 | 1 | 0 | +5.0 |
| 1 | 1 | 1 | 1 | 1 | 1 | +6.0 |

| | Speaker Gain Control Zero Cross | Speaker Output |
|---|---|---|
| **Bit** | **SPKZC[7]** | **SPKMT[6]** |
| 0 | Change Gain on Zero Cross ONLY | Speaker Enabled |
| 1 | Change Gain Immediately | Speaker Muted |

### 6.22.8 MONO Mixer Control Register

| Addr | D8 | D7 | D6 | D5 | D4 | D3 | D2 | D1 | D0 | Default |
|---|---|---|---|---|---|---|---|---|---|---|
| **0x38** | 0 | 0 | MOUTMXMT | 0 | 0 | 0 | 0 | BYPMOUT | DACMOUT | **0x001** |

| | MOUT Mute | Bypass path (output of Boost Stage) to MONO Mixer | DAC to MONO Mixer |
|---|---|---|---|
| **Bit** | **MOUTMXMT[6]** | **BYPMOUT[1]** | **DACMOUT[0]** |
| 0 | Not Muted | Disconnected | Disconnected |
| 1 | Muted | Connected | Connected |

During mute, the MONO output will output VREF that can be used as a DC reference for a headphone out.

### 6.22.9 Power Management 4

| Addr | D8 | D7 | D6 | D5 | D4 | D3 | D2 | D1 | D0 | Default |
|---|---|---|---|---|---|---|---|---|---|---|
| **0x3A** | LPIPBST | LPADC | LPSPKD | LPDAC | MICBIASM | TRIMREG[3:2] | | IBADJ[1:0] | | **0x000** |

| **B1** | **B0** | Trim Output Regulator (V) | Adjust Master Bias of the Analog Portion |
|---|---|---|---|
| | | **TRIMREG[3:2]** | **IBADJ[1:0]** |
| 0 | 0 | 1.800 | Default Current Consumption |
| 0 | 1 | 1.610 | 25% Current Increase from Default |
| 1 | 0 | 1.400 | 14% Current Decrease from Default |
| 1 | 1 | 1.218 | 25% Current Decrease from Default |

Trim regulator bits can be used only when VDDD <2.7V.

| | Low Power IP Boost | Low Power ADC | Low Power Speaker Driver | Low Power DAC | Microphone bias Mode selection |
|---|---|---|---|---|---|
| **Bit** | **LPIPBST[8]** | **LPADC[7]** | **LPSPKD[6]** | **LPDAC[5]** | **MICBIASM[4]** |
| 0 | Normal Function | Normal Function | Normal Function | Normal Function | Disable |
| 1 | Cut power in half | Cut power in half | Cut power in half | Cut power in half | Enable |

Note cutting the power in half will directly affect the audio performances.

## 6.23 PCM Time Slot Control & ADCOUT Impedance Option Control

### 6.23.1 PCM1 Timeslot Control Register

| Addr | D8 | D7 | D6 | D5 | D4 | D3 | D2 | D1 | D0 | Default |
|---|---|---|---|---|---|---|---|---|---|---|
| **0x3B** | TSLOT[8:0] | | | | | | | | | **0x000** |

Transmit and receive timeslot are expressed in number of BCLK cycles in a 10-bit word. The most significant bit TSLOT[9] is located in register PCMTS2[0] address (0x3C). Timeslot, TSLOT[9:0], determines the start point for the timeslot on the PCM interface for data in the transmit direction.

### 6.23.2 PCM2 Timeslot Control Register

| Addr | D8 | D7 | D6 | D5 | D4 | D3 | D2 | D1 | D0 | Default |
|---|---|---|---|---|---|---|---|---|---|---|
| **0x3C** | PCMTSEN | TRI | PCM8BIT | PUDOEN | PUDPE | PUDPS | LOUTR | PCMB | TSLOT[9] | **0x000** |

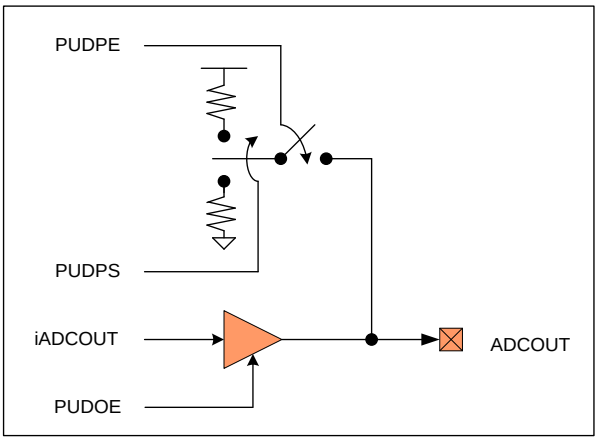


| Name | PCM Transit Enable | Tri-state PCMT LSB | PCM Word Length | Left and Right Channel have same data | PCM Mode2 |
|---|---|---|---|---|---|
| **Bit** | **PCMTSEN[8]** | **TRI[7]** | **PCM8BIT[6]** | **LOUTR** | **PCMB** |
| **0** | PCM A | Drive the full Clock of LSB | Use WLEN[6:5] to select Word Length | Disable | Disable |
| **1** | PCM Time Slot | Tri-State the 2nd half of LSB | Audio interface will be 8 Bit Word Length | Enable | Enable |

If TRI = 1 and PUDOEN = 0, the device will drive the LSB bit 1st half of BCLK out of the ADCOUT pin (stop driving after LSB BCLK Rising edge) but if TRI = 0 or PUDOEN = 1 this feature is disabled, full BCLK of LSB will be driven the LSB value.

Figure 36: The Programmable ADCOUT Pin

| Internal ADC out data | Power Up and Down Output Enable | Power Up and Down Pull Enable | Power Up and Down Pull Select | OUTPUT |
|---|---|---|---|---|
| **iADCOUT** | **PUDOEN[5]** | **PUDPE[4]** | **PUDPS[3]** | **PAD** |
| 0 | 1 | x | x | 0 |
| 1 | 1 | x | x | 1 |
| x | 0 | 0 | x | Hi-Z |
| x | 0 | 1 | 0 | Pull-Low |
| x | 0 | 1 | 1 | Pull-High |

## 6.24 Register ID

### 6.24.1 Device revision register

| Addr | D8 | D7 | D6 | D5 | D4 | D3 | D2 | D1 | D0 | Default |
|---|---|---|---|---|---|---|---|---|---|---|
| **0x3E** | 0 | 1 | 1 | 1 | 0 | 1 | 1 | 1 | 0 | **0x0EE** |

Device revision ID

### 6.24.2 2-WIRE ID Register

| Addr | D8 | D7 | D6 | D5 | D4 | D3 | D2 | D1 | D0 | Default |
|---|---|---|---|---|---|---|---|---|---|---|
| **0x3F** | 0 | 0 | 0 | 0 | 1 | 1 | 0 | 1 | 0 | **0x01A** |

First 7 bits (D0 – D6) of the 2-Wire device ID excluding the LSB /write bit.

### 6.24.3 Additional ID

| Addr | D8 | D7 | D6 | D5 | D4 | D3 | D2 | D1 | D0 | Default |
|---|---|---|---|---|---|---|---|---|---|---|
| **0x40** | 0 | 1 | 1 | 0 | 0 | 1 | 0 | 1 | 0 | **0x0CA** |

ONLY

### 6.24.4 Reserved

| Addr | D8 | D7 | D6 | D5 | D4 | D3 | D2 | D1 | D0 | Default |
|---|---|---|---|---|---|---|---|---|---|---|
| **0x41** | 1 | 0 | 0 | 1 | 0 | 0 | 1 | 0 | 0 | **0x124** |

## 6.25 OUTPUT Driver Control Register

| Addr | D8 | D7 | D6 | D5 | D4 | D3 | D2 | D1 | D0 | Default |
|---|---|---|---|---|---|---|---|---|---|---|
| **0x45** | 0 | | | SPKMOUT | MOUTMT | 0 | HVOPU | 0 | HVOP | **0x001** |

| Bit Location | Bit Description | Bit Name | Bit Value | |
|---|---|---|---|---|
| | | | **0** | **1** |
| 0 | Override to automatic 3V/5V bias selection | **HVOP** | set internal output biasing to be optimal for 3.6Vdc or lower operation<br><br>**Note: For this to be effective HVOPU[2] address 0x45 must set** | set internal output biasing to be optimal for higher than 3.6Vdc operation<br><br>**Note: For this to be effective HVOPU[2] address 0x45 must set** |
| 2 | Update bit for HV override feature | **HVOPU** | High Voltage override Disable | This bit must set in conjunction with HVOP[0] address 0x45 for the automatic override to be effective |
| 4 | Headphone output mute | **MOUTMT** | Disable | Enable |
| 5 | Speaker signals go to MOUT | **SPKMOUT** | Disable | Enable |

During mute, the MONO output will output VREF that can be used as a DC reference for a headphone out.

## 6.26 Automatic Level Control Enhanced Register

### 6.26.1 ALC1 Enhanced Register

| Addr | D8 | D7 | D6 | D5 | D4 | D3 | D2 | D1 | D0 | Default |
|---|---|---|---|---|---|---|---|---|---|---|
| **0x46** | ALCTBLSEL | ALCPKSEL | ALCNGSEL | ALCGAIN ( ONLY) | | | | | | **0x001** |

| Bit Location | Bit Description | Bit Name | Bit Value | |
|---|---|---|---|---|
| | | | **0** | **1** |
| 6 | Selects one of two tables used to set the target level for the ALC | **ALCNGSEL** | default recommended target level table spanning -1.5dB through -22.5dB FS | optional ALC target level table spanning -6.0dB through -28.5dB FS |
| 7 | Choose peak or peak-to-peak value for ALC threshold logic | **ALCPKSEL** | use rectified peak detector output value | use peak-to-peak detector output value |
| 8 | Choose peak or peak-to-peak value for Noise Gate threshold logic | **ALCTBLSEL** | use rectified peak detector output value | use peak-to-peak detector output value |

### 6.26.2 ALC Enhanced 2 Register

| Addr | D8 | D7 | D6 | D5 | D4 | D3 | D2 | D1 | D0 | Default |
|---|---|---|---|---|---|---|---|---|---|---|
| **0x47** | PKLIMEN | 0 | | | | | | | | **0x000** |

| Bit Location | Bit Description | Bit Name | Bit Value | |
|---|---|---|---|---|
| | | | **0** | **1** |
| 8 | Enable control for ALC fast peak limiter function | **PKLIMEN** | Enable | Disable |

## 6.27 Misc Control Register

| Addr | D8 | D7 | D6 | D5 | D4 | D3 | D2 | D1 | D0 | Default |
|---|---|---|---|---|---|---|---|---|---|---|
| **0x49** | 0 | FSERRVAL[1:0] | | FSERFLSH | FSERRENA | NFDLY | DACINMT | PLLLOCKP | DACOS256 | **0x000** |

| Bit Location | Bit Description | Bit Name | Bit Value | |
|---|---|---|---|---|
| | | | **0** | **1** |
| 0 | Set DAC to use 256x oversampling rate | **DACOS256** | Use oversampling rate as determined by Register 0x0A[3] (default) | Set DAC to 256x oversampling rate regardless of Register 0x0A[3] |
| 1 | Enable control to use PLL output when PLL is not in phase locked condition | **PLLLOCKP** | PLL VCO output disabled when PLL is in unlocked condition (default) | PLL VCO output used as-is when PLL is in unlocked condition |
| 2 | Enable control to mute DAC limiter output when softmute is enabled | **DACINMT** | DAC limiter output may not move to exactly zero during Softmute (default) | DAC limiter output muted to exactly zero during Softmute |
| 3 | Enable control to delay use of notch filter output when filter is enabled | **NFDLY** | Delay using notch filter output 512 sample times after notch enabled (default) | Use notch filter output immediately after notch filter is enabled |
| 4 | Enable control for short frame cycle detection logic | **FSERRENA** | Short frame cycle detection logic enabled | Short frame cycle detection logic disabled |
| 5 | Enable DSP state flush on short frame sync event | **FSERFLSH** | Ignore short frame sync events (default) | Set DSP state to initial conditions on short frame sync event |

| **B1** | **B0** | Short frame sync detection period value trigger if frame time less than **FSERRVAL[1:0]** |
|---|---|---|
| 0 | 0 | 255 MCLK edges |
| 0 | 1 | 253 MCLK edges |
| 1 | 0 | 254 MCLK edges |
| 1 | 1 | 255 MCLK edges |

## 6.28 Output Tie-Off Register

| Addr | D8 | D7 | D6 | D5 | D4 | D3 | D2 | D1 | D0 | Default |
|---|---|---|---|---|---|---|---|---|---|---|
| **0x4B** | 0 | LPSPKA | | | | | MANVREFH | MANVREFM | MANVREFL | **0x000** |

| Bit Location | Bit Description | Bit Name | Bit Value | |
|---|---|---|---|---|
| | | | 0 | 1 |
| 0 | Direct manual control for switch for VREF 6k-ohm resistor to ground | **MANVREFL** | switch to ground controlled by Register 0x01 setting | switch to ground in the closed position |
| 1 | Direct manual control for switch for VREF 160k-ohm resistor to ground | **MANVREFM** | switch to ground controlled by Register 0x01 setting | switch to ground in the closed position |
| 2 | Direct manual control of switch for VREF 600k-ohm resistor to ground | **MANVREFH** | switch to ground controlled by Register 0x01 setting | switch to ground in the closed position |
| 7 | Amplifier Stage | **LPSPKA** | Two-stage amplifier for speaker driver | Three-stage amplifier for speaker driver |

## 6.29 AGC Peak-To-Peak Out Register

| Addr | D8 | D7 | D6 | D5 | D4 | D3 | D2 | D1 | D0 | Default |
|---|---|---|---|---|---|---|---|---|---|---|
| **0x4C** | P2PDET | | | | | | | | | **0x000** |

| Bit Location | Bit Description | Bit Name |
|---|---|---|
| 0 – 8 | ONLY Register<br>Outputs the instantaneous value contained in the peak-to-peak amplitude register used by the ALC for signal level dependent logic. Value is highest of left or right input when both inputs are under ALC control. | **P2PDET** |

## 6.30 AGC Peak Out Register

| Addr | D8 | D7 | D6 | D5 | D4 | D3 | D2 | D1 | D0 | Default |
|---|---|---|---|---|---|---|---|---|---|---|
| **0x4D** | PDET | | | | | | | | | **0x000** |

| Bit Location | Bit Description | Bit Name |
|---|---|---|
| 0 – 8 | ONLY Register<br>Outputs the instantaneous value contained in the peak detector amplitude register used by the ALC for signal level dependent logic. Value is highest of left or right input when both inputs are under ALC control. | **PDET** |

## 6.31 Auto-mute Control and Status Register

| Addr | D8 | D7 | D6 | D5 | D4 | D3 | D2 | D1 | D0 | Default |
|---|---|---|---|---|---|---|---|---|---|---|
| **0x4E** | 0 | 0 | AMTCTRL | HVDET | NSGATE | AMUTE | DMUTE | 0 | FTDEC | **0x000** |

| Bit Location | Bit Description | Bit Name | Bit Value | |
|---|---|---|---|---|
| | | | 0 | 1 |
| 0 | Peak limiter indicator | **FASTDEC** | Below 87.5% of full scale | Above 87.5% of full scale |
| 2 | **ONLY BIT**<br>Digital Mute function of the DAC | **DMUTE** | Digital gain greater than zero | Digital gain is zero either by<br>- Direct setting<br>- Softmute function |
| 3 | **ONLY BIT**<br>Analog Mute function applied to DAC | **AMUTE** | Automute Disabled | Automute Enabled |
| 4 | **ONLY BIT**<br>Logic controlling the Noise Gate | **NSGATE** | Signal is greater than the noise gate threshold and ALC gain can change | Signal is less than the noise gate threshold and ALC gain is held constant |
| 5 | **ONLY BIT**<br>High voltage detection circuit monitoring VDDSPK voltage | **HVDET** | VDDSPK logic switch voltage threshold measured as 4.0Vdc or Less | VDDSPK logic switch voltage threshold measured as 4.0Vdc or Greater |
| 6 | Select observation point used by DAC output Automute feature | **AMTCTRL** | Automute operates on data at the input to the DAC digital attenuator (default) | Automute operates on data at the DACIN input pin |

## 6.32 Output Tie-Off Direct Manual Control Register

| Addr | D8 | D7 | D6 | D5 | D4 | D3 | D2 | D1 | D0 | Default |
|---|---|---|---|---|---|---|---|---|---|---|
| **0x4F** | MANOUTEN | SBUFH | SBUFL | SNSPK | SPSPK | SMOUT | 0 | 0 | 0 | **0x000** |

| Bit Location | Bit Description | Bit Name | Bit Value | |
|---|---|---|---|---|
| | | | 0 | 1 |
| 3 | If MANUOUTEN = 1, use this bit to control Auxout1 output tie-off resistor switch | **SMOUT** | Tie-off resistor switch for MOUT output is forced open | Tie-off resistor switch for MOUT output is forced closed |
| 4 | If MANUOUTEN = 1, use this bit to control left speaker output Tie-off resistor switch | **SPSPK** | Tie-off resistor switch for SPKOUTP speaker output is forced open | Tie-off resistor switch for SPKOUTP speaker output is forced closed |
| 5 | If MANUOUTEN = 1, use this bit to control left speaker output Tie-off resistor switch | **SNSPK** | Tie-off resistor switch for SPKOUTN speaker output is forced open | Tie-off resistor switch for SPKOUTN speaker output is forced closed |
| 6 | If MANUOUTEN = 1, use this bit to control bypass switch around 1.0x non-boosted output Tie-off buffer amplifier | **SBUFL** | Normal automatic operation of bypass switch | Bypass switch in closed position when output buffer amplifier is disabled |
| 7 | If MANUOUTEN = 1, use this bit to control bypass switch around 1.5x boosted output Tie-off buffer amplifier | **SBUFH** | Normal automatic operation of bypass switch | Bypass switch in closed position when output buffer amplifier is disabled |
| 8 | Enable direct control over output Tie-off resistor switching | **MANOUTEN** | Ignore Register 0x4F bits to control input Tie-off resistor/buffer switching | Use Register 0x4F bits to override automatic Tie-off resistor/buffer switching |

## 6.33 Control Interface Timing Diagram

### 6.33.1 2-Wire Timing Diagram

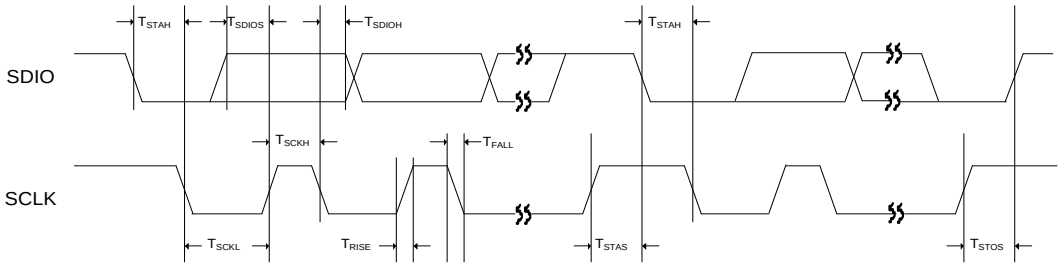


Figure 37: 2-Wire Timing Diagram

| SYMBOL | DESCRIPTION | MIN | TYP | MAX | UNIT |
|---|---|---|---|---|---|
| $T_{STAH}$ | START / Repeat START condition, SCLK falling edge to SDIO falling edge hold timing | 600 | --- | --- | ns |
| $T_{STAS}$ | Repeat START condition, SDIO rising edge to SCLK falling edge setup timing | 600 | --- | --- | ns |
| $T_{STOS}$ | STOP condition, SDIO rising edge to SCLK rising edge setup timing | 600 | --- | --- | ns |
| $T_{SCKH}$ | SCLK High Pulse Width | 600 | --- | --- | ns |
| $T_{SCKL}$ | SCLK Low Pulse Width | 1.3 | --- | --- | us |
| $T_{RISE}$ | Rise Time for all 2-Wire Signals | --- | --- | 300 | ns |
| $T_{FALL}$ | Fall Time for all 2-Wire Signals | --- | --- | 300 | ns |
| $T_{SDIOS}$ | SDIO to SCLK Rising Edge DATA Setup Time | 400 | --- | --- | ns |
| $T_{SDIOH}$ | SCLK falling Edge to SDIO DATA Hold Time | 0 | --- | 600 | ns |

Table 31: 2-WireTiming Parameters

## 6.34 Audio Interface Timing Diagram

### 6.34.1 Audio Interface In Slave Mode

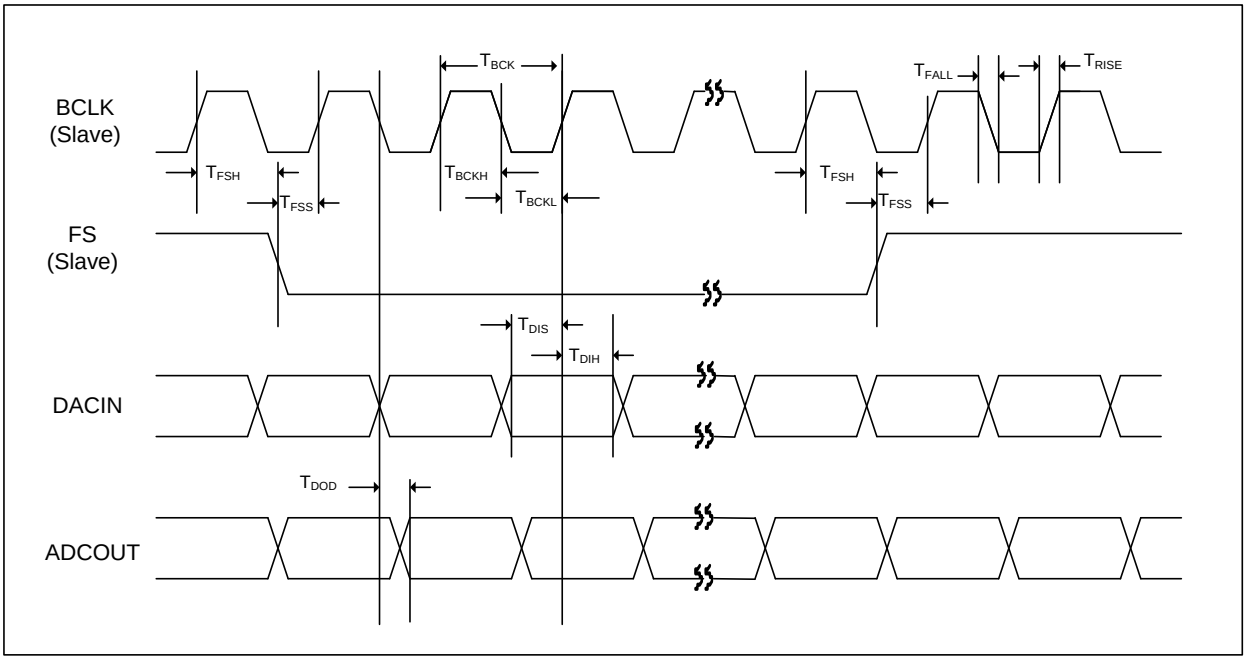


Figure 38: Audio Interface Slave Mode Timing Diagram

### 6.34.2 Audio Interface In Master Mode

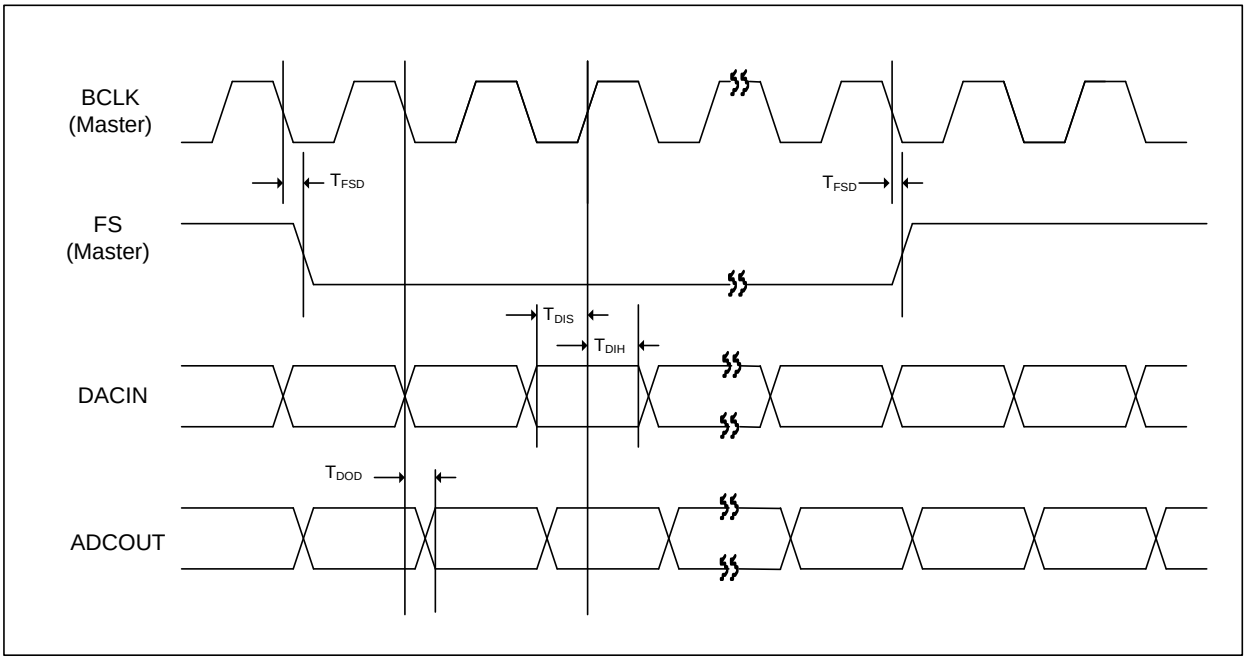


Figure 39: Audio Interface in Master Mode Timing Diagram

### 6.34.3 PCM Audio Interface In Slave Mode (PCM Audio Data)

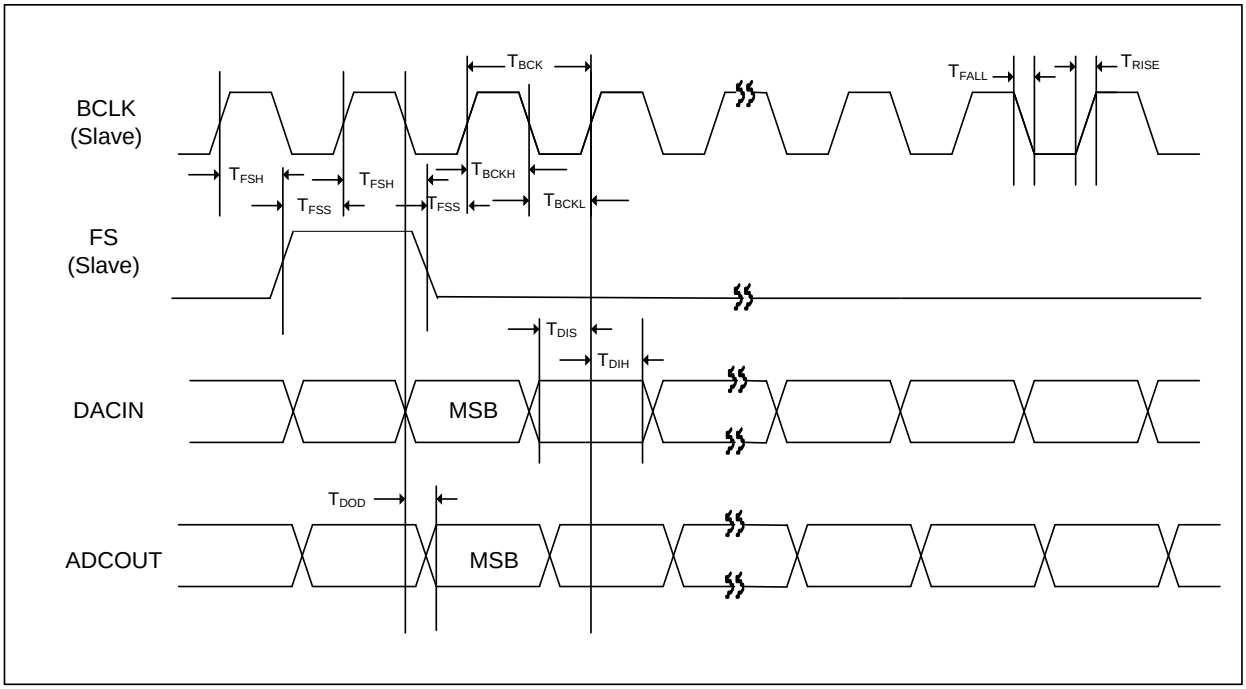


Figure 40: PCM Audio Interface Slave Mode Timing Diagram

### 6.34.4 PCM Audio Interface In Master Mode (PCM Audio Data)

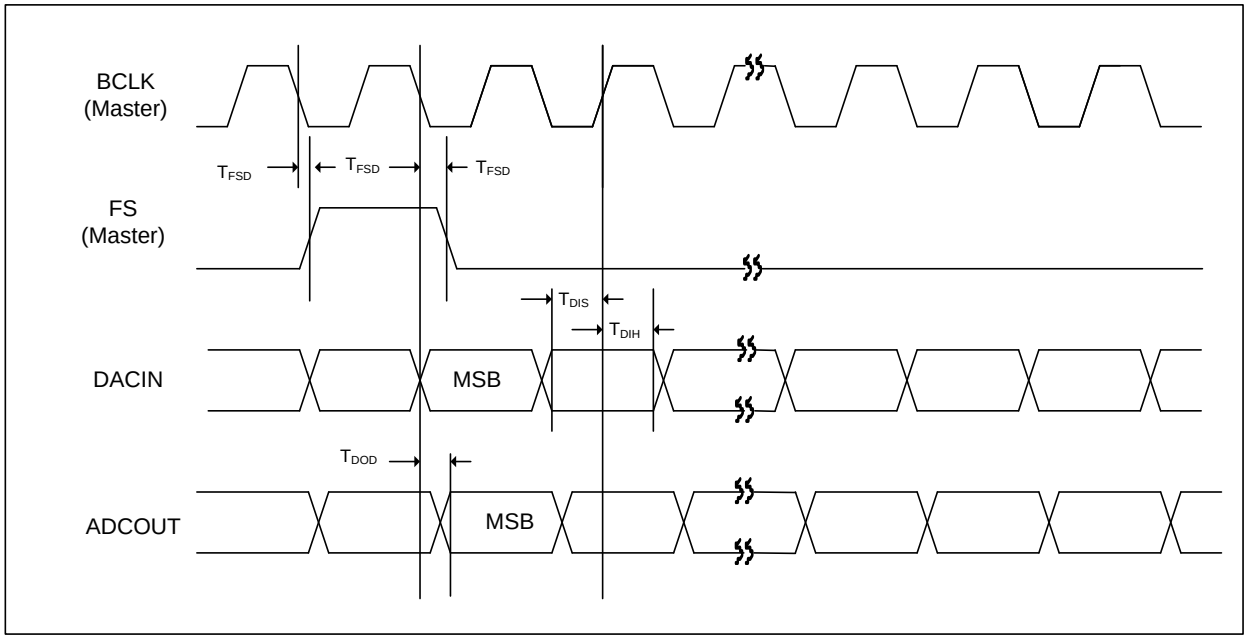


Figure 41: PCM Audio Interface Slave Mode Timing Diagram

### 6.34.5 PCM Audio Interface In Slave Mode (PCM Time Slot Mode)

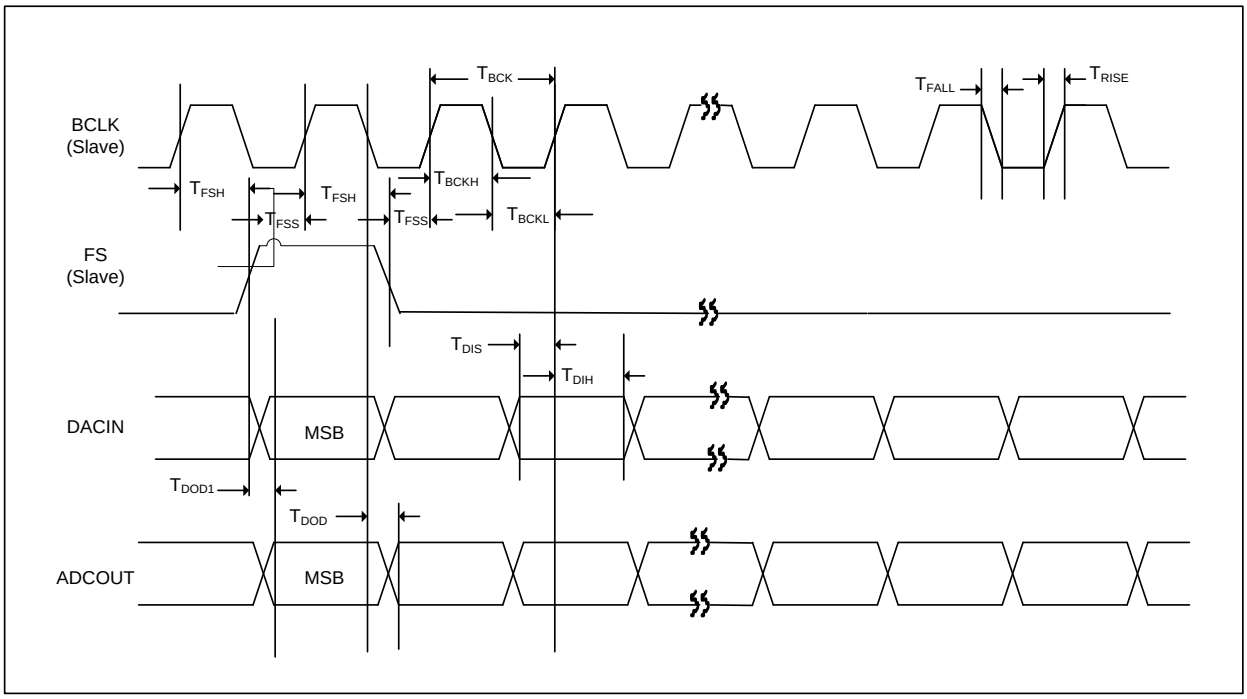


Figure 42: PCM Audio Interface Slave Mode (PCM Time Slot Mode )Timing Diagram

### 6.34.6 PCM Audio Interface In Master Mode (PCM Time Slot Mode)

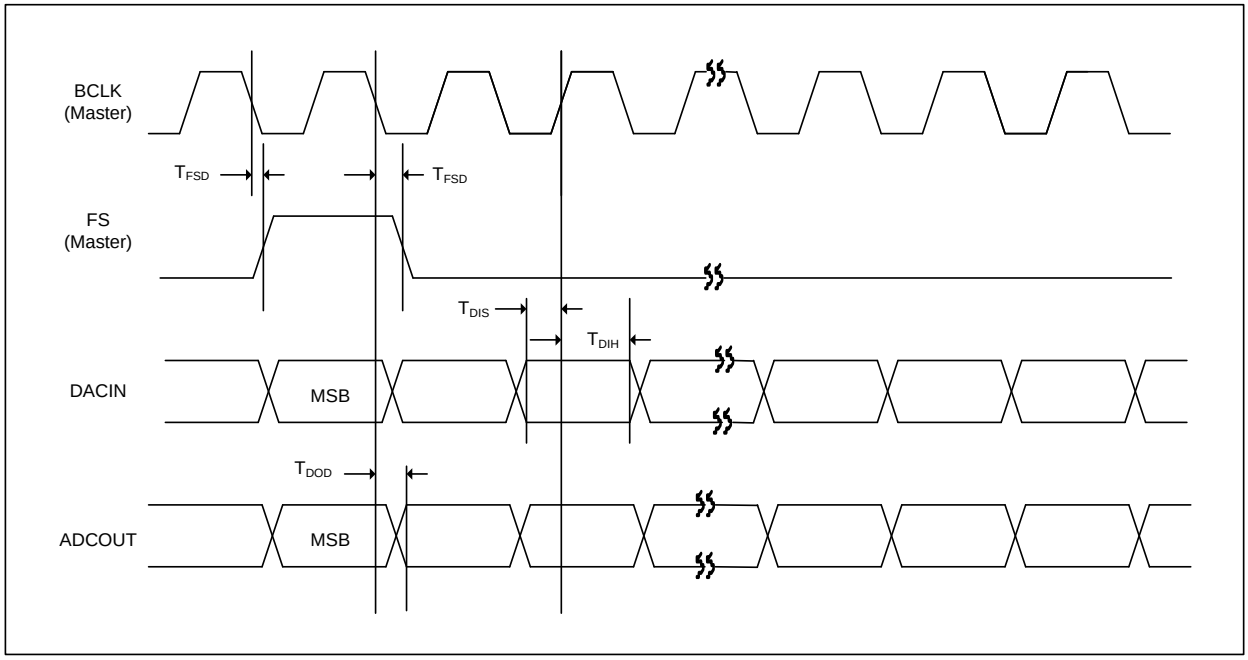


Figure 43: PCM Audio Interface Master Mode (PCM Time Slot Mode )Timing Diagram

| SYMBOL | DESCRIPTION | MIN | TYP | MAX | UNIT |
|---|---|---|---|---|---|
| $T_{BCK}$ | BSCK Cycle Time (Slave Mode) | 50 | --- | --- | ns |
| $T_{BCKH}$ | BSCK High Pulse Width (Slave Mode) | 20 | --- | --- | ns |
| $T_{BCKL}$ | BSCK Low Pulse Width (Slave Mode) | 20 | --- | --- | ns |
| $T_{FSS}$ | fs to SCK Rising Edge Setup Time (Slave Mode) | 20 | --- | --- | ns |
| $T_{FSH}$ | SCK Rising Edge to fs Hold Time (Slave Mode) | 20 | --- | --- | ns |
| $T_{FSD}$ | fs to SCK falling to fs transition (Master Mode) | --- | --- | 10 | ns |
| $T_{RISE}$ | Rise Time for All Audio Interface Signals | --- | --- | $0.135T_{BCK}$ | ns |
| $T_{FALL}$ | Fall Time for All Audio Interface Signals | --- | --- | $0.135T_{BCK}$ | ns |
| $T_{DIS}$ | DACIN to SCK Rising Edge Setup Time | 15 | --- | --- | ns |
| $T_{DIH}$ | SCK Rising Edge to DACIN Hold Time | 15 | --- | --- | ns |
| $T_{DOD}$ | Delay Time from SCLK falling Edge to ADCOUT (Master Node) | --- | --- | 20 | ns |
| | Delay Time from SCLK falling Edge to ADCOUT (Slave Node) | --- | --- | 30 | ns |

Table 32: Audio Interface Timing Parameters

### 6.34.7 System Clock (MCLK) Timing Diagram

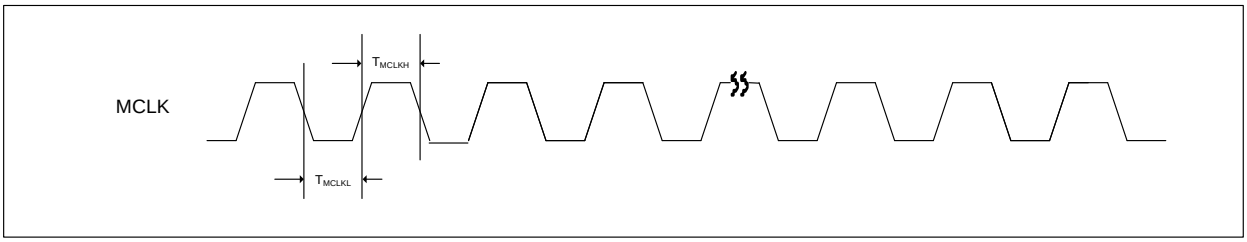


Figure 44: MCLK Timing Diagram

| PARAMETER | SYMBOL | TEST CONDITIONS | MIN | TYP | MAX | UNIT |
|---|---|---|---|---|---|---|
| MCLK Duty Cycle | $T_{MCLKDC}$ | | 60:40 | | 40:60 | |
| MCLK High Pulse Width | $T_{MCLKH}$ | | 20 | --- | --- | ns |
| MCLK Low Pulse Width | $T_{MCLKL}$ | | 20 | --- | --- | ns |

Table 33: MCLK Timing Parameter

### 6.34.8 µ-Law Encoding & Decoding Characteristics

| Normalized Encode Decision Levels | Digital Code | | | | | | | | Normalized Decode Levels |
|---|---|---|---|---|---|---|---|---|---|
| | D7 | D6 | D5 | D4 | D3 | D2 | D1 | D0 | |
| | Sign | Chord | Chord | Chord | Step | Step | Step | Step | |
| 8159 | | | | | | | | | |
| | 1 | 0 | 0 | 0 | 0 | 0 | 0 | 0 | 8031 |
| 7903 : 4319 | : | : | : | : | : | : | : | : | : |
| | 1 | 0 | 0 | 0 | 1 | 1 | 1 | 1 | 4191 |
| 4063 : 2143 | : | : | : | : | : | : | : | : | : |
| | 1 | 0 | 0 | 1 | 1 | 1 | 1 | 1 | 2079 |
| 2015 : 1055 | : | : | : | : | : | : | : | : | : |
| | 1 | 0 | 1 | 0 | 1 | 1 | 1 | 1 | 1023 |
| 991 : 511 | : | : | : | : | : | : | : | : | : |
| | 1 | 0 | 1 | 1 | 1 | 1 | 1 | 1 | 495 |
| 479 : 239 | : | : | : | : | : | : | : | : | : |
| | 1 | 1 | 0 | 0 | 1 | 1 | 1 | 1 | 231 |
| 223 : 103 | : | : | : | : | : | : | : | : | : |
| | 1 | 1 | 0 | 1 | 1 | 1 | 1 | 1 | 99 |
| 95 : 35 | : | : | : | : | : | : | : | : | : |
| | 1 | 1 | 1 | 0 | 1 | 1 | 1 | 1 | 33 |
| 31 : 3 | : | : | : | : | : | : | : | : | : |
| | 1 | 1 | 1 | 1 | 1 | 1 | 1 | 0 | 2 |
| 1 | : | : | : | : | : | : | : | : | : |
| | 1 | 1 | 1 | 1 | 1 | 1 | 1 | 1 | 0 |
| 0 | | | | | | | | | |

Notes:
Sign bit = 0 for negative values, sign bit = 1 for positive values

### 6.34.9 A-Law Encoding & Decoding Characteristics

| Normalized Encode Decision Levels | Digital Code | | | | | | | | Normalized Decode Levels |
|---|---|---|---|---|---|---|---|---|---|
| | D7 | D6 | D5 | D4 | D3 | D2 | D1 | D0 | |
| | Sign | Chord | Chord | Chord | Step | Step | Step | Step | |
| 4096 | | | | | | | | | |
| | 1 | 0 | 1 | 0 | 1 | 0 | 1 | 0 | 4032 |
| 3968 : 2176 | : | : | : | : | : | : | : | : | : |
| | 1 | 0 | 1 | 0 | 0 | 1 | 0 | 1 | 2112 |
| 2048 : 1088 | : | : | : | : | : | : | : | : | : |
| | 1 | 0 | 1 | 1 | 0 | 1 | 0 | 1 | 1056 |
| 1024 : 544 | : | : | : | : | : | : | : | : | : |
| | 1 | 0 | 0 | 0 | 0 | 1 | 0 | 1 | 528 |
| 512 : 272 | : | : | : | : | : | : | : | : | : |
| | 1 | 0 | 0 | 1 | 0 | 1 | 0 | 1 | 264 |
| 256 : 136 | : | : | : | : | : | : | : | : | : |
| | 1 | 1 | 1 | 0 | 0 | 1 | 0 | 1 | 132 |
| 128 : 68 | : | : | : | : | : | : | : | : | : |
| | 1 | 1 | 1 | 0 | 0 | 1 | 0 | 1 | 66 |
| 64 : 2 | : | : | : | : | : | : | : | : | : |
| | 1 | 1 | 0 | 1 | 0 | 1 | 0 | 1 | 1 |
| 0 | | | | | | | | | |

Notes:
1. Sign bit = 0 for negative values, sign bit = 1 for positive values
2. Digital code includes inversion of all even number bits

### 6.34.10 μ-Law / A-Law Codes For Zero And Full Scale

| Level | μ-Law | | | A-Law | | |
|---|---|---|---|---|---|---|
| | Sign bit (D7) | Chord bits (D6,D5,D4) | Step bits (D3,D2,D1,D0) | Sign bit (D7) | Chord bits (D6,D5,D4) | Step bits (D3,D2,D1,D0) |
| + Full Scale | 1 | 000 | 0000 | 1 | 010 | 1010 |
| + Zero | 1 | 111 | 1111 | 1 | 101 | 0101 |
| - Zero | 0 | 111 | 1111 | 0 | 101 | 0101 |
| - Full Scale | 0 | 000 | 0000 | 0 | 010 | 1010 |

### 6.34.11 μ-Law / A-Law Output Codes (Digital MW)

| Sample | μ-Law | | | A-Law | | |
|---|---|---|---|---|---|---|
| | Sign bit (D7) | Chord bits (D6,D5,D4) | Step bits (D3,D2,D1,D0) | Sign bit (D7) | Chord bits (D6,D5,D4) | Step bits (D3,D2,D1,D0) |
| 1 | 0 | 001 | 1110 | 0 | 011 | 0100 |
| 2 | 0 | 000 | 1011 | 0 | 010 | 0001 |
| 3 | 0 | 000 | 1011 | 0 | 010 | 0001 |
| 4 | 0 | 001 | 1110 | 0 | 011 | 0100 |
| 5 | 1 | 001 | 1110 | 1 | 011 | 0100 |
| 6 | 1 | 000 | 1011 | 1 | 010 | 0001 |
| 7 | 1 | 000 | 1011 | 1 | 010 | 0001 |
| 8 | 1 | 001 | 1110 | 1 | 011 | 0100 |

## 6.35 Digital Filter Characteristics

| PARAMETER | TEST CONDITIONS | MIN | TYP | MAX | UNIT |
|---|---|---|---|---|---|
| **ADC Filter** | | | | | |
| Passband | +/- 0.025dB | 0 | | 0.454*fs | |
| | -6dB | | 0.5*fs | | |
| Passband Ripple | | | | +/-0.025 | dB |
| Stopband | | 0.546*fs | | | |
| Stopband Attenuation | f > 0.546*fs | -60 | | | dB |
| Group Delay | | | 21/fs | | |
| **ADC High Pass Filter** | | | | | |
| High Pass Filter Corner Frequency | -3dB | | 3.7 | | Hz |
| | -0.5dB | | 10.4 | | |
| | -0.1dB | | 21.6 | | |
| **DAC Filter** | | | | | |
| Passband | +/- 0.035dB | 0 | | 0.454*fs | |
| | -6dB | | 0.5*fs | | |
| Passband Ripple | | | | +/-0.035 | dB |
| Stopband | | 0.546*fs | | | |
| Stopband Attenuation | f > 0.546*fs | -55 | | | dB |
| Group Delay | | | 29/fs | | |

Table 57 Digital Filter Characteristics

**TERMINOLOGY**

1. Stop Band Attenuation (dB) – the degree to which the frequency spectrum is attenuated (outside audio band)
2. Pass-band Ripple – any variation of the frequency response in the pass-band region
3. Note that this delay applies only to the filters and does not include

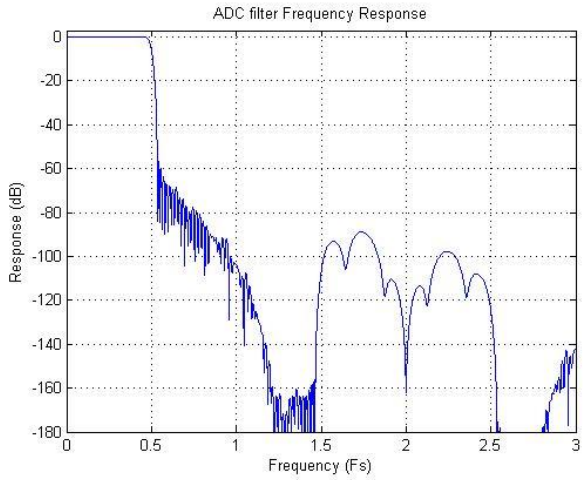


Figure 45: DAC Filter Frequency Response

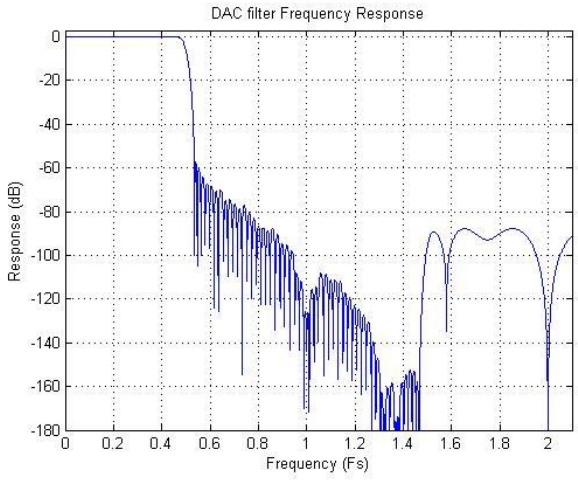


Figure 46: ADC Filter Frequency Response

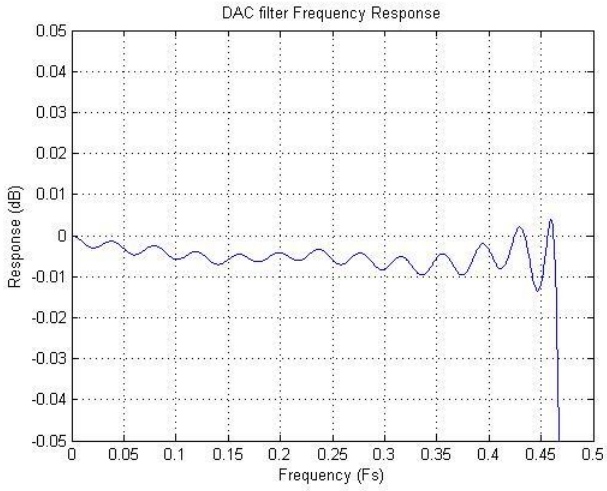


Figure 47: DAC Filter Ripple

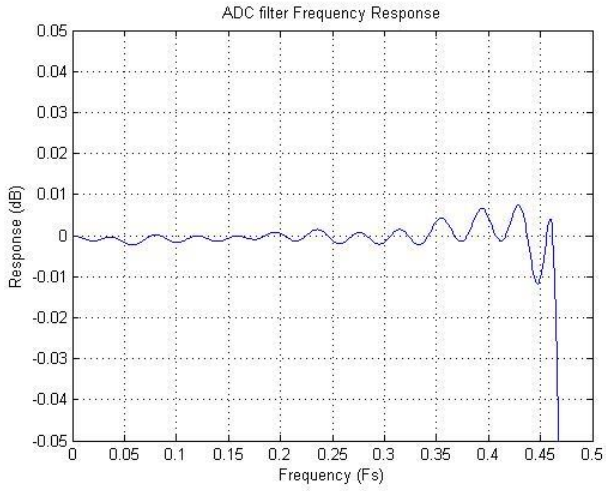


Figure 48: ADC Filter Ripple

# 7. APPLICATION CIRCUIT

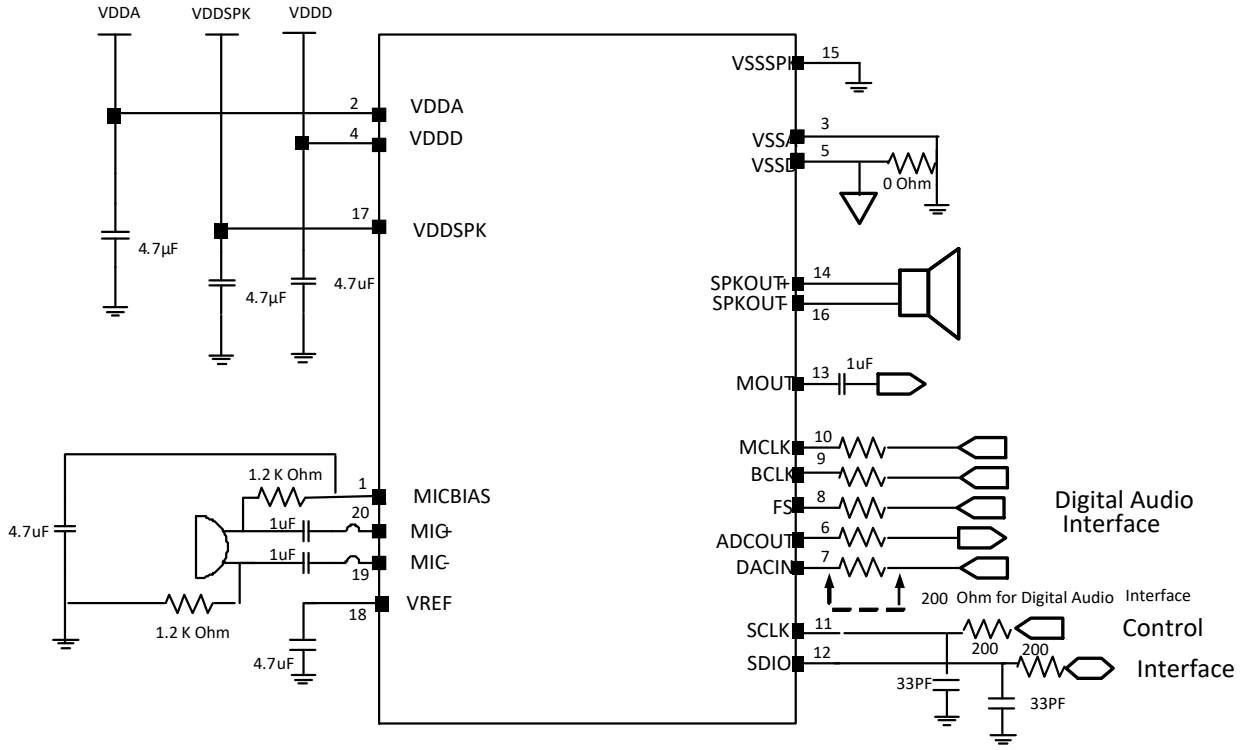


Figure 49: Application Diagram For 20-Pin QFN

Note 1: All non-polar capacitors are assumed to be low ESR type parts, such as with MLC construction or similar. If capacitors are not low ESR, additional 0.1uF and/or 0.01uF capacitors may be necessary in parallel with the bulk 4.7uF capacitors on the supply rails.

Note 2: Load resistors to ground on outputs may be helpful in some applications to insure a DC path for the output capacitors to charge/discharge to the desired levels. If the output load is always present and the output load provides a suitable DC path to ground, then the additional load resistors may not be necessary. If needed, such load resistors are typically a high value, but a value dependent upon the application requirements.

Note 3: To minimize pops and clicks, large polarized output capacitors should be a low leakage type.

Note 4: Depending on the microphone device and PGA gain settings, common mode rejection can be improved by choosing the resistors on each node of the microphone such that the impedance presented to any noise on either microphone wire is equal.

Note 5: SCLK and SDIO are added a low pass filter to prevent glitch; the corner frequency is 8MHz to 33Mhz.

## 8. PACKAGE DIMENSION

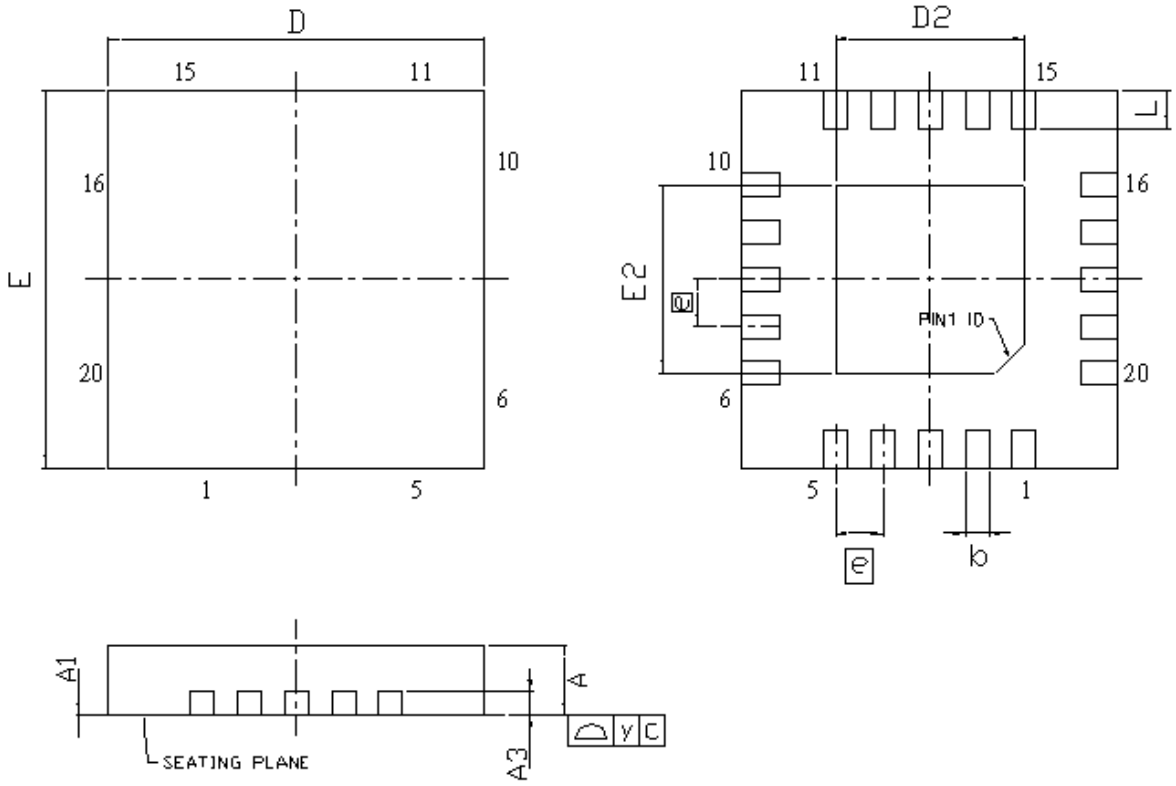


Controlling Dimension :Millimeters

| SYMBOL | DIMENSION (MM) | | | DIMENSION (Inch) | | |
|---|---|---|---|---|---|---|
| | MIN. | NOM. | MAX. | MIN. | NOM. | MAX. |
| A | 0.70 | 0.75 | 0.80 | 0.02756 | 0.02953 | 0.03150 |
| A1 | 0 | 0.02 | 0.05 | 0 | 0.0079 | 0.00197 |
| A3 | 0.203 REF | | | 0.0079 REF | | |
| b | 0.18 | 0.25 | 0.30 | 0.00709 | 0.00984 | 0.01181 |
| D | 3.90 | 4.00 | 4.10 | 0.1535 | 0.1575 | 0.1614 |
| D2 | 1.90 | 2.00 | 2.10 | 0.0748 | 0.0787 | 0.0827 |
| E | 3.90 | 4.00 | 4.10 | 0.1535 | 0.1575 | 0.1614 |
| E2 | 1.90 | 2.00 | 2.10 | 0.0748 | 0.0787 | 0.0827 |
| e | 0.50 BSC | | | 0.01969 BSC | | |
| L | 0.30 | 0.40 | 0.50 | 0.01181 | 0.01574 | 0.01969 |
| y | 0.08 | | | 0.00315 | | |

Note:D2,E2 by die size difference .

# 9. ORDERING INFORMATION

| Part Number | Dimension | Package | Package Material |
|---|---|---|---|
| NAU88C10YG | 4x4 mm | QFN-20 | Green |

NAU88C10 _ _

**Package Material:**

**G = Green Package (Halogen-free, RoHS-compliant) & TSCA-compliant**

**Package Type:**

**Y = QFN-20**

# 10. REVISION HISTORY

| REVISION | DATE | DESCRIPTION |
|---|---|---|
| 1.0 | Jan, 2016 | Initial Release |
| 1.1 | Aug, 2016 | Update Revision ID |
| 1.2 | Mar, 2017 | Add power consumption table for various applications |
| 1.3 | Nov, 2017 | Update PLL integers range from 6-12 to 5-13 |
| 1.4 | Feb,2018 | Remove 0x3[5], 0x5[5]<br>Add ALC description |
| 1.5 | Mar, 2018 | Add Damping resistors for I2S, low pass filter for I2C in typical application diagram |
| 1.6 | Sep, 2019 | Add 0x45[5] SPKMOUT<br>Add Differential output configuration |
| 1.7 | Sep 13, 2022 | Update Junction Temperature information |
| 1.8 | Jan 10, 2023 | Update Table 24 |
| 1.9 | Feb 1, 2023 | Update Halogen-free, RoHS-compliant and TSCA-compliant description |
| 2.0 | Oct 30, 2023 | Update $T_{DOD}$ description |
| 2.1 | Mar 19, 2024 | Update Companding register information<br>Update Control Interface Timing description |
| 2.2 | Aug 29, 2024 | Update NAU88C10 description<br>Update Format |
| 2.3 | Jan 16, 2025 | Update Format |

# IMPORTANT NOTICE

**Nuvoton Products are neither intended nor warranted for usage in systems or equipment, any malfunction or failure of which may cause loss of human life, bodily injury or severe property damage. Such applications are deemed, "Insecure Usage".**

**Insecure usage includes, but is not limited to: equipment for surgical implementation, atomic energy control instruments, airplane or spaceship instruments, the control or operation of dynamic, brake or safety systems designed for vehicular use, traffic signal instruments, all types of safety devices, and other applications intended to support or sustain life.**

**All Insecure Usage shall be made at customer's risk, and in the event that third parties lay claims to Nuvoton as a result of customer's Insecure Usage, customer shall indemnify the damages and liabilities thus incurred by Nuvoton.**

*Please note that all data and specifications are subject to change without notice.*
*All the trademarks of products and companies mentioned in this datasheet belong to their respective owners.*