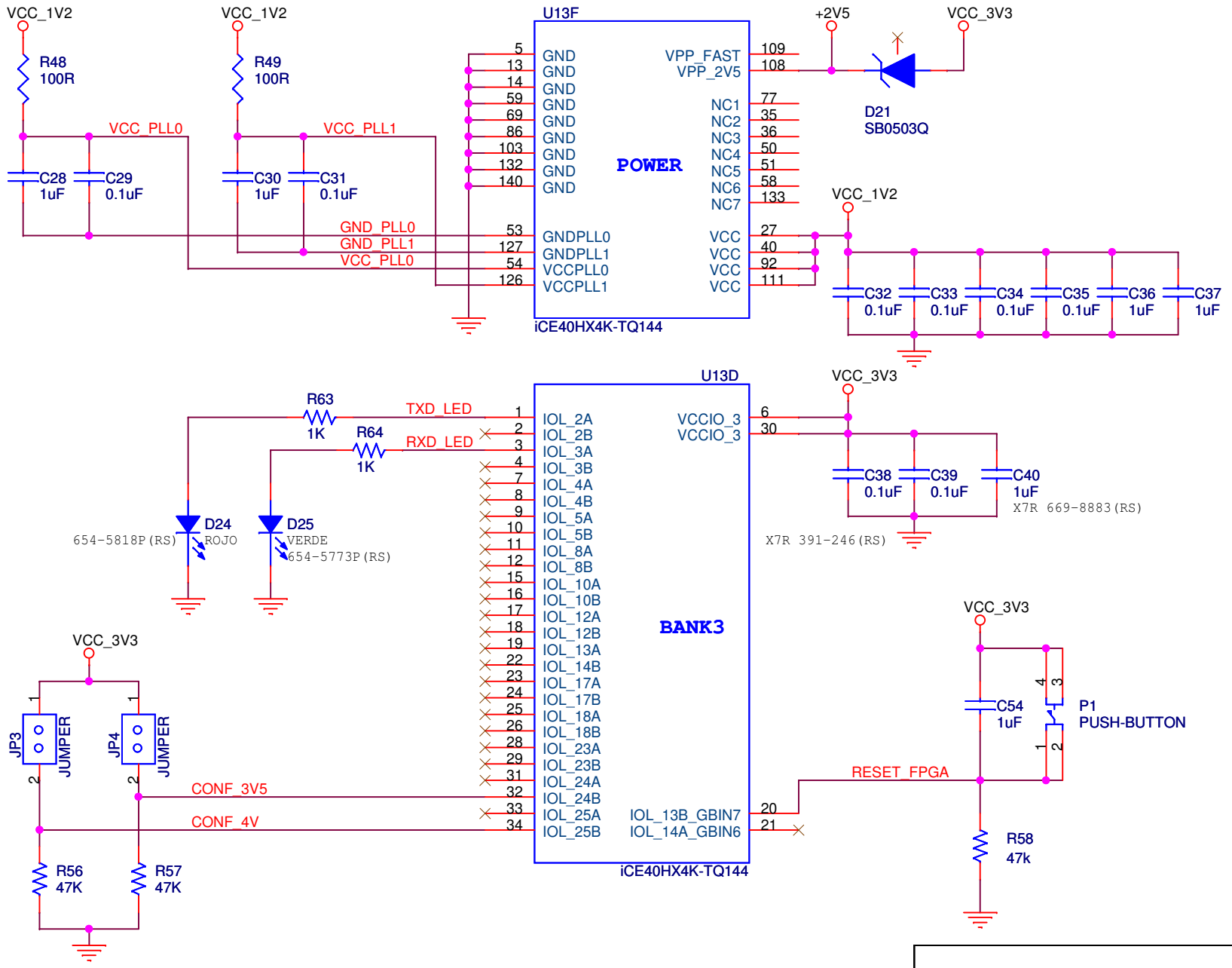

Title	FPGA - POWER	
Size A	Document Number CONTBee BOARD	Rev V1.0
Date: Wednesday, August 30, 2017	Sheet 8 of 8	