M-BUS TO UART

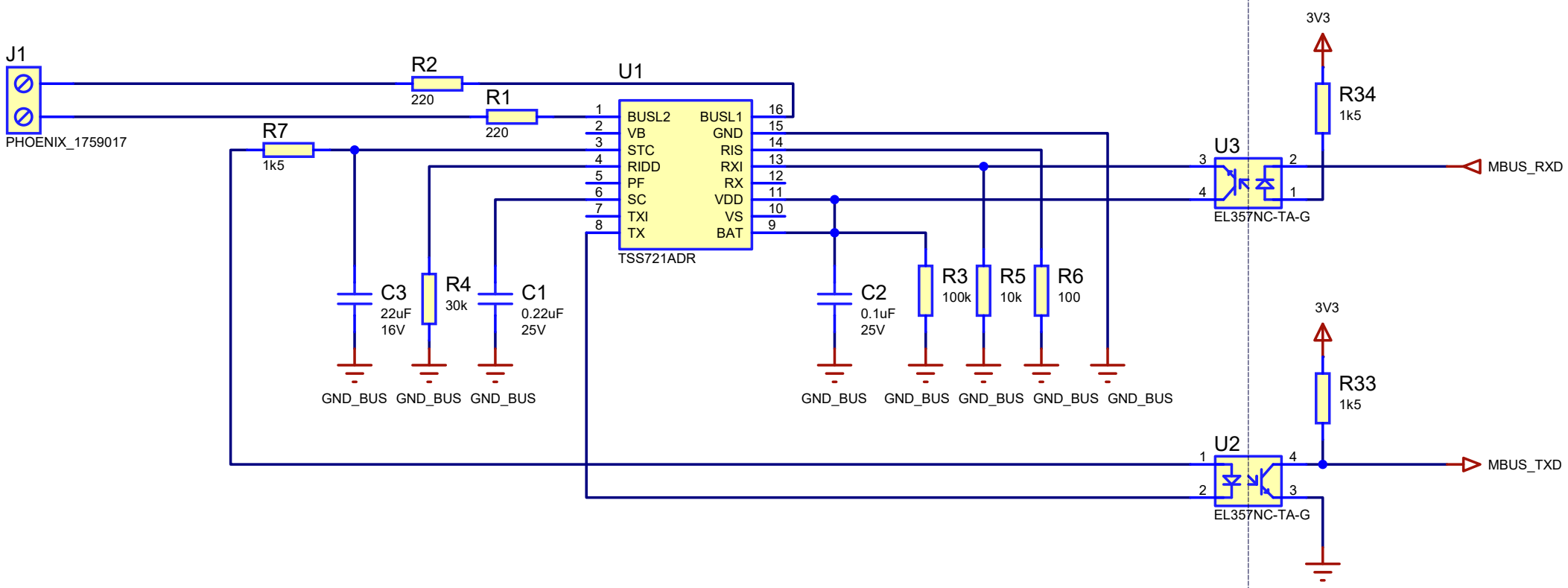

FILE NAME: smartmeter_logger.pdsprj	DATE: 25.06.2022
DESIGN TITLE: ESP Smartmeter Logger	PAGE: 1 of 5
SHEET: M-Bus Input	
DRAWN BY: FW REV: 0.1	TIME: 21:02:43

USB-to-UART

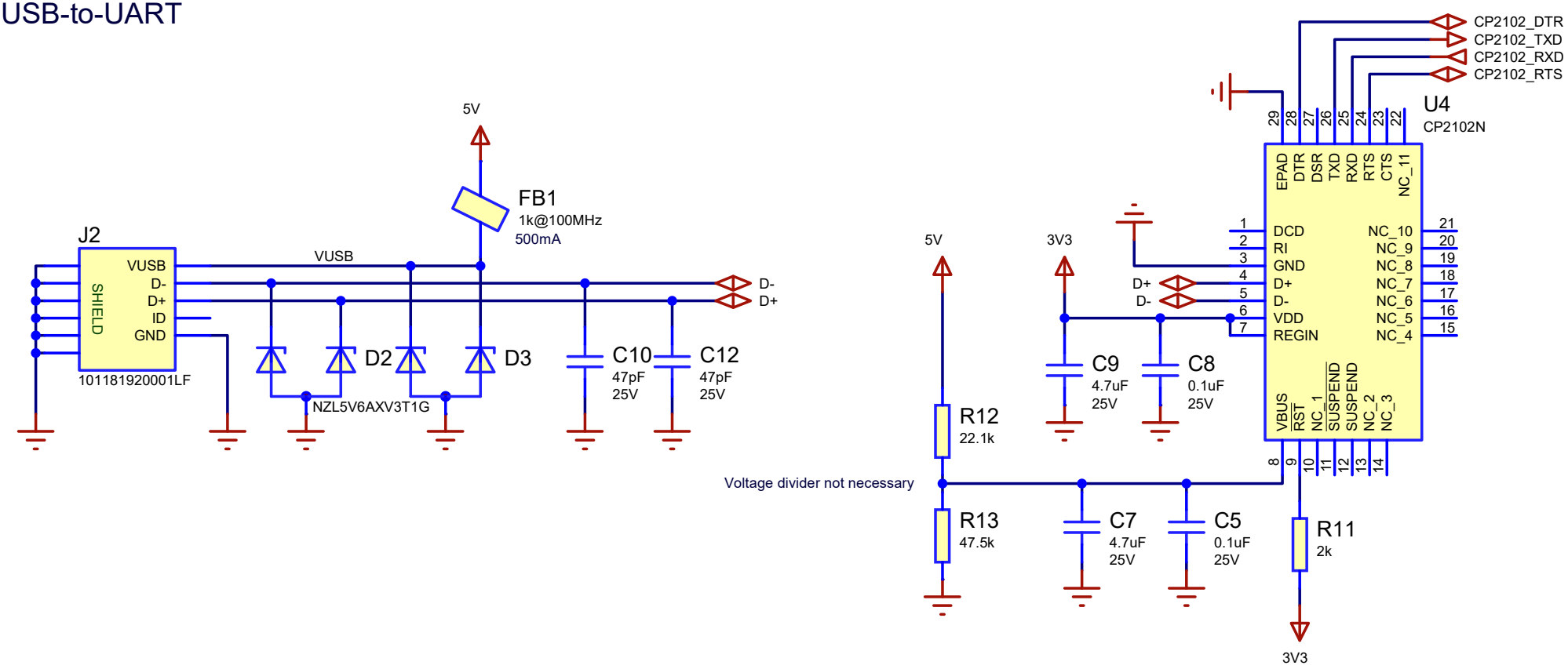

3V3 POWER

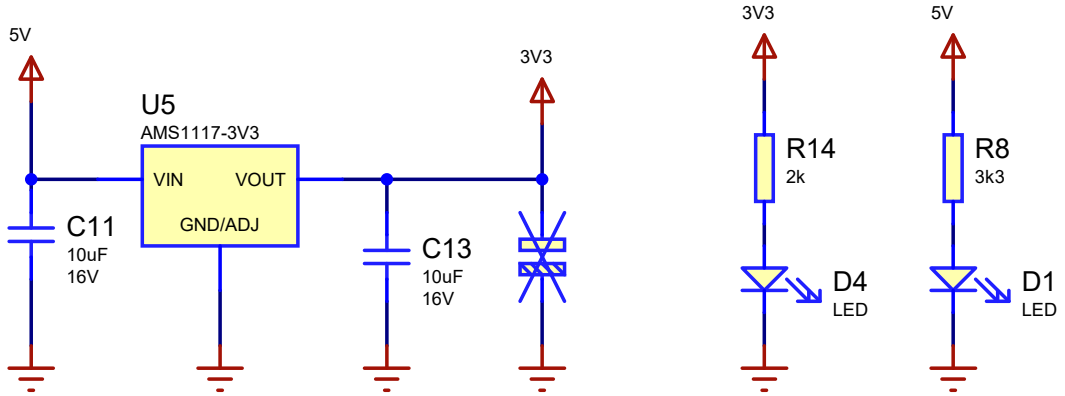

FILE NAME: smartmeter_logger.pdsprj	DATE: 25.06.2022
DESIGN TITLE: ESP Smartmeter Logger	PAGE: 2 of 5
SHEET: USB + Power	
DRAWN BY: FW	REV: 0.1
	TIME: 21:02:43

ESP32-S

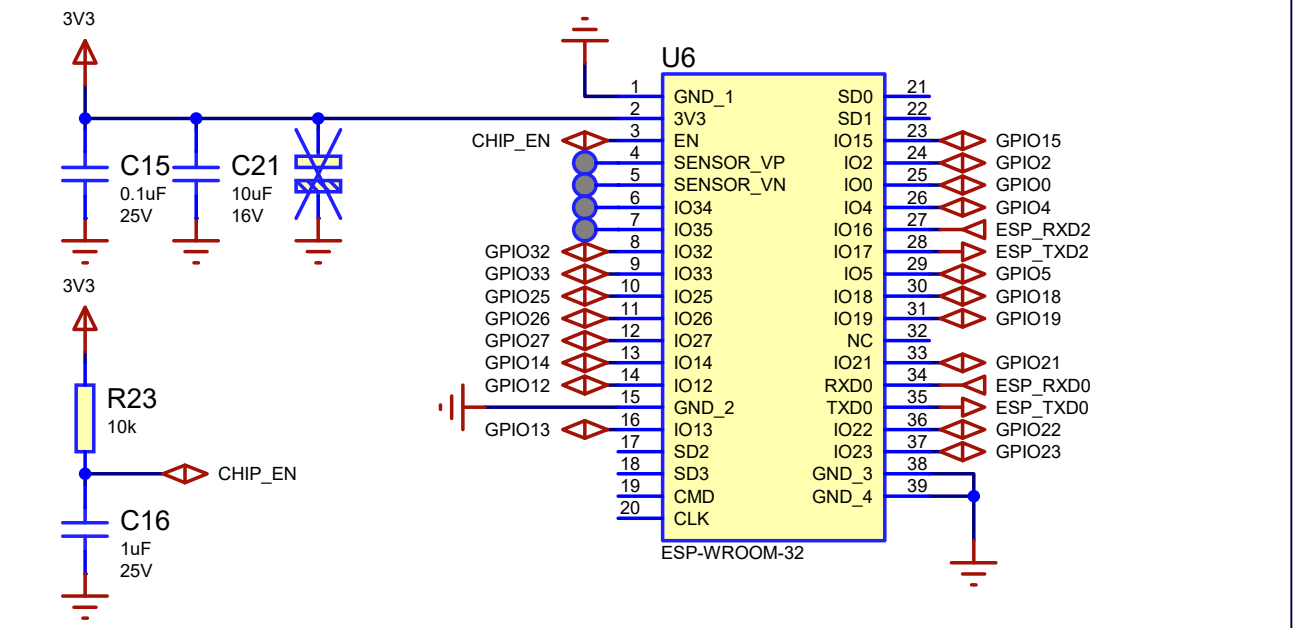

MBUS COMMUNICATION

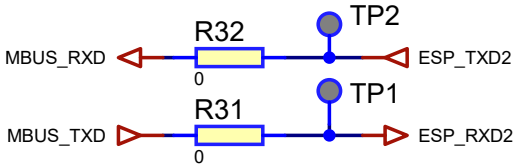

USB<->ESP COMMUNICATION

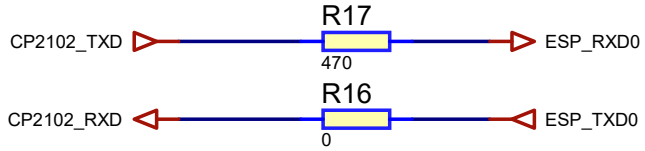

BUTTONS

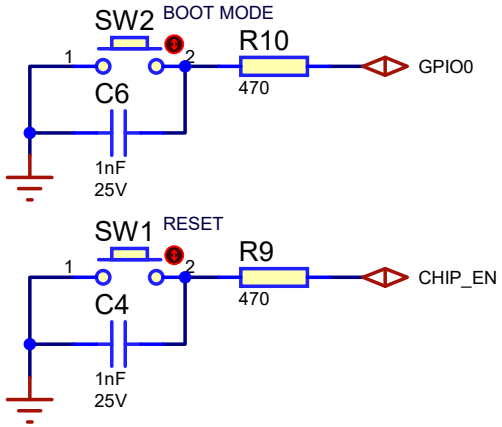

Auto programming

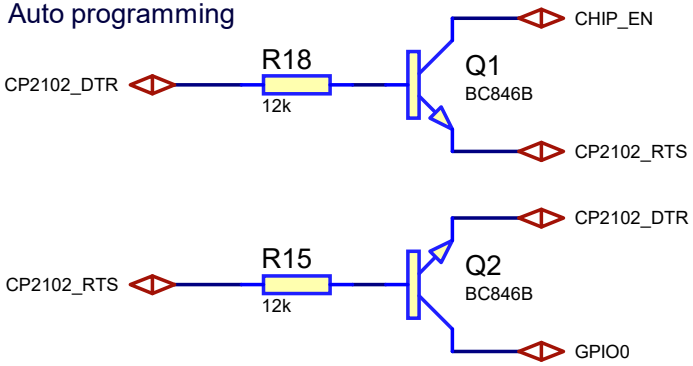

GPIO'S

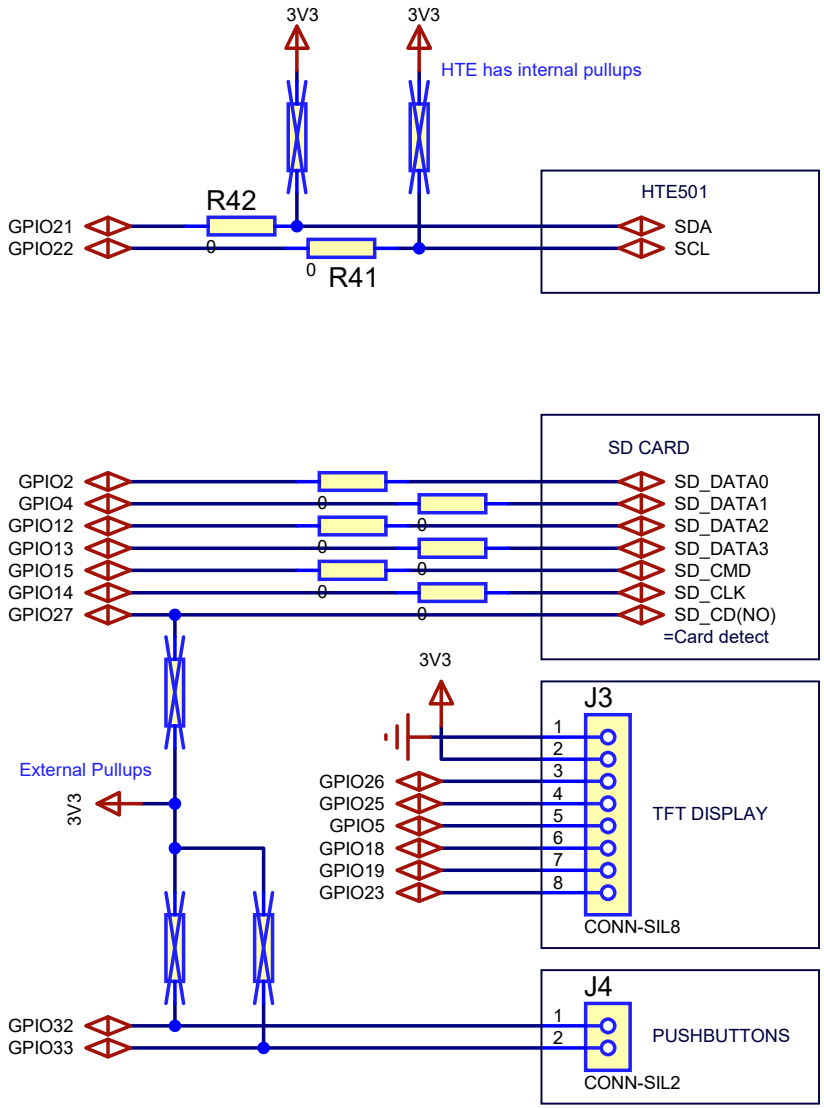

FILE NAME: smartmeter_logger.pdsprj	DATE: 25.06.2022
DESIGN TITLE: ESP Smartmeter Logger	PAGE: 3 of 5
SHEET: ESP32	
DRAWN BY: FW	REV: 0.1
	TIME: 21:02:43

SD CARD

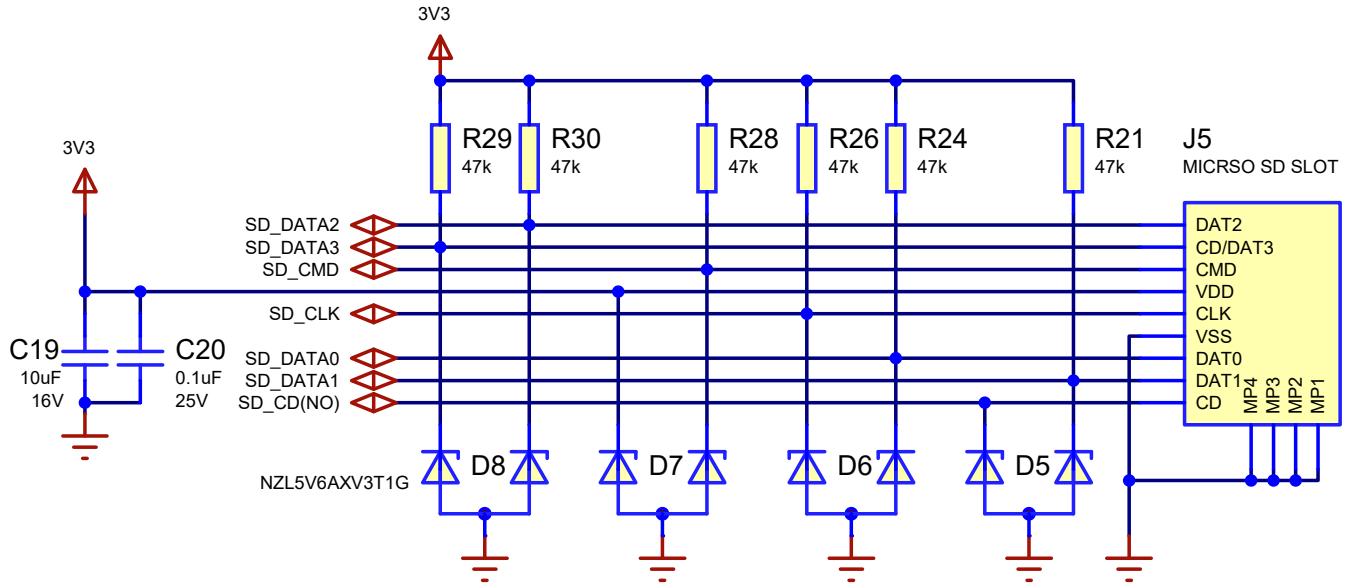

HUMIDITY & TEMPERATURE SENSOR HTE501

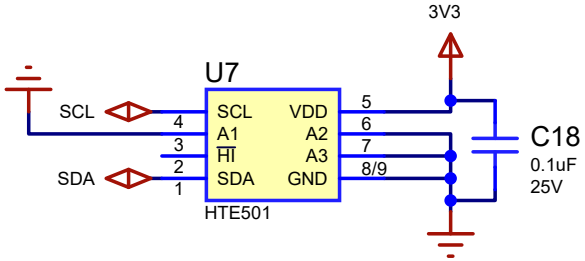

FILE NAME: smartmeter_logger.pdsprj	DATE: 25.06.2022
DESIGN TITLE: ESP Smartmeter Logger	PAGE: 4 of 5
SHEET: Peripherals	
DRAWN BY: FW REV: 0.1	TIME: 21:02:43

PUSHBUTTONS

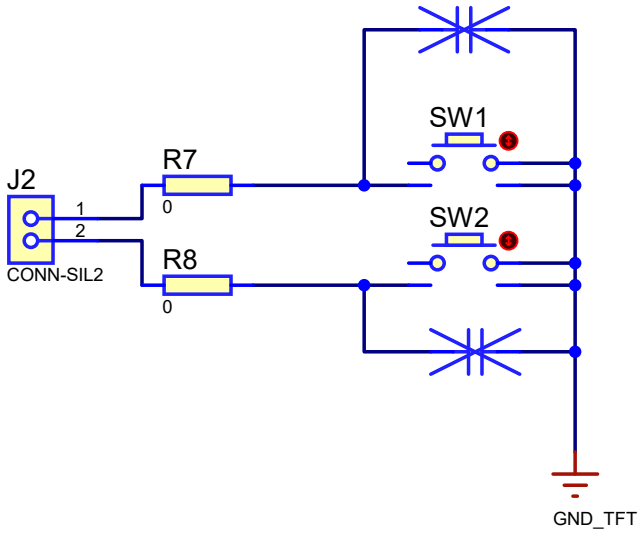

1.77" TFT DISPLAY

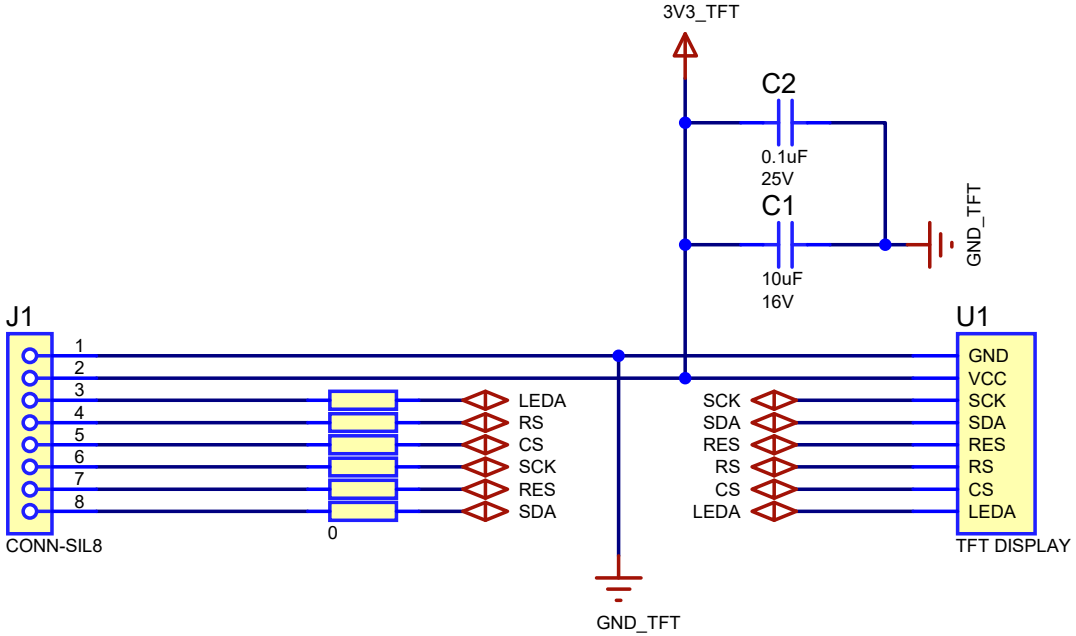

FILE NAME: smartmeter_logger.pdsprj	DATE: 25.06.2022
DESIGN TITLE: ESP Smartmeter Logger	PAGE: 5 of 5
SHEET: Display	
DRAWN BY: FW REV: 0.1	TIME: 21:02:43