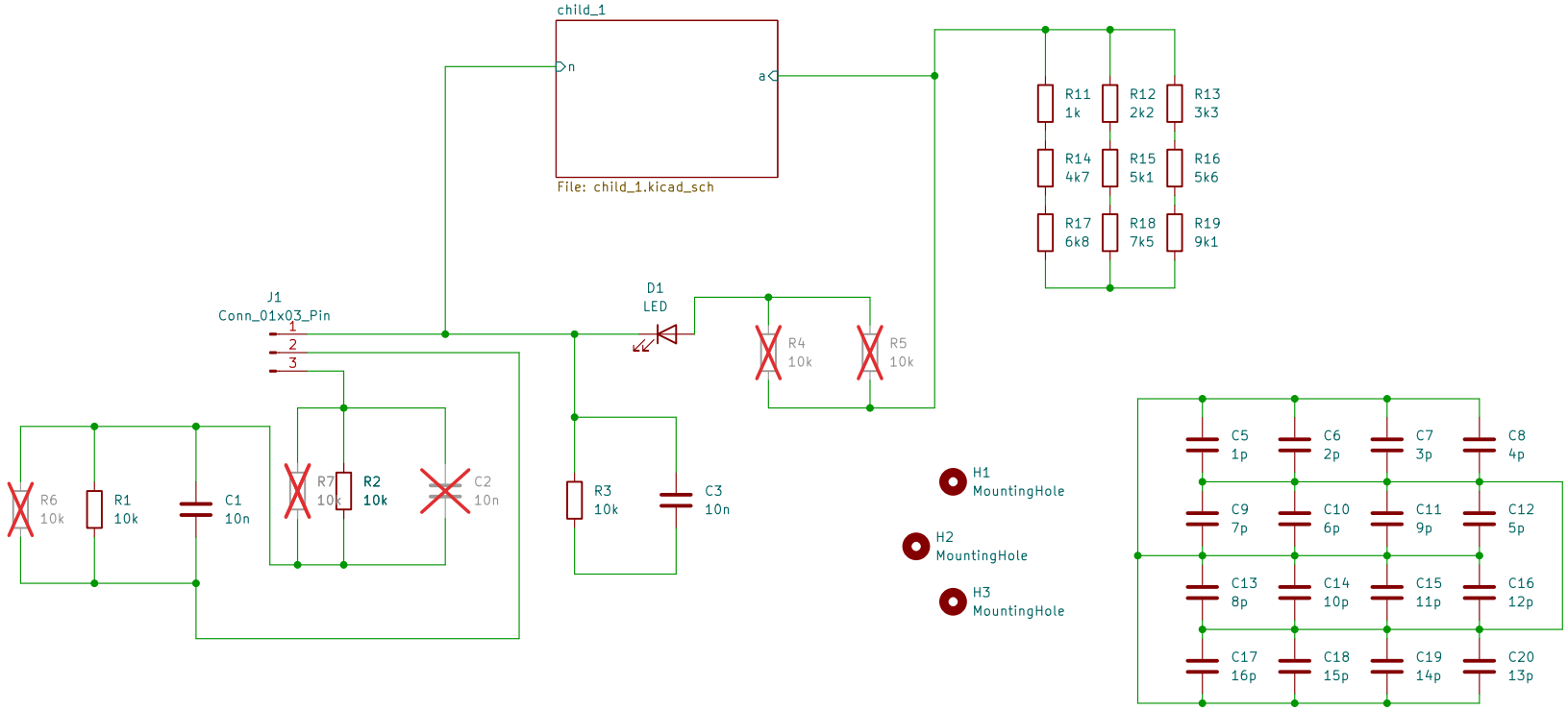

FELIRO ENGINEERING	**PROJNAME**	Sheet: Root File: ktest.kicad_sch
	Notes This is a comment 1 field - potentially not used This is a comment 2 field - potentially not used This is a comment 3 field - potentially not used This is a comment 4 field - potentially not used	Rev: 0.0.1 / Drwn: FLR Mat: Concept / Rev'd: FLR Date: 2026-10-06 / Rls'd: FLR Dwg: NA / Size: A4 Generated with KiCad / Page: 1/2

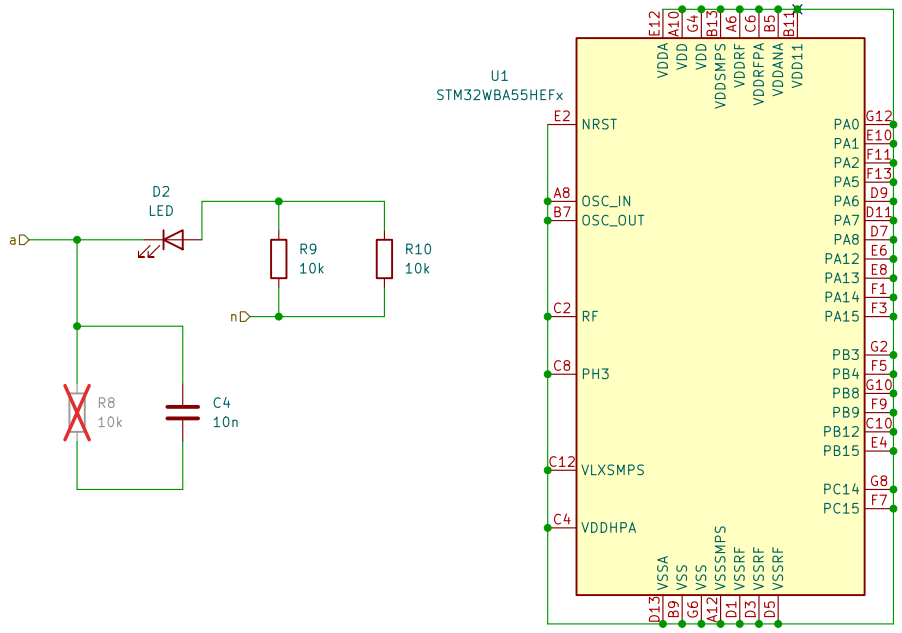

FELIRO ENGINEERING	**PROJNAME**	Sheet: child_1
		File: child_1.kicad_sch
	Notes	Rev:
		Mat: Concept
		Date:
		Drwn: FLR
		Rev'd: FLR
		Rls'd: FLR
		Dwg: NA
		Size: A4
		Generated with KiCad
		Page: 2/2