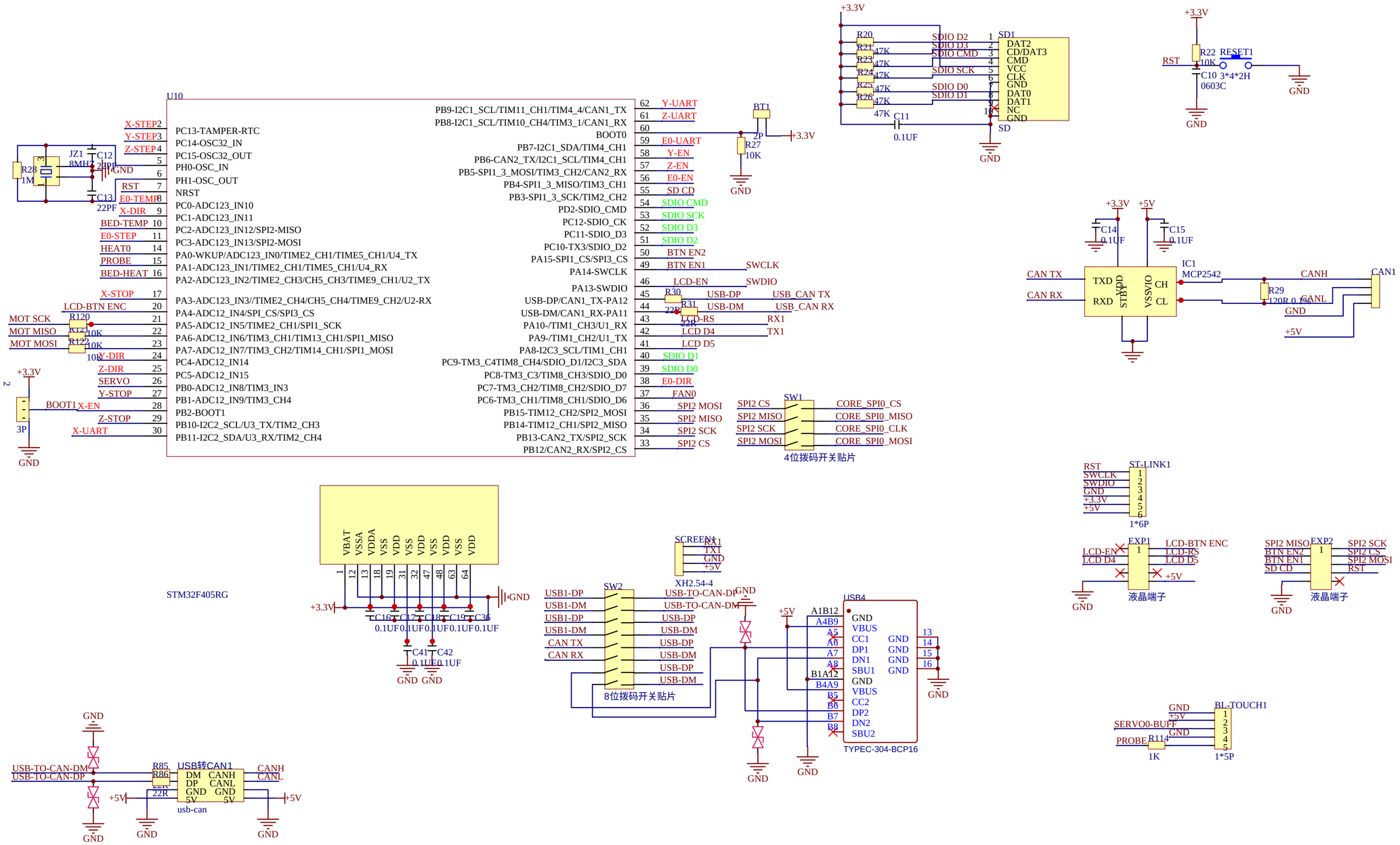

TITLE: STM MCU	REV: 1.0
Company: Flymaker/Mellow	Sheet: 1/5
Date: 2021-12-09 Drawn By: jay_s_uk	

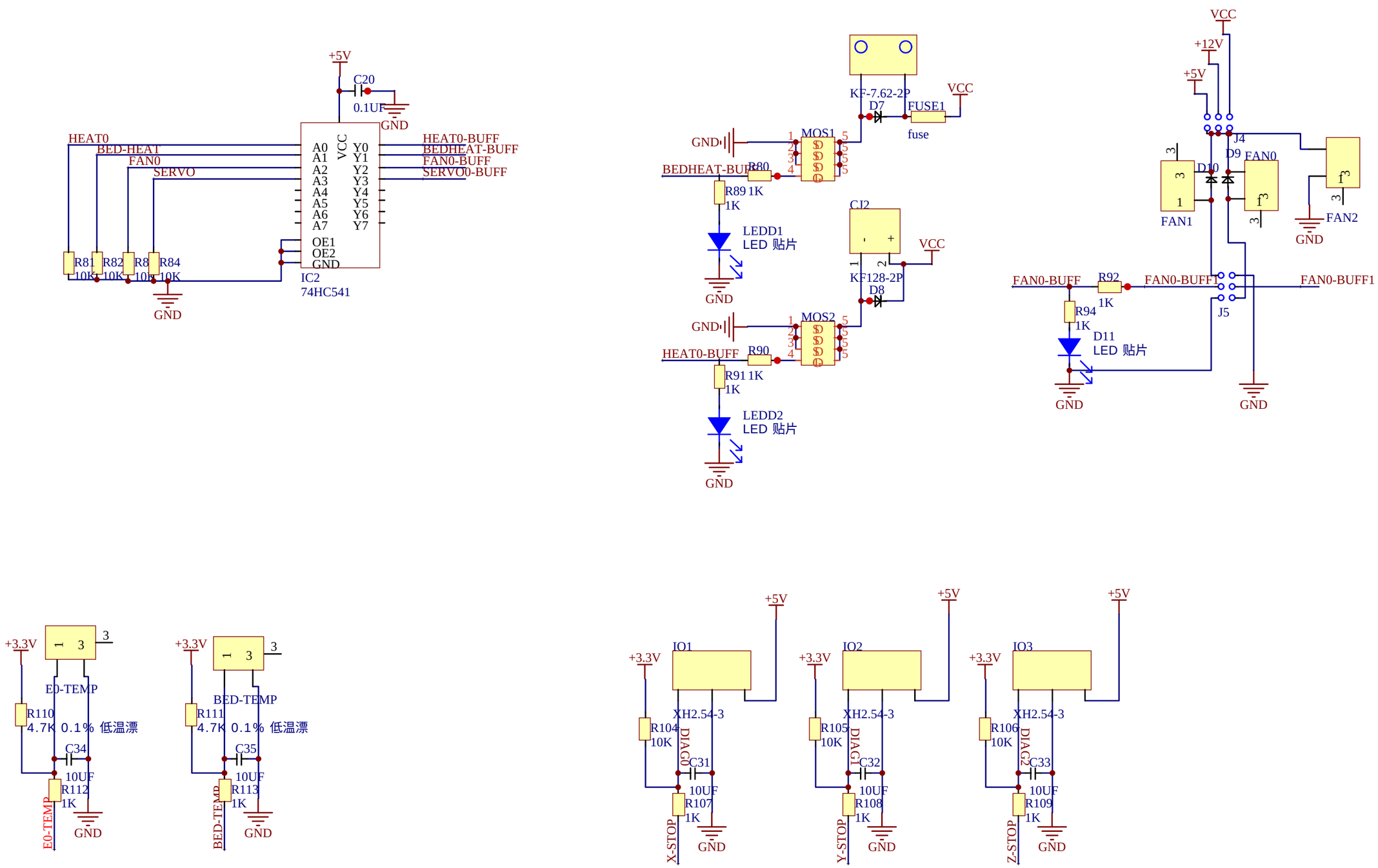

TITLE: Heaters and Fans	REV: 1.0
Company: Flymaker/Mellow	Sheet: 2/5
Date: 2021-12-09 Drawn By: jay_s_uk	

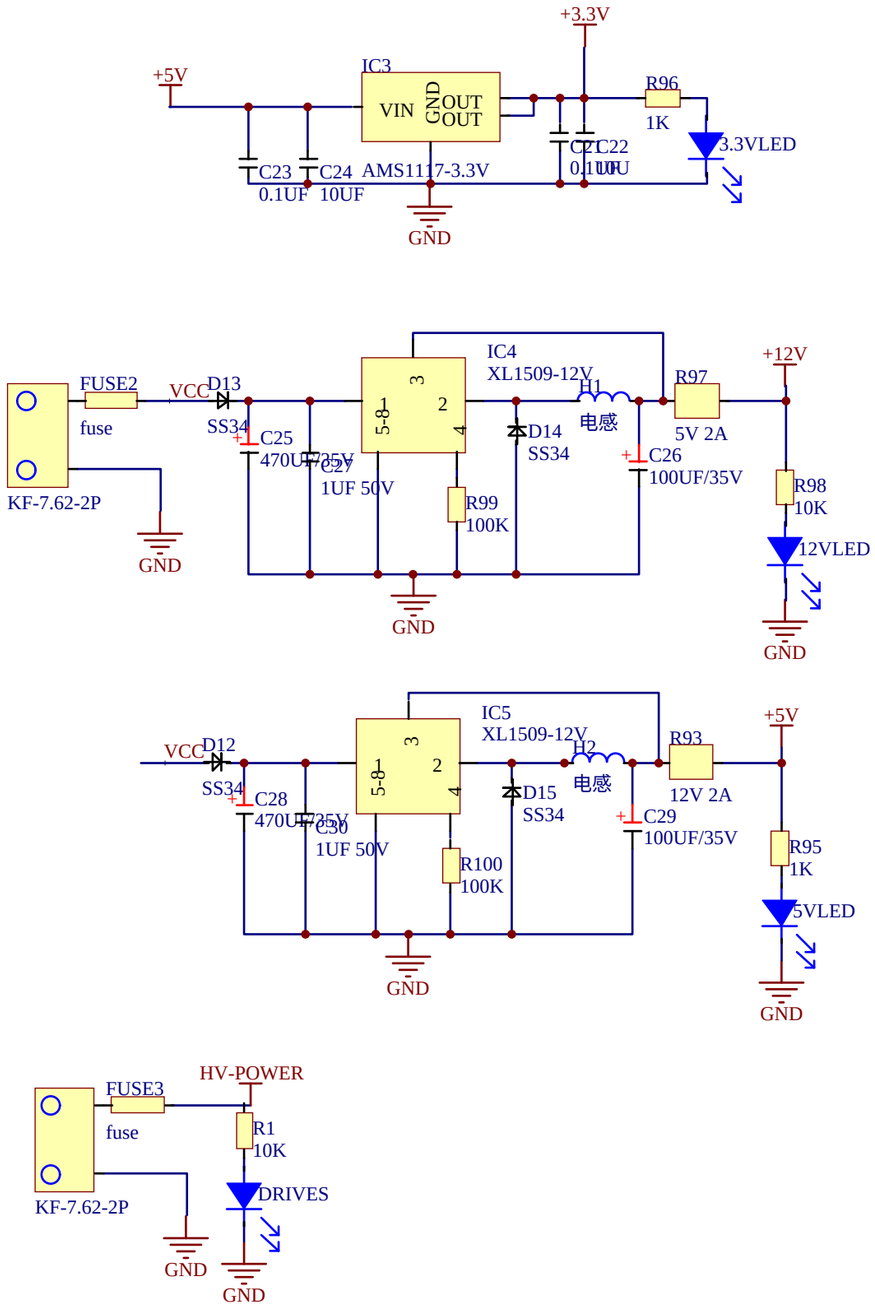

TITLE: Power		REV: 1.0
	Company: Flymaker/Mellow	Sheet: 3/5
	Date: 2021-12-09 Drawn By: jay_s_uk	

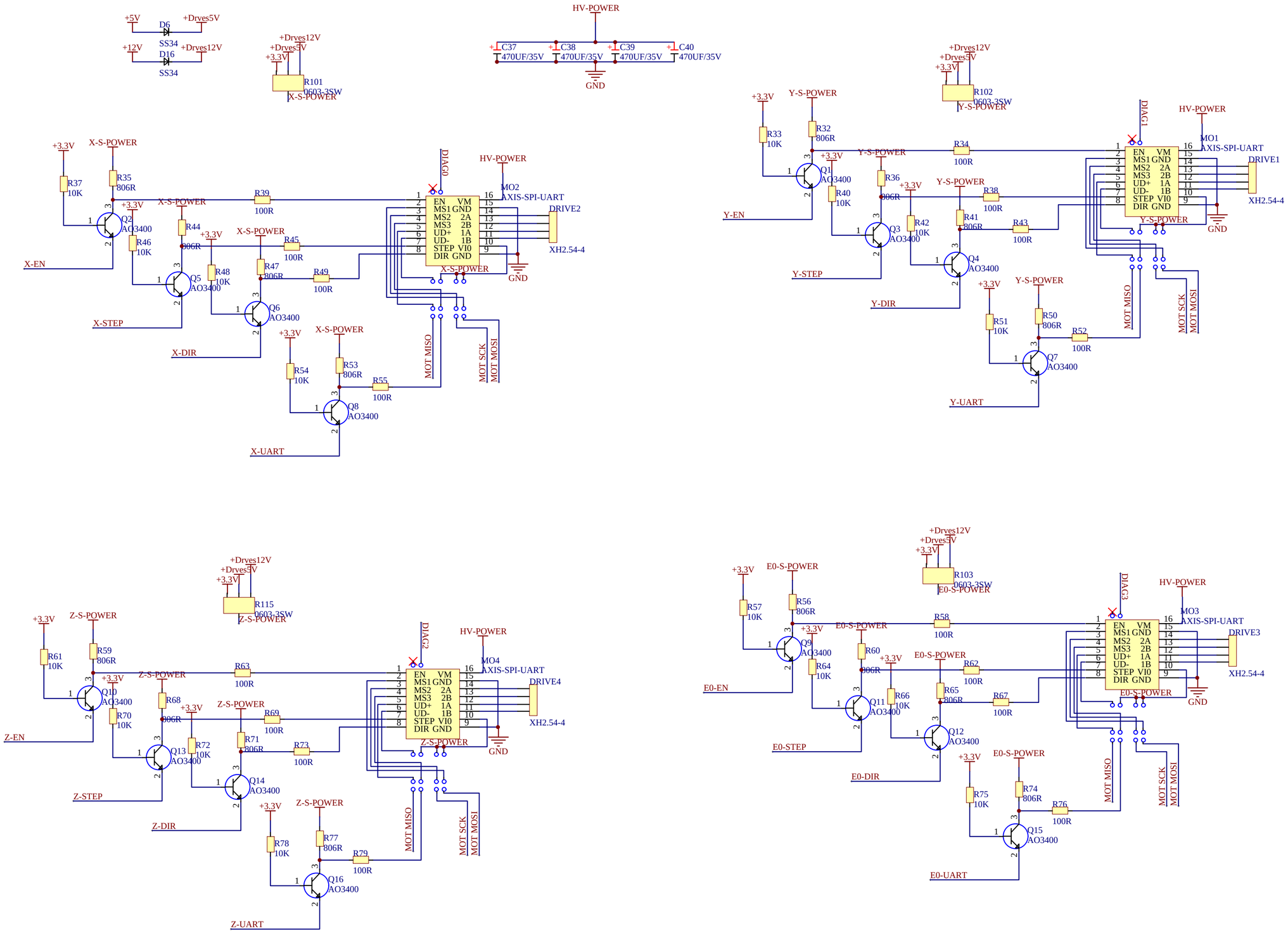

TITLE: Drivers	REV: 1.0
Company: Flymaker/Mellow	Sheet: 4/5
Date: 2021-12-09 Drawn By: jay_s_uk	

CORE

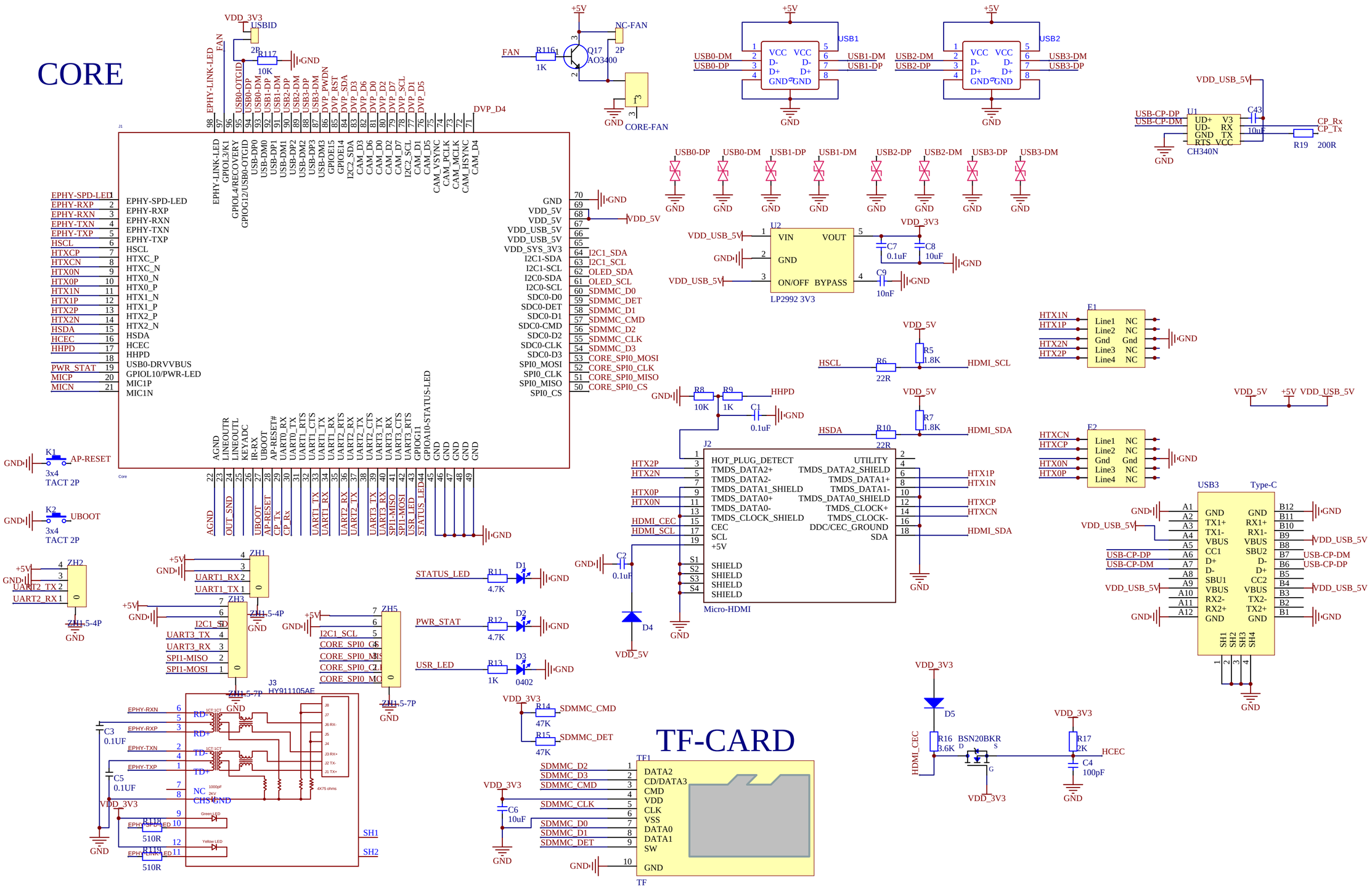

TF-CARD

TITLE: Core MCU	REV: 1.0
Company: Flymaker/Mellow	Sheet: 5/5
Date: 2021-12-09	Drawn By: jay_s_uk