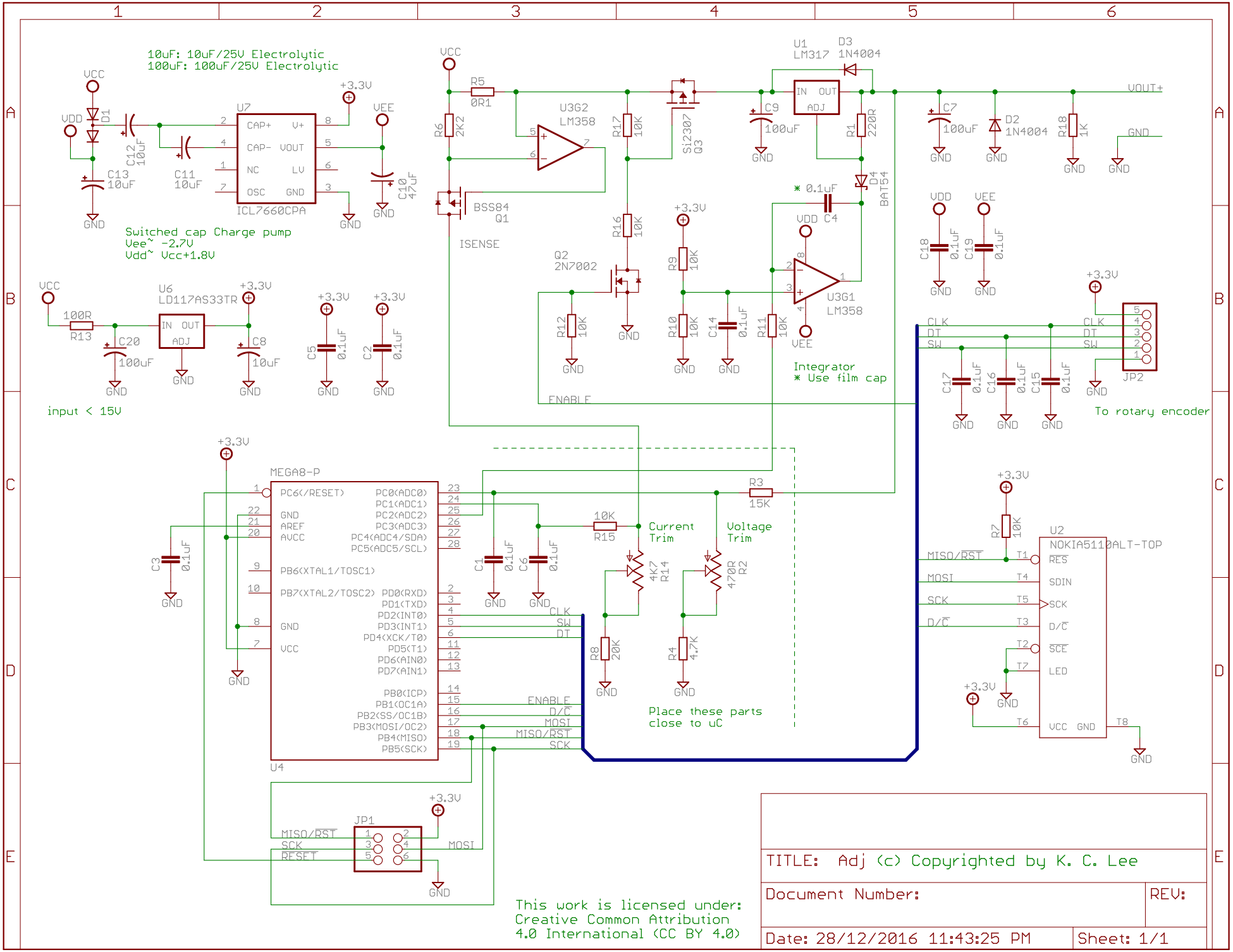
10uF: 10uF/25V Electrolytic
100uF: 100uF/25V Electrolytic
Switched cap Charge pump
Vee~ -2.7V
Vdd~ Vcc+1.8V
ICL7660CPA
U7
CAP+ V+ CAP- VOUT NC LV OSC GND
C11 10uF
C12 10uF
C13 10uF
C10 47uF
D1
VCC
VDD
VEE
+3.3V
GND
U6
LD117AS33TR
IN OUT ADJ
R13 100R
C20 100uF
C8 10uF
C5 0.1uF
C2 0.1uF
input < 15V
R5 0R1
R6 2K2
BSS84 Q1
ISENSE
U3G2 LM358
R17 10K
R16 10K
Si2307 Q3
Q2 2N7002
R12 10K
R9 10K
R10 10K
C14 0.1uF
R11 10K
U3G1 LM358
* 0.1uF C4
Integrator
* Use film cap
U1 LM317
D3 1N4004
C9 100uF
R1 220R
D4 BAT54
VOUT+
C7 100uF
D2 1N4004
R18 1K
C18 0.1uF
C19 0.1uF
JP2
CLK
DT
SW
C17 0.1uF
C16 0.1uF
C15 0.1uF
To rotary encoder
ENABLE
MEGA8-P
U4
PC6(/RESET)
GND
AREF
AVCC
PB6(XTAL1/TOSC1)
PB7(XTAL2/TOSC2)
PC0(ADC0)
PC1(ADC1)
PC2(ADC2)
PC3(ADC3)
PC4(ADC4/SDA)
PC5(ADC5/SCL)
PD0(RXD)
PD1(TXD)
PD2(INT0)
PD3(INT1)
PD4(XCK/T0)
PD5(T1)
PD6(AIN0)
PD7(AIN1)
PB0(ICP)
PB1(OC1A)
PB2(SS/OC1B)
PB3(MOSI/OC2)
PB4(MISO)
PB5(SCK)
C3 0.1uF
C1 0.1uF
C6 0.1uF
R3 15K
R15 10K
Current Trim
Voltage Trim
4K7 R14
470R R2
R8 20K
R4 4.7K
Place these parts close to uC
MISO/RST
MOSI
SCK
D/C
U2
NOKIA5110ALT-TOP
RES
SDIN
SCE
LED
VCC GND
R7 10K
JP1
RESET
This work is licensed under:
Creative Common Attribution
4.0 International (CC BY 4.0)
TITLE: Adj (c) Copyrighted by K. C. Lee
Document Number:
REV:
Date: 28/12/2016 11:43:25 PM
Sheet: 1/1