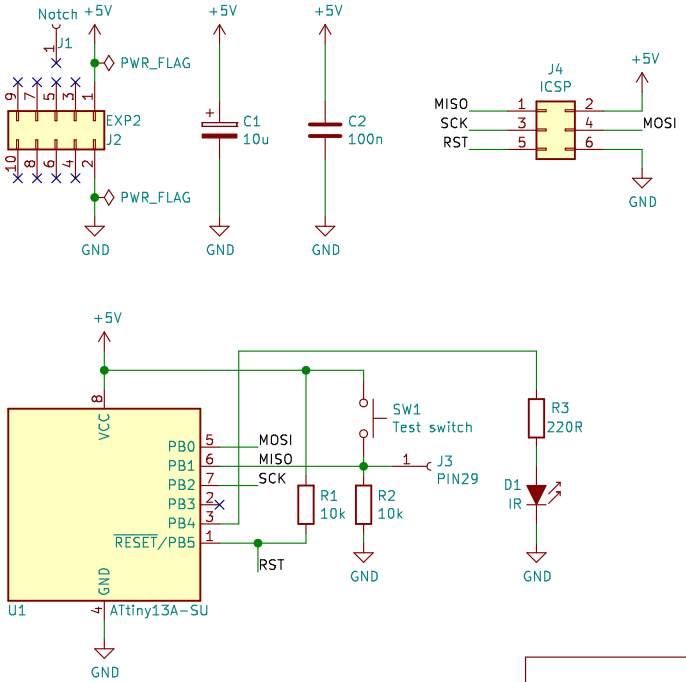

Filip Piórski

Sheet: /

File: attiny13ir.sch

Title: ATtiny13A IR single-button remote

Size: User	Date: 2020-09-19	**Rev: 0.2**
KiCad E.D.A. eeschema 5.0.2+dfsg1-1		Id: 1/1