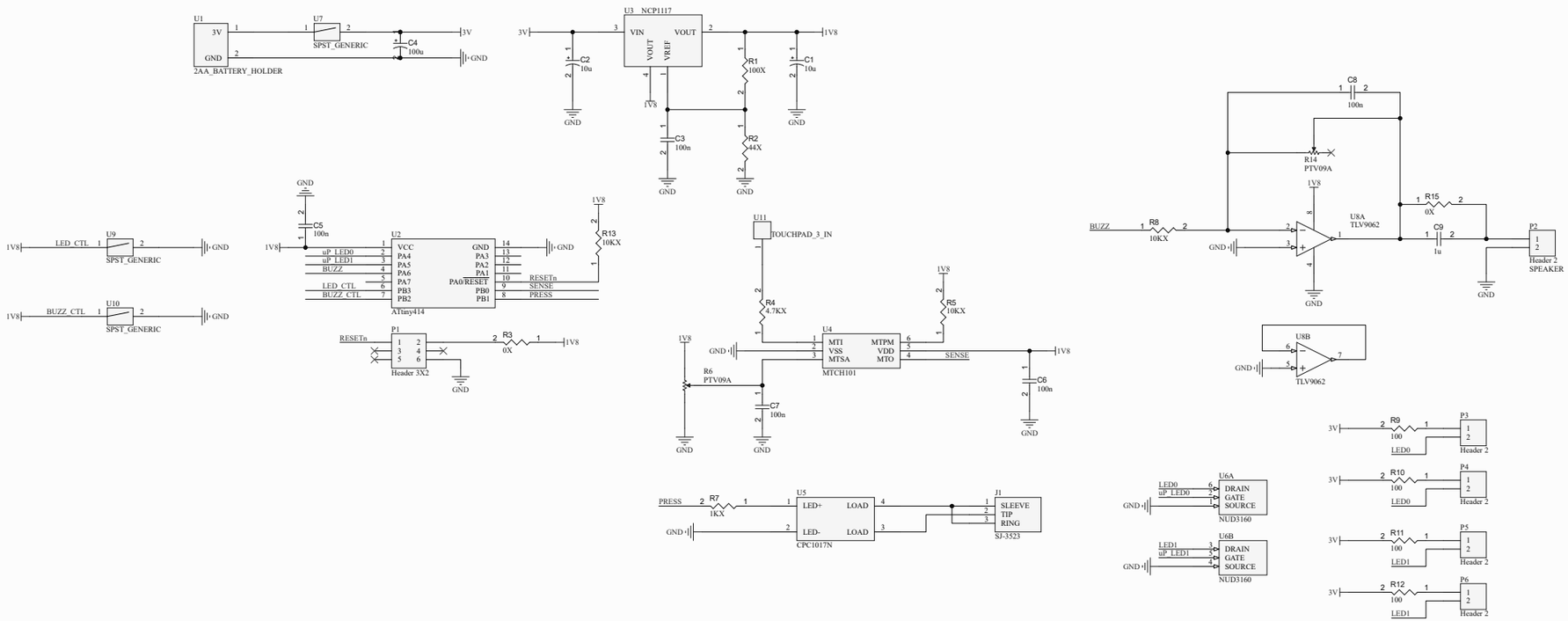

Title: Sensitive Touch / Sweet Tooth [st]		
Size: Legal	Number	Revision: 1.0
Date: 6/06/2024		Sheet of
File: C:\Users\..\st_v1.SchDoc		Drawn By: Jackson Fugate