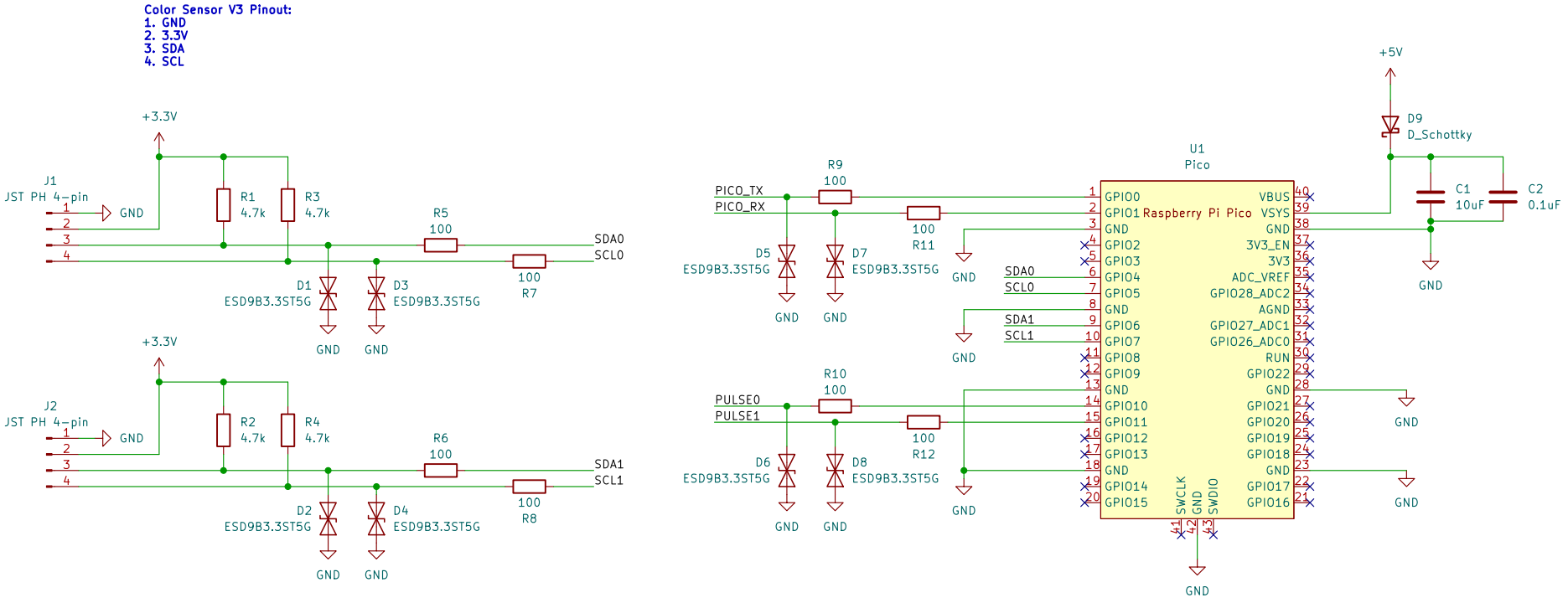

DIO15 / I2C SDA	34	33	+3.3V
DIO14 / I2C SCL	32	31	DIO10 / PWM6
DGND	30	29	DIO9 / PWM5
DGND	28	27	DIO8 / PWM4
DIO13 / PWM9	26	25	DIO7 / SPI MOSI
DGND	24	23	DIO6 / SPI MISO
DIO12 / PWM8	22	21	DIO5 / SPI CLK
DGND	20	19	DIO4 / SPICS
DIO11 / PWM7	18	17	DIO3 / PWM3
DGND	16	15	DIO2 / PWM2
UART.TX	14	13	DIO1 / PWM1
DGND	12	11	DIO0 / PWM0
UART.RX	10	9	AI3
DGND	8	7	AI2
AGND	6	5	AI1
AO1	4	3	AI0
AO0	2	1	+5V

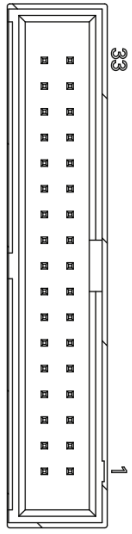

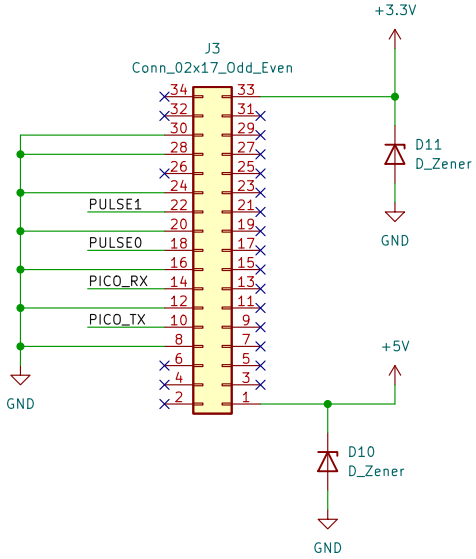

Sheet: /
File: MXPico.kicad_sch

Title: MXP Pi Pico I2C Breakout

Size: A4	Date:	Rev:
KiCad E.D.A. kicad (6.0.4)		Id: 1/1