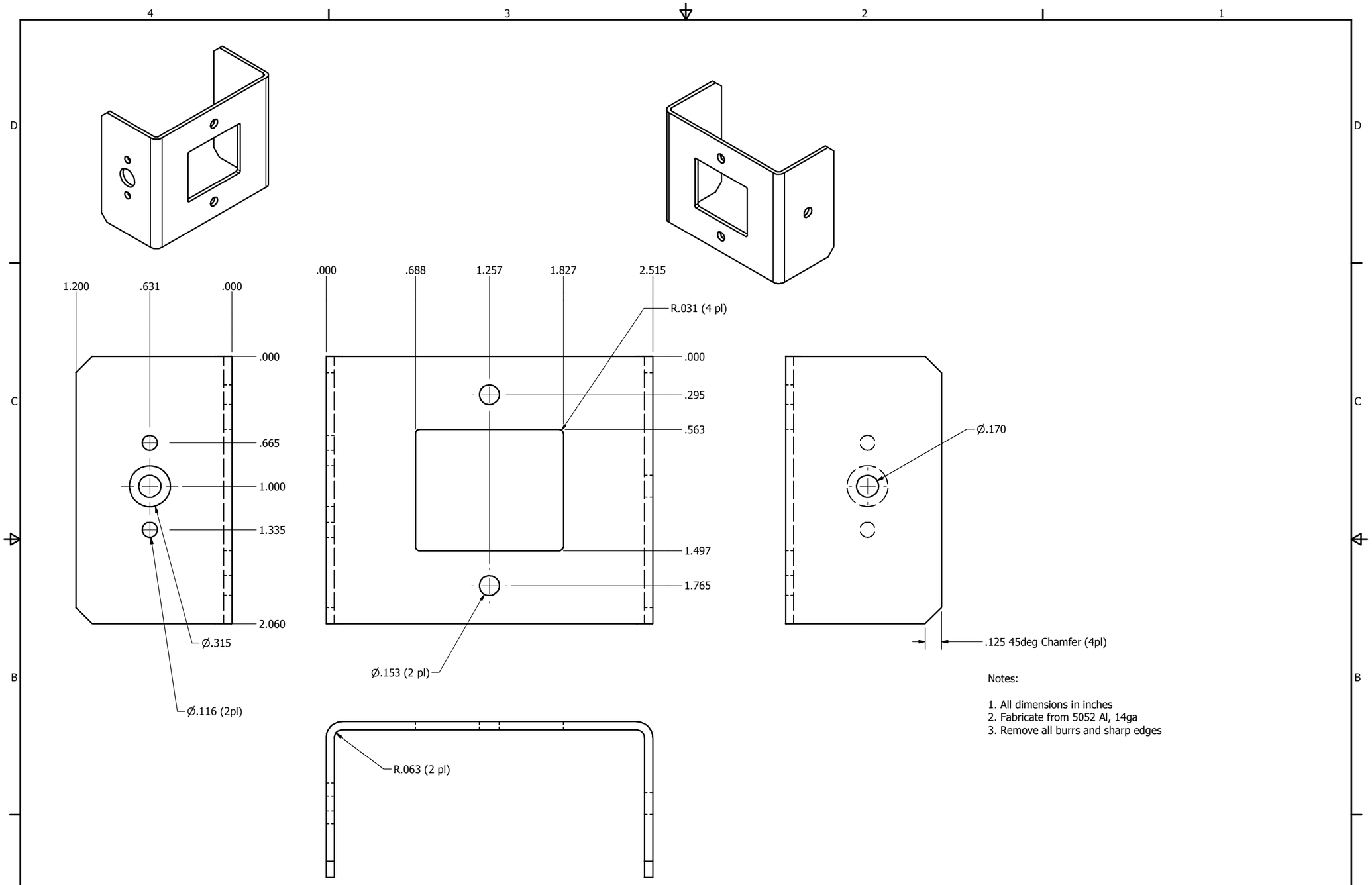

Notes:

1. All dimensions in inches
2. Fabricate from 5052 Al, 14ga
3. Remove all burrs and sharp edges

DRAWN narosenberg	10/29/2008	**FIRST** 200 Bedford Street, Manchester, NH 03101 (603) 666-3906 -- FAX (603) 666-3907
CHECKED		
UNLESS OTHERWISE SPECIFIED *TOLERANCES: (INCHES)*		TITLE Axis Case
FRAC.	+/- 1/32	
.00	+/- .01	SIZE C / DWG NO MI-00016 / REV
.000	+/- .005	
ANGULAR	+/- .25 Deg.	SCALE / SHEET 1 OF 1