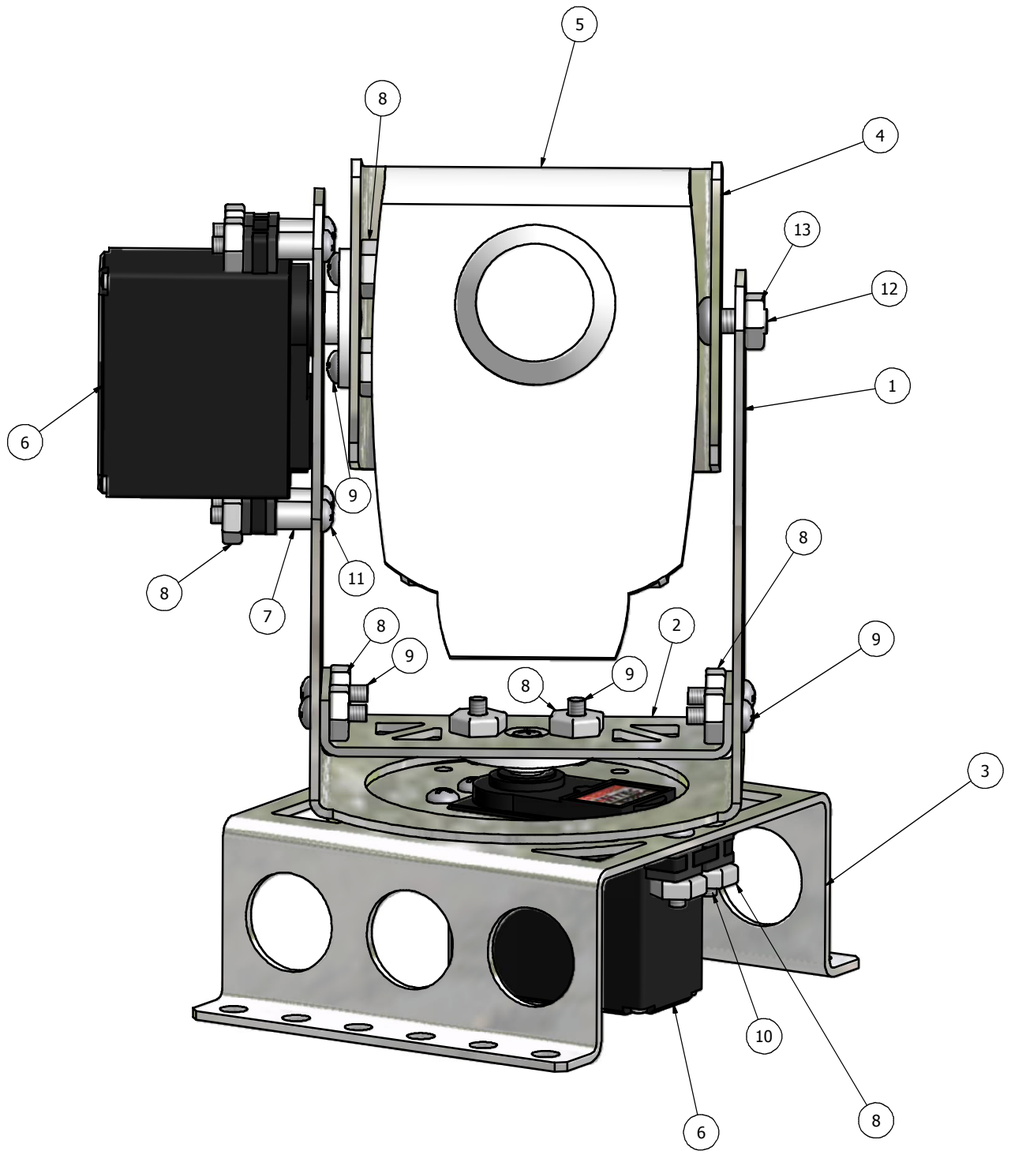

Parts List

ITEM	QTY	PART NUMBER	DESCRIPTION
1	1	MI_00013	Pan Plate
2	1	MI-00014	Pan Servo Brace
3	1	MI-00015	Pan Tilt Base
4	1	MI-00016	Axis Case
5	1	Camera	
6	2	Hitec Servo, Modified	
7	4	Spacer	1/4" Nylon Spacer
8	16	4-40 KEPS Nut	
9	8	4-40 x 3/8" Zinc Plated Screw	Cross Recessed Pan Head Machine Screw - Type II
10	4	4-40 x 1/2" Zinc Plated Screw	Cross Recessed Pan Head Machine Screw - Type II
11	4	4-40 x 3/4" Zinc Plated Screw	Cross Recessed Pan Head Machine Screw - Type II
12	1	8-32 x 3/8" Zinc Plated Screw	Cross Recessed Pan Head Machine Screw - Type II
13	1	8-32 NYLOCK Nut	

DRAWN narosenberg	10/31/2008
CHECKED	
UNLESS OTHERWISE SPECIFIED *TOLERANCES: (INCHES)*	
FRAC.	+/- 1/32
.00	+/- .01
.000	+/- .005
ANGULAR	+/- .25 Deg.

FIRST
200 Bedford Street, Manchester, NH 03101
(603) 666-3906 -- FAX (603) 666-3907

TITLE
Pan Tilt Assy

SIZE	DWG NO	REV
C	MI-00017	

SCALE

SHEET 1 OF 1