Section 4

ROBOT TRANSPORTATION

TABLE OF CONTENTS

4. ROBOT TRANSPORTATION 3

4.1. OVERVIEW 3

4.2. BATTERY SHIPMENT 3
4.2.1. Shipping via FedEx Express 3
4.2.2. Shipping via FedEx Freight 3

4.3. INSTRUCTIONS FOR ASSEMBLING AN "INNER BATTERY BOX" 4

4.4. CRATE INFORMATION 5
4.4.1. Crate Construction Specifications and Construction Suggestions 5
4.4.1.1. All Crates MUST: 5
4.4.1.2. All crates should: 5
4.4.1.3. Crate building cautions: 5
4.4.2. Crate Limit 5
4.4.3. Crate Labeling 5

4.5. INTERNATIONAL SHIPMENTS AND CUSTOMS 6

4.6. ROBOTS SHIPPING ACROSS A U.S. BORDER 6
4.6.1. Wood packaging laws/restrictions 6
4.6.2. Exemptions 6
4.6.3. Related Web sites 7
4.6.4. Rules 7

4.7. SHIPPING AND DRAYAGE DEFINITIONS 8

4.8. VISUAL DEPICTION OF SHIPPING / DRAYAGE PROCESS 9

4.9. SHIPPING YOUR ROBOT 10
4.9.1. Robots MUST Ship Through the Drayage System 10
4.9.1.1. Exception Application Process 10
4.9.1.2. Exception Stipulations 10
4.9.2. Shipping to Your Initial Event 10

4.10. VERIFYING INITIAL CRATE(S) SHIPMENT 11
4.10.1. Verification Mailing Address 12
4.10.2. Crate Shipment Deadlines 12
4.10.2.1. Crate Delivery Deadlines 12
4.10.3. Event to Event Shipping - Two Choices 12

4.10.4. Consecutive Weekends 12

4.11. THE FEDEX DONATION 13
4.11.1. NEW FOR 2009! Shipping Within the 48 Contiguous U.S. States – FedEx Freight 13
4.11.2. Shipping Into and Out of the 48 Contiguous U.S. States – FedEx Express 14
4.11.3. Shipments the FedEx Donation Does Not Cover 15
4.11.4. Weigh the Donation Value 15

4.12. SHEPARD EXPOSITION SERVICES FREIGHT QUOTES 15

4.13. DRAYAGE 16
4.13.1. The Drayage Companies: Functions and Services 16
4.13.2. Drayage Company Regulations 16
4.13.3. Freight Overage 17
4.13.3.1. Accepted Payment Forms for Shepard: 17
4.13.3.2. Immediate On-site Weight Complaint Resolution 17
4.13.4. Weight and Rates Structure 18
4.13.4.1. Drayage Costs - *FIRST* 18
4.13.4.2. Drayage Costs - Teams 18
4.13.5. Outbound Shipments from the Drayage Terminal 18
4.13.6. Shepard Exposition Services Bill of Lading 19

4.14. TRACK YOUR CRATE 19

4.15. WE JUST QUALIFIED FOR THE CHAMPIONSHIP 20
4.15.1. What do we do? Is there a Decision Deadline? 20
4.15.2. Undecided? 20
4.15.3. We Changed our Minds 21

4. ROBOT TRANSPORTATION

4.1. OVERVIEW

This section provides information regarding crate specifications, shipping and associated requirements, the drayage system, and an introduction to the FedEx® donation. Please make sure those persons responsible for building and shipping your team's crate(s) understand and follow the guidelines for these processes.

4.2. BATTERY SHIPMENT

4.2.1. Shipping via FedEx Express

Teams shipping via FedEx Express (including International) will be permitted to ship batteries within their robot crate. Please note that the battery shipment must have "Non-spillable Batteries. Not restricted per A67" noted on the Commercial Invoice.

4.2.2. Shipping via FedEx Freight

Teams shipping via FedEx Freight (i.e. within the 48 contiguous U.S. States) will be permitted to ship batteries within the robot crate. Teams must make a notation on their Bill of Lading under "Description of Articles" that states - "Non-spillable Batteries. Not restricted per A67".

It is not mandatory that you ship your batteries with the robot, however if you choose to ship the 12VDC batteries in the crate with the robot, federal regulations require teams to follow the instructions below. If you do not adhere to these rules, your crate may not make it to the event(s).

If you include batteries, you must:

- Ship them inside their original box or carton packaging.
- Use the Styrofoam covering with protective caps to cover the battery terminals.
- Secure the boxed batteries inside the "inner battery box" section of the robot crate in an upright position. The photograph below shows a sample of an inner battery box built to comply with regulations. Remember to label this box…see below

a) **NO** batteries are to remain mounted on the robot! (Connected or not)

a) If you ship your batteries with your robot, you must use the battery labels, **"NON-SPILLABLE BATTERY"** on all four facing sides of the crate. Find the label provided in the web site Events area, "Shipping / Drayage" section.

b) Mark the inner battery box with the battery labels also. It too **MUST** be marked **"NON-SPILLABLE BATTERY"** in 1" or larger letters on 2 sides of the battery box.

4.3. INSTRUCTIONS FOR ASSEMBLING AN "INNER BATTERY BOX"

Bill of Materials

Item #	Part Description	Material	Dimensions	Qty
1	Box walls	½" plywood	8" x 8½"	4
2	Box bottom	½" plywood	9" x 10"	1
3	Box top	½" plywood	8" x 9"	1
4	Fasteners	Staples *or* drywall screws	1¼"	16
5	Base fasteners	Staples *or* drywall screws	1¼"	4
6	Lid fasteners	Drywall screws	1¼"	4

Attach the box walls to the box bottom and to each other using the fasteners, spaced approximately as shown in Figure 1.

Install the box into your crate. Use the exposed 1" lip of the box bottom to secure the box to the crate using four more fasteners. Place fasteners approximately as shown in Figure 2.

Put your batteries in the box (Don't forget to use the original packaging and styrofoam).

Secure the box top. Use 4 fasteners, positioned approximately as shown in Figure 3.

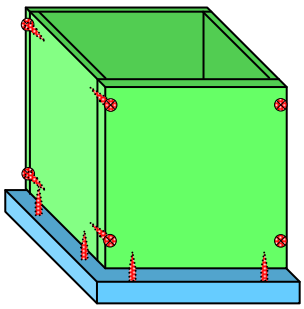

Figure 1: Assemble box walls to box bottom and to each other

Figure 2: Install the battery box in crate.

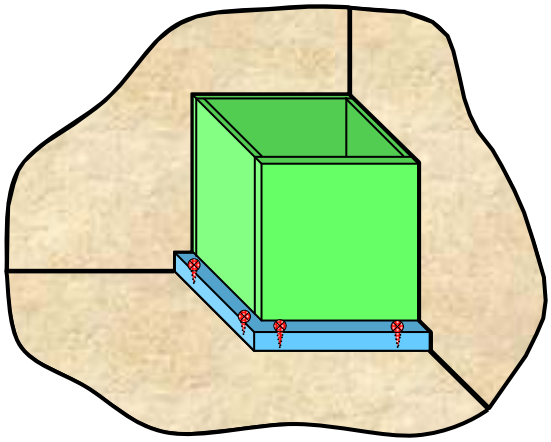

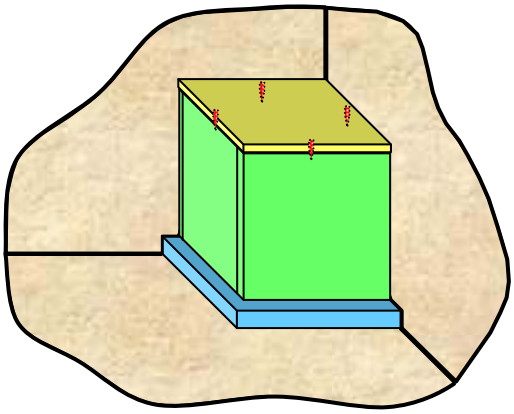

Figure 3: Attach box top to box.

4.4. CRATE INFORMATION

Build your crate so it is sturdy and falls within height and weight parameters when packed for shipment. Adhere to crate specifications and cautions. The Drayage Company determines whether a crate meets the size and weight criteria and will pass non-conforming crate information to *FIRST*.

> If a crate exceeds size specifications, or is poorly constructed, *FIRST* will not guarantee its security or delivery to the site. The Drayage Company will round up to the next hundredweight if a crate exceeds 400 pounds, and will charge accordingly. For specific information, refer to the *FIRST* Web site and choose your event, then "Shipping / Drayage" www.usfirst.org/frc_regional_events

4.4.1. Crate Construction Specifications and Construction Suggestions

Build your crate(s) with more than one shipment and season in mind. Remember to consider the weight of your materials.

4.4.1.1. All Crates MUST:

1. Comply with the "Wood Materials Regulations Across U.S. Borders" section below if the crate ships into the U.S.
2. "Sit" on 2 pieces of 4" by 4" lumber, spaced at least 28" apart so it can be moved by a forklift.
3. Have a footprint no greater than 4' by 4' and be no taller than 5'10" (70") high. This maximum includes the 4" by 4" lumber mentioned above.
4. Be constructed so it can withstand stacking during transport.
5. Weigh 400 pounds or less when loaded to avoid drayage overage charges.

SAFETY NOTE: Don't pack all safety glasses because you will need them when uncrating!

4.4.1.2. All crates should:

a. Be sturdily built to prevent damage to your equipment.

b. **Be constructed of** 3/8" or 1/2" plywood or 3/8" or 1/2" Oriented Strand Board (OSB), a solid panel product of consistent quality with no laps, gaps, or voids.

4.4.1.3. Crate building cautions:

a) Medium density fiberboard (MDF) is **not recommended** for crate building because the material makes crate construction too heavy. MDF can be dangerous to use if the correct safety precautions are not taken. MDF contains a substance called urea formaldehyde, which may be released from the material through cutting and sanding and cause irritation to the eyes and lungs.

b) **Don't use** particleboard because it collects moisture that adds weight and may cause the crate to fall apart. Remember, your crate may be exposed to the elements during truck loading and unloading.

4.4.2. Crate Limit

FIRST asks that each team ship only one crate, **but mandates that no more than two (2) crates ship for any team at any competition site.** This helps keep Pit entrances and aisles clear, safe, and less crowded**.** This restriction also keeps team costs down.

If you ship an extra crate, it should also meet the above specifications.
Teams pay all shipping and drayage costs for the additional crate.

4.4.3. Crate Labeling

Go to the web site www.usfirst.org/frc_regional_events

1. Obtain the printable, mandatory Consignee Address Labels from the "Shipping / Drayage" document for your event's drayage warehouse/terminal.
    - Fill in your team information on the address labels; make additional copies and attach one to each side of the 4 facing sides of the crate. This helps the shipper and the drayage company locate your crate at the warehouse and at the competition.
        - Refer to the "Robot Transportation" section of the web site for detailed labeling and shipping instructions - www.usfirst.org/frc_robot_shipping
    - Bring your completed outbound address labels to your event(s).
    - **If** you ship batteries with your robot, print 5 additional copies of the battery label, and tape one to each facing side of the crate. Also label 2 sides of the battery box.
2. Place a plastic "sleeve" on your crate, for insertion of an air waybill, if appropriate. A Bill of Lading does not require a one.
3. Repeat the above items for each event in which your team participates.

4.5. INTERNATIONAL SHIPMENTS AND CUSTOMS

1. Teams shipping to international events, and international teams shipping into the U.S. and back, should research Customs requirements weeks in advance.
2. *FIRST* strongly recommends using a Customs Broker so your team knows exactly what paperwork it needs to complete/supply to import and export your crate.
3. Comply with the Building Restrictions/Laws Regarding Wood Materials listed above.

4.6. ROBOTS SHIPPING ACROSS A U.S. BORDER

The above sections apply to all crates. Crates crossing a U.S. border have additional limits. Federal Rules apply to the crating and the pallets you will use to ship crates across U.S. Borders to FRC events. Please read and comply with the sections below.

4.6.1. Wood packaging laws/restrictions

The following regulation applies to any team planning to ship its robot into the U.S. from another country. Teams that do not comply risk having their robots detained at the U.S. border by U.S. Customs and not arriving at the event on time.

The U.S. Dept. of Agriculture has adopted international guidelines to decrease the potential for the introduction of certain plant pests that may accompany wood materials arriving from other countries. The crate construction and pallet guidelines stipulate that wood packing materials be either heat treated or fumigated with methyl bromide in accordance with applicable rules. These wood materials must have the approved international mark certifying treatment.

ALL IMPORTS (with certain exceptions) WILL BE DENIED ENTRY IF THEIR WOOD PACKING MATERIAL DOES NOT CONFORM TO THESE GUIDELINES AND MARKING REQUIREMENTS.

4.6.2. Exemptions

The following exemptions apply to the above wood packing material rules:

- Manufactured wood materials such as plywood, corrugated board, fiber board, veneer, whiskey and wine barrels and veneer;
- Pieces of wood less than 6 mm/0.24 inches in any dimension
- Sawdust, wood wool, wood shavings, produced as a result of sawing or shaving wood into small slender and curved pieces less than 6mm in all dimensions. Wood packing material made entirely from Canadian origin wood which is exempt from the treatment and marking requirements (An importer's statement *may* be required to document the origin of the wood packing material);
- Wood packaging material used for most Department of Defense shipments imported by either the Department or DOD contractors; and

- Firewood, mesquite wood for cooking and small, non commercial packages of unmanufactured wood for personal cooking or personal medicinal purposes coming directly from Mexican border states.

NOTE: U.S. origin wood packing material exported prior to fumigation **MAY NOT** be re-imported without first being treated overseas.

4.6.3. Related Web sites

a. Refer to http://help.cbp.gov/cgi-bin/customs.cfg/php/enduser/std_alp.php or http://www.aphis.usda.gov/import_export/plants/plant_imports/wood_packaging_materials.shtml for specific information on the recent stages of implementation. This site has:

   - USDA overview of standards;
   - Examples of the regulatory stamps; and
   - A Questions and Answers section for clarification.

b. Contact your local FedEx office for additional information and assistance. You can also find information at: http://fedex.com/us/promo/woodpackaging.html

4.6.4. Rules

All international teams, or U.S. teams shipping into and out of the U.S., must do the following to comply:

- Use only plywood or other exempted wood materials when constructing their shipping crates and robots;
- If using raw wood materials such as 4”x4”, 2”x4”s, 1”x boards, etc., obtain the materials from a lumber dealer who sells compliant wood products;
- Be sure the wood is marked with the approved international mark;
- Make sure you use properly treated and labeled wood for the 4” x 4”s under your crate used for facilitating forklift use;
- If you must use a pallet to ship your crate, make sure it is either non-wood or a compliant wood pallet, available from commercial pallet distributors; and
- Canadian teams should obtain an appropriate importer’s statement as indicated.

4.7. SHIPPING AND DRAYAGE DEFINITIONS

Bill of Lading	A receipt given by the carrier to the shipper acknowledging receipt of the goods being shipped and specifying the terms of delivery.
At Drayage Deadline	Latest date and time you can have your robot delivered to drayage facility. Find your initial event deadline in the "Shipping / Drayage" document found here: www.usfirst.org/frc_regional_events This deadline helps ensure that robots arrive at drayage in time for competition. After initial event, robots are due at the drayage facility on Monday before the event unless you make prior arrangements with the drayage company
Drayage	In our case, drayage refers to the system of accepting the delivered crate(s) into the drayage terminal, crate storage, crate delivery to the event site, and delivery back to the drayage terminal for outbound shipping.
Drayage Companies	Temporary warehousing companies. They take in, store, deliver, and document movement of event materials. In our case, the Drayage Company receives and documents team crate weight and arrival time, then stores them until delivery to the event site Pit Stations on the day prior to the event.
Shepard Bill of Lading (Material Handling Authorization & Transportation form)	Shepard Exposition Services requires you to fill one out in order to keep track of your crate(s), whether you ship with FedEx or the Shepard Logistics designated carrier. You will receive a copy to help you track your crate.
Pro Number	A number on the Bill of Lading used to monitor/track the shipment movement
Ship Deadline	The robot crate must leave the team's possession by delivering it or shipping it to the drayage facility.
Shipping	In this case, the term "shipping" refers to the transportation of your crate(s): • To the Drayage Company warehouse/terminal. • From the Drayage warehouse to the next event's Drayage warehouse. • Home after your last event.
Tracking Number	A number on the FedEx Express Air Waybill to monitor shipment movement.

4.8. VISUAL DEPICTION OF SHIPPING / DRAYAGE PROCESS

Please take a look at the figure below. It provides a visual of the flow of a team's crate shipment.

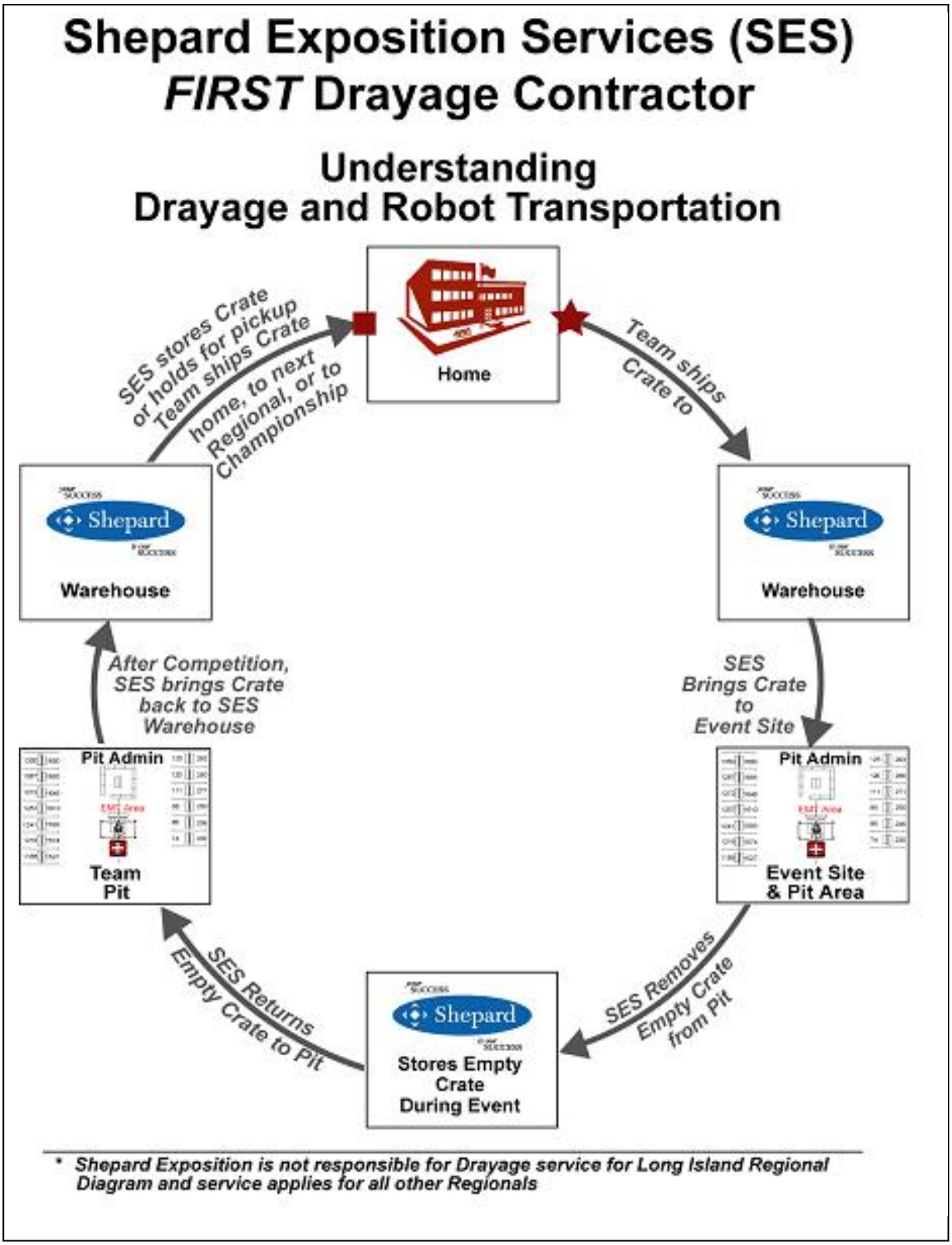

4.9. SHIPPING YOUR ROBOT

Event sites do not accept or store team robots, crates, or toolboxes. All teams must ship to the designated drayage warehouse facility, which stores the robots/crate(s) and then transports them to the event site and back to the warehouse for outbound shipment.

If you ship two crates, both crates must adhere to specifications and deadlines. Teams are responsible for paying for ALL charges at the time of shipment.

4.9.1. Robots MUST Ship Through the Drayage System

In order to keep track of robots and maintain a fair and safe robot shipping process and honor our venue agreements, union rules, and on-site safety, teams must ship robots from event to event. (See exception process and stipulation below)

Teams must use the Shepard Exposition Services carrier (use this link for planning your shipping: www.shepardes.com/first)***OR*** the FedEx donation (refer to Section 4.10) to ship their robot and crate(s) home. Teams are not permitted to transport them home themselves without prior approval of the Director of FRC (see below).

4.9.1.1. Exception Application Process

Exceptions to this rule will be made on a case-by-case basis.

1. Requests will be considered for a team's last event of the season only.
2. Teams requesting an exception must contact Team Support via frcteams@usfirst.org.
3. **Complete the exception application process by February 13, 2009** to allow for processing. Make the request clear and provide the:
    - Subject line: "Robot Removal, "Name of Event - Team XXXX (your team #)"
    - Reason for the rule variation
    - Event from which the robot would be taken
    - Description of the vehicle you will use to transport your robot and crate

Upon reception of this information, *FIRST* will, in good faith, consider your request. Be advised that each venue, its rules, and safety situations are unique. Some events are not laid out for safe robot removal and you will be refused for that reason. The Director of Robotics will review each case and will provide a written response. This decision will be final.

If permission is granted, you will have to present the written allowance to the **Event Manager on the first day of the event** so a plan can be in place. *FIRST* will notify the Event Manager of the exception so he/she will already be aware of the situation. The Pit Administration Supervisor can locate him/her for you.

4.9.1.2. Exception Stipulations

If your team receives written permission to remove your robot from your team's last event:

- The drayage company will neither help nor provide equipment for the removal, and teams will not be permitted to use the loading dock.
- You may have to load out at an earlier or later time than may be convenient.
- You will also be responsible for dismantling and removing your robot crate. Do not expect to receive assistance in those processes.
- A $150 clean-up fee will be assessed for any crates left behind.

4.9.2. Shipping to Your Initial Event

All team robots/crates must be out of the team's possession by Tuesday, February 17, 2009.

<u>For your initial event only</u>, you may choose any carrier to take your crate to the drayage warehouse **<u>OR</u>** you may drive your crate to the drayage warehouse. (For subsequent events,

use only the Shepard Exposition Services carrier OR if you have not yet used it, the FedEx donation (refer to Section 4.10)). If you choose to drive your own crate to the drayage location, you must contact Shepard, prior to the delivery, to obtain any delivery stipulation to ensure proper delivery to the specific drayage warehouse.

- Print the related shipping labels for your crate(s). Follow the instructions found on the "Shipping and Drayage" document, www.usfirst.org/frc_regional_events
- Whether you are using Shepard, the FedEx donation or an alternate carrier, make the appropriate shipping arrangements. Find detailed shipping information here: www.usfirst.org/frc_robot_shipping
- You will need the total weight and dimensions of your crate and its contents for an accurate shipping cost estimate. Obtain the best shipping rate to the drayage warehouse if you are not using the complimentary FedEx Freight ship option.
- Your truck must have a 48" bed height if you drive your crate(s) to the warehouse or you will be turned away at the warehouse! Drayage personnel will not unload personal vehicles.
- If you don't have a loading dock, notify your shipper that your crate pickup area does not have a loading dock so the shipper will send a truck with a lift gate.
- Obtain a dated receipt from your carrier. Retain all shipping documents and pro numbers so you can track your shipment and provide the required information for the mandatory shipment verification to *FIRST*.

4.10. VERIFYING INITIAL CRATE(S) SHIPMENT

FIRST requires every team to document the shipment of its crate(s) for its initial event. All crates must ship from event to event thereafter. Teams will disqualify themselves from aspects of the competition for failure to adhere to the rules and deadlines. It is your responsibility to track your robot.

Please follow the instructions below for your chosen shipment method.

If You Ship via the FedEx donation

FIRST recorded Bill of Lading and Air Waybill numbers and will verify that your shipment left on time. No action necessary.

If You Drive Your Robot to the Drayage Facility

a. Ask the drayage warehouse personnel to put the time and date of drop off on an official receipt.

b. Write your team number on the receipt.

c. Make a copy and retain for your records.

d. Address the envelope as shown below, using all capital letters.

e. Send the receipt to *FIRST* so it arrives by the following Monday.

If You Use an Alternate Shipper

Obtain a receipt from the shipper and ensure it clearly shows the date and time the crate(s) left your team's hands.

a. Write your team number on the dated bill of lading/receipt.

b. Make a copy for tracking purposes and retain for your records.

c. Provide shipping verification to *FIRST* so verification arrives the following Monday.

4.10.1. Verification Mailing Address

YOUR TEAM # and EVENT NAME AND EVENT DATE
TEAM SUPPORT
FIRST ROBOTICS
200 BEDFORD STREET
MANCHESTER, NH 03101

4.10.2. Crate Shipment Deadlines

All team robots/crates **must leave the team's hands by February 17, 2009.** This date applies whether you ship your crate(s) or drive it/them to the drayage facility. The crate(s) must arrive at your team's initial event's drayage warehouse by the Monday before the event.

NOTE: Teams must work within the business hours of the shipper and drayage facilities.
Hours: Monday – Friday, 8 a.m. to 4 p.m.

4.10.2.1. Crate Delivery Deadlines

Each event has an "at drayage" deadline. Refer to the "Definitions" section. Make sure your shipper is aware of the deadline so your crate will meet it. Find the crate arrival deadline for each event by referring to the "Shipping & Drayage" section found here: www.usfirst.org/frc_regional_events. Crates must arrive at the drayage site by the Monday before the team's next event, unless you make prior arrangements with the drayage company.

4.10.3. Event to Event Shipping - Two Choices

Remember to print/bring the shipping address information to each event in which you compete. Find them here: www.usfirst.org/frc_regional_events Crates will return to the drayage terminal post event and ship out on the Monday following the event.

Crates **must** ship directly from event to event, either through:

A. Shepard Logistics carrier. Go to the web link and follow directions for your online quote. www.shepardes.com/first

OR

B. The FedEx donation. Teams **CANNOT** use the FedEx donation for back-to-back events. Bring the supplied Bill of Lading and your next event's drayage address with you to the event.

4.10.4. Consecutive Weekends

Teams CANNOT use the FedEx donation for back-to-back events.

The shipping cost for back-to-back events is extremely costly. Compare shipping a small package to a location at a "ground" rate, and the cost of sending it overnight. Use this same scenario to compare freight shipping rates for a 3 or 4-day freight shipment to an overnight or airfreight shipment. *The difference can be staggering!*

FIRST discourages teams from competing in events on consecutive weekends if they are more than 1,000 miles apart. To have your robot ship and arrive at the next event on time, make arrangements with Shepard Exposition Services Logistics (www.shepardes.com/first) early to help ensure timely arrival. **This is the only option.**

Contact your event's Drayage Company(s) well before both competitions to see if it can/will ensure a timely shipment and extend the Monday crate arrival deadline for your team.

4.11. THE FEDEX DONATION

FedEx has again graciously agreed to partner with *FIRST* and donate specific robot crate shipping. *FIRST* expects all teams to follow the instructions carefully and become familiar with any changes made to the donation in order to accommodate the increasing number of teams in the FRC program.

FOR DETAILED INSTRUCTIONS ON HOW TO USE THE FEDEX DONATION REFER TO:

Robot Shipping page, www.usfirst.org/frc_robot_shipping

- Includes detailed instructions on how to properly fill out shipping documentation.

Event specific "Shipping & Drayage" document found on the Regional Events page, www.usfirst.org/frc_regional_events

- Includes information on delivery deadlines, ship to addresses, contacting Shepard Exposition and signage for the robot crate,
- Bring the appropriate "ship to" addresses with you to your events.

4.11.1. NEW FOR 2009! Shipping Within the 48 Contiguous U.S. States – FedEx Freight

FedEx Freight has donated two (2) complimentary shipments to each team. Teams can use these two (2) shipments however they would like to, with the exception of back-to-back weekend events. Teams will receive their Bills of Lading with the Kit of Parts.

Teams **CANNOT** use the FedEx donation for back-to-back events (aka consecutive weekend).

If your team is registered to compete at the Championship, the FedEx donation provides a third shipment home from the Championship.

***NEW FOR 2009*!** Teams qualifying for the Championship at a Regional will **NOT** be given a Bill of Lading at the qualifying event. Teams are responsible for managing how they use their two (2) donated shipments. Event Managers **WILL NOT** have extra copies as in previous years.

Example: If a team uses one (1) Bill of Lading to ship to their initial Regional and their second Bill of Lading to ship to their next Regional, the team is responsible for the shipment home (via Shepard) OR to the Championship. If a team has qualified to go to the Championship at a Regional and they have already used their two (2) donated shipments, the team **MUST** ship to the Championship through Shepard.

Post Event:

- You **cannot** take your robot home from any event, **including** the Championship. You must ship your crate(s) unless you have been granted an exception, refer to Section 4.9.1.1
- Because of the FedEx donated shipment volume, it could take a month or so until you receive your crate after the Championship, so if you have an off-season event scheduled, you may want pay for the Shepard Logistics carrier to ship your crate home.
- Shipments within the contiguous forty-eight states will ship "ground", and shipments may take up to five (5) or six (6) days for completion, and add a day or two for inclement weather. Refer to the map for a time estimate. www.fedexfreight.fedex.com/servicemaps.jsp

Shipment Recap:

- Crates will ship via FedEx Freight, **NOT** Express Freight.

- Your crate will ship "ground," not air.
- Shipments will take up to ***5 or 6 business*** days. If applicable, add a day or two extra for weather. (Do not count the day you ship).
- Shipments require a Bill of Lading (BOL), not an Air Waybill.
- Teams will receive two (2) Bills of Lading in a FedEx envelope as a part of their Kit of Parts. (Team registered for the Championship will receive a third bill of lading at the Championship to ship home.)
    - Bills of Lading are not replaceable.
    - Pro Label stickers are attached to the Bill of Lading. Refer to the "Robot Transportation" section of the web site for detailed labeling and shipping instructions - www.usfirst.org/frc_robot_shipping
    - Use the Pro number to track each shipment.

SUMMARY

Competing in: Regional Event(s) Only	Competing in: Regional Event(s) & The Championship
TWO (2) SHIPMENTS to be used however the team wants Teams **CANNOT** use the FedEx donation for back-to-back events. Team must use SES for any additional tool crates.	**TWO (2) SHIPMENTS** to be used however the team wants **AND** **ONE (1) SHIPMENT** back home from the Championship. Registered teams will receive a Bill of Lading at Championship for shipment home. ***REMEMBER:*** Teams qualifying for the Championship at a Regional will ***NOT*** be given a Bill of Lading at the qualifying event. Teams are responsible for managing how they use their two (2) donated shipments. Teams **CANNOT** use the FedEx donation for back-to-back events. Team must use SES for any additional tool crates.

4.11.2. Shipping Into and Out of the 48 Contiguous U.S. States – FedEx Express

FedEx Express has donated up to two (2) complimentary shipments to teams shipping into and out of the 48 contiguous U.S. states. This includes Alaska, Hawaii, and Puerto Rico. *FIRST* will distribute these Express airway bills to give teams the best value possible. Teams will receive their airway bills with the Kit of Parts.

Teams **CANNOT** use the FedEx donation for back-to-back events (aka consecutive weekend).

If your team is registered to compete at the Championship, the FedEx donation provides a third home from the Championship.

NEW FOR 2009! Teams qualifying for the Championship at a Regional will **NOT** be given a Bill of Lading at the qualifying event. Teams are responsible for managing how they use their two (2) donated shipments. Event Managers **WILL NOT** have extra copies as in previous years.

Example: If a team uses one (1) air waybill to ship to their initial Regional and their second airway bill to ship to their next Regional, the team is responsible for the shipment home (via Shepard) OR to the Championship. If a team has qualified to go to the Championship at a Regional and they have already used their two (2) donated shipments, the team **MUST** ship to the Championship through Shepard.

Post Event:

- You **cannot** take your robot home from any event, **including** the Championship. You must ship your crate(s) unless you have been granted an exception, refer to Section 4.9.1.1
- Because of the FedEx donated shipment volume, it could take a month or so until you receive your crate after the Championship, so if you have an off-season event scheduled, you may want pay for the Shepard Logistics carrier to ship your crate home.

Shipment Recap:

- Crates will ship via Express.
- Shipments require an Air Waybill.
- Teams will receive two (2) Airway bills in a FedEx envelope as a part of their Kit of Parts. (Team registered for the Championship will receive a third bill of lading at the Championship to ship home.)
    - Airway Bills are not replaceable.
    - FedEx Express account numbers are pre-printed on the airway bills. Refer to the "Robot Transportation" section of the web site for detailed labeling and shipping instructions - www.usfirst.org/frc_robot_shipping
    - Use the tracking number to track each shipment.

4.11.3. Shipments the FedEx Donation Does Not Cover

The FedEx donation does not cover shipments intra-Canada or intra-Israel. This means teams shipping within these areas must pay for their own shipping arrangements. Teams are responsible for all shipping costs.

Teams MUST use Shepard to ship from one event to another inside Canada.

4.11.4. Weigh the Donation Value

Which event will give your team the most value for this donation? Consider the following if:

- **You have back-to-back events:** You **cannot** use the FedEx donation because it is a "ground" shipment. Crates are due at the drayage facility on Monday so there will not be enough time to make it from one event to the next drayage terminal/warehouse.
- **You are registered for more than one Regional:** See if your sponsor will ship your crate to the initial event since you must use either FedEx or the Shepard Services Logistics carrier after your initial event. Use the FedEx donated shipment for another Regional.
- **Your initial event is close to home:** If you have the proper vehicle/bed height (48"), you could drive your crate to the drayage facility and save the donation for a different Regional. Refer to Section 4.9.2 for more details.

4.12. SHEPARD EXPOSITION SERVICES FREIGHT QUOTES

Business hours for Shepard warehouses. **Monday – Friday, 8 a.m. to 4 p.m.**

If you do not ship with the FedEx donation, you **must** ship from event to event with the Shepard Logistics carrier. To obtain a quote, please go to www.shepardes.com/first

OR

Contact Shepard Customer Service at (704) 394-9140

a. Identify yourself as a *FIRST* Robotics team

b. Provide your team number, event name, city, and state

To help with this process, **Paula Mullis** will be contacting all participating teams registered for more than one Regional event.

ADDITIONAL SHIPPING CHARGES:

- If your delivery area does not have a loading dock, you will need a truck equipped with a lift gate, and there is a **charge for this.**
- All shipments will also have a fuel surcharge at a commodity price.

4.13. DRAYAGE

Every team has to ship its competition crate(s) to the designated drayage warehouse for each event it attends. **You cannot, under any circumstances, drive or ship crates to competition sites.**

Shepard Exposition Services is the designated Drayage Company for all events **except the SBPLI Long Island Regional and New York City Regional.** FESTO Corporation handles materials for the SBPLI Long Island Regional event. Metro Expo handles materials for the New York City Regional.

All instructions apply for the drayage companies.

a. Label your crate properly. If it doesn't meet required specifications, the drayage terminal may refuse it. Refer to the "Shipping & Drayage" document for your event: www.usfirst.org/frc_regional_events

b. Well ahead of shipping time, find drayage information and overweight (overage) costs for all events in which your team will compete. Refer to the "Shipping & Drayage" document for your event: www.usfirst.org/frc_regional_events

c. Refer to all related sections below.

4.13.1. The Drayage Companies: Functions and Services

FIRST contracts with a drayage company for each event to provide the following services for:

a. A system to monitor on-time crate arrival
b. Robot storage prior to the events
c. Ensuring on-time crate delivery to team Pit stations at the competition sites
d. Storage for empty crates at the venue
e. A staging location for outbound shipments
f. Protecting staff and teams from crowded load-in and load-out situations
g. Compliance with venue contracts, which prohibit the acceptance of shipments on site

4.13.2. Drayage Company Regulations

- Teams **MUST** provide a completed "Payment Authorization Form" to Shepard Exposition Services prior to your team's initial event.
- Drayage personnel is not allowed to, and will ***not,*** load your crate onto your vehicle.
- **All shipments must be paid before you leave the Regional. Payment is accepted in the form of credit card on file, money order, or school check.**
- **Use only designated shippers:** Teams must:

a) Use the Shepard Logistics carrier **OR** the donated FedEx when shipping from **ALL** events.
b) Fill out required paperwork and return it to the drayage desk when shipping from an event.
c) Make on-site arrangements with the Shepard representative or arrange ahead of time for shipping through the Shepard Exposition Carrier. A credit card has to be on file if you plan to make shipping arrangements with a Shepard at the event.

- **Freight Bills, Weight Receipts:** Shipments received without freight bills or specified unit counts on receipts will be delivered to team Pit Stations without guarantee of piece count or condition. When receiving freight, the drayage terminal requires that drivers submit a *certified weight receipt* and reserves the right of refusal to unload shipments without it.
- **Shepard Bill of Lading:** All shipments must have a Shepard Bill of Lading regardless of whether team is shipping via Shepard or the FedEx donation. Refer to www.shepardes.com/first to see how a bill of lading is filled out.
- **Damage:** The drayage warehouses will not be responsible for damage to uncrated materials, improperly packed materials, or any concealed damages, loss, or theft of materials after crates have been picked up for loading out of the competition site.
- **Weigh In:** The drayage warehouse handlers will weigh team crates as they arrive at each facility. These weights will be certified, and any crates exceeding four hundred (400) pounds will be subject to drayage overage fees. Refer to the "Shipping & Drayage" document for your event: www.usfirst.org/frc_regional_events

If a team wants to dispute the weight of its crate, a scale will be on site at each event for reweigh within the specified time (see Section 4.13.3.2 below and your event's Shepard representative).

4.13.3. Freight Overage

All teams must pay for drayage overage in advance, prior to the competition. If a team refuses to pay overage charges, the drayage companies may refuse return of the team's crate until payment is reconciled at the service desk. Upon payment receipt, it will return the crate(s).

All teams are required to **complete a Payment Authorization Form** and send in before the events begin regardless if your crate is overweight or not. If you plan on sending a school check you are required have a credit card on file so that if a check is not received within 30 days the card will be charged.

- Download the form, which is part of your "Shipping / Drayage" information for your event(s). www.usfirst.org/frc_regional_events.
- Fill it out completely and fax it to (704) 398-0914.

4.13.3.1. Accepted Payment Forms for Shepard:

All overage payments are due at Shepard 15 days post event.

- MasterCard, Visa, or American Express are accepted credit cards for overage fees:
- School check - the check must arrive at Shepard *before* the team participates in the event.

4.13.3.2. Immediate On-site Weight Complaint Resolution

Because of safety requirements, crates are removed from the Pit as early as possible. Adhere to the following schedules for resolving weight complaints.

Regional Events: 7:45a.m. - 8:30a.m.

Championship: Wednesday, 6p.m. - 9p.m, Thursday, 7:45a.m. - 8:30a.m.

When team members arrive at the Pit Station to uncrate the robot:

a. Read the label Shepard placed on your crate.

b. If your crate shows a weight over 400 pounds, and if you have any question as to the accuracy of the weight or information on the label, **immediately** find an Shepard representative to ask for a re-weigh. See the Pit Administration Supervisor if you cannot find a representative.

c. *Do not open the crate until you have received a re-weigh.*

NOTE: If you open the crate, you relinquish any appeal rights.

d. Do not leave your Pit station until the re-weigh.

4.13.4. Weight and Rates Structure

Rounding Up: Drayage Companies weigh by the hundredweight and round the weight up to the next hundred. Make a real effort to keep weight down to well below the hundred marks to allow for scale calibration differences.

Example*:* If your crate weighs 401 pounds, your charge will be based on five hundred pounds, and you will have to pay for a hundred pound overage for that crate. Refer to the "Shipping & Drayage" document for material handling rates: www.usfirst.org/frc_regional_events

4.13.4.1. Drayage Costs - *FIRST*

FIRST will pay for the Material Handling (drayage) cost of *ONE* crate, *within criteria limits,* for each team per event.

Refer to *Crate Information, Crate Size, and Weight Specifications* section for specifics.

4.13.4.2. Drayage Costs - Teams

The following will cost teams money:

a. Crate exceeding measurement or weight specifications

b. Any additional crate. Teams pay *entire* drayage cost of an additional crate.

NOTE: Each team must pay for any additional material handling charges by the end of each competition.

4.13.5. Outbound Shipments from the Drayage Terminal

Shepard will bring crates back to its Shepard Advance Warehouse on Saturday after the competition. Crates will be available for outbound shipping from the warehouse on Monday, with the exception of shipping from the Championship.

NOTE: Crates from the Championship shipping via FedEx donated shipping, will ship at FedEx convenience.

a. Teams must ship their robots, and cannot take robots or crates with them from any event, including the Championship, without prior permission by the deadline. See Sections 4.9.1.1 and 4.9.1.2

b. Be sure to:

- Ensure your crate is still fit for travel.
- Remove the old address labels.
- Attach the consignee address label for the next event, if applicable, to all sides of the crate…at a readable level.
- Pre-pay for all applicable outbound shipping charges.
- Fill out the Shepard Bill of Lading. A representative will have forms available at each Shepard handled event.

- If you are shipping "home," and the delivery site has no loading dock, note your request for a delivery truck with a lift gate in the "Special Instructions" area on the Shepard Bill of Lading. For the Long Island Regional and New York City Regional, ask the appropriate shipping representative where to make that note.

c) Make arrangements for the outbound shipment.

Using the FedEx donation?

- Fill out your FedEx Bill of Lading or Air Waybill.
- If shipping outside the 48 contiguous U.S. attach an air waybill to your crate. Make note of the tracking number.
- If shipping within the 48 contiguous U.S. states, give the top copy of the bill of lading to the Shepard Representative. **DO NOT LEAVE THE FEDEX BILL OF LADING ON YOUR CRATE.**
- Write your FedEx Pro number or air waybill tracking number above the "SPECIAL INSTRUCTIONS" area on your Shepard form, and **turn the form in at the Shepard Exposition Services shipping desk**. You will receive a copy.
- If using the FedEx donation, Shepard will schedule the pick up with directly with FedEx. Please do not contact FedEx to schedule a pick up of your crate.

4.13.6. Shepard Exposition Services Bill of Lading

You will receive a bill of lading from the Shepard desk at each event. Whether you are shipping via the FedEx donation OR Shepard you must fill one at each regional. For an example of how to fill it out, go to www.shepardes.com/first.

4.14. TRACK YOUR CRATE

FedEx Freight – 48 Contiguous U.S. States

You should see movement on your shipment by Wednesday after the event.

Go to www.fedexfreight.fedex.com/track.jsp

- Choose "Track by Pro Number"
- Insert your Pro number

Contact FedEx if you don't see movement by Wednesday. (800) 463-3339

FedEx Express– Shipments into and out of the U.S.

Go to www.fedex.com/us/expressfreight/ and choose the "Track" tab and Insert your tracking number.

Contact (800) 332-0807 if you don't see movement.

Shepard Logistics Carrier

You should see movement on your shipment by Wednesday after the event. *For back-to-back shipments, begin tracking on Monday.*

To track your shipment:

Go to www.shepardes.com/first and choose "Track My Crate"

OR

Contact Paula Mullis at:

Phone: (704) 394-9140

Cell: (704) 201-2058

E-mail: pmullis@shepardes.com

For problems, contact Shepard Exposition Services Customer Service at (704) 394-9140. Provide your team number and event(s) involved

4.15. WE JUST QUALIFIED FOR THE CHAMPIONSHIP

4.15.1. What do we do? Is there a Decision Deadline?

If you are unsure whether your team can go to the Championship, you have *until the Tuesday following your qualifying event* to inform *FIRST* and Shepard whether you will attend and register for that event through *FIRST* headquarters. If this is your last event, you have until Tuesday to let the drayage company know whether you will be shipping home or to the Championship. Follow instructions below.

4.15.2. Undecided?

If you are not sure your team can attend the Championship, read below for the "hold" process.

1. Make sure you talk with the Shepard representative at the event (or the FESTO Corporation/Metro Expo representative if at the Long Island/New York City Regional). Explain your situation and make temporary arrangements per the directions below.
   - Put an 8 ½" by 11" sign on your crate, near your Pro number sticker/Air Waybill. It should say:

     Team will call.
     Hold until Tuesday.

   - Consider shipping your tools if you have room and can safely pack them in your crate.
2. Label your crate:
   - Fill in the FedEx paperwork with the address for the Championship drayage warehouse. You can look in the FRC Manual at the Pit Administration Station for the Championship consignee address.
   - Place the Pro number stickers and copies of the Consignee Address Labels on each facing side of the crate if shipping FedEx Freight. Obtain copies via the "Shipping & Drayage" document: www.usfirst.org/frc_regional_events
     - Refer to the "Robot Transportation" section of the web site for detailed labeling and shipping instructions - www.usfirst.org/frc_robot_shipping
   - Make sure you still have the battery labeled, if applicable, on the four sides of your crate and the inner battery box.
   - Provide Shepard with a completed Shepard Bill of Lading ***and/or*** a FedEx Bill of Lading/Airway Bill. Write your pro number/tracking number on the Shepard Bill of Lading if shipping FedEx. Save all copies.
3. **Inform the drayage terminal of your shipping intentions by the Tuesday.**
   - Follow up with Shepard on your shipping arrangements.
   - Always track your shipment.

4.15.3. We Changed our Minds

- If you find that you are not shipping to the address on your Bill Of Lading or Air Waybill, you **MUST** ship through the Shepard Exposition Services carrier and pay for that shipment. Call to make the arrangements, provide the new shipping address, and prepay the shipment.
- Always track your shipments to ensure a timely delivery.

Because of possible liability, the drayage company will not fill out FedEx paperwork for your team.