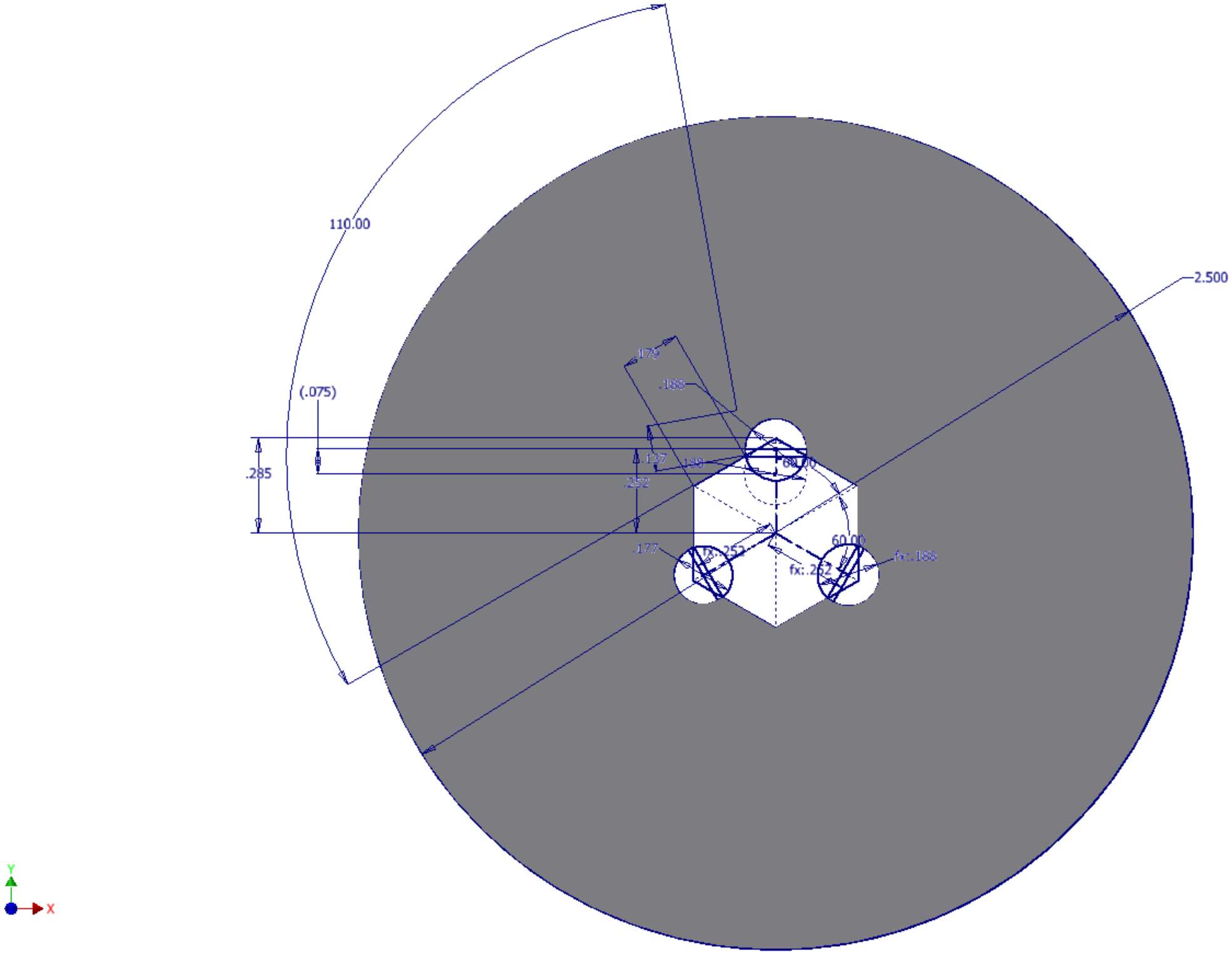
110.00
2.500
.179
.188
(.075)
.285
.127
.188
.252
60.00
.177
fx:.252
60.00
fx:.188
fx:.252
Y
X