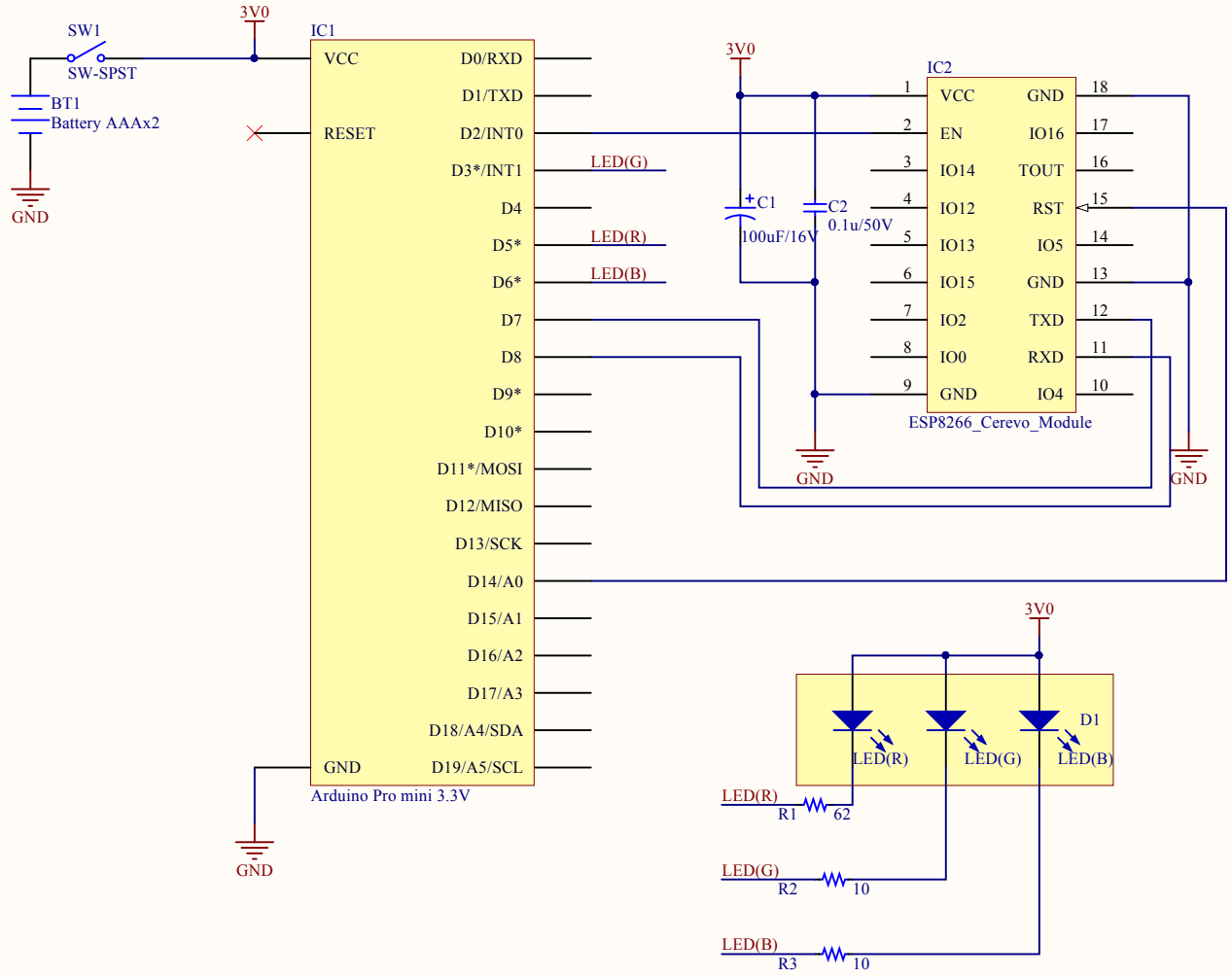

Title	ESP8266CerevoModule-Arduino Pro Mini 3.3V	
Size A4	Number	Revision 1.0
Date: 2015/08/10	Sheet of 1/1	
File: C:\Altium\..\Arduino_Promini3V3-W_LAN_ESP8266.SchDoc	Drawn By: M.Oshikiri	