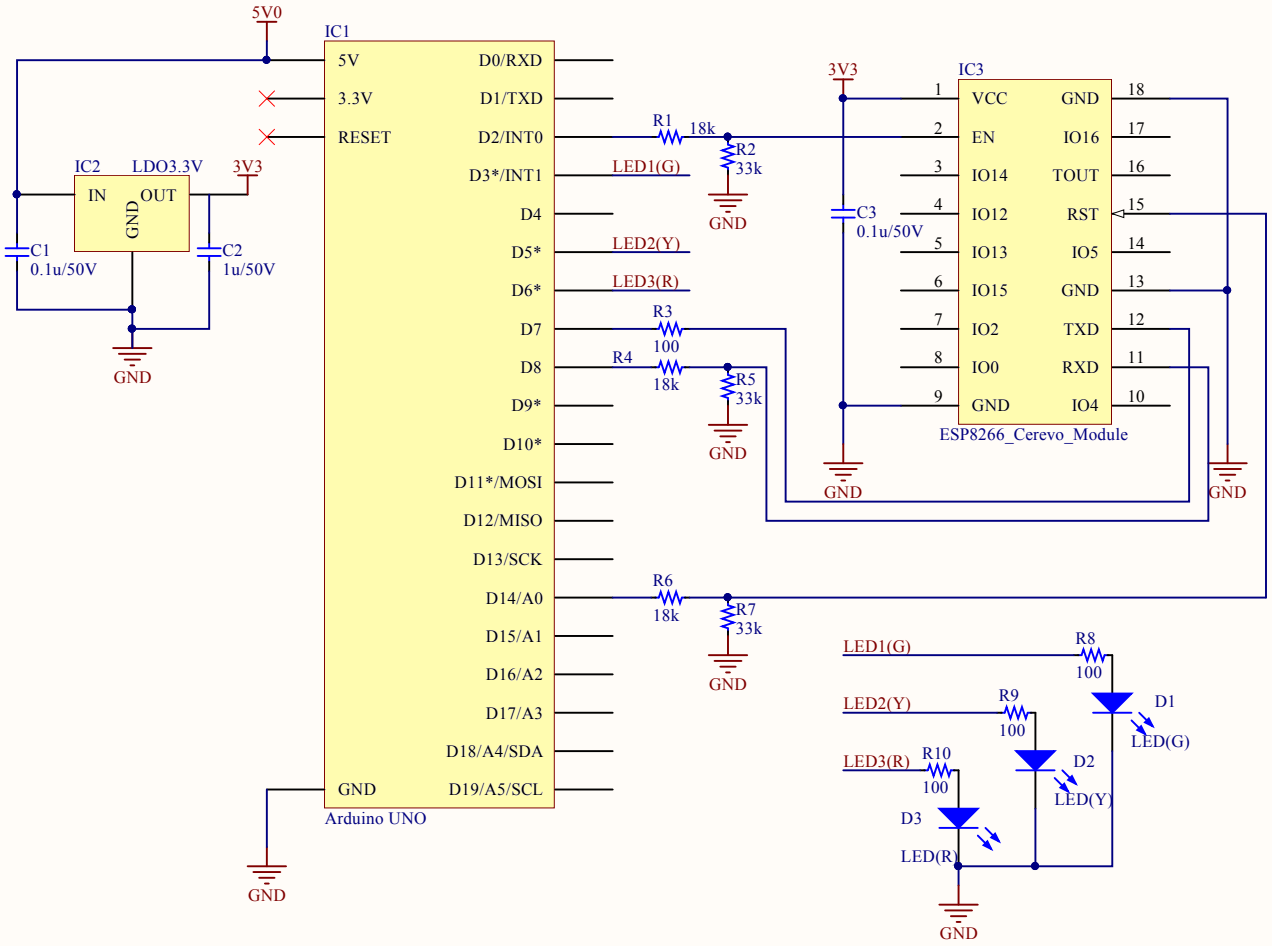

Title	ESP8266CerevoModule-Arduino UNO	
Size A4	Number	Revision 1.0
Date: 2015/08/09	Sheet of 1/1	
File: C:\Altium\..\Arduino_UNO-W_LAN_LED.SchDoc	Drawn By: M.Oshikiri	