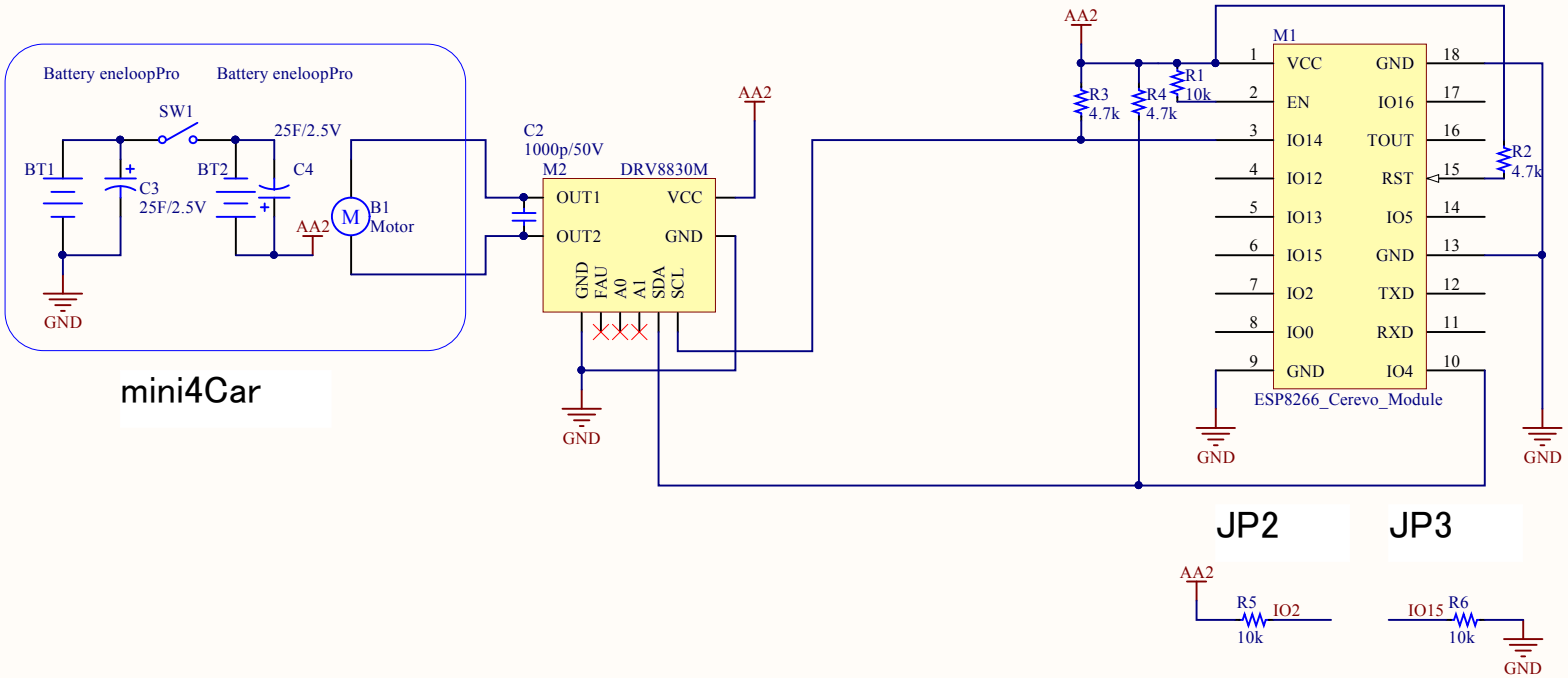

Title	ESP8266CerevoModule-DRV8820Module-mini4car	
Size A4	Number	Revision 1.1
Date: 2015/09/13	Sheet of 1/1	
File: C:\Altium\..\DRV8830M-W_LAN.SchDoc	Drawn By: M.Oshikiri	