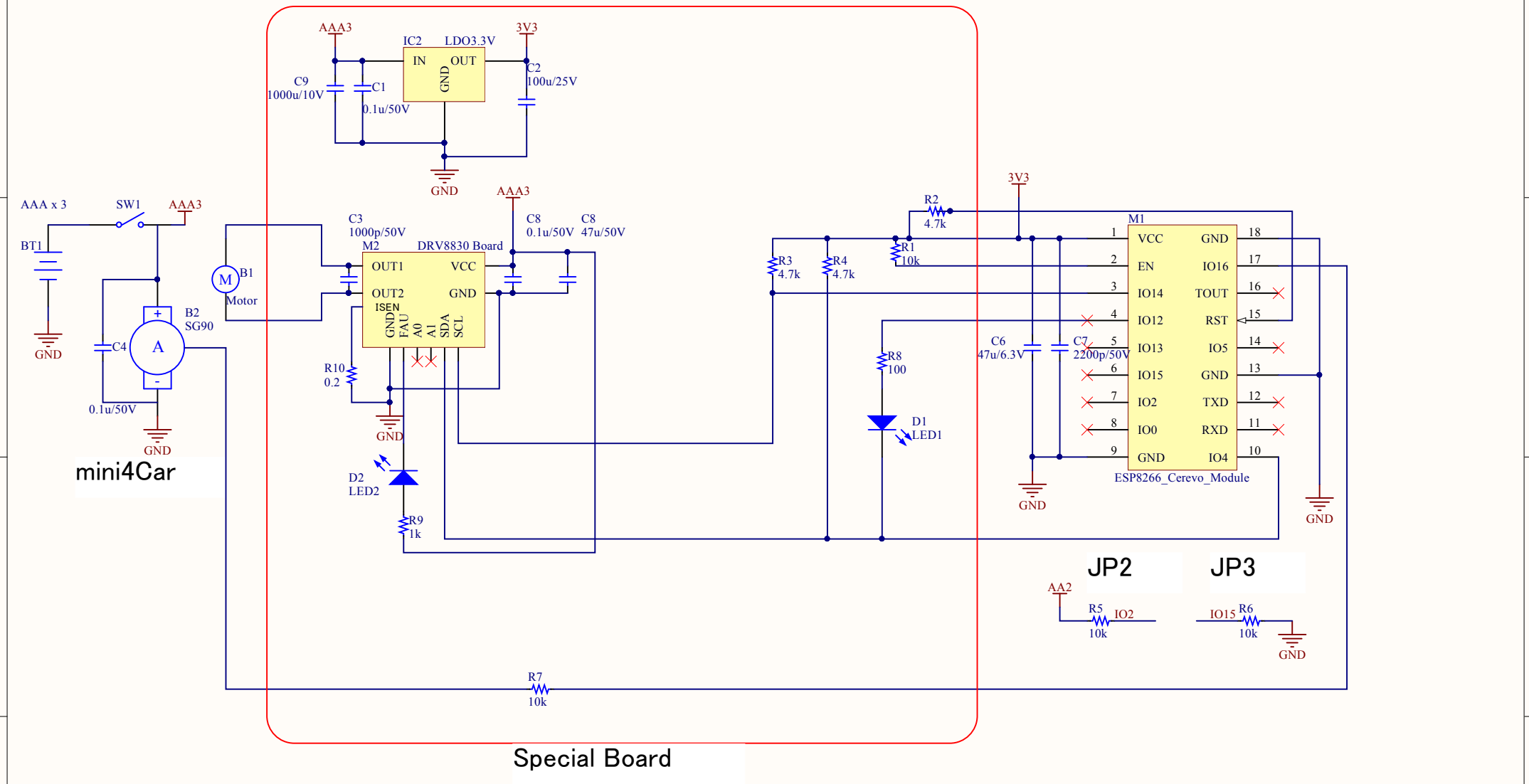

Title	ESP8266CerevoModule-DRV8820Module-Wilsmini4car	
Size A4	Number	Revision 0.3
Date: 2015/10/19	Sheet of 1/1	
File: \\..\DRV8830M-W_LAN_WS_V03.SchDoc	Drawn By: M.Oshikiri	