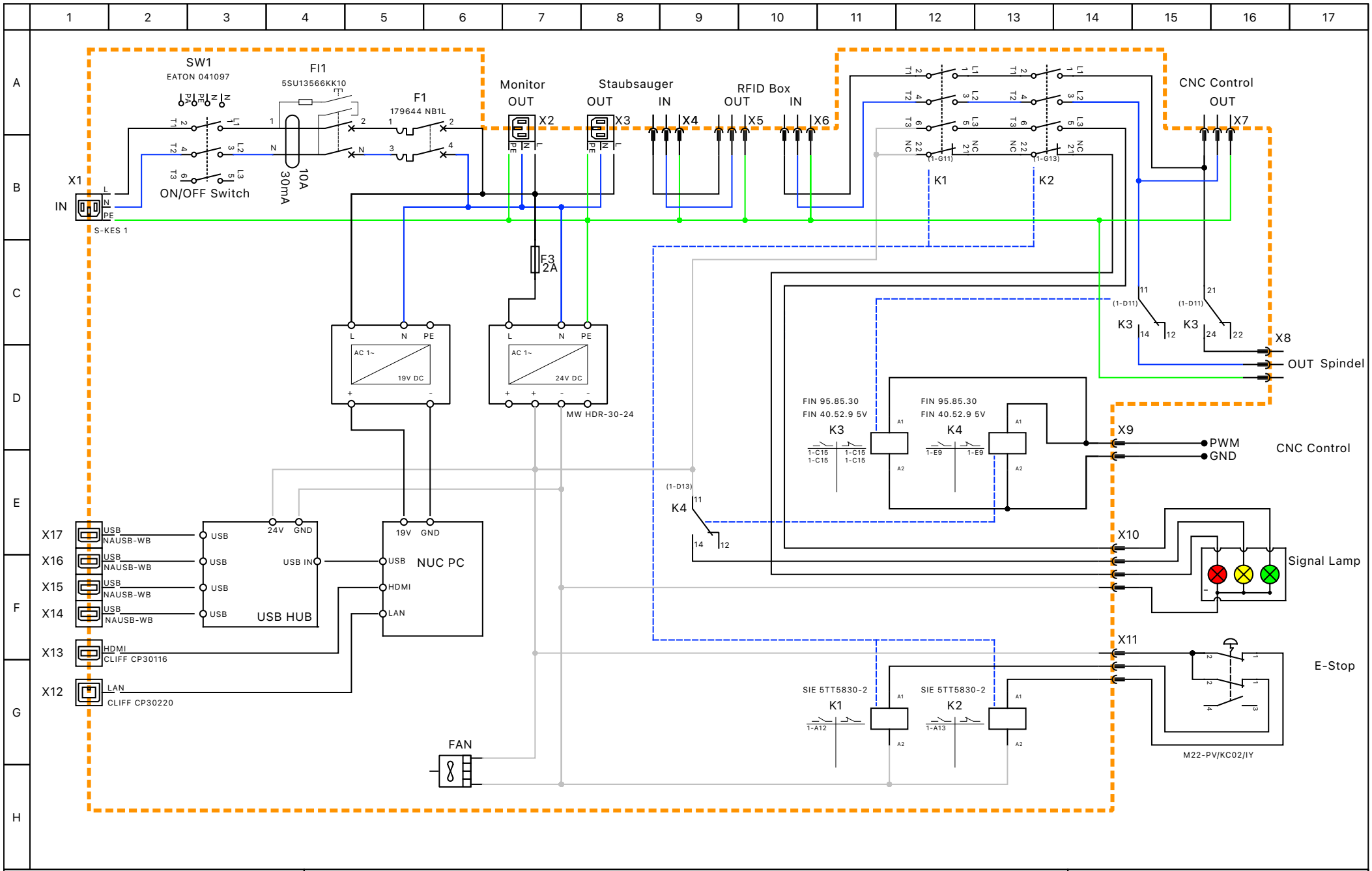


| | | |
|---|---|---|
| Author: Marius Tetard | Holz CNC | File: |
| Date: 18.02.25 | | Folio: 1/2 |

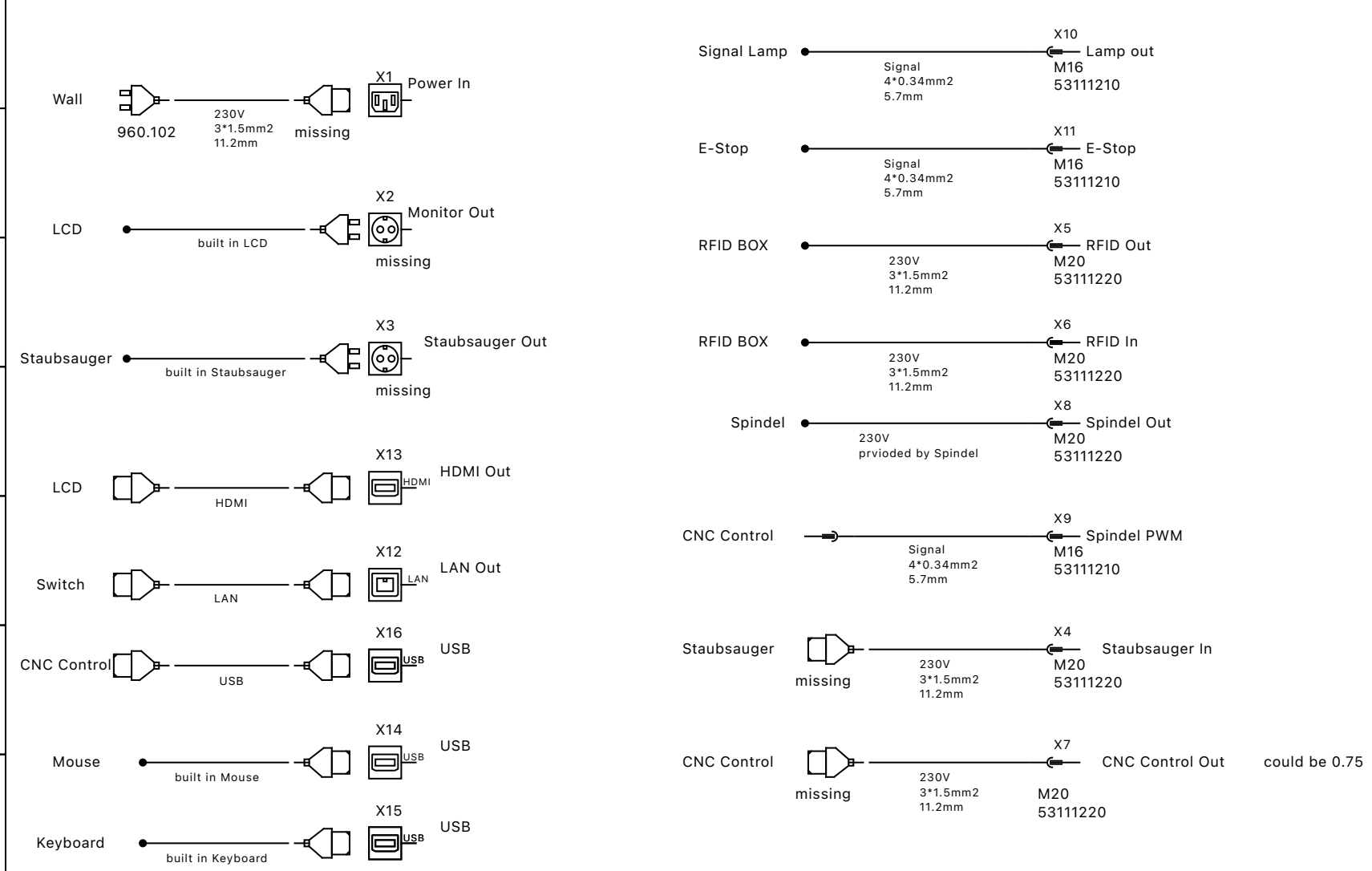


| | | |
|---|---|---|
| Author: Marius Tetard | Holz CNC | File: |
| Date: 18.02.25 | | Folio: 2/2 |