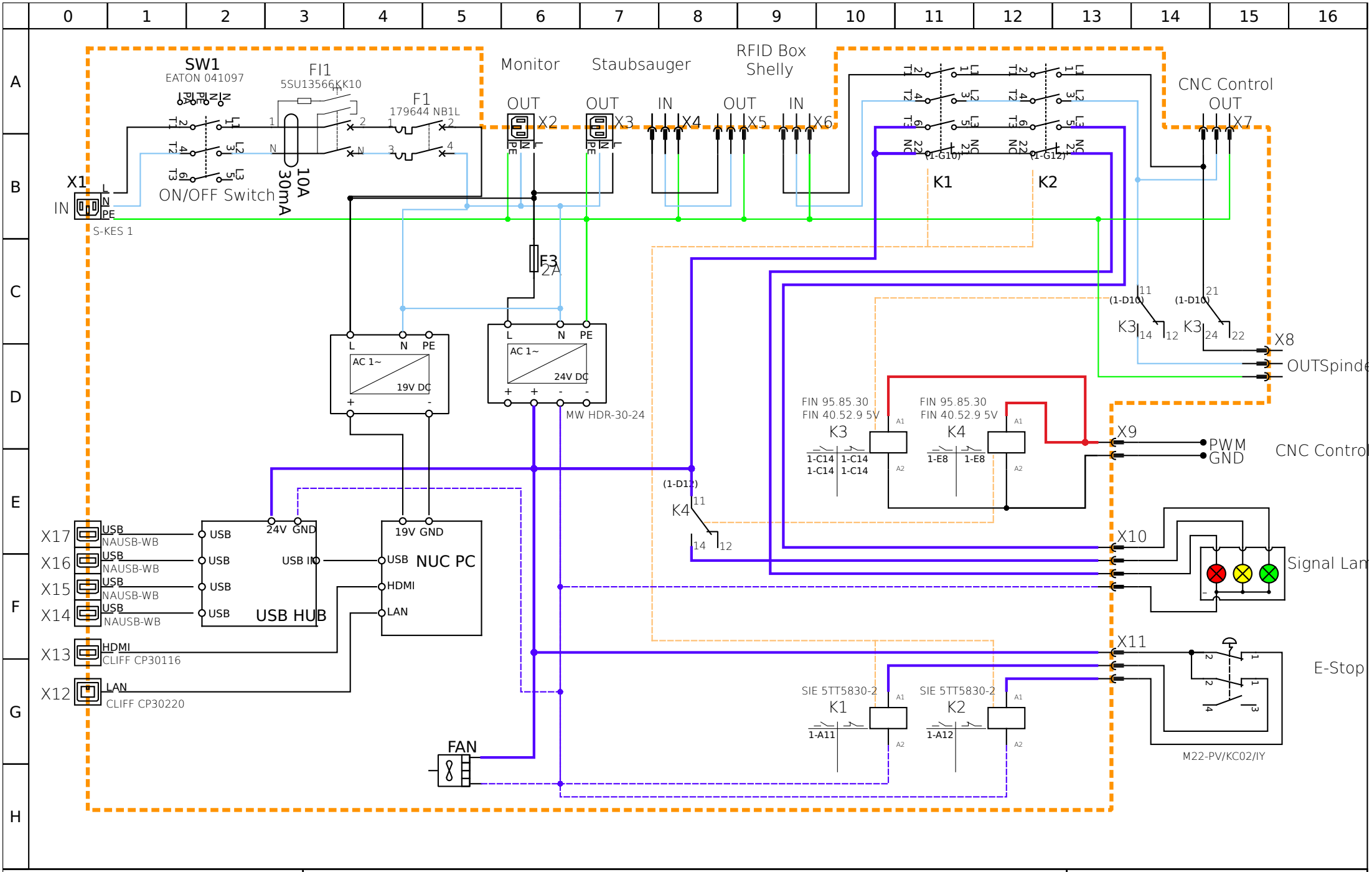

Author: Marius Tetard	Holz CNC	File:
Date: 18.02.25		Folio: 1/2

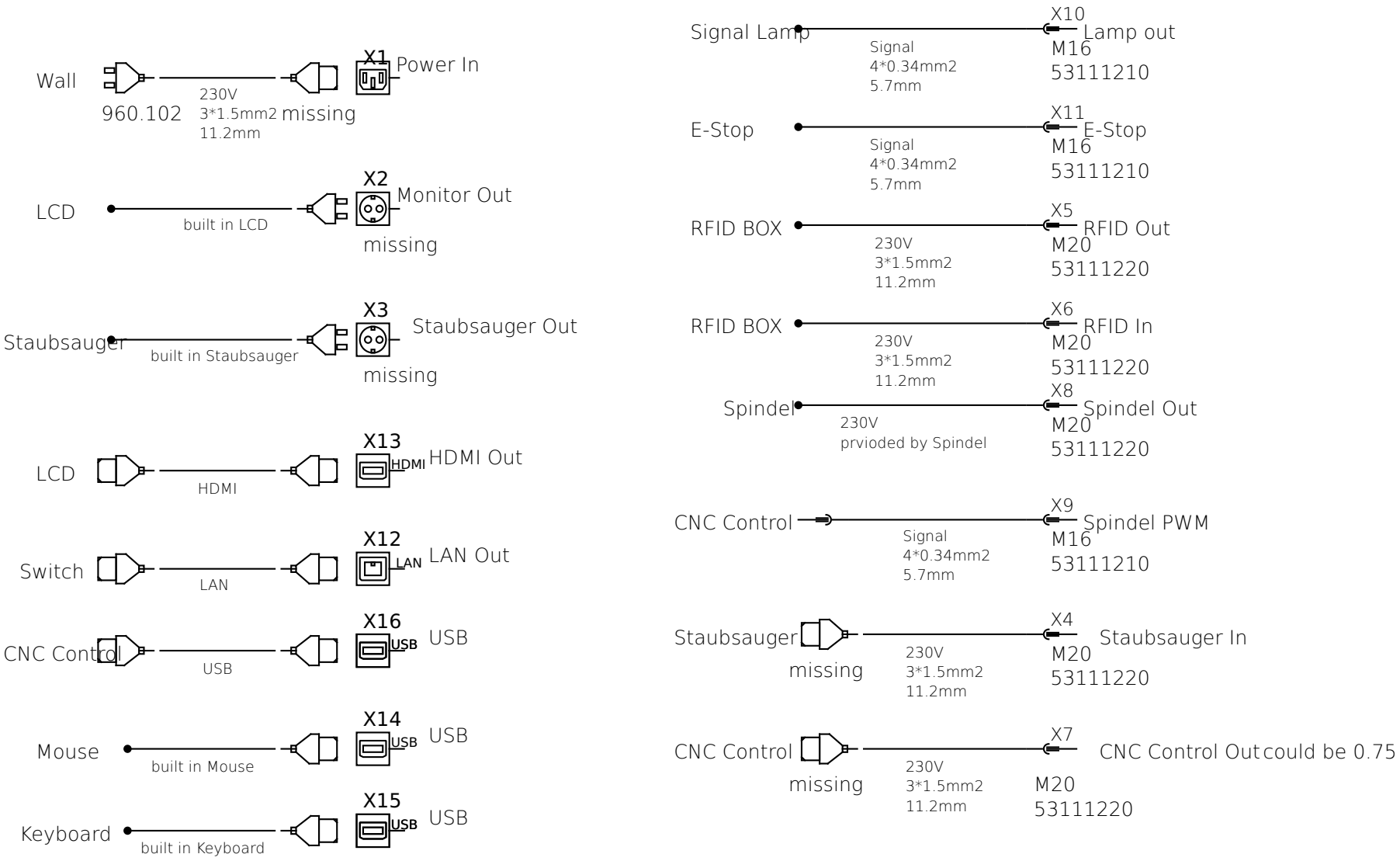

Author: Marius Tetard	Holz CNC	File:
Date: 18.02.25		Folio: 2/2