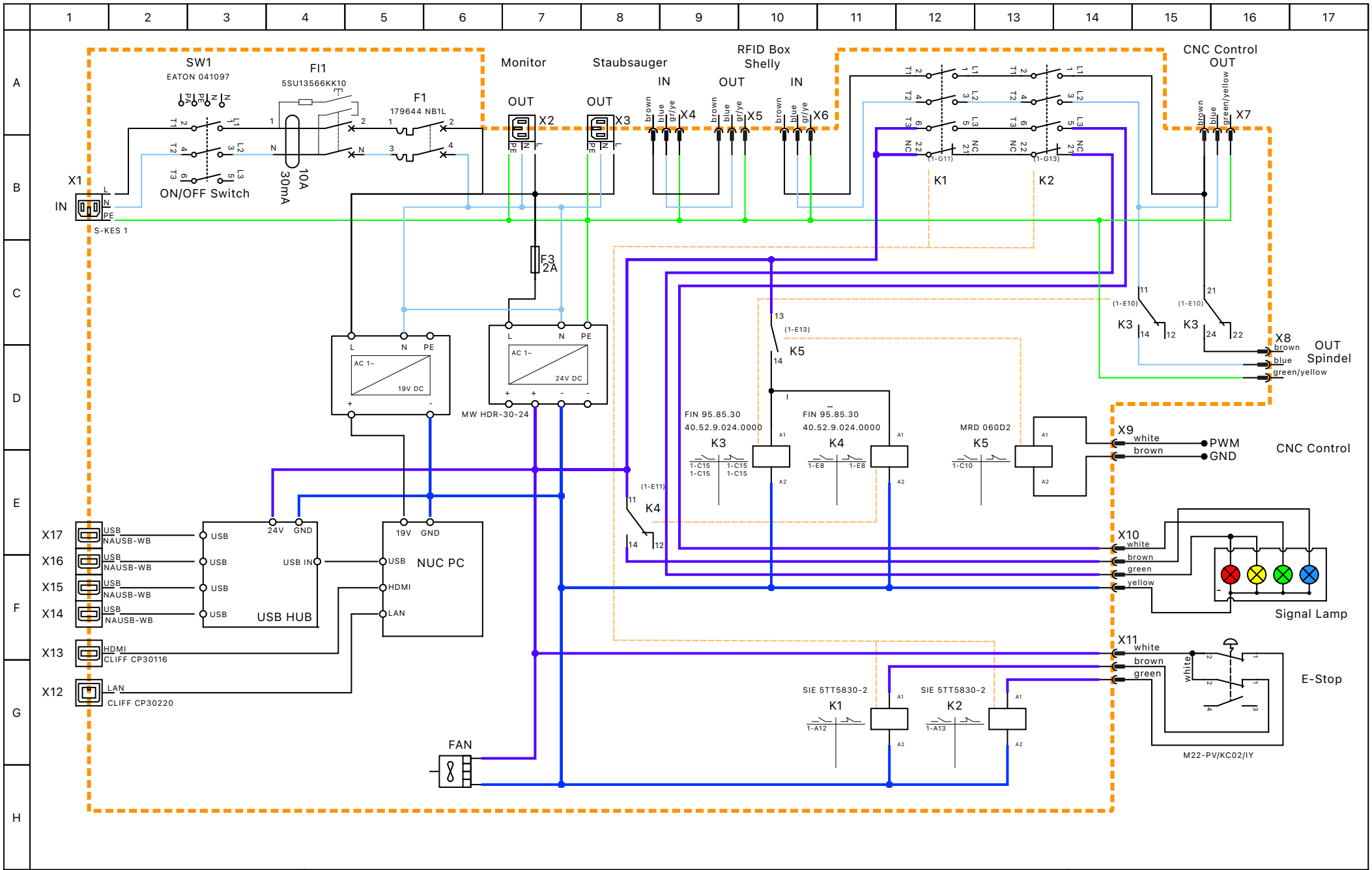

Author: Marius Tetard, Moritz Bö	Holz CNC	File:
Date: 22.02.25		Folio: 1/2

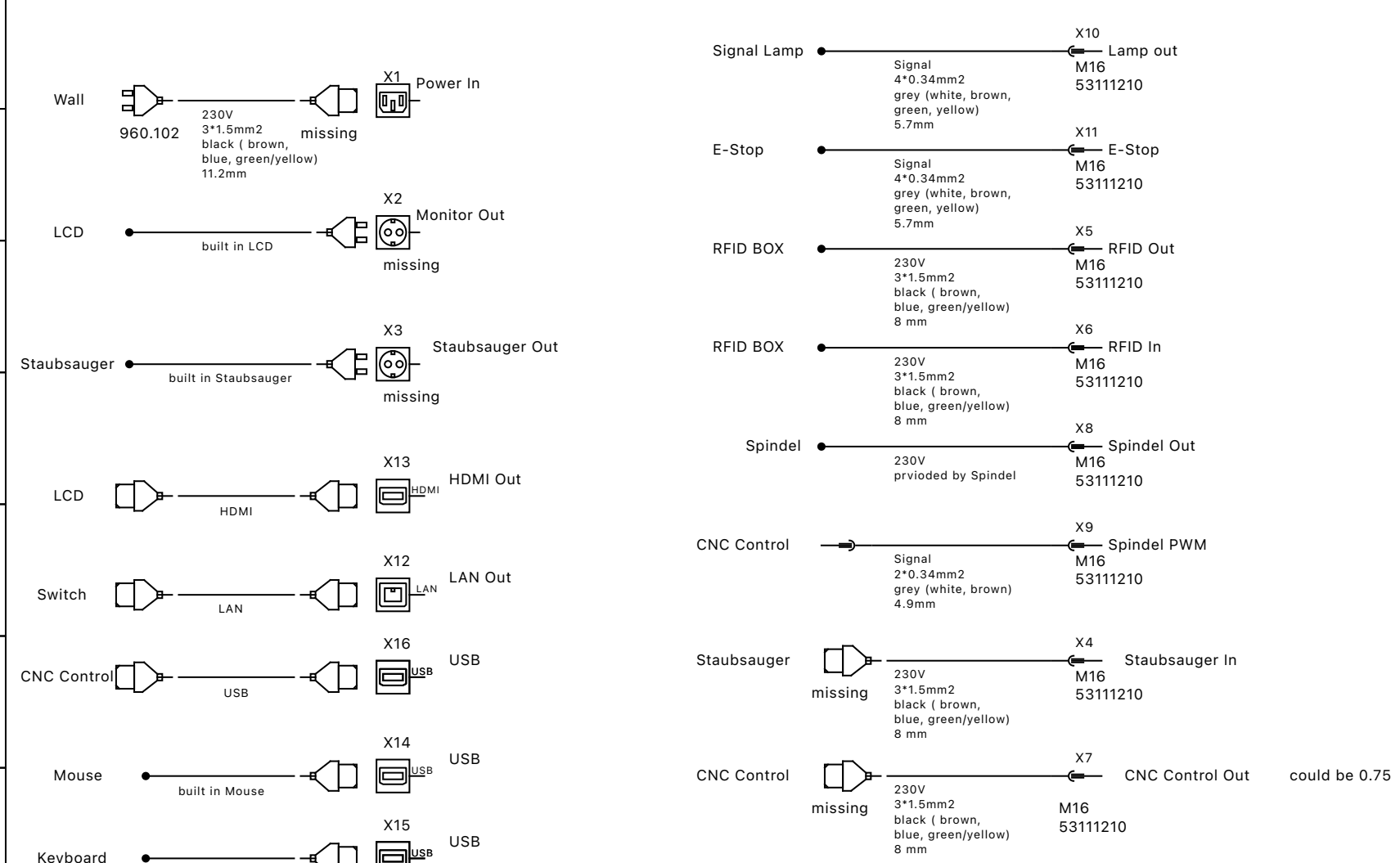

Author: Marius Tetard, Moritz Bö	Holz CNC	File:
Date: 22.02.25		Folio: 2/2