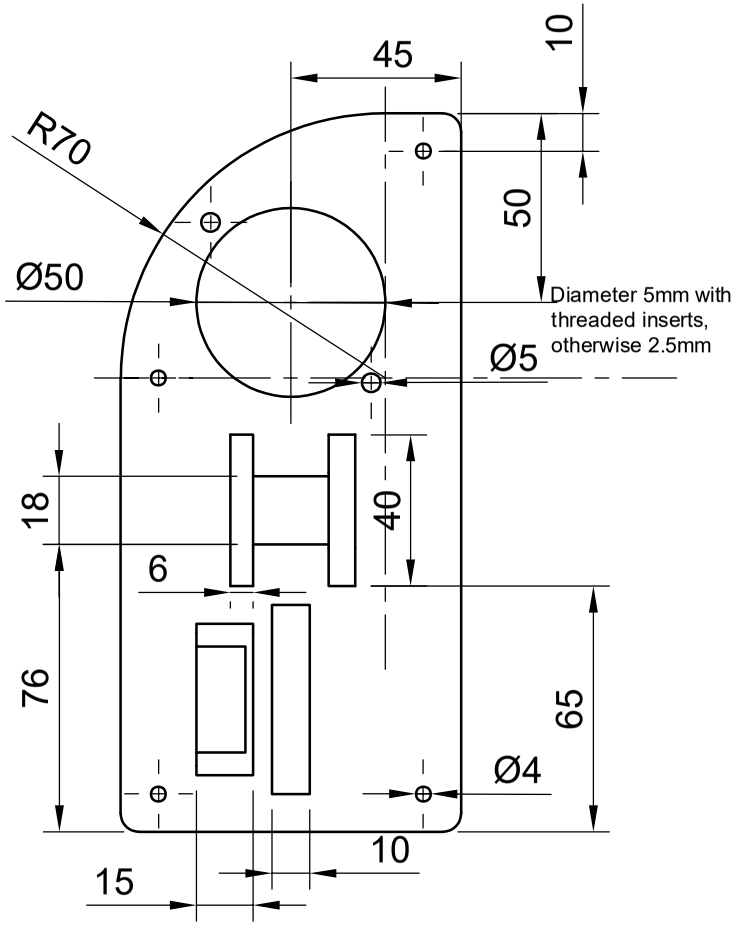


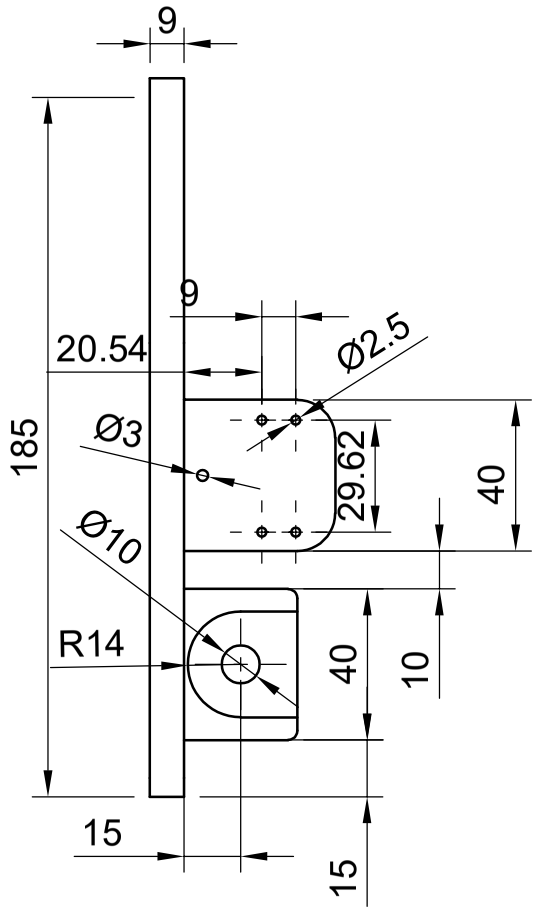


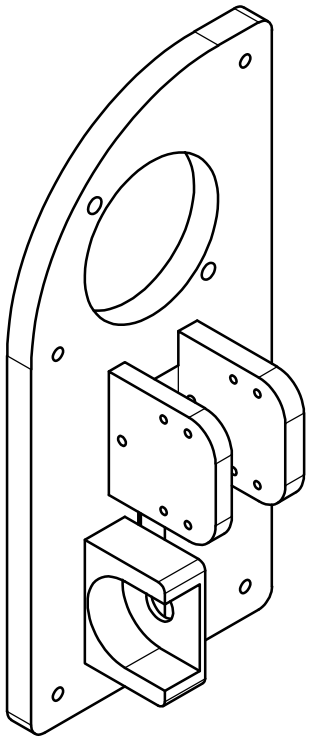

All measurements in mm

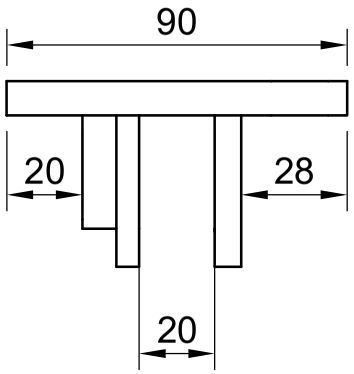


| Dept. | Technical reference | Created by | Approved by |
|---|---|---|---|
| Constr. | n/a | Volker Bollig 30.01.2022 | VMB 01 30 2022 |
| Panel 4 UpperSidePanelRight houses RG50 Gauge, Flap lever w. endstops and elevator trim poti and wheel | | Document type: Drawing | Document status: ready for publishing |
| | | Title: Dashboard Panel 4 UpperSidePanelRight | DWG No.: 6 |
| | | | Rev. 1 / Date of issue Jan 30 2022 / Sheet 1/3 |