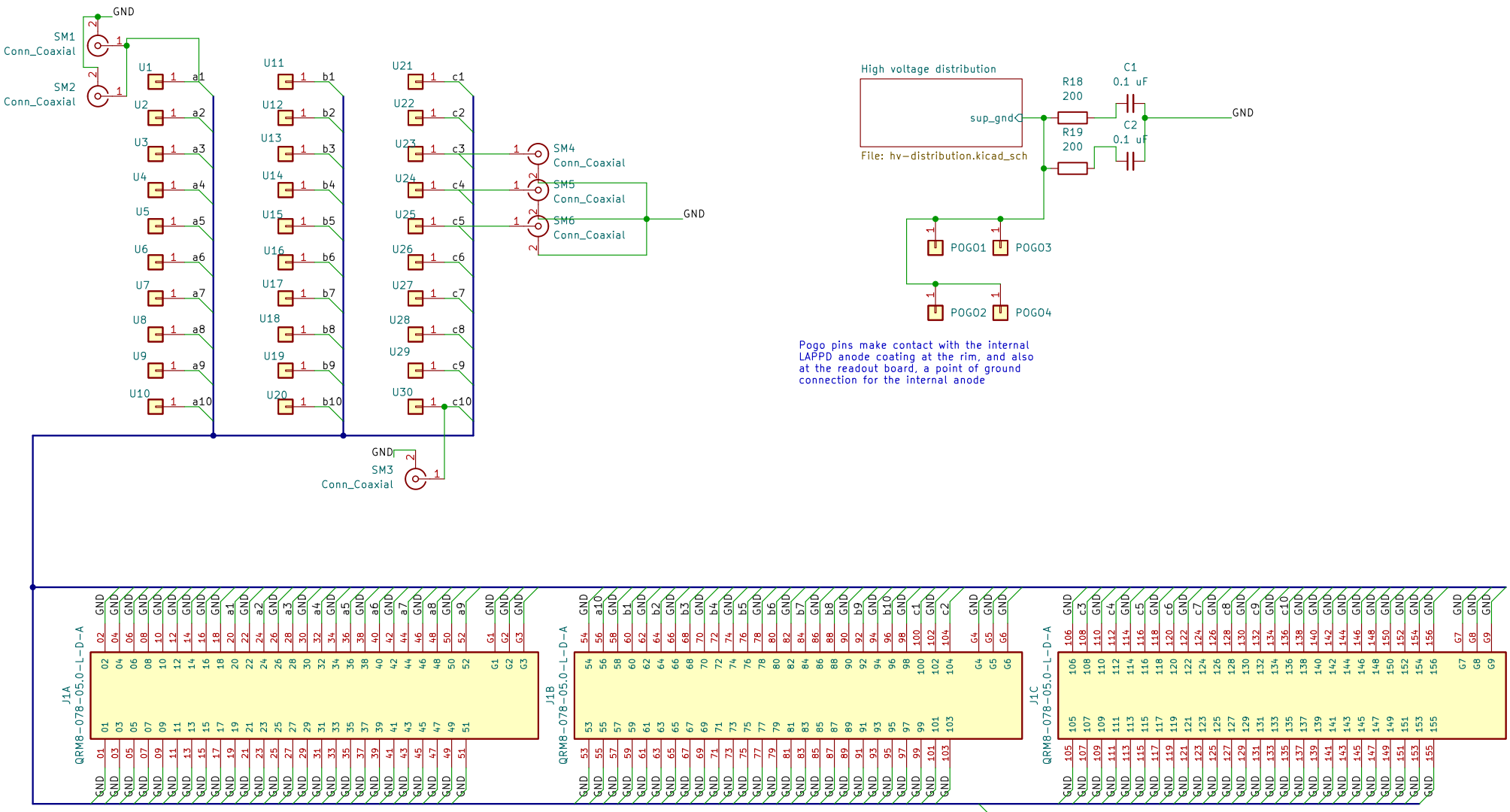

Sheet: /
File: stripline_anode.kicad_sch

Title:

Size: A4	Date:	**Rev:**
KiCad E.D.A. kicad (6.0.4-0)		Id: 1/2

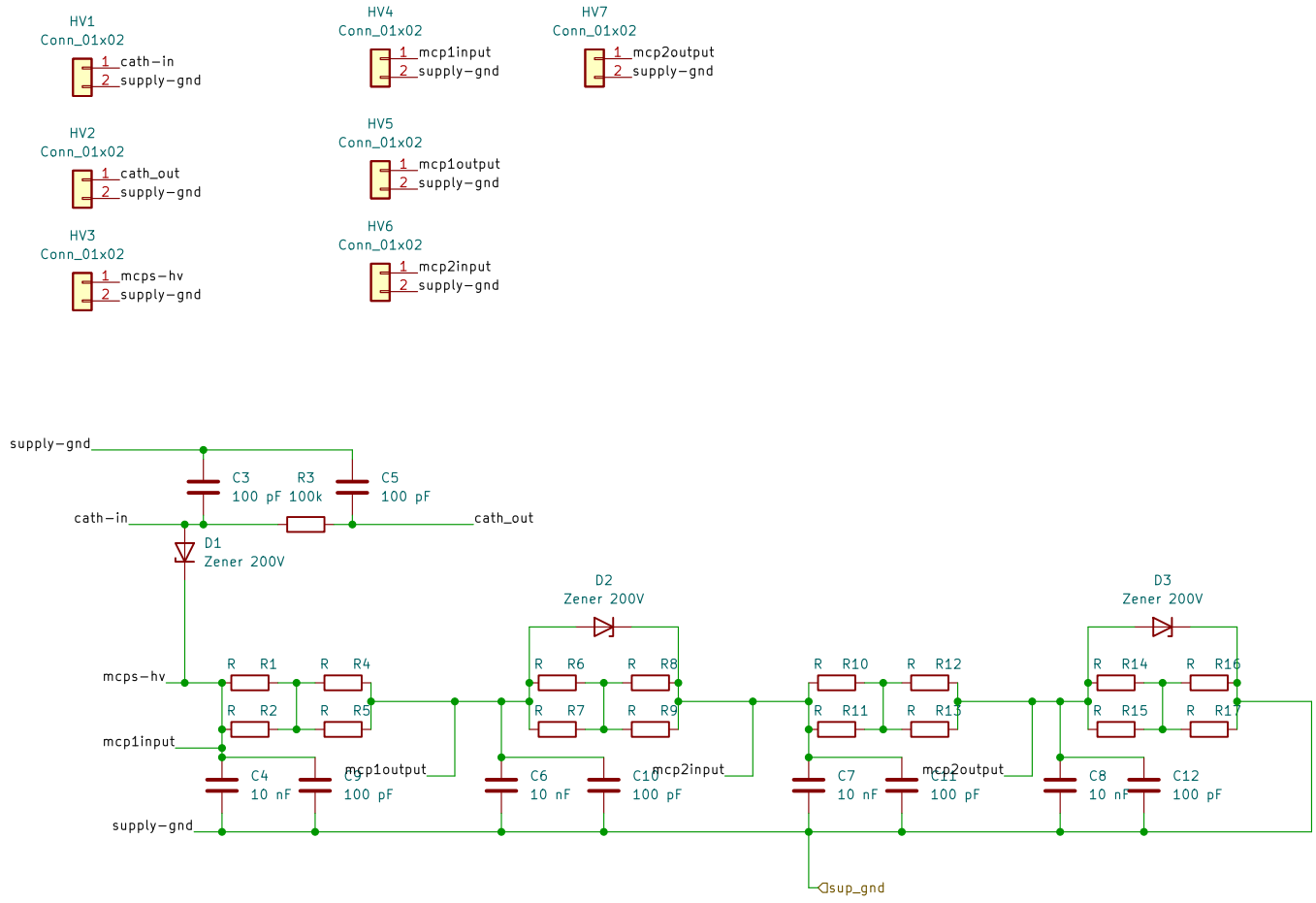

Sheet: /High voltage distribution/
File: hv-distribution.kicad_sch

Title:

Size: A4	Date:	**Rev:**
KiCad E.D.A. kicad (6.0.4-0)		Id: 2/2