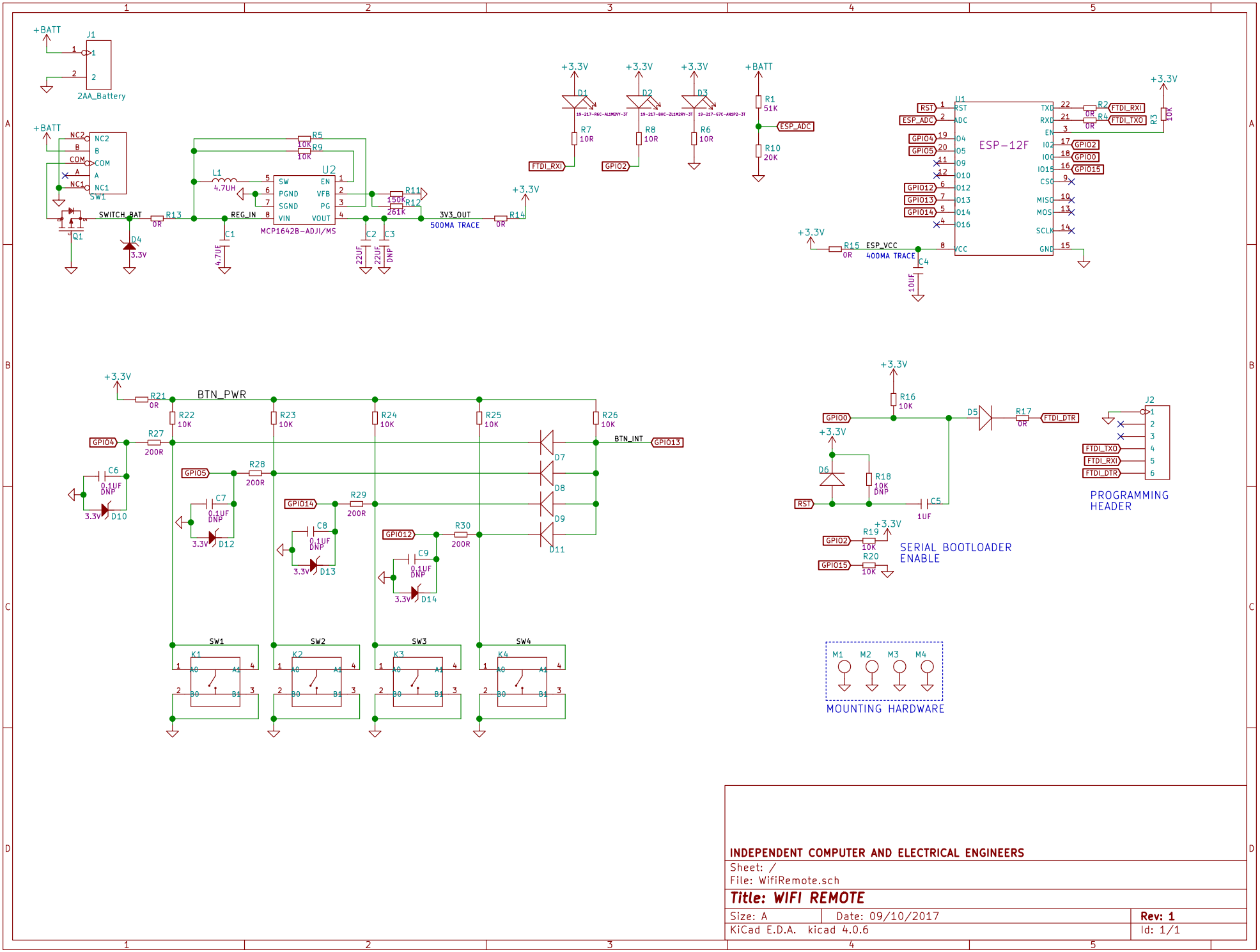

INDEPENDENT COMPUTER AND ELECTRICAL ENGINEERS

Sheet: /

File: WifiRemote.sch

Title: WIFI REMOTE

Size: A	Date: 09/10/2017	Rev: 1
KiCad E.D.A. kicad 4.0.6		Id: 1/1