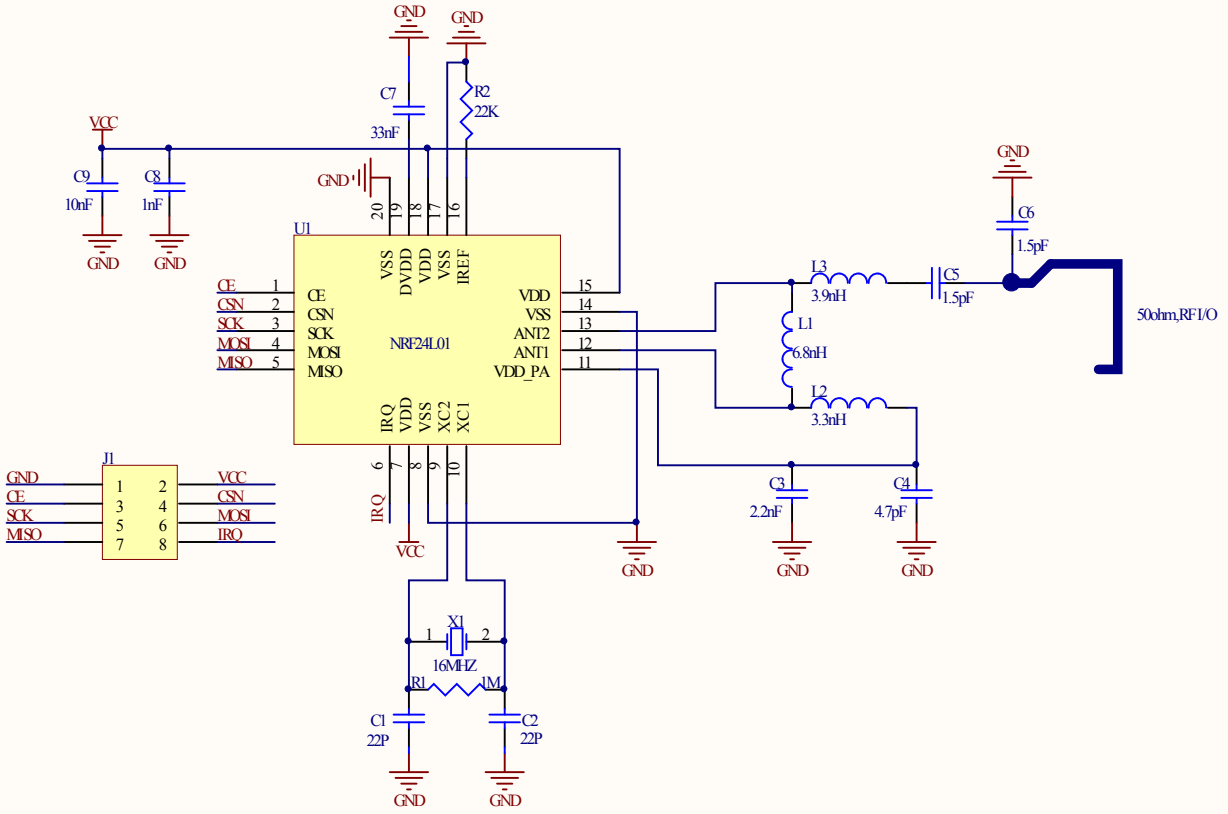


| Title | | |
|---|---|---|
| Size A4 | Number | Revision |
| Date: 2011-9-8 | | Sheet of |
| File: E:\ \..\NRF24L01.SchDoc | | Drawn By: |