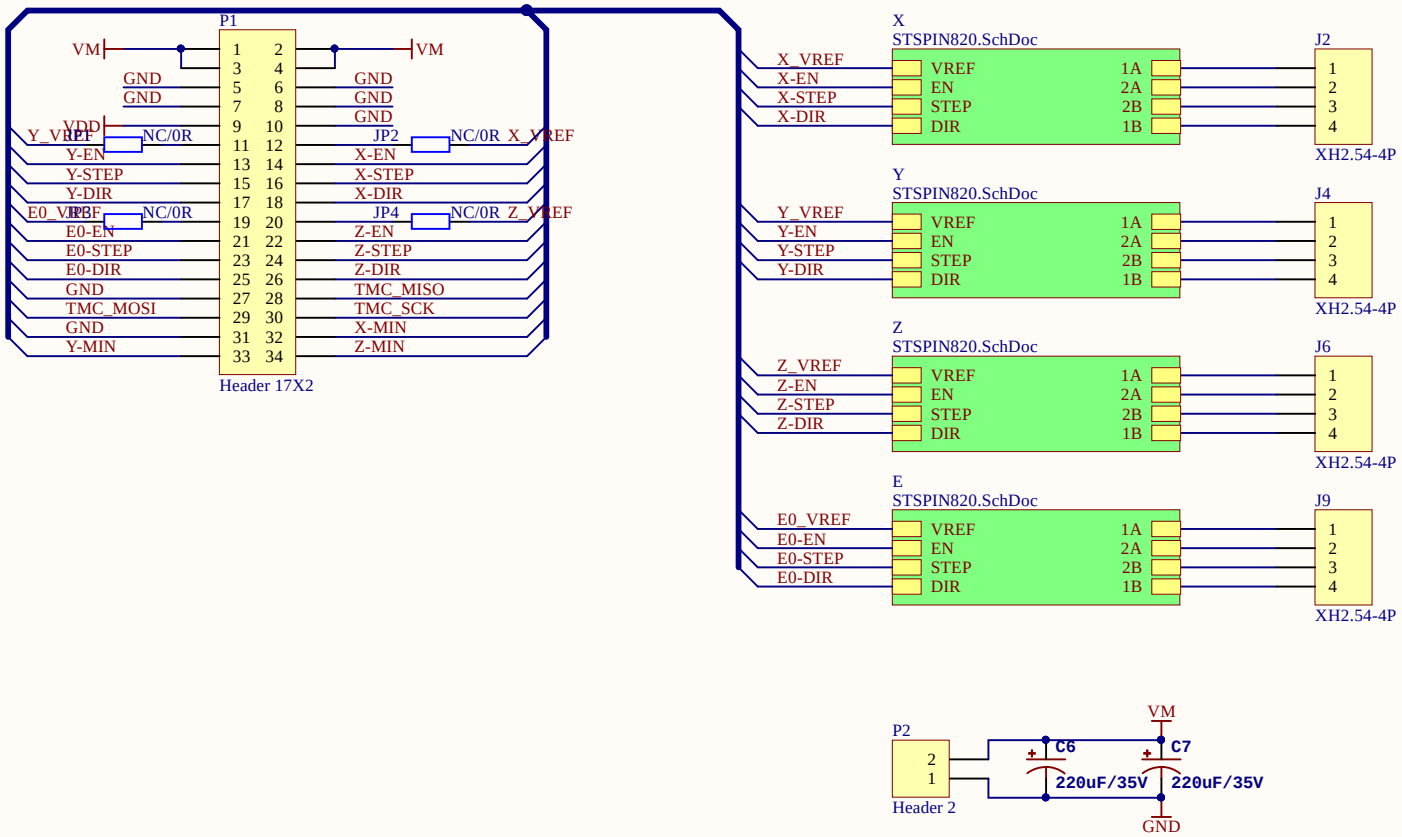

Title **Motor_Ctl**			*Altium Limited* *L3, 12a Rodborough Rd* *Frenchs Forest* *NSW* *Australia 2086*
Size: A4	Number: 6	Revision:	
Date: 2019/8/21	Time: 10:40:55	Sheet 6 of 8	
File: H:\硬件模块\32 AIO II\Motor_Ctl.SchDoc			

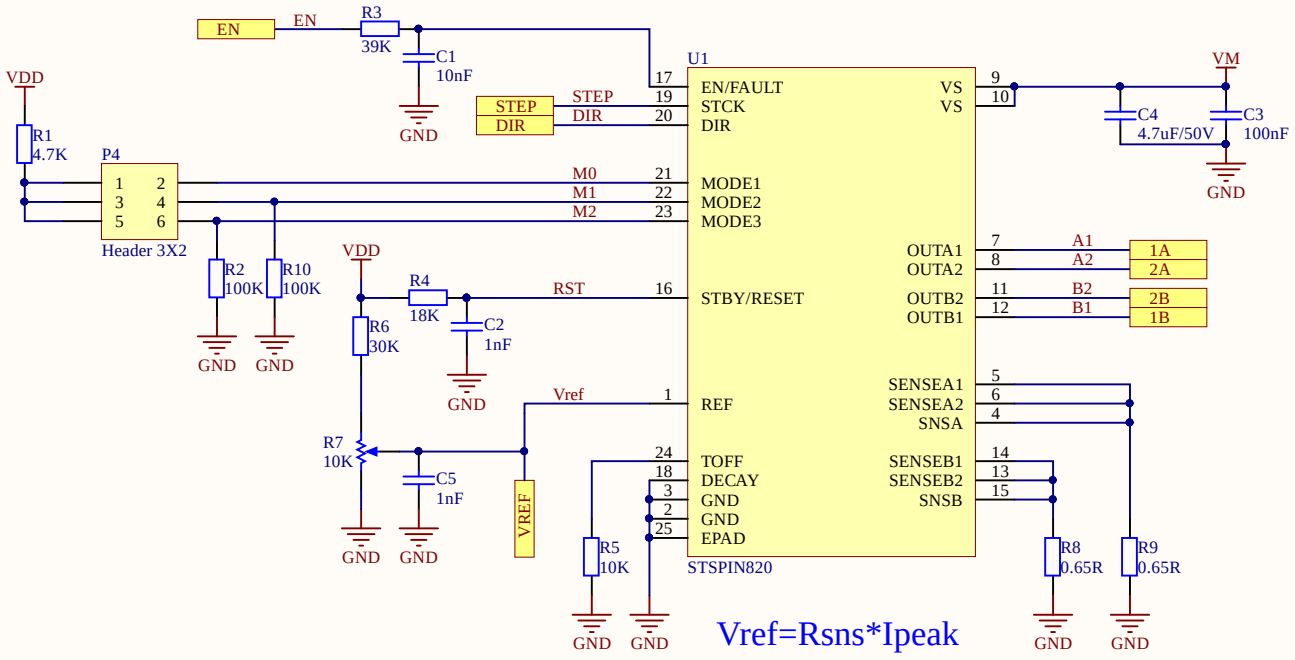

Title		
Size A4	Number	Revision
Date: 2019/8/21	Sheet of	
File: H:\硬件模块\32 AIO II\STSPIN820.SchDoc	Drawn By:	