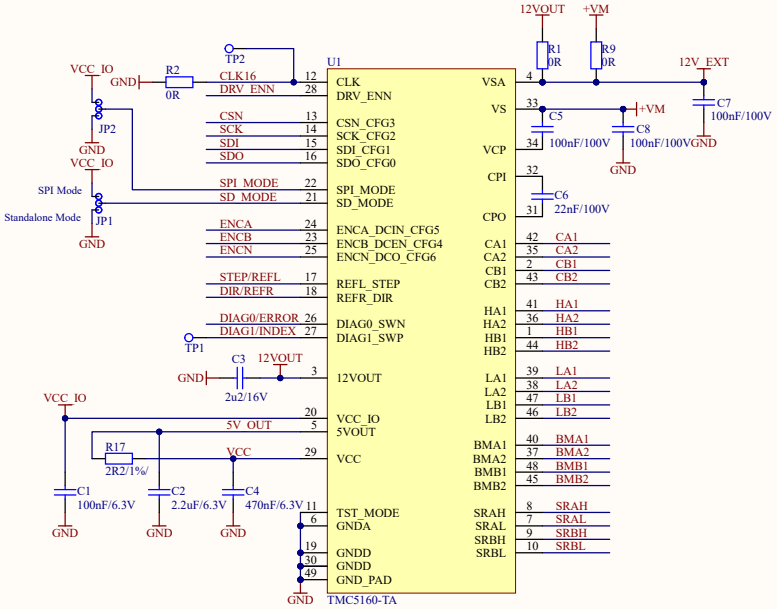

CHOICE OF R_{SENSE} AND RESULTING MAX. MOTOR CURRENT WITH *GLOBALSCALER=255*		
R_{SENSE} [Ω]	*RMS current [A] (CS=31)*	*Sine wave peak current [A] (CS=31)*
0.22	1.1	1.5
0.15	1.6	2.2
0.12	2.0	2.8
0.10	2.3	3.3
0.075	3.1	4.4
0.066	3.5	5.0
0.050	4.7	6.6
0.033	7.1	10.0
0.022	10.6	15.0

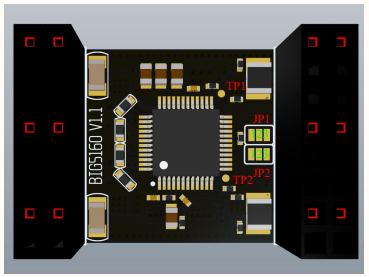

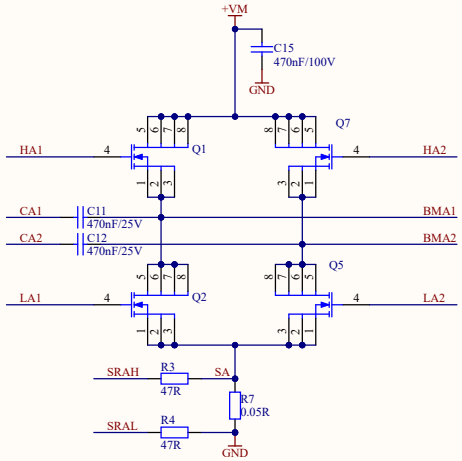

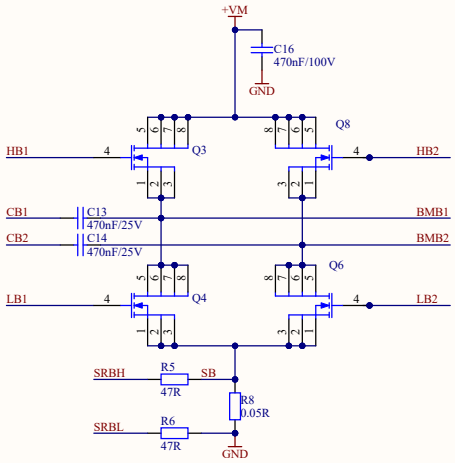

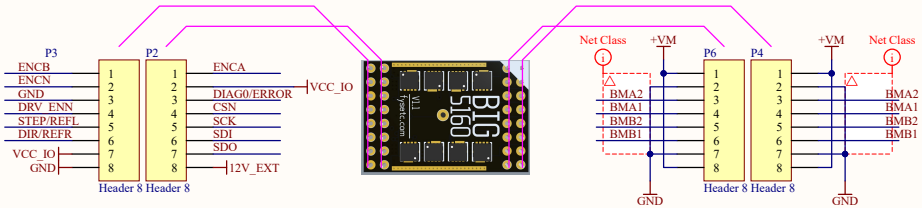

TMC5160_BOB

Title	BIG_5160.SchDoc		
Size: A3	Number: *	Revision: *	
Date: 2025/6/10	Author: *	Sheet * of *	

FYSETC® www.fysetc.com