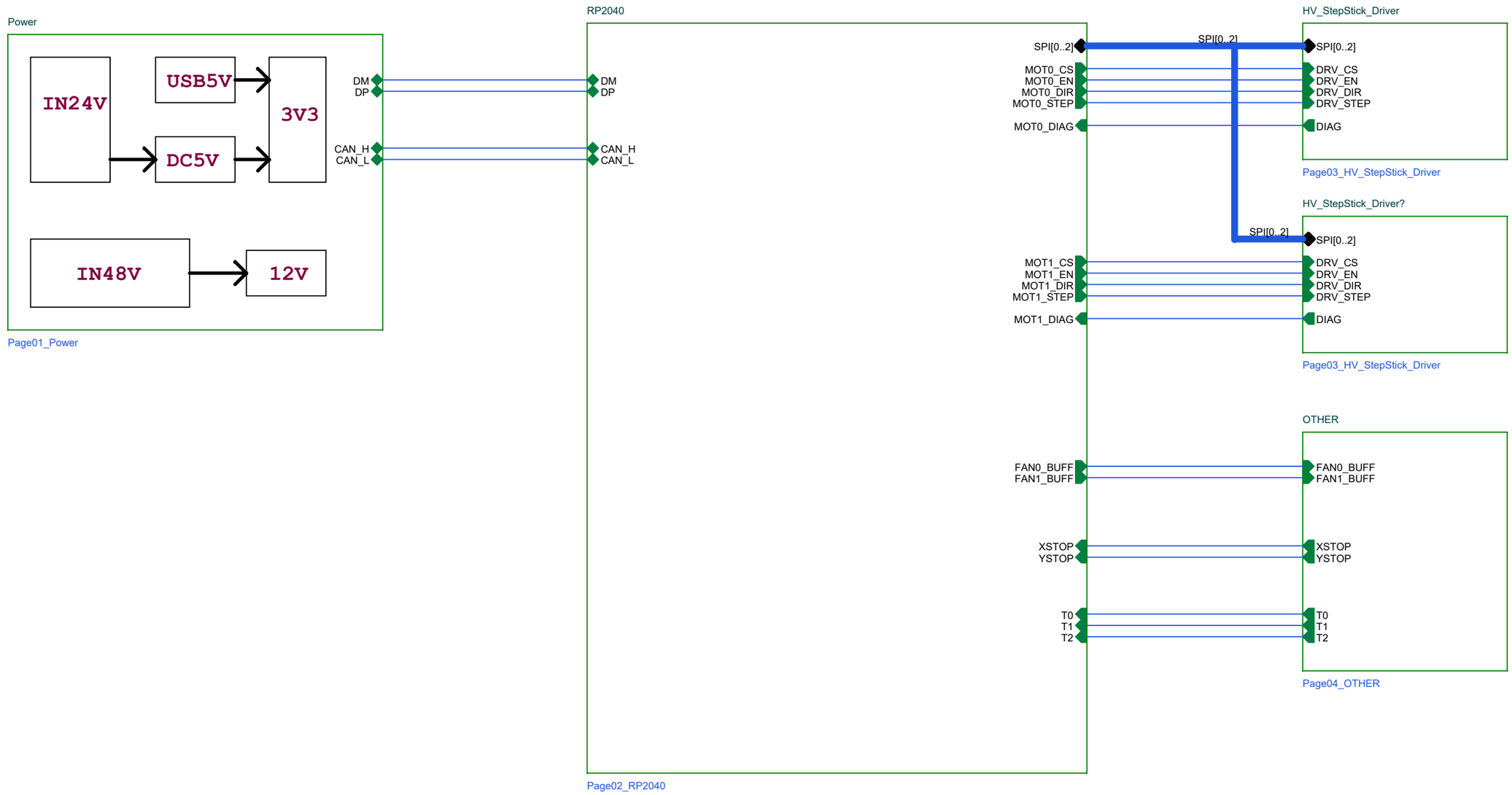

Design Name: **PITB**			
Size A3	Page Name: **Block_Diagram**		Rev v1.0
Date: Wednesday, February 21, 2024	Sheet 1 of 6		

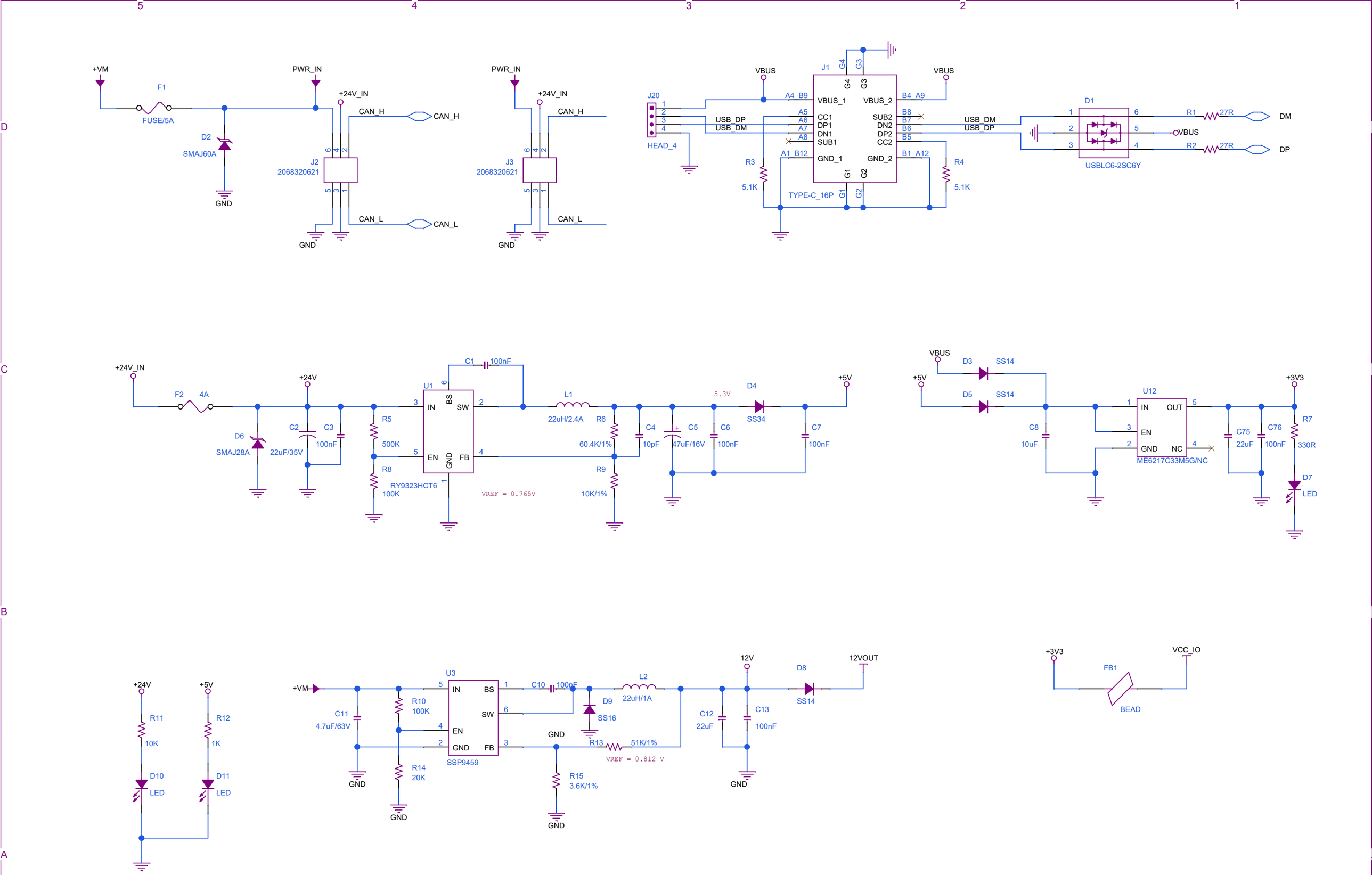

Design Name: **PITB**		
Size A3	Page Name: **Power**	Rev v1.0
Date: Wednesday, February 21, 2024	Sheet 2 of 6	

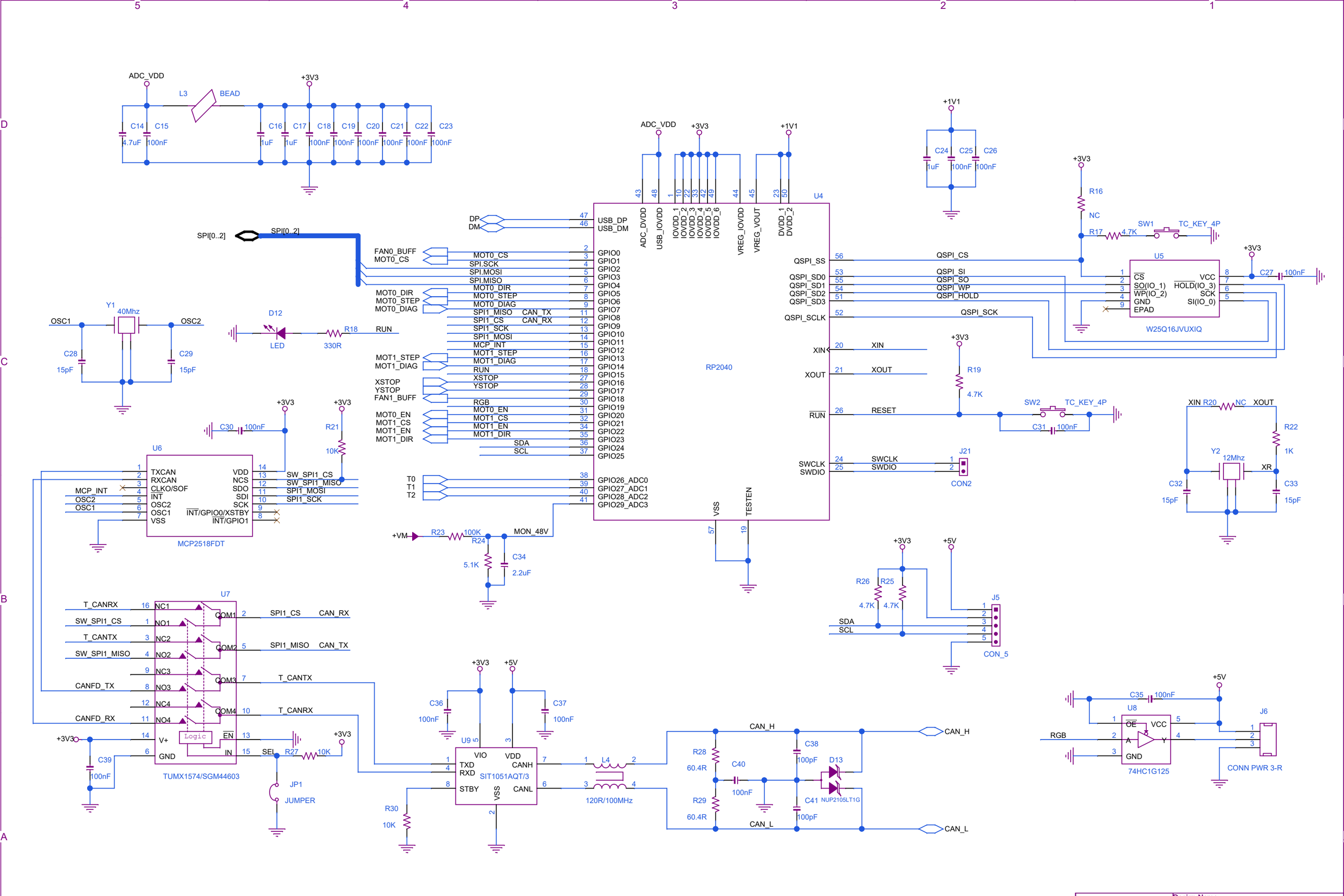

Design Name: **PITB**			
Size A3	Page Name: **RP2040**		Rev v1.0
Date: Wednesday, February 21, 2024	Sheet 3 of 6		

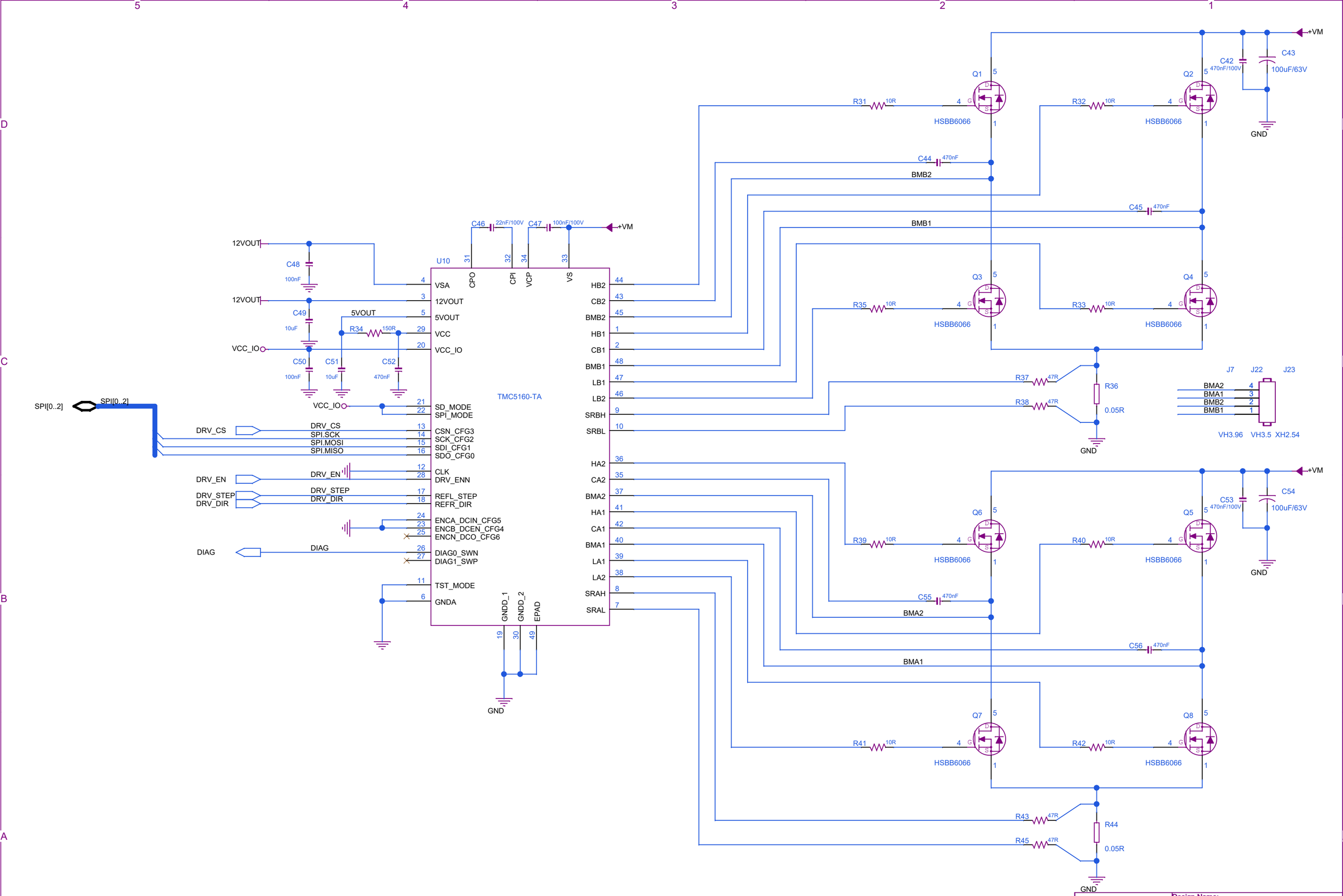

Design Name: **PITB**		
Size A3	Page Name: **StepStick_Driver_1**	Rev v1.0
Date: Wednesday, February 21, 2024	Sheet 4 of 6	

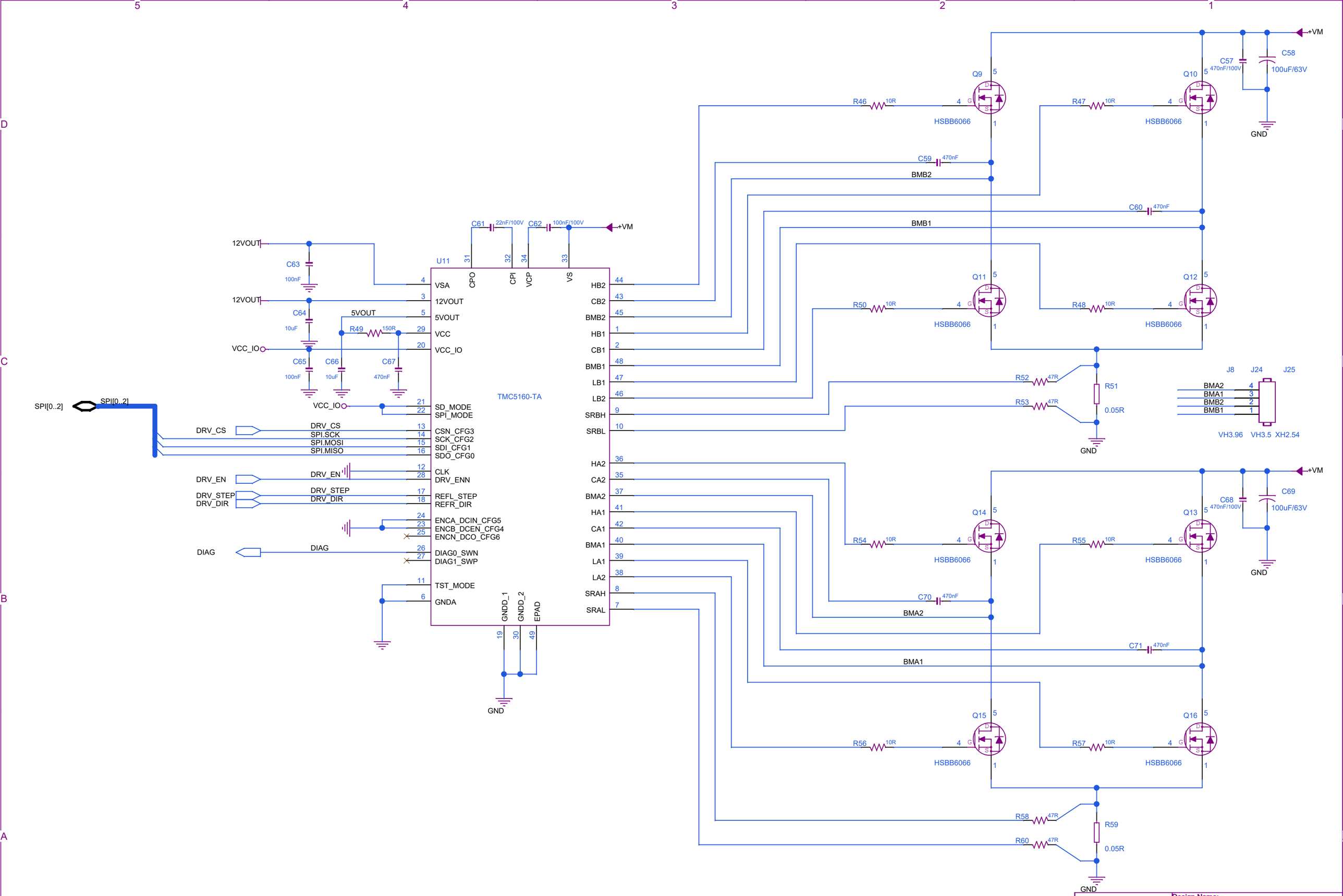

Design Name: **PITB**		
Size A3	Page Name: **StepStick_Driver_1**	Rev v1.0
Date: Wednesday, February 21, 2024	Sheet 5 of 6	

Fan

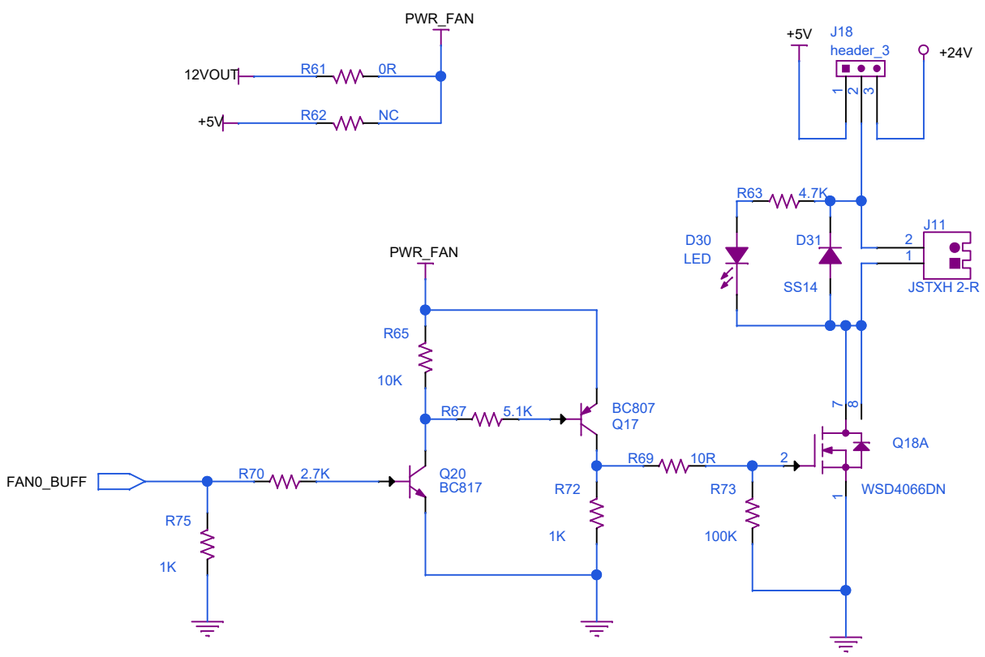

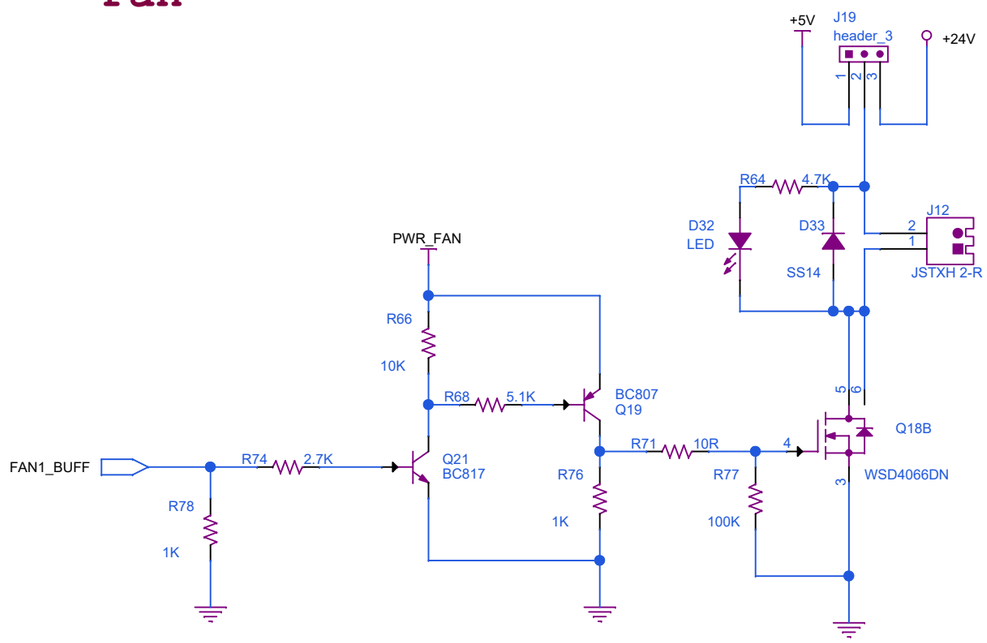

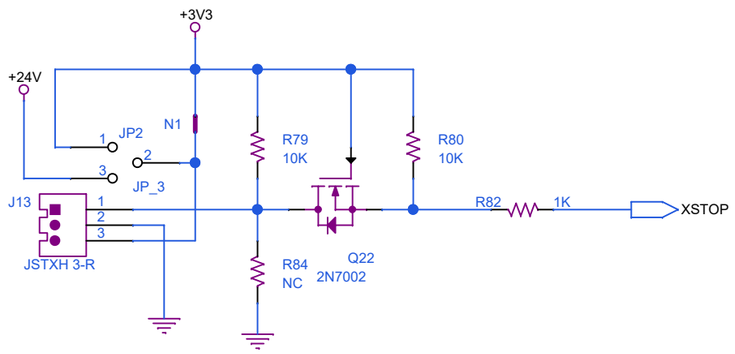

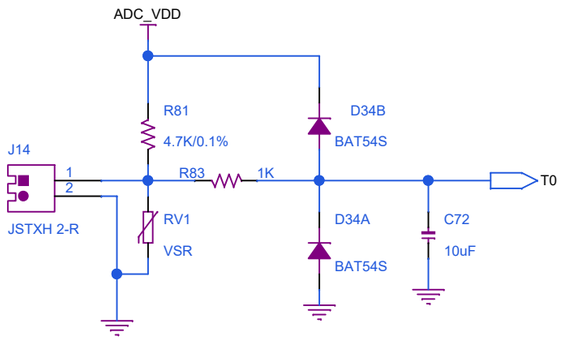

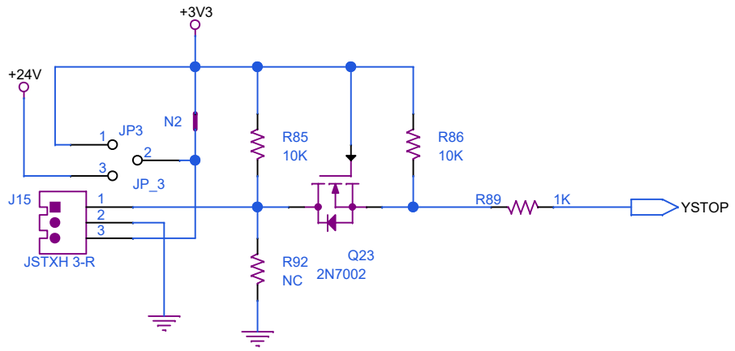

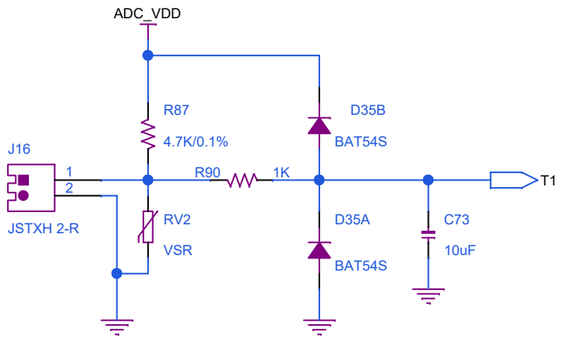

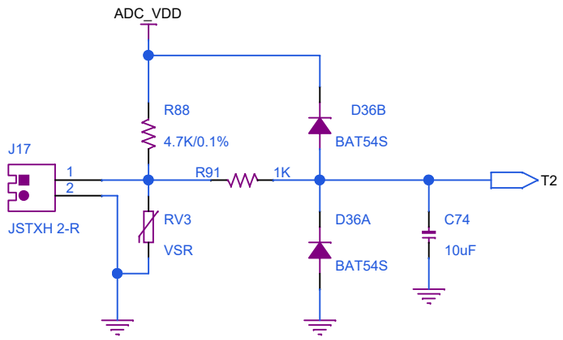

Design Name: **PITB**		
Size A3	Page Name: **OTHER**	Rev v1.0
Date: Wednesday, February 21, 2024	Sheet 6 of 6	