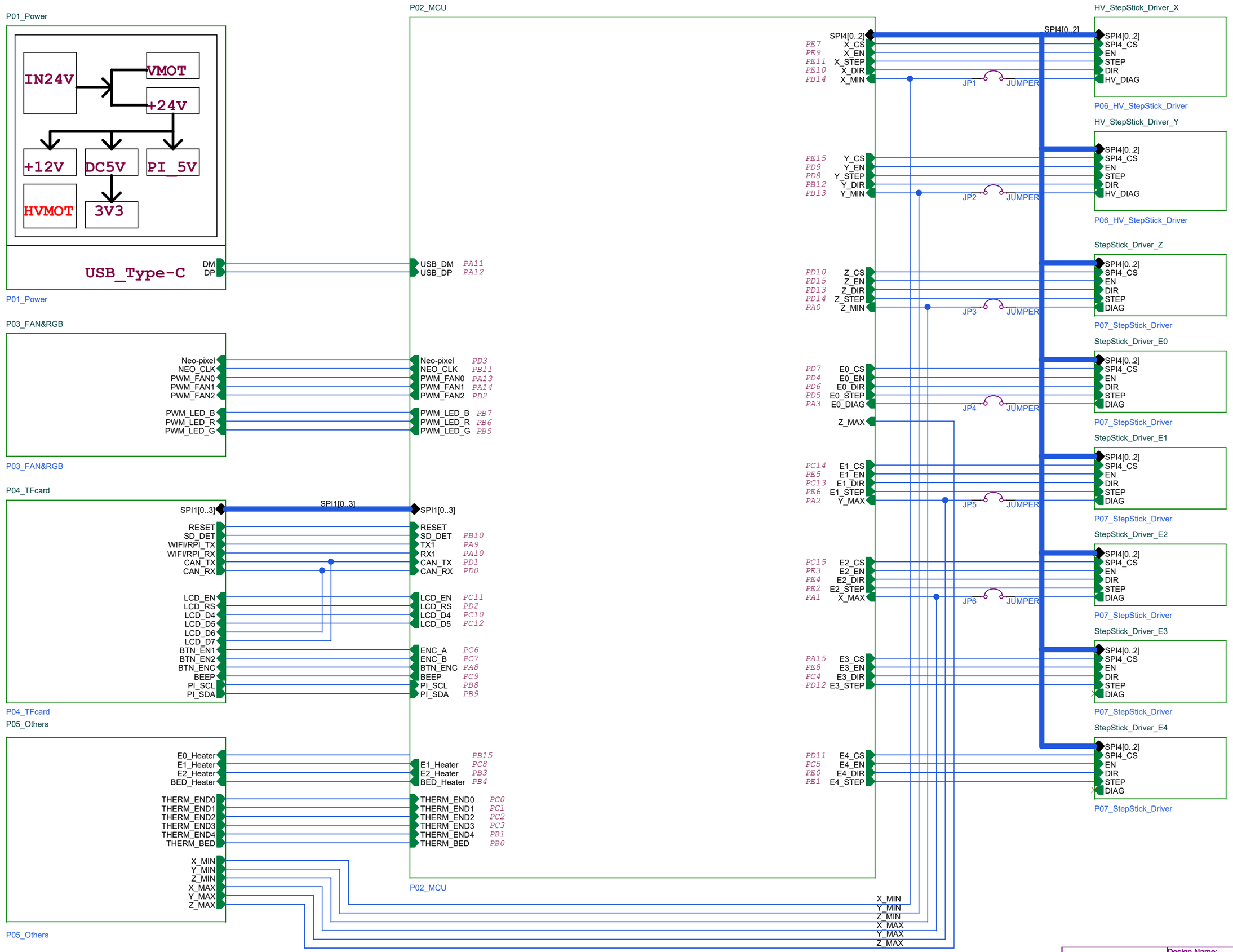

Design Name: **Spider_V3.0**			
Size A3	Page Name: **Block_Diagram**		Rev v3.0
Date: Wednesday, February 28, 2024	Sheet 1 of 14		

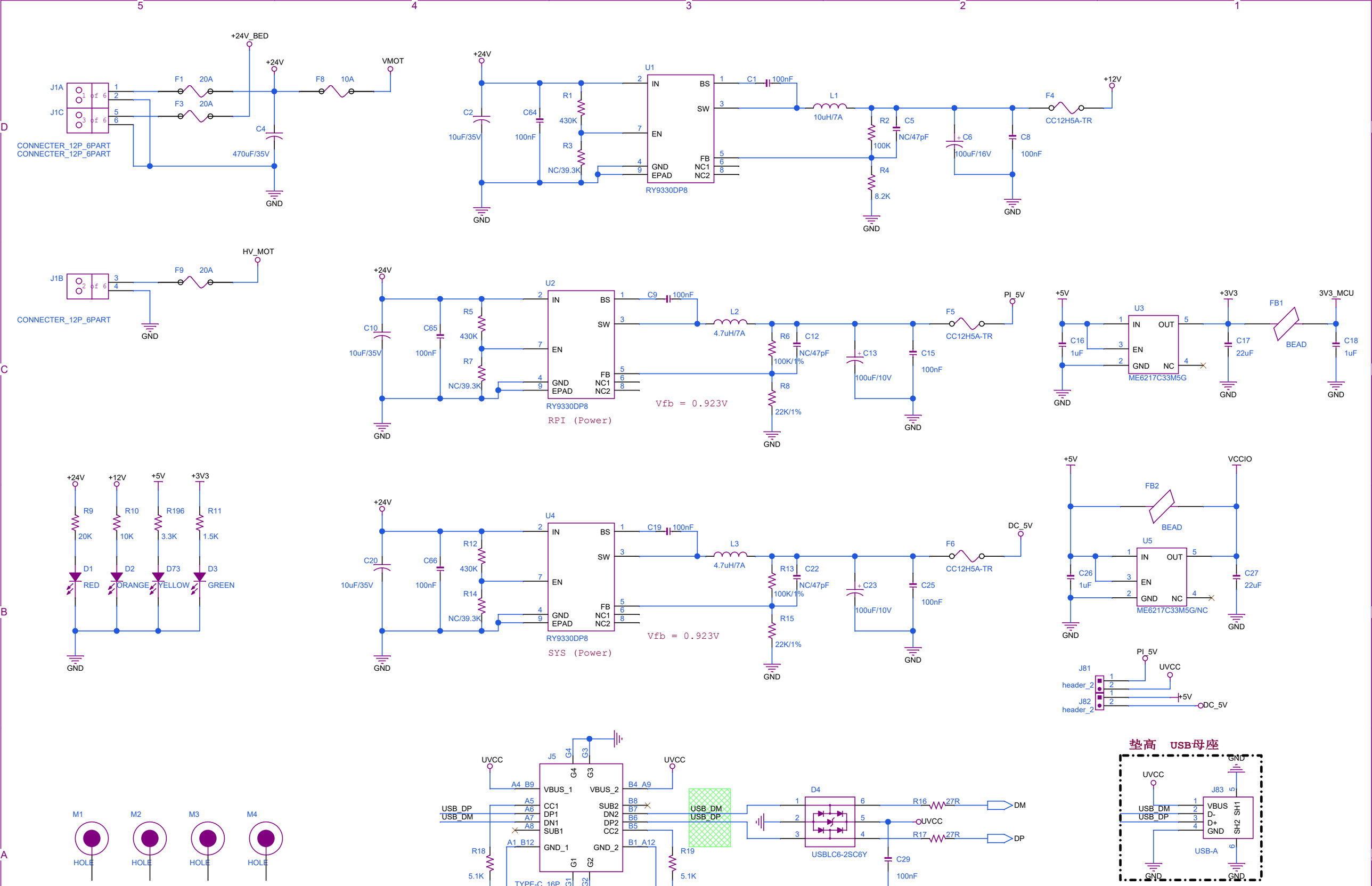

Design Name: **Spider_V3.0**		
Size A3	Page Name: **Power**	Rev v3.0
Date: Thursday, February 29, 2024	Sheet 2 of 14	

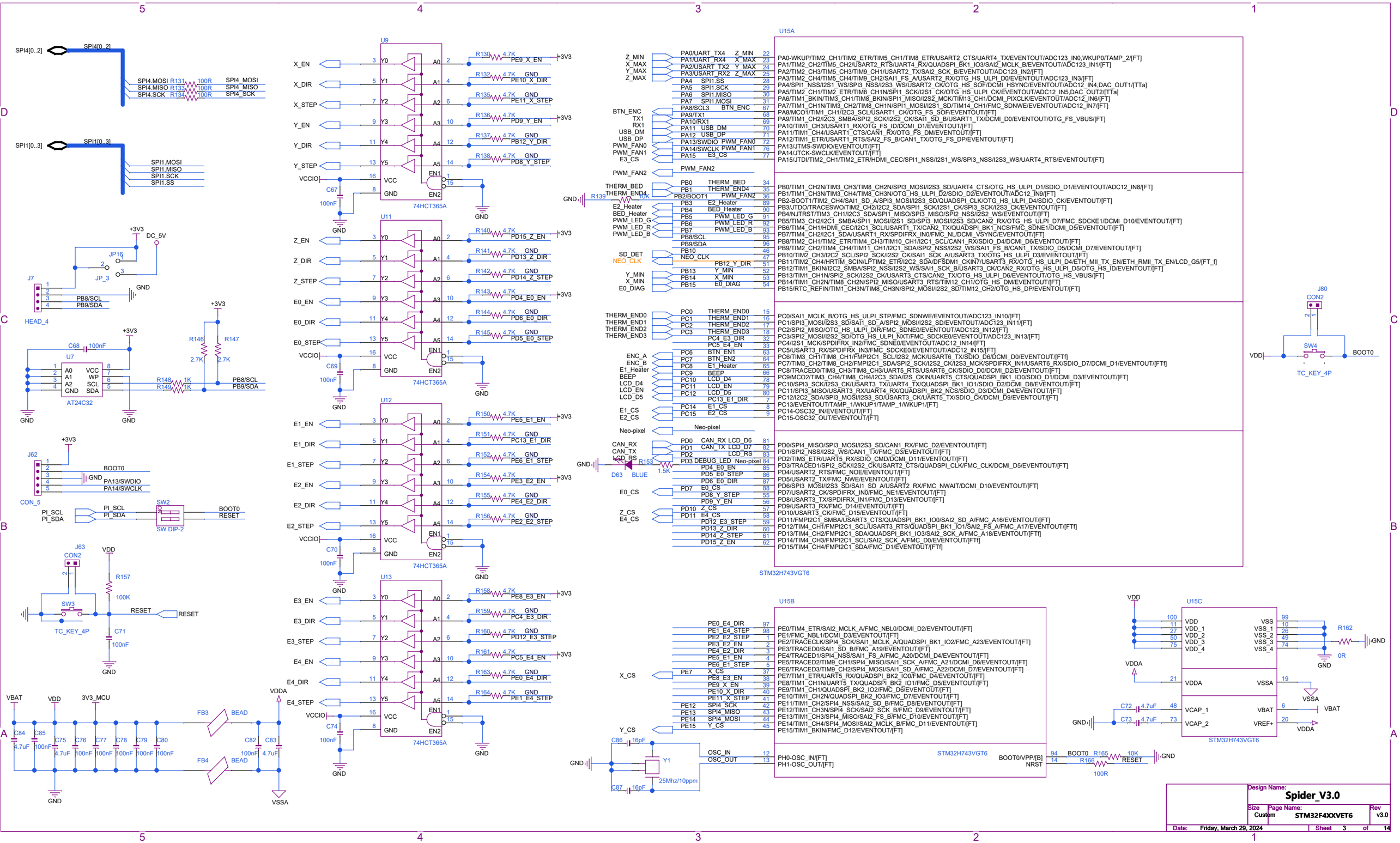
U9
74HCT365A
U11
74HCT365A
U12
74HCT365A
U13
74HCT365A
U15A
STM32H743VGT6
U15B
STM32H743VGT6
U15C
STM32H743VGT6
U7
AT24C32
J7
HEAD_4
J62
CON_5
J63
CON2
J80
CON2
TC_KEY_4P
SW DIP-2
Y1
25Mhz/10ppm
D63
BLUE
Design Name:
Spider_V3.0
Size
Custom
Page Name:
STM32F4XXVET6
Rev
v3.0
Date:
Friday, March 29, 2024
Sheet 3 of 14

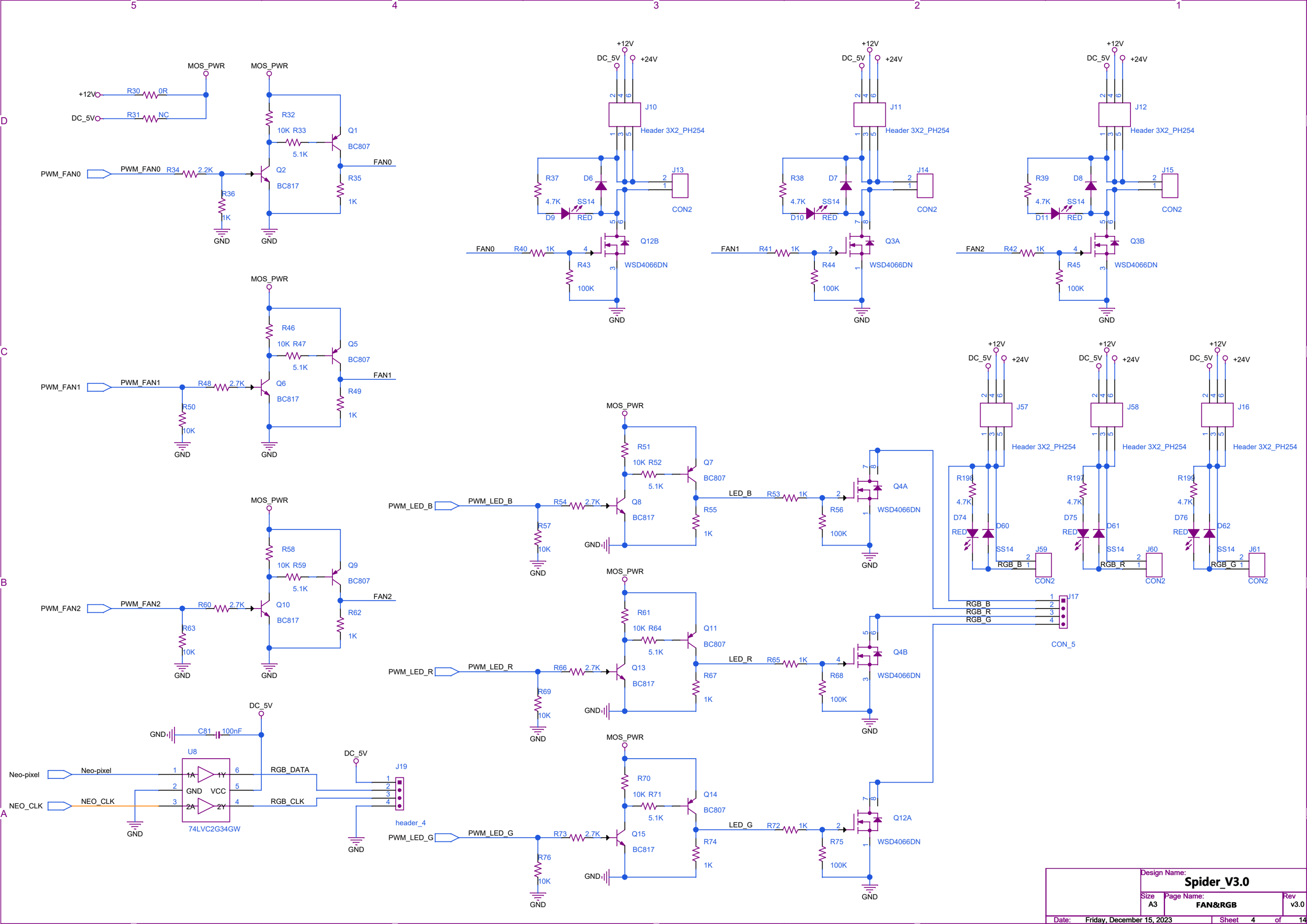

	Design Name: **Spider_V3.0**		
	Size A3	Page Name: **FAN&RGB**	Rev v3.0
Date: Friday, December 15, 2023		Sheet 4 of 14	

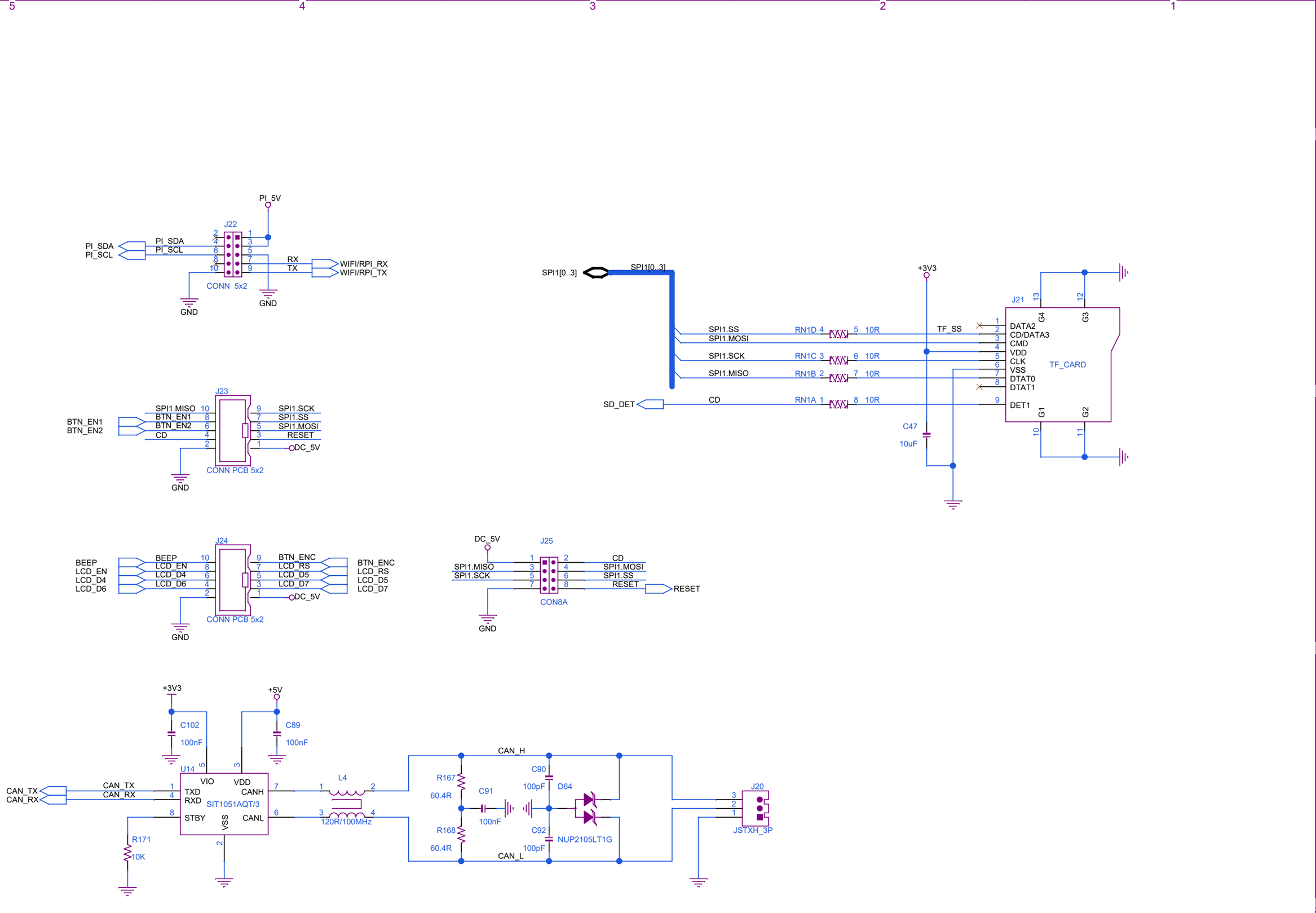

Design Name: **Spider_V3.0**		
Size A3	Page Name: **TFcard**	Rev v3.0
Date: Friday, December 15, 2023	Sheet 5 of 14	

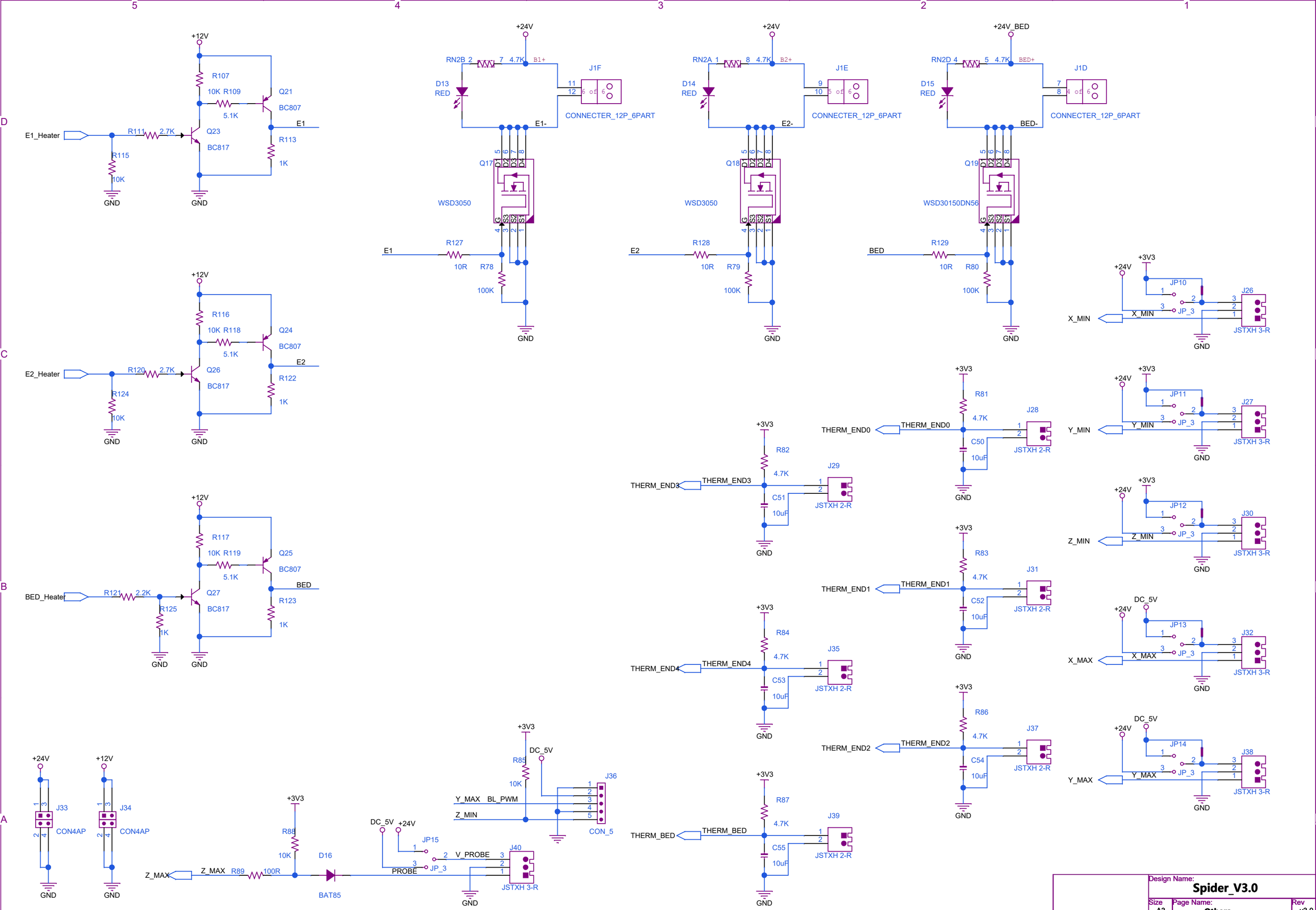

Design Name: **Spider_V3.0**		
Size A3	Page Name: **Others**	Rev v3.0
Date: Thursday, February 29, 2024	Sheet 6 of 14	

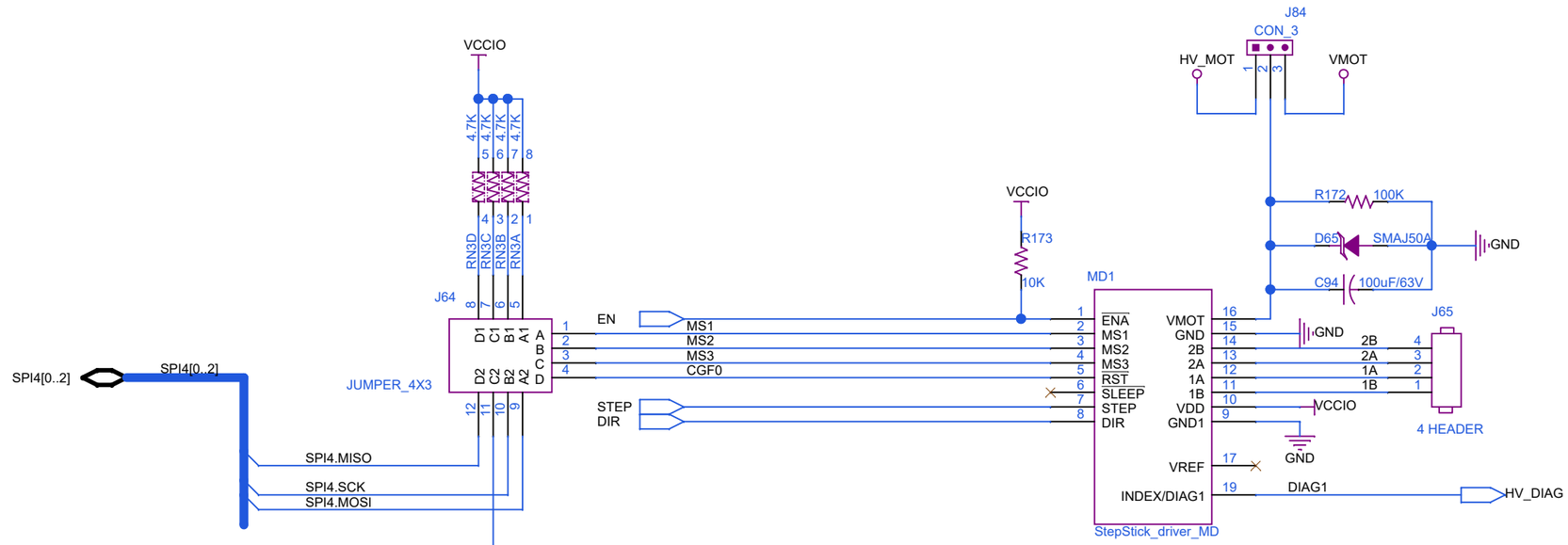

Design Name: **Spider_V3.0**		
Size A3	Page Name: **HV_StepStick_Driver**	Rev v3.0
Date: Thursday, February 29, 2024	Sheet 7 of 14	

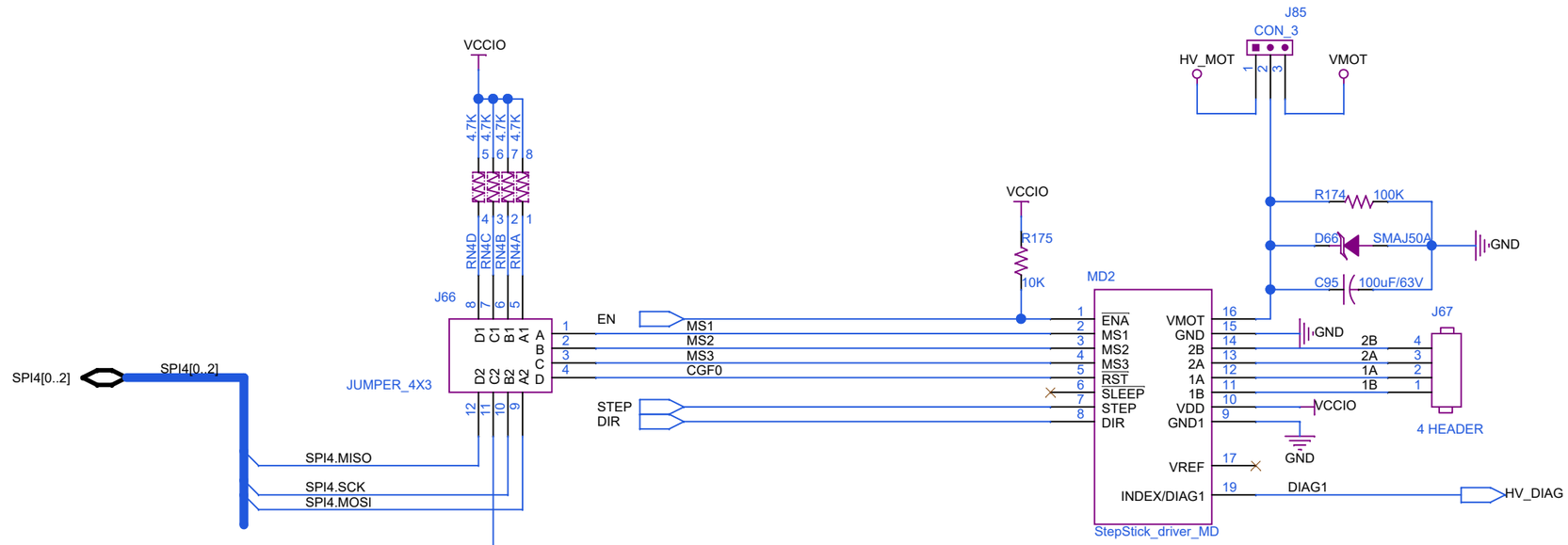

Design Name: **Spider_V3.0**		
Size A3	Page Name: **HV_StepStick_Driver**	Rev v3.0
Date: Thursday, February 29, 2024	Sheet 8 of 14	

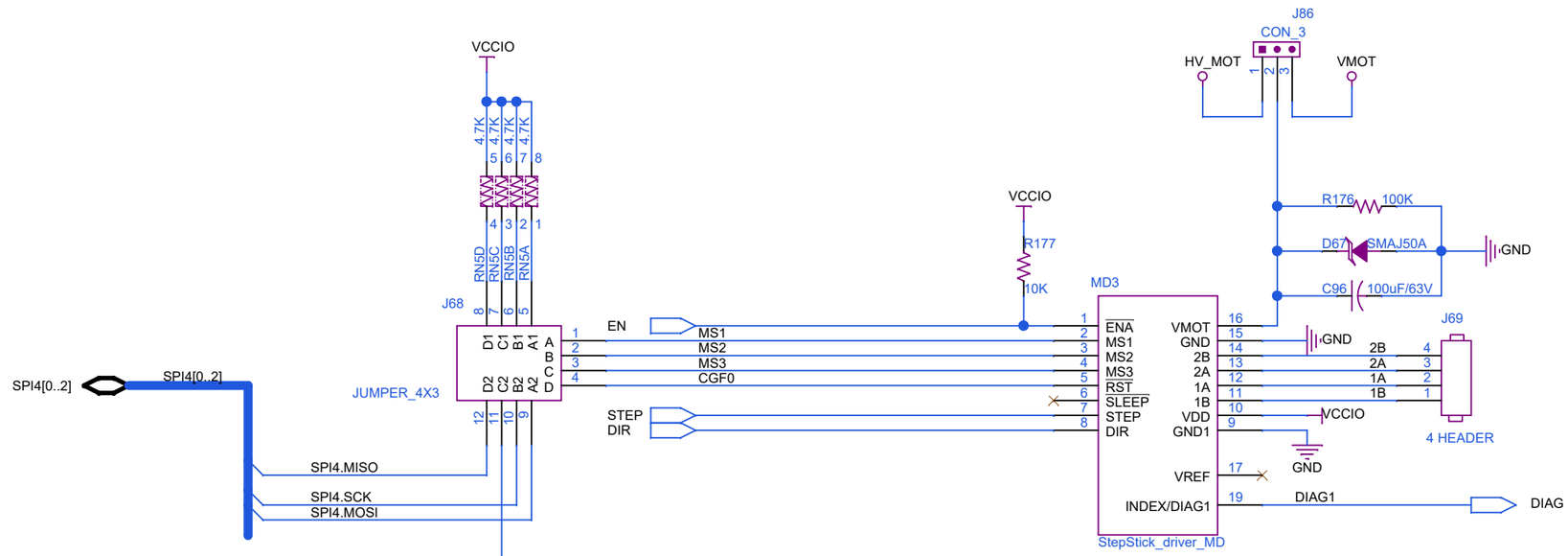

Design Name: **Spider_V3.0**		
Size A3	Page Name: **StepStick_Driver**	Rev v3.0
Date: Thursday, February 29, 2024	Sheet 9 of 14	

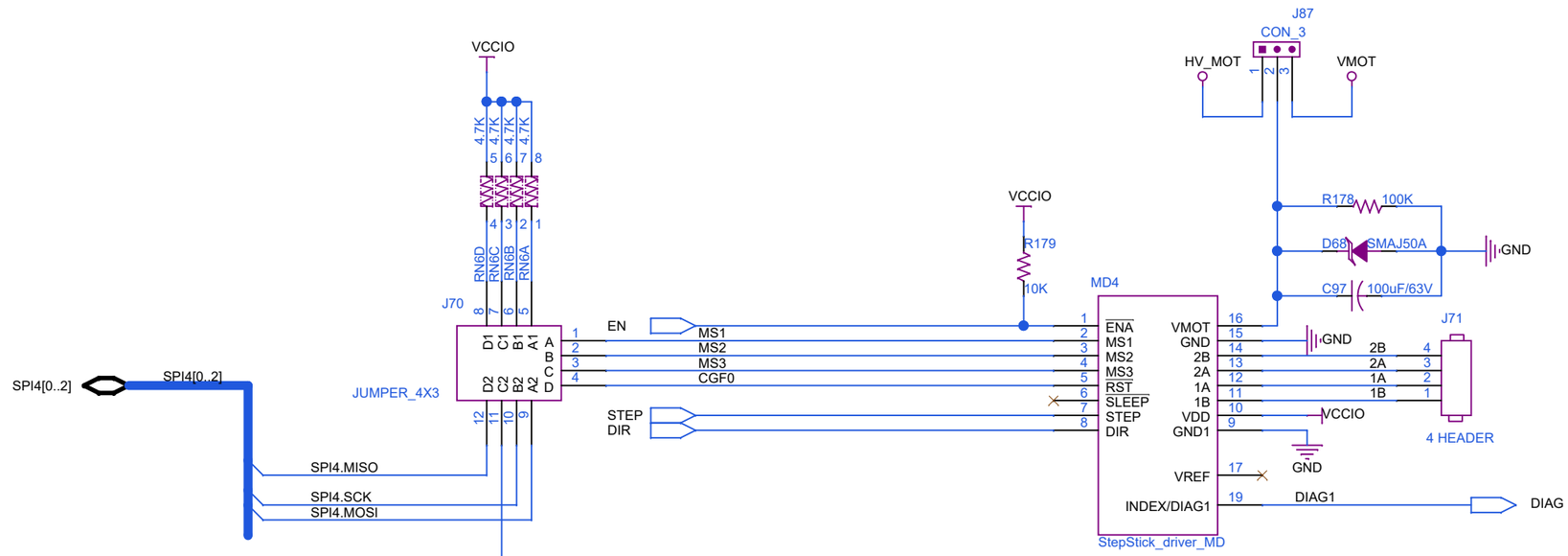

Design Name: **Spider_V3.0**		
Size A3	Page Name: **StepStick_Driver**	Rev v3.0
Date: Thursday, February 29, 2024	Sheet 10 of 14	

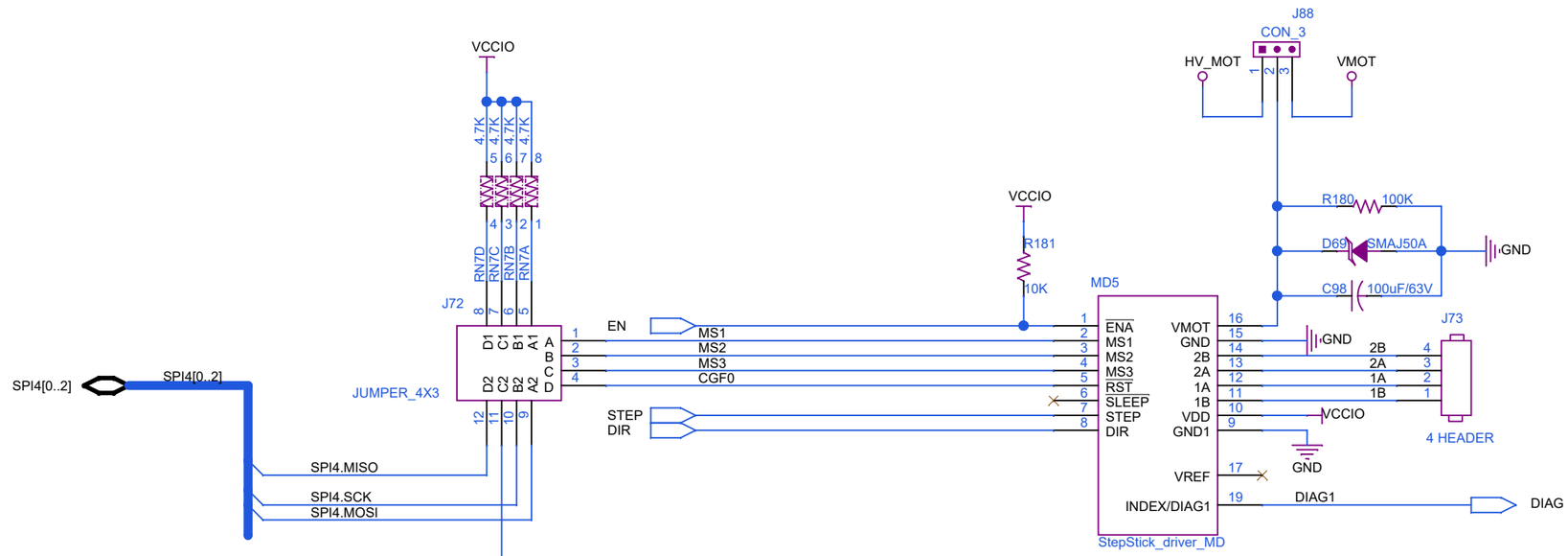

Design Name: **Spider_V3.0**		
Size A3	Page Name: **StepStick_Driver**	Rev v3.0
Date: Thursday, February 29, 2024	Sheet 11 of 14	

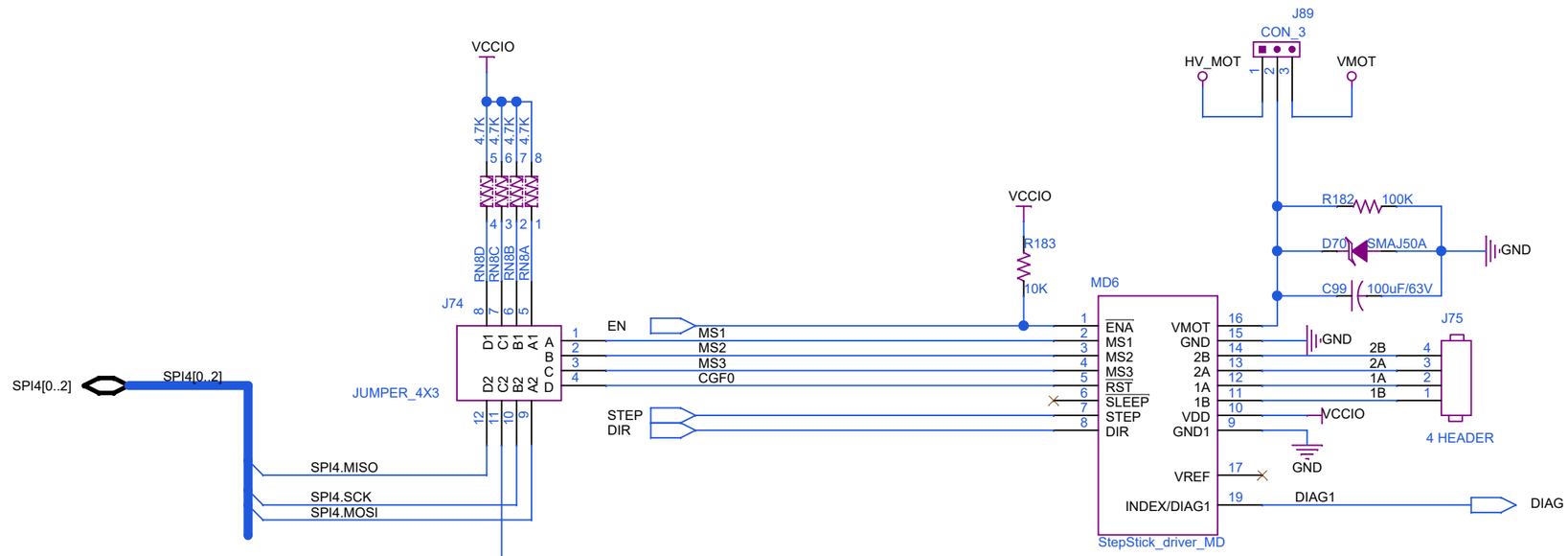

Design Name: **Spider_V3.0**		
Size A3	Page Name: **StepStick_Driver**	Rev v3.0
Date: Thursday, February 29, 2024	Sheet 12 of 14	

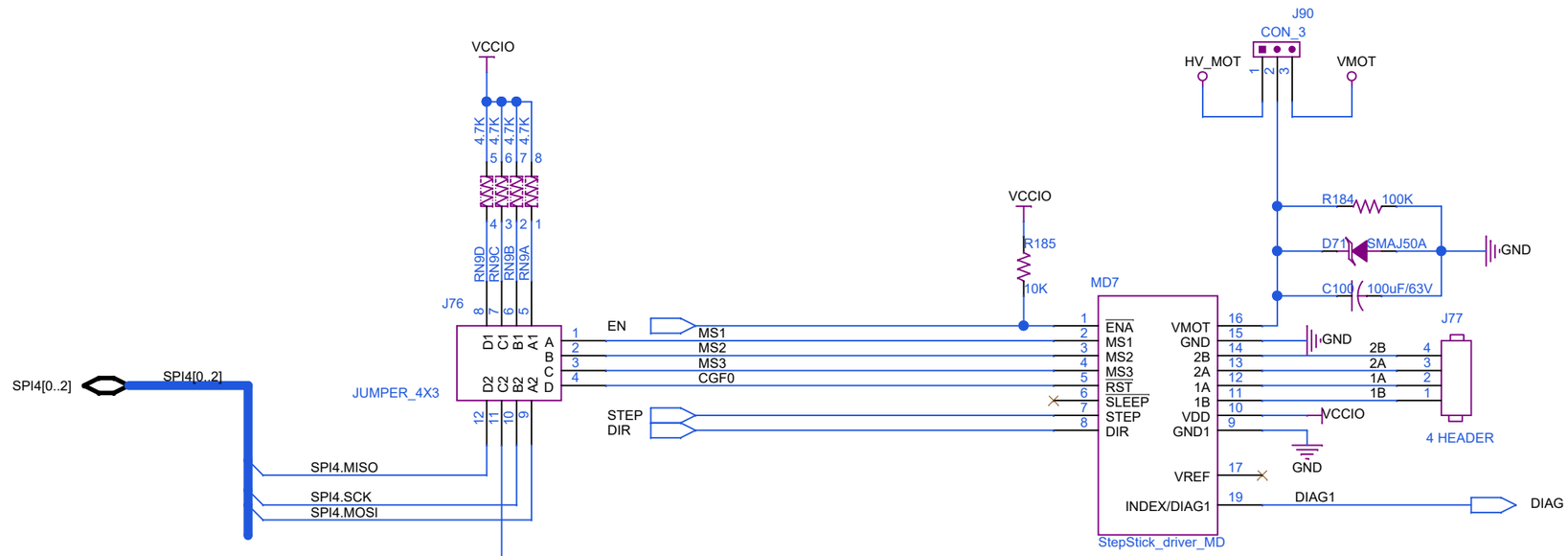

Design Name: **Spider_V3.0**		
Size A3	Page Name: **StepStick_Driver**	Rev v3.0
Date: Thursday, February 29, 2024	Sheet 13 of 14	

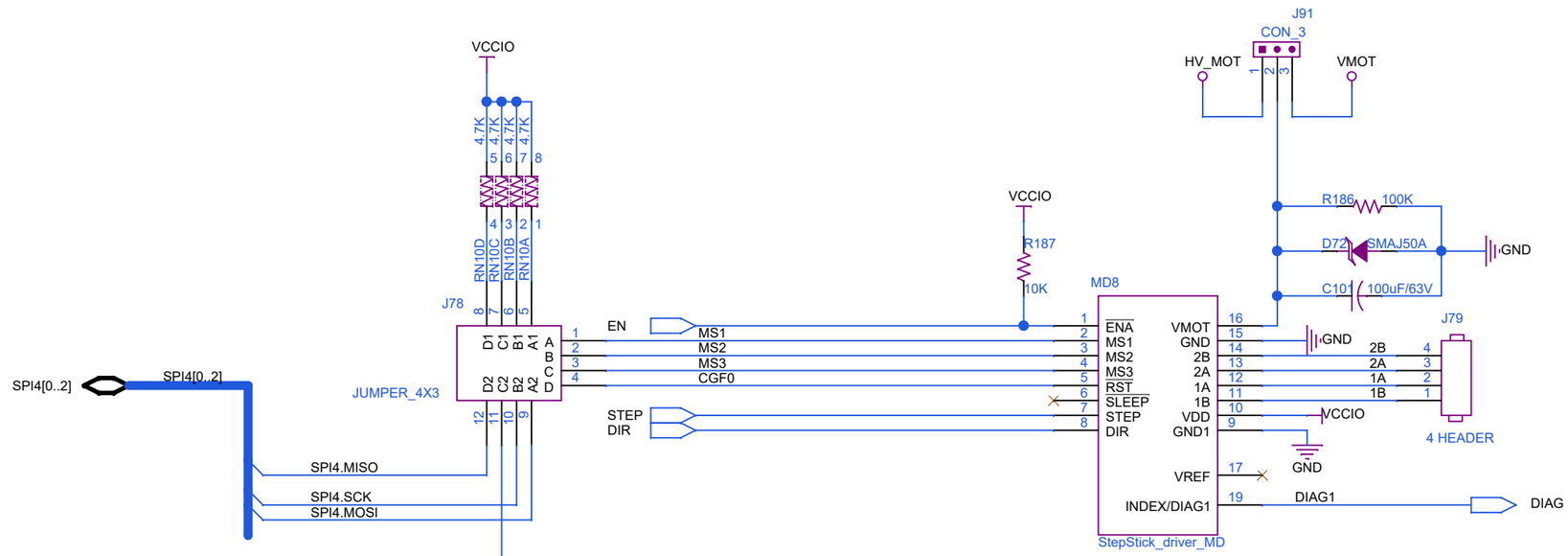

Design Name: **Spider_V3.0**		
Size A3	Page Name: **StepStick_Driver**	Rev v3.0
Date: Thursday, February 29, 2024	Sheet 14 of 14	