V1.0
First Release,

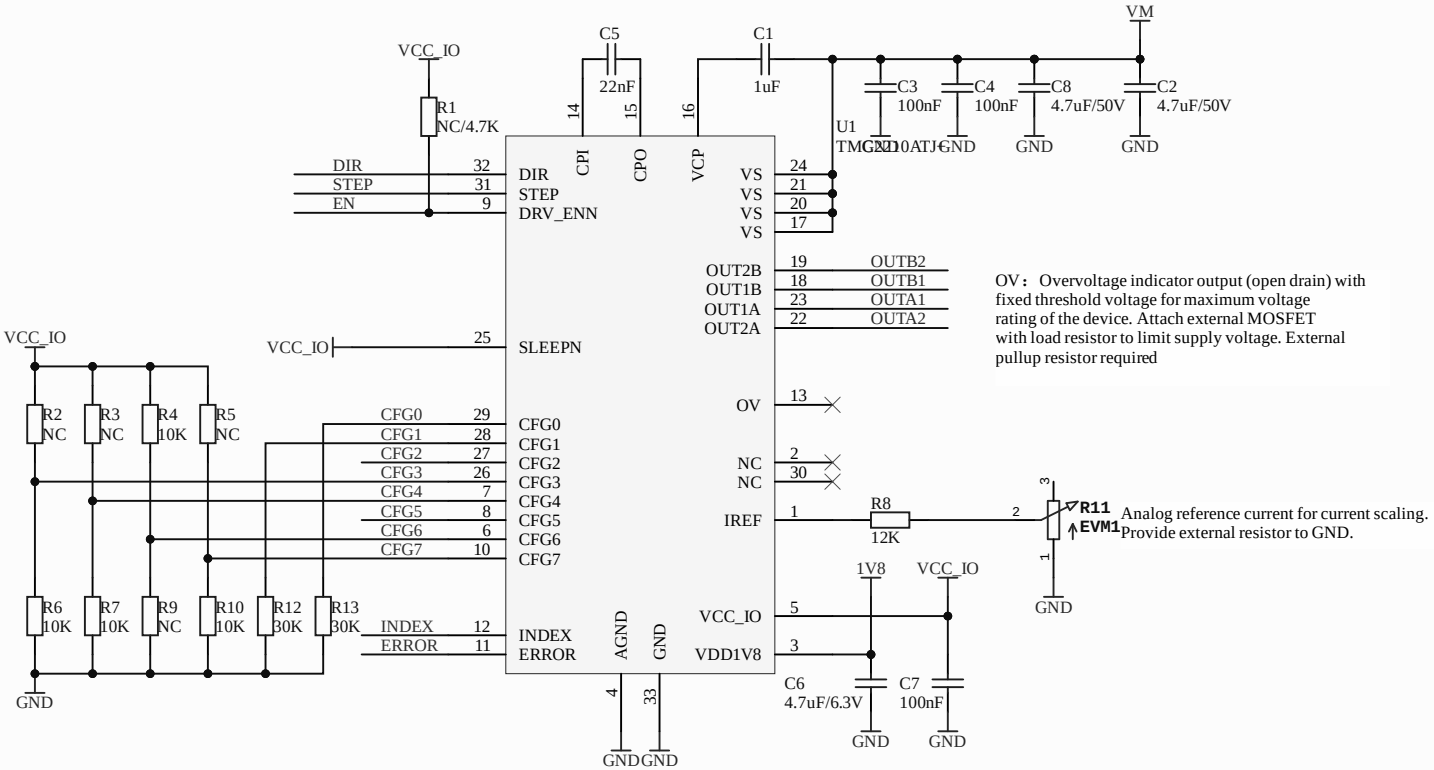

OV：Overvoltage indicator output (open drain) with fixed threshold voltage for maximum voltage rating of the device. Attach external MOSFET with load resistor to limit supply voltage. External pullup resistor required

Analog reference current for current scaling. Provide external resistor to GND.

ERROR：Open-drain error output. Use external pullup resistor.
In system reset state, this pin is actively pulled low to indicate reset condition to external controller.

INDEX：Open drain index pulse output indicating microstep 0 position of coil B.

CFG1	CFG0	Microstep resolution
Low	Low	8 microsteps
Low	High	16 microsteps
High	Low	32 microsteps
High	High	64 microsteps

CFG3	CFG2	Run current
Low	Low	1A peak
Low	High	2A peak
High	Low	3A peak
High	High	not used (3A peak)

CFG4	Digital current scale
Low	IRUN = 23 (75%)
High	IRUN = 31

CFG5	Chopper mode
Low	SpreadCycle
High	StealthChop

CFG7	CFG6	Hold current reduction
Low	Low	No reduction
Low	High	Reduction to 50%
High	Low	Reduction to 25%
High	High	Reduction to 12.5%

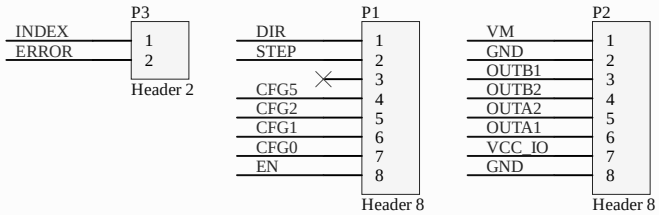

Table 1. TMC2210 Advanced Features

StealthChop2	No-noise, high-precision chopper algorithm for inaudible motion and standstill of the motor.
SpreadCycle	High-precision cycle-by-cycle current control for highest dynamic movements.
MicroPlyer	Microstep interpolator for full 256-microstep smoothness with low-resolution step inputs.

Title		
Size A4	Number	Revision
Date: 5-08-2023		Sheet of
File: D:\BaiduNetdiskWorkspace\..\TMC2210 V1.0.SchDoc		Drawn By: