V1.0
First Release, UART mode at Pin5
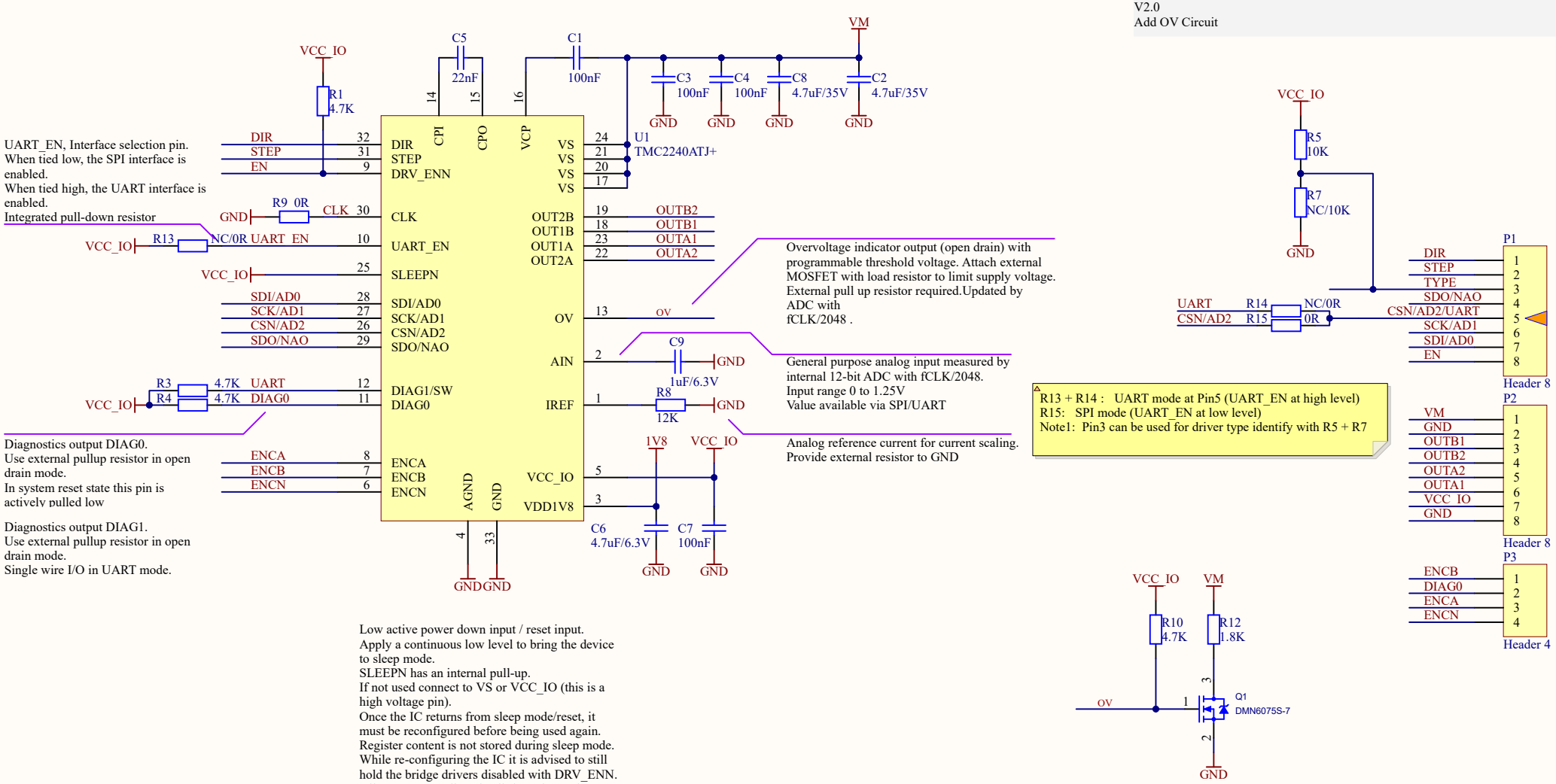
V2.0
Add OV Circuit