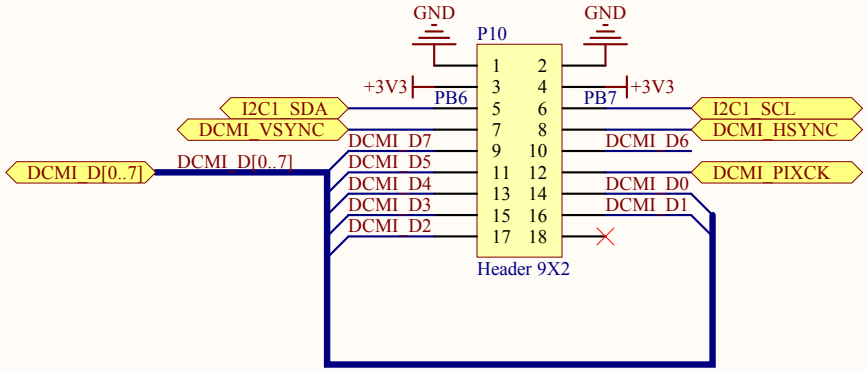

Title *			* * * * *
Size: A	Number:*	Revision:*	
Date: 12/20/2014	Time: 7:39:17 AM	Sheet * of *	
File: D:\WORK PLACE\Altium\PCB PROJECT\STM32F429_18Bit\Camera.SchDoc			

Altium

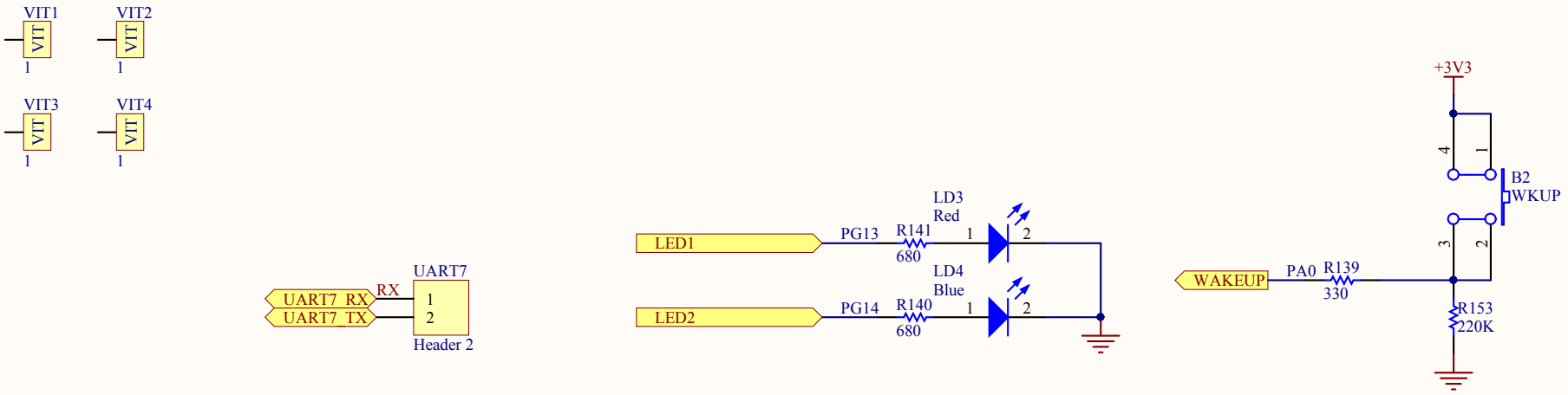

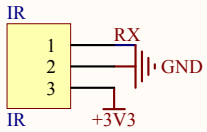

Title *			
Size: A	Number:*	Revision:	
Date: 12/20/2014	Time: 7:39:17 AM	Sheet * of *	
File: D:\WORK PLACE\Altium\PCB PROJECT\STM32F429_18Bit\IO Peripherals.SchDoc			MB786

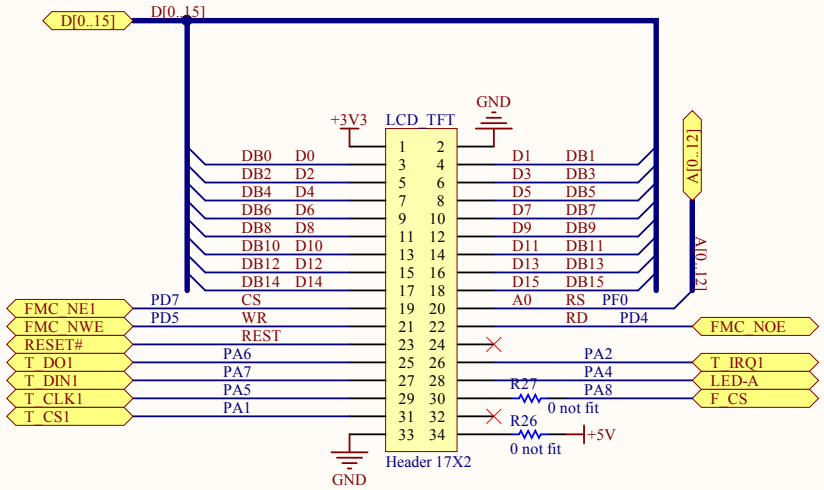

STMicroelectronics

Title: LCD

Number:	Rev:	Date: 8/31/2014	Sheet9 of 20

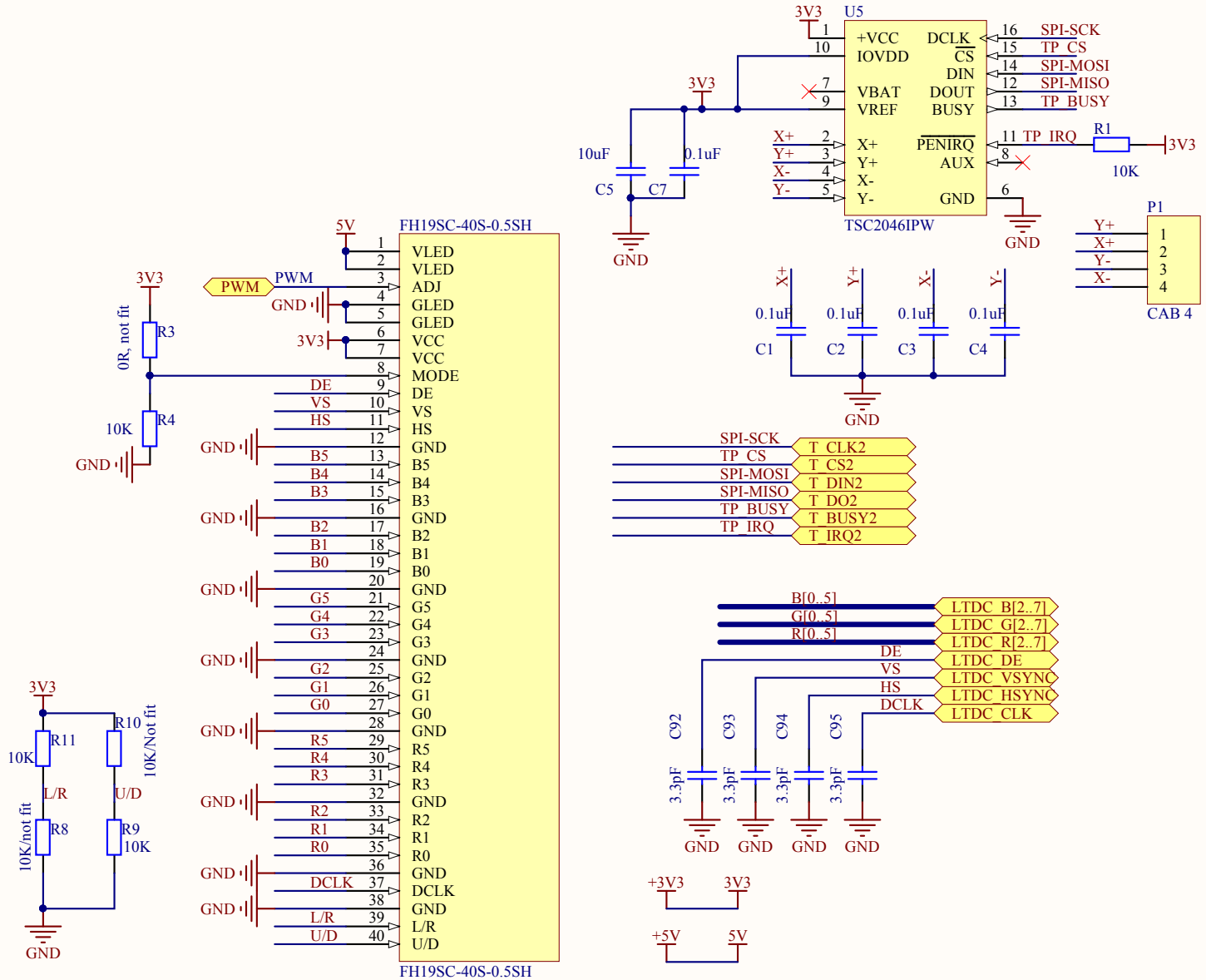

Title *		
Size: A	Number:*	Revision:*
Date: 12/20/2014	Time: 7:39:17 AM	Sheet * of *
File: D:\WORK PLACE\Altium\PCB PROJECT\STM32F429_18Bit\LCD_Module.SchDoc		

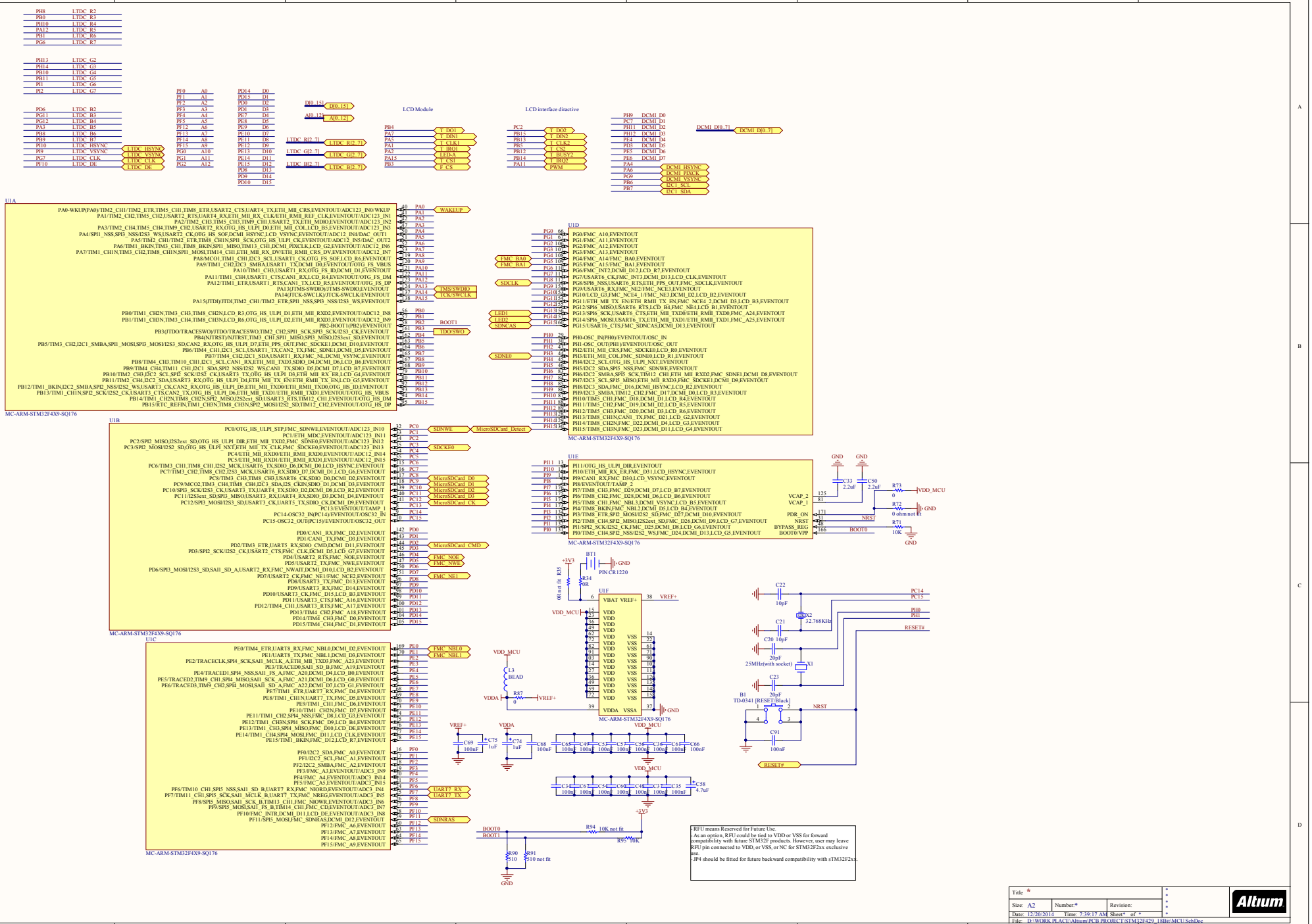
LCD Module
LCD interface diractive
U1A
MC-ARM-STM32F4X9-SQ176
U1B
MC-ARM-STM32F4X9-SQ176
U1C
MC-ARM-STM32F4X9-SQ176
U1D
MC-ARM-STM32F4X9-SQ176
U1E
MC-ARM-STM32F4X9-SQ176
U1F
MC-ARM-STM32F4X9-SQ176
RFU means Reserved for Future Use.
- As an option, RFU could be tied to VDD or VSS for forward compatibility with future STM32F products. However, user may leave RFU pin connected to VDD, or VSS, or NC for STM32F2xx exclusive use.
- JP4 should be fitted for future backward compatibility with sTM32F2xx.
Title *
Size: A2
Number:*
Revision:
Date: 12/20/2014
Time: 7:39:17 AM
Sheet* of *
File: D:\WORK PLACE\Altium\PCB PROJECT\STM32F429_18Bit\MCU.SchDoc
Altium

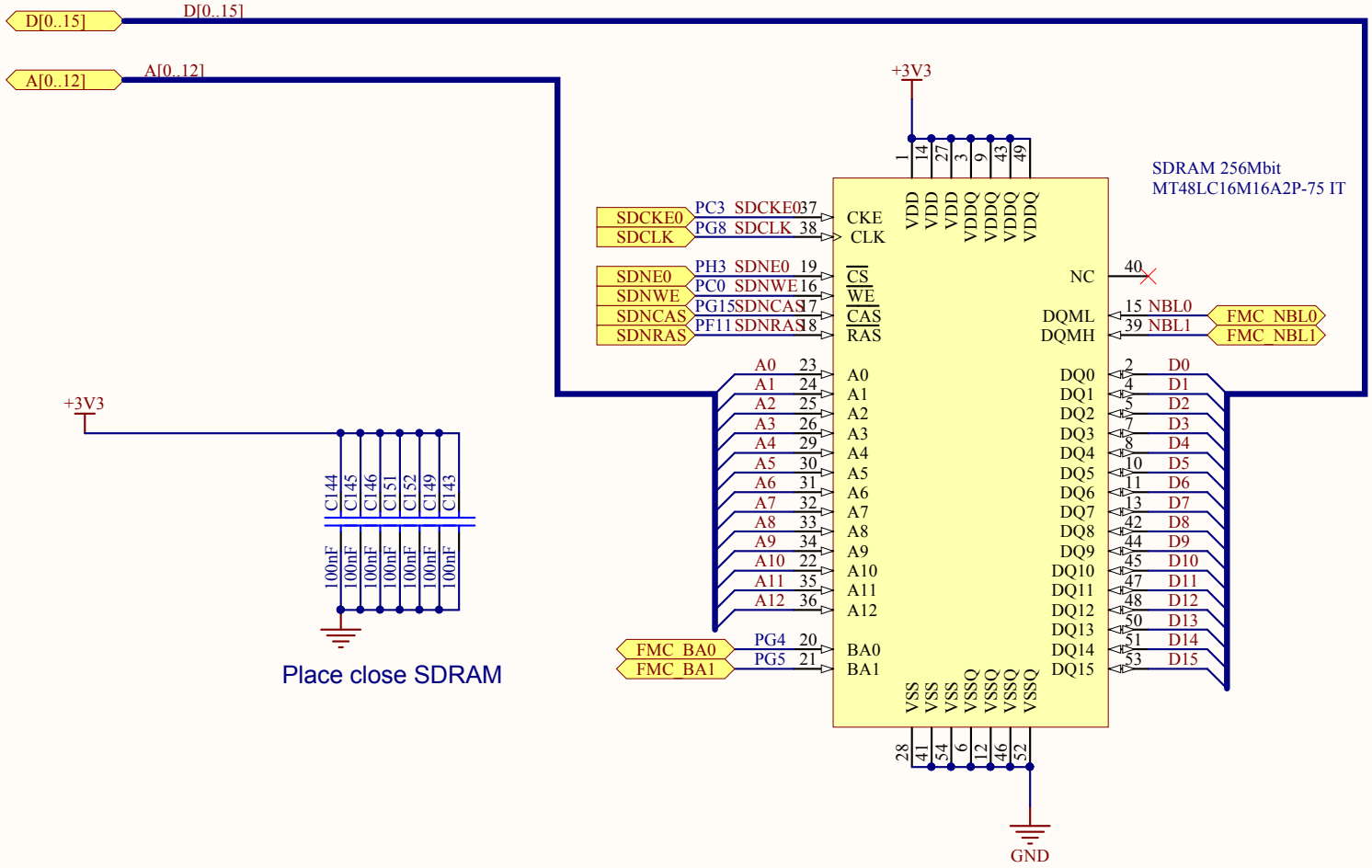

Title *			*
Size: A	Number:*	Revision:*	*
Date: 12/20/2014	Time: 7:39:17 AM	Sheet * of *	*
File: D:\WORK PLACE\Altium\PCB PROJECT\STM32F429_18Bit\Memory.SchDoc			

Altium

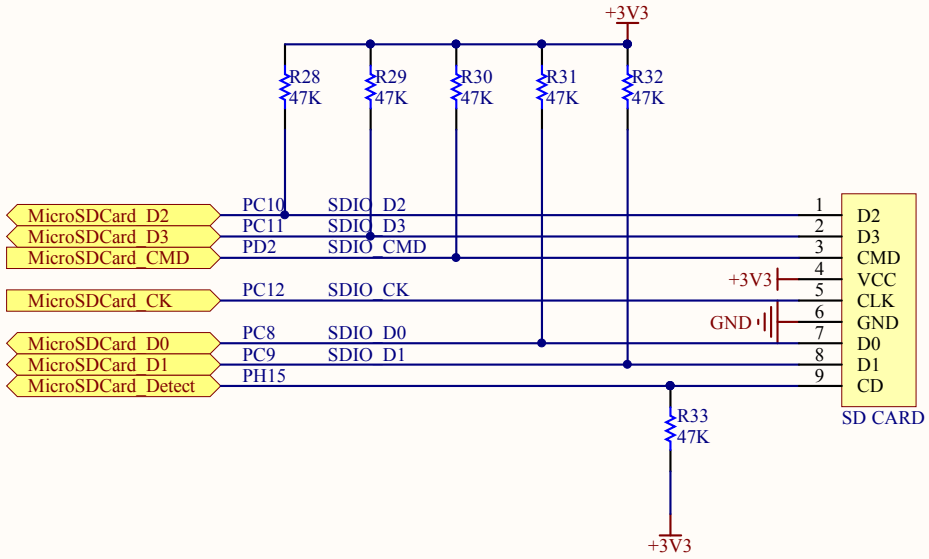

Title *			* * * * *
Size: A	Number:*	Revision:	
Date: 12/20/2014	Time: 7:39:17 AM	Sheet * of *	
File: D:\WORK PLACE\Altium\PCB PROJECT\STM32F429_18Bit\MicroSDCard.SchDoc			MB786

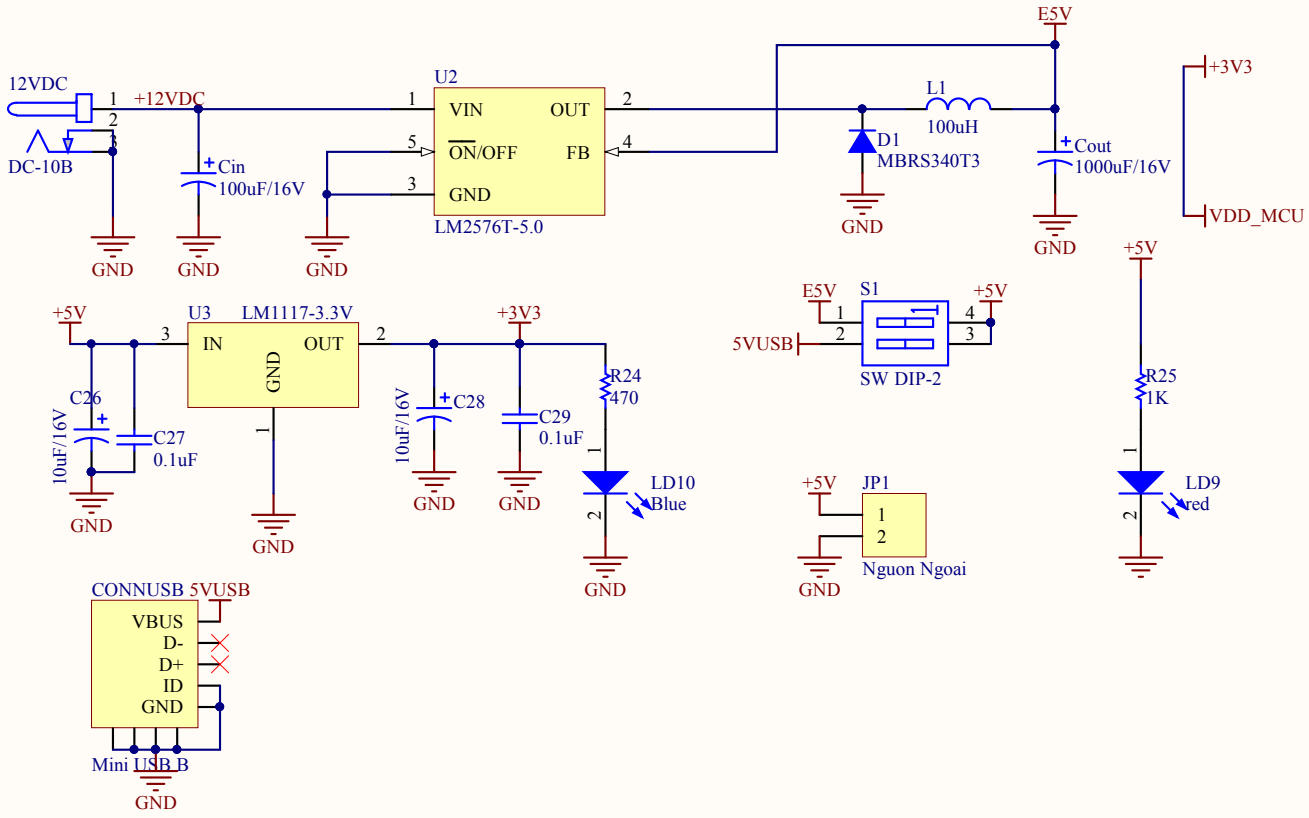

Title *			*
Size: A	Number:*	Revision:	*
Date: 12/20/2014	Time: 7:39:18 AM	Sheet * of *	*
File: D:\WORK PLACE\Altium\PCB PROJECT\STM32F429_18Bit\power.SchDoc			

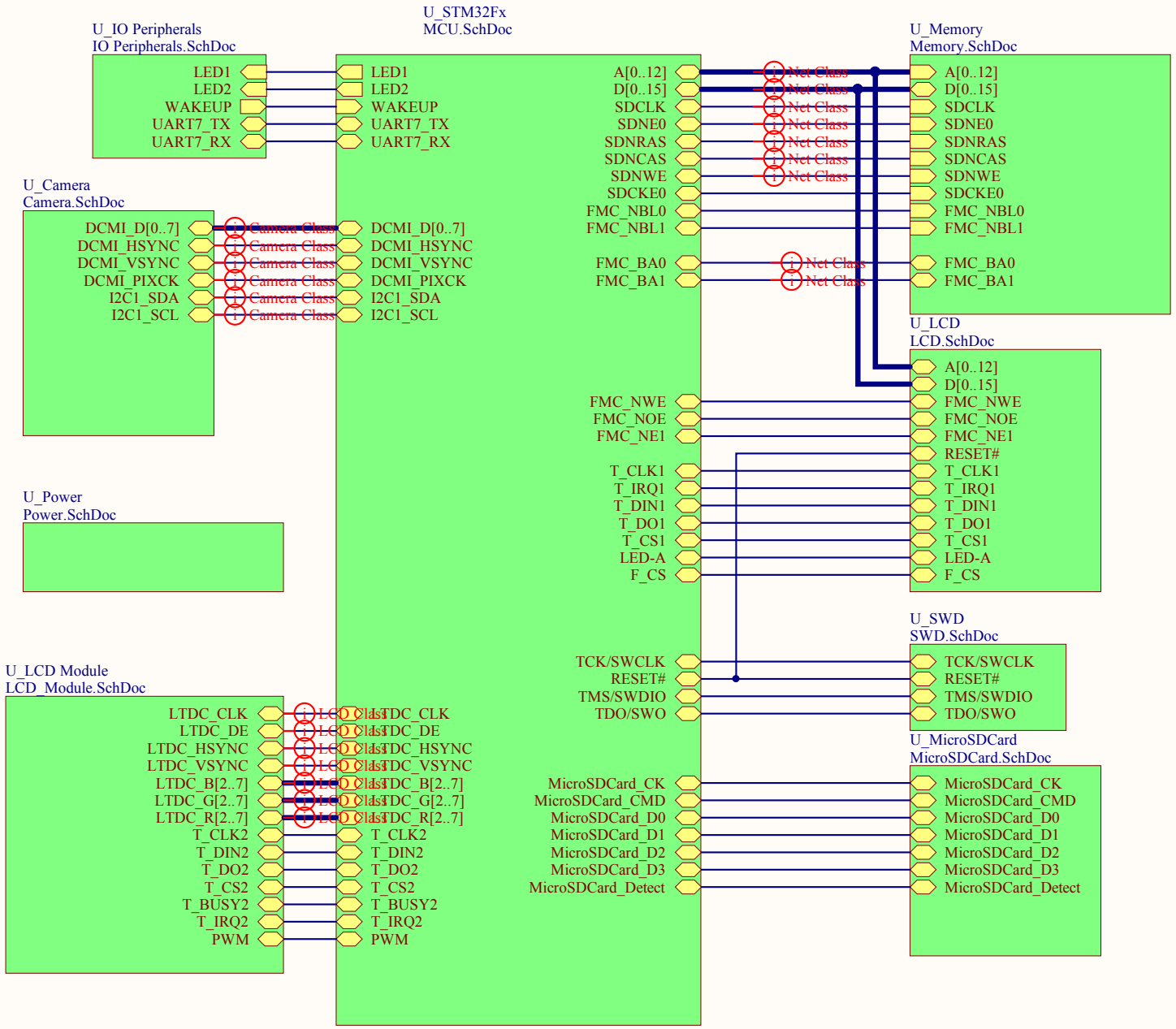

Title *			*
Size: A	Number:*	Revision:*	*
Date: 12/20/2014	Time: 7:39:18 AM	Sheet * of *	*
File: D:\WORK PLACE\Altium\PCB PROJECT\STM32F429_18Bit\STM32F4.SchDoc			

Altium

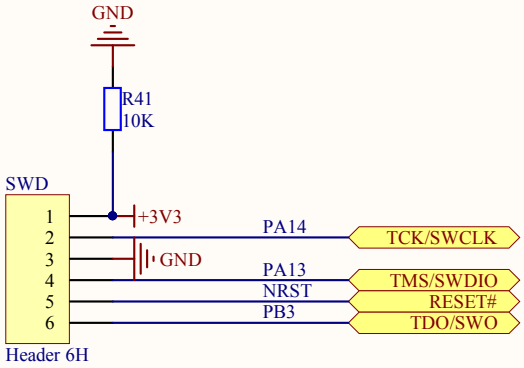

Title *			* * * * *
Size: A	Number:*	Revision:*	
Date: 12/20/2014	Time: 7:39:18 AM	Sheet * of *	
File: D:\WORK PLACE\Altium\PCB PROJECT\STM32F429_18Bit\SWD.SchDoc			

Altium

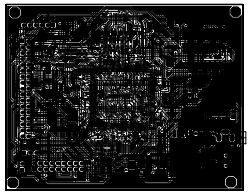

Board S