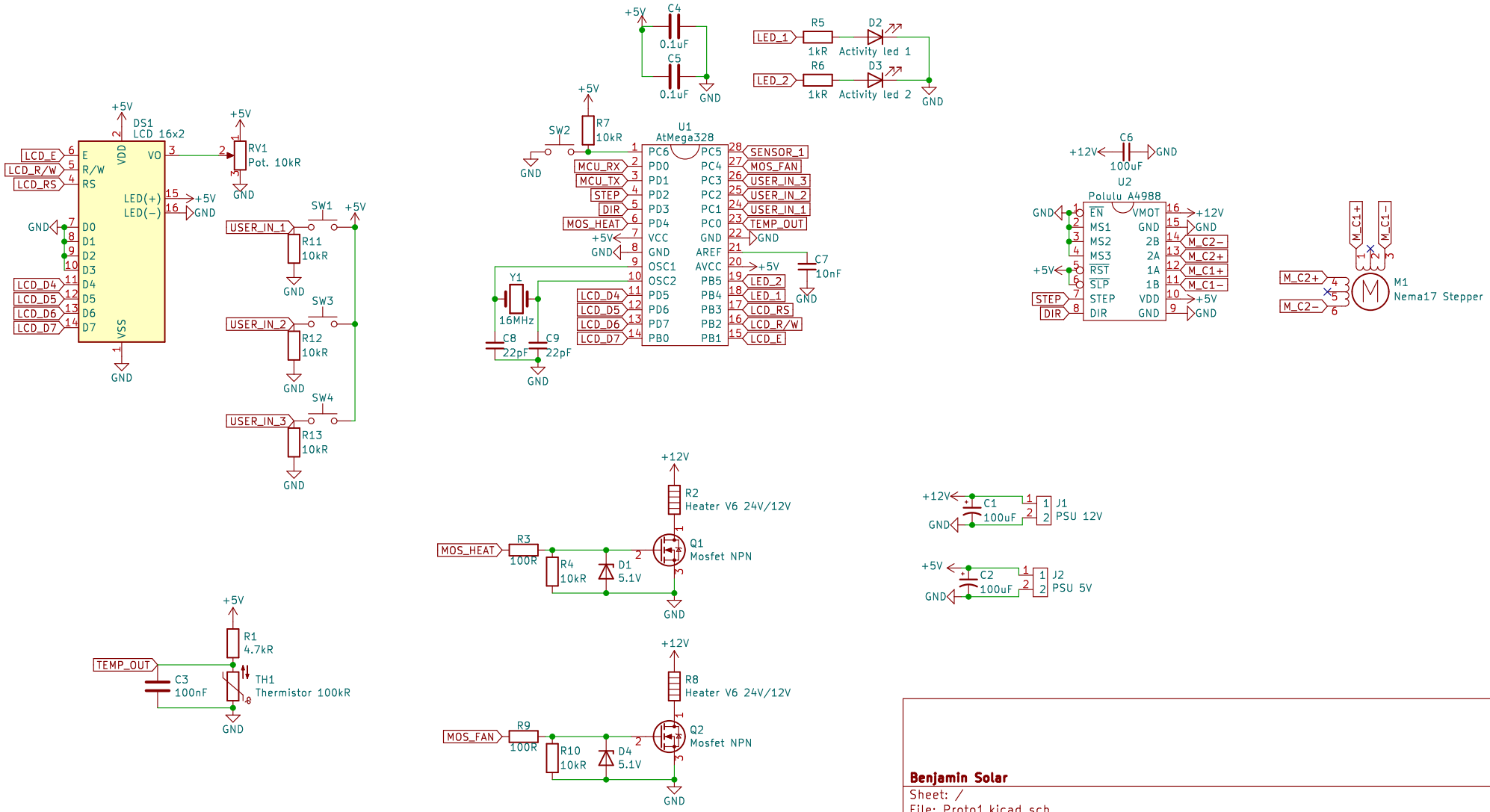

Benjamin Solar

Sheet: /

File: Proto1.kicad_sch

Title: Filament recycling controller

Size: A4	Date: 2022-10-09	**Rev: 1**
KiCad E.D.A. kicad (6.0.8)		Id: 1/1