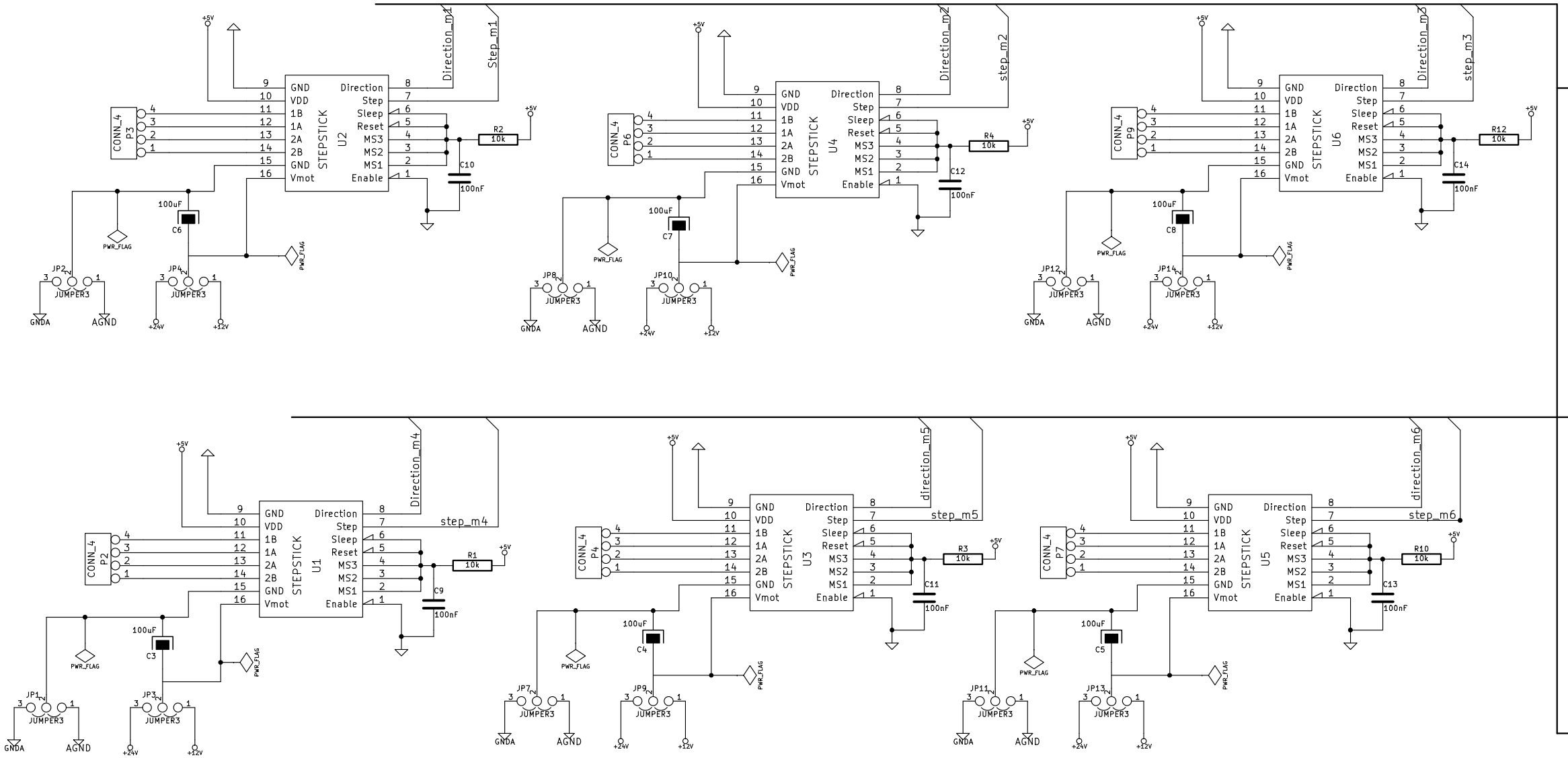

Drivers motor

Beaglebone I/F

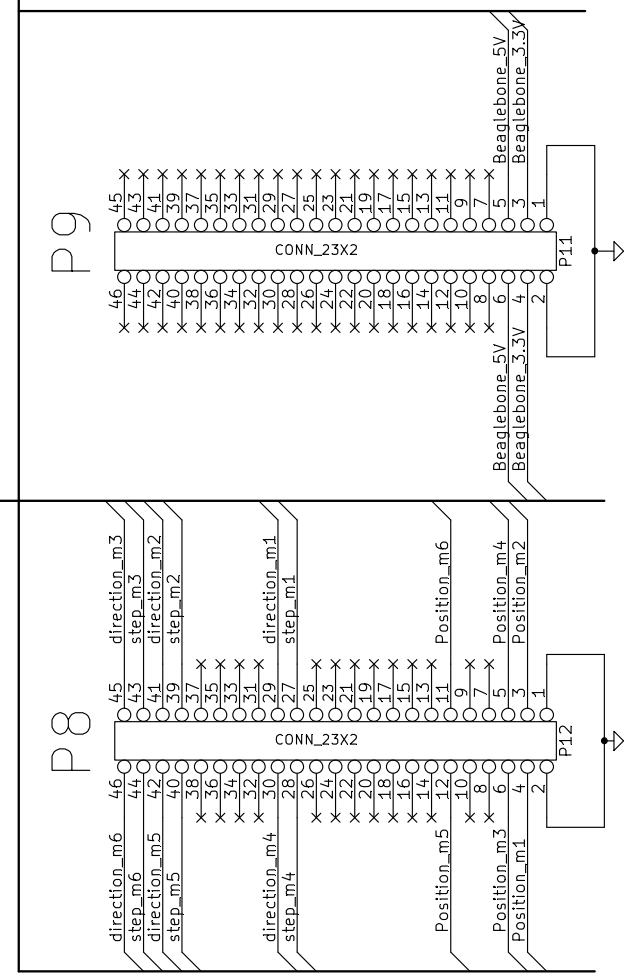

Detection part

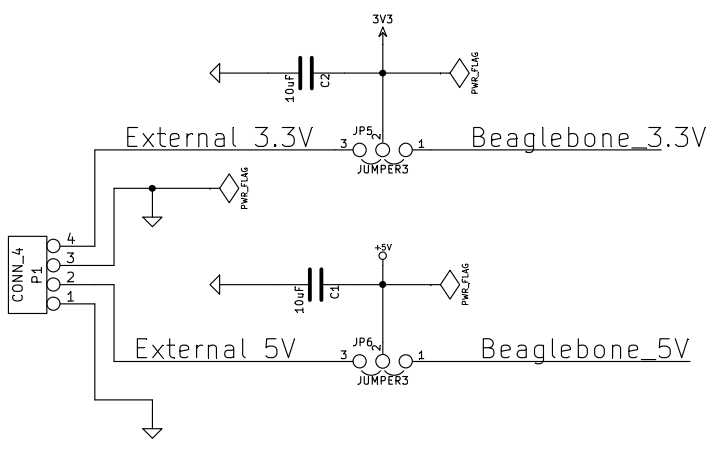

External supply

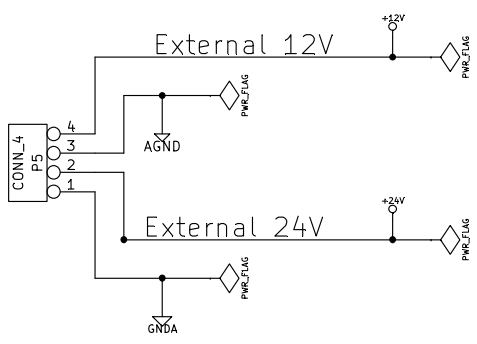

Nota : Tracks need to support 12A

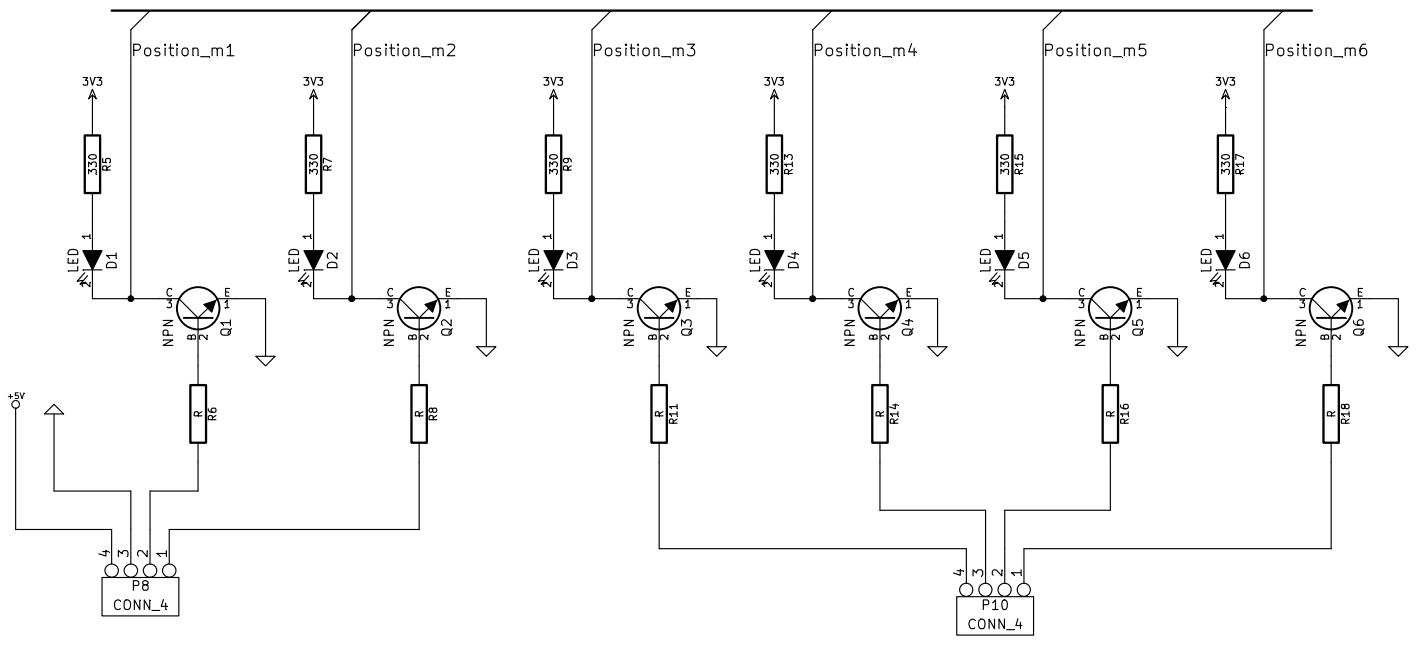

Fablab Lannion		
File: Illustrabot2_IF_Motor_Beagle_v1.sch		
Sheet: /		
Title: Carte Interface Beaglebone / Bras robotisé		
Size: A3	Date: 3 feb 2014	**Rev: 1.0**
KiCad E.D.A. eeschema (2013-07-07 BZR 4022)-stable		Id: 1/1