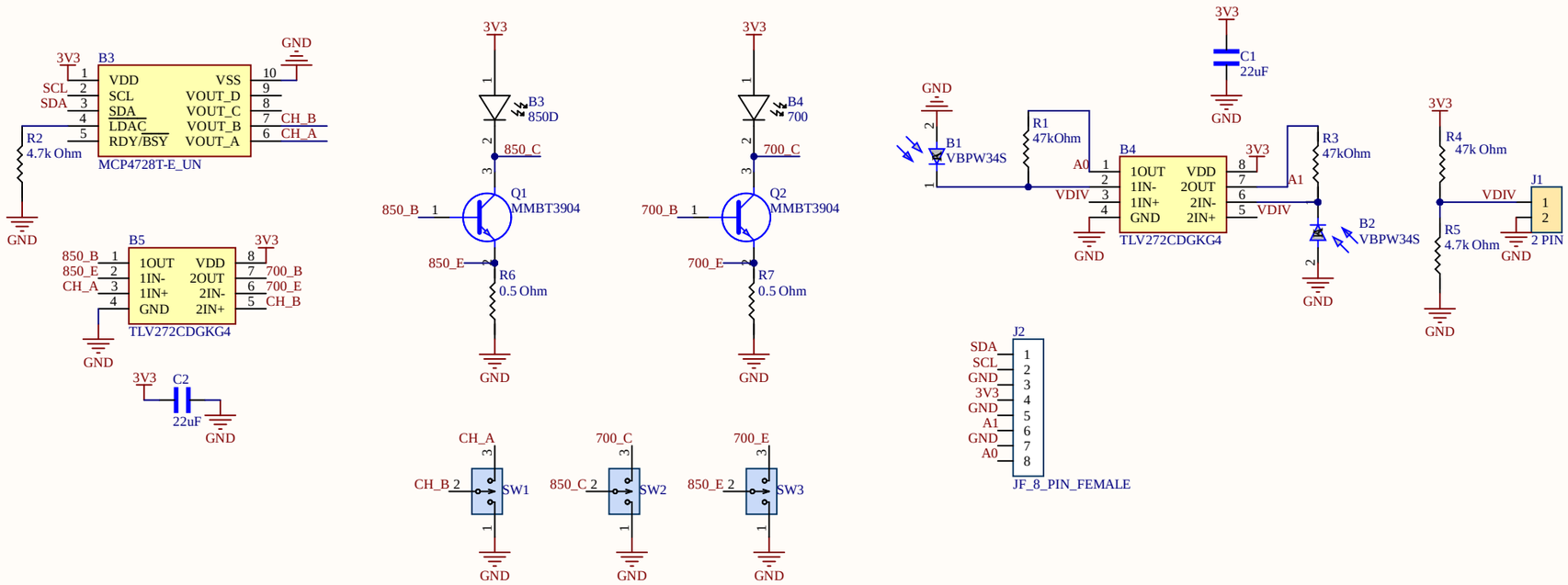

Title		
Size A3	Number	Revision
Date: 5/31/2025		Sheet of
File: OpenHEG.SchDoc		Drawn By: