# UnMix-NeRF: Spectral Unmixing Meets Neural Radiance Fields

Fabian Perez, Sara Rojas, Carlos Hinojosa, Hoover Rueda-Chacón, Bernard Ghanem

Universidad Industrial de Santander
King Abdullah University of Science and Technology

ICCV OCT 19-23, 2025 HONOLULU HAWAII

## Introduction

Current methods are either limited to RGB or rely on simple per-wavelength regression to reconstruct spectra.

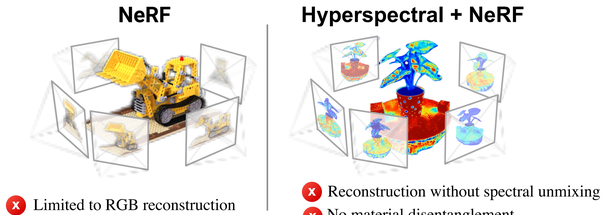


## Overview

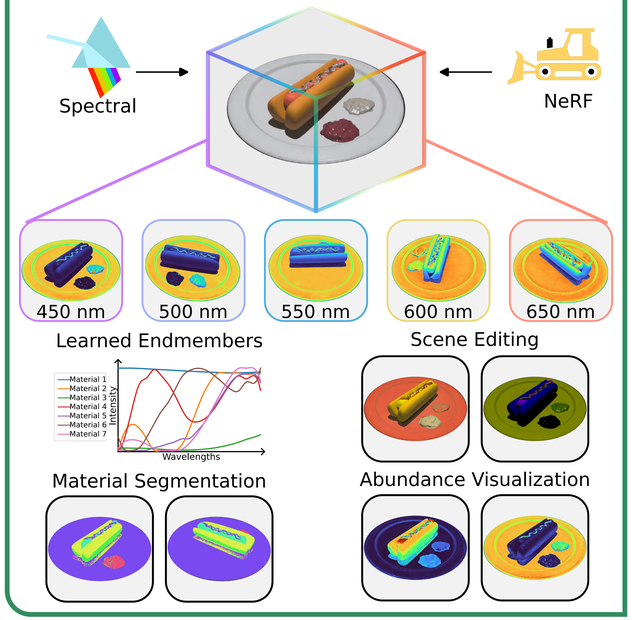


## Proposed framework

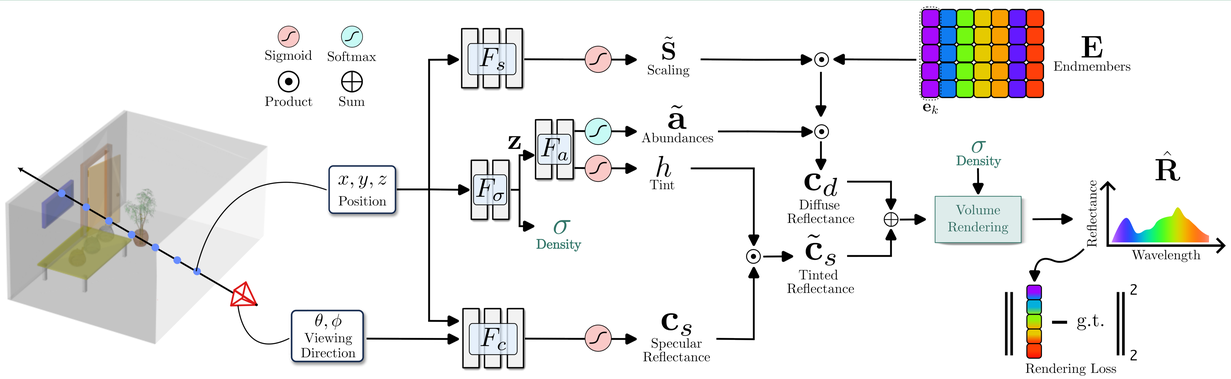


**Overview of Unmixing NeRF.** Given view $(\theta, \phi)$ and point $(x, y, z)$, the network predicts density $\sigma$, abundances $\tilde{\mathbf{a}}$, and scalars $\tilde{\mathbf{s}}$ to scale spectral endmembers $\mathbf{E}$; their product yields the diffuse reflectance $\mathbf{c}_d$. In parallel, it predicts a specular component $\mathbf{c}_s$ and a tint $h$ for local illumination. The final spectral radiance is volume-rendered from $\sigma$ using $\mathbf{c}_d + \tilde{\mathbf{c}}_s$.

## Qualitative Results

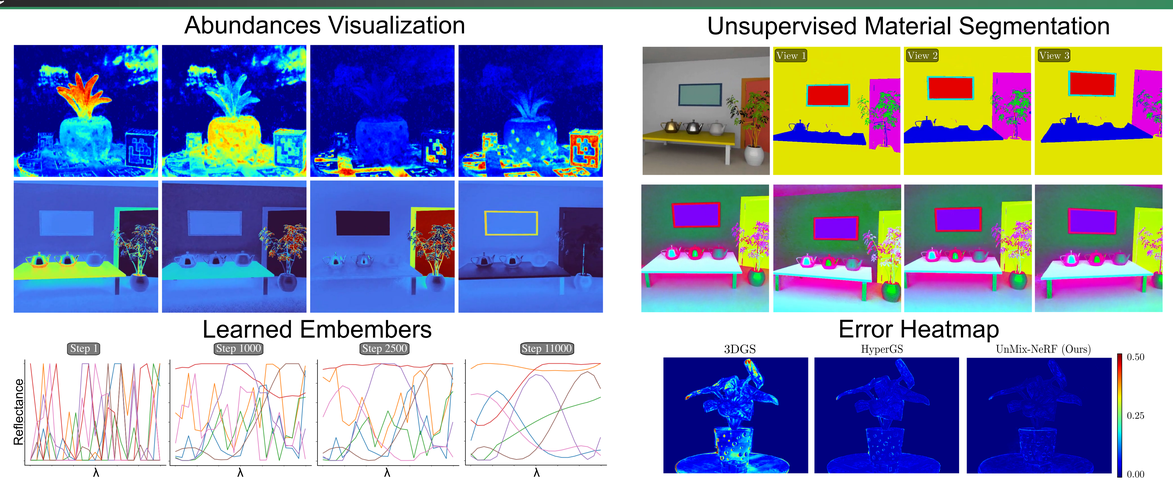


## Ablations

**Impact of each component:** Increasing gains and more stable training with all modules.

| Ablation Step | PSNR ↑ | SSIM ↑ | SAM ↓ | RMSE ↓ |
|---|---|---|---|---|
| Base: Unmix Only | 24.73 | 0.710 | 0.063 | 0.058 |
| + Physical Constraint | 22.36 | 0.722 | 0.075 | 0.076 |
| + Scaling Factors | 29.36 | 0.914 | 0.026 | 0.034 |
| + RGB Loss | 30.92 | 0.923 | 0.025 | 0.028 |
| + VCA Initialization | 31.09 | 0.923 | 0.024 | 0.027 |
| + Specular Field | **33.20** | **0.935** | **0.022** | **0.023** |

**Number of endmembers:** Affects performance.

## Quantitative Results

We compare against SotA methods on three benchmarks: BaySpec, Surface Optics, and NeSpoF.

| Method | Scene | PSNR ↑ | RMSE ↓ | Time |
|---|---|---|---|---|
| HS-NeRF* | avg. | 26.0 | 0.04 | 5 hours |
| NeSpoF | avg. | 33.0 | 0.02 | 11.9 hours |
| Ours | ajar | 38.09 | 0.01 | 43 min |
| | hotdog | 34.47 | 0.01 | 45 min |
| | cbox-dragon | 32.21 | 0.02 | 45 min |
| | cbox-sphere | 27.96 | 0.03 | 44 min |
| | avg. | **33.2** | **0.02** | **44 min** |

Bayspec Dataset

| Method | Pinecone | | | | Caladium | | | |
|---|---|---|---|---|---|---|---|---|
| | PSNR ↑ | SSIM↑ | SAM↓ | RMSE↓ | PSNR ↑ | SSIM↑ | SAM↓ | RMSE↓ |
| NeRF | 22.82 | 0.6113 | 0.0446 | 0.0728 | 23.12 | 0.58348 | 0.0491 | 0.0709 |
| MipNeRF | 21.45 | 0.5738 | 0.0410 | 0.0856 | 23.36 | 0.5935 | 0.0487 | 0.0685 |
| TensoRF | 24.12 | 0.6454 | 0.0593 | 0.0625 | 24.79 | 0.6424 | 0.0516 | 0.0577 |
| Nerfacto | 15.36 | 0.4935 | 0.0707 | 0.1709 | 20.67 | 0.6208 | 0.0529 | 0.0945 |
| MipNeRF360 | 20.93 | 0.7355 | 0.0279 | 0.0507 | 26.93 | 0.7371 | 0.0332 | 0.0461 |
| HS-NeRF | 20.07 | 0.581 | 0.0725 | 0.1521 | 19.084 | 0.705 | 0.0533 | 0.0902 |
| 3DGS | 22.65 | 0.6039 | 0.0668 | 0.0819 | 23.50 | 0.7131 | 0.2889 | 0.0758 |
| HyperGS | *27.0* | *0.7509* | *0.0309* | *0.0447* | *27.70* | *0.8354* | *0.0271* | *0.0414* |
| Ours | **27.13** | **0.8174** | **0.0287** | **0.0429** | **30.08** | **0.8541** | **0.0237** | **0.0312** |