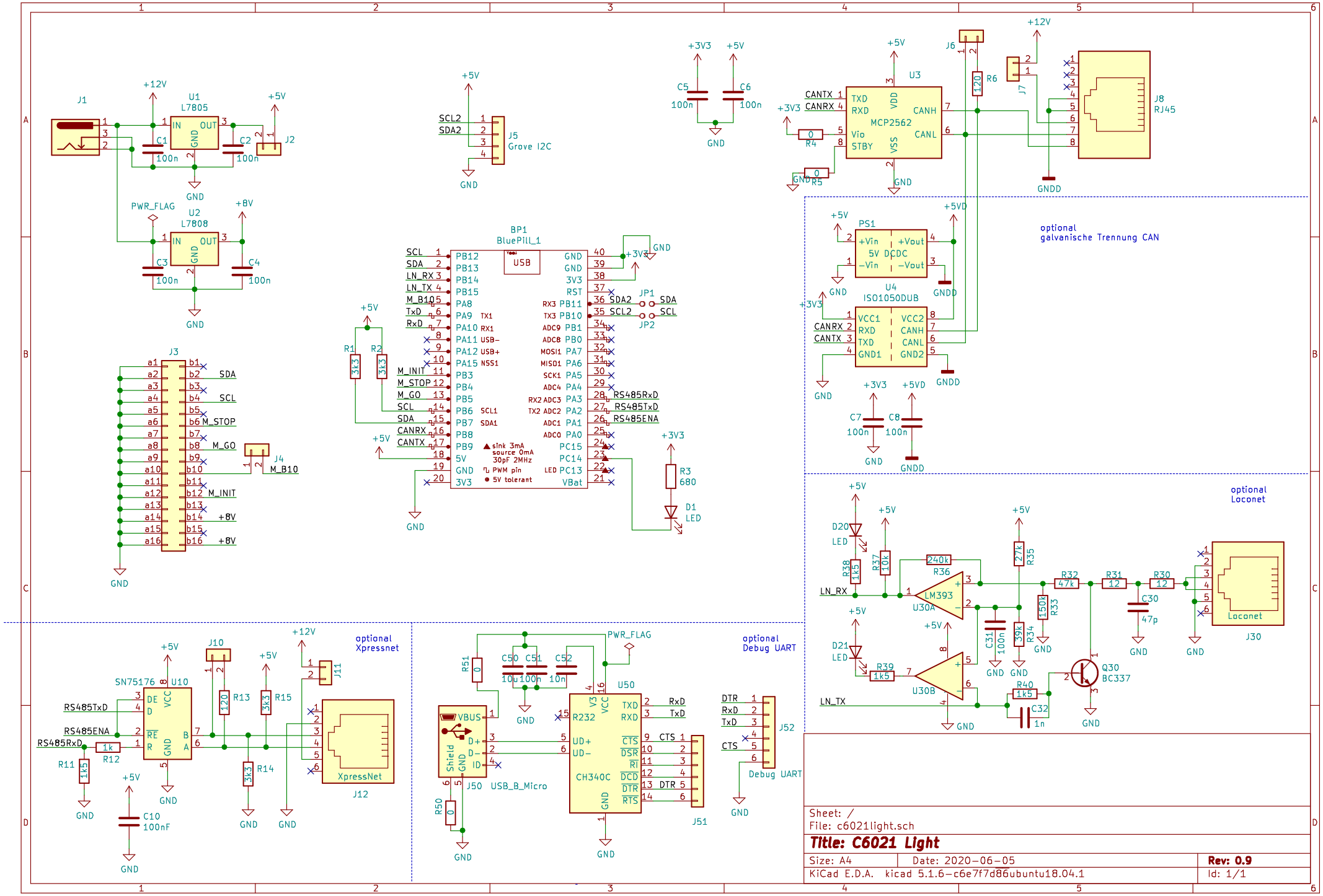

Sheet: /
File: c6021light.sch

Title: C6021 Light

Size: A4	Date: 2020-06-05	Rev: 0.9
KiCad E.D.A. kicad 5.1.6-c6e7f7d86ubuntu18.04.1		Id: 1/1