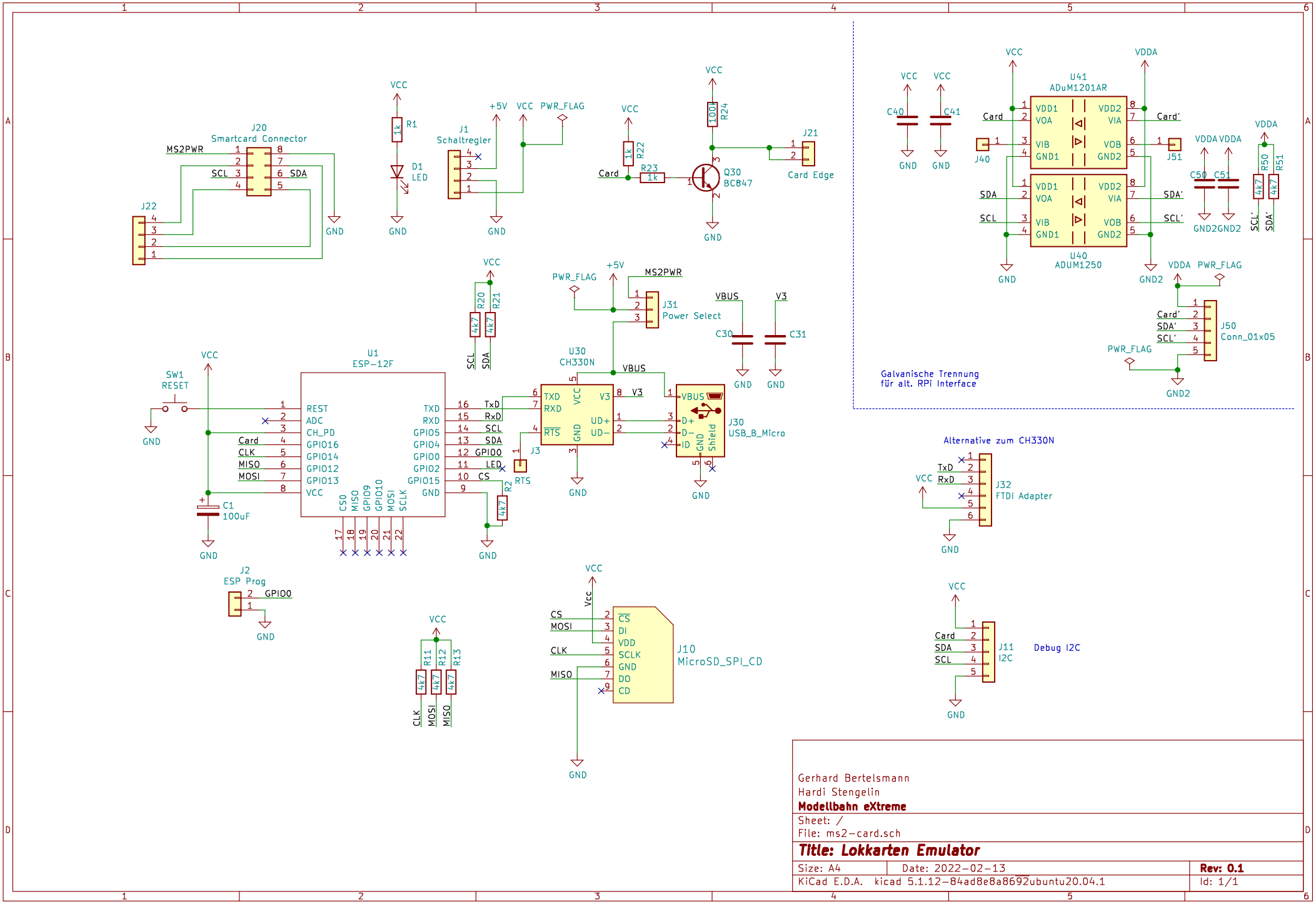

Gerhard Bertelsmann
Hardi Stengelin
Modellbahn eXtreme

Sheet: /
File: ms2-card.sch

Title: Lokkarten Emulator

Size: A4	Date: 2022-02-13	**Rev: 0.1**
KiCad E.D.A. kicad 5.1.12-84ad8e8a8692ubuntu20.04.1		Id: 1/1