Welcome to the Physics class

Principles of Physics II

Lecture 19

If there are N of turns in the coil (N number of loops) then:

$$\mathscr{E} = -N\frac{d\Phi_B}{dt} \qquad \text{(coil of } N \text{ turns).}$$

30-4 Lenz's Law

Soon after Faraday proposed his law of induction, Heinrich Friedrich Lenz devised a rule for determining the direction of an induced current in a loop:

> An induced current has a direction such that the magnetic field due to *the current* opposes the change in the magnetic flux that induces the current.

The nature of the induced emf is to oppose the very cause to which it is due.

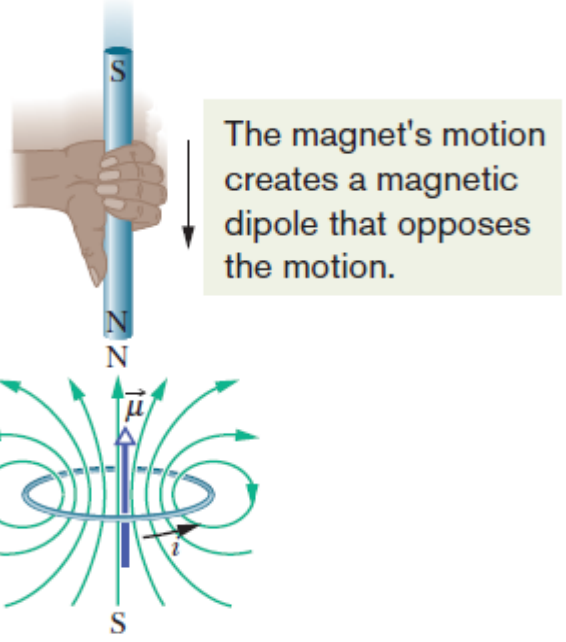

Fig. 30-4 Lenz's law at work. As the magnet is moved toward the loop, a current is induced in the loop. The current produces its own magnetic field, with magnetic dipole moment $\vec{\mu}$ oriented so as to oppose the motion of the magnet. Thus, the induced current must be counterclockwise as shown.

Explain Lenz's law! ① Opposition to pole movement.

Also for any circuit

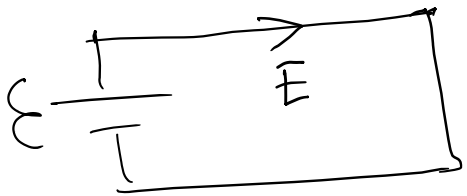

$$\mathcal{E} = -\oint \vec{E} \cdot d\vec{s}$$

$$\mathcal{E} = -\frac{d\phi_B}{dt} \quad \text{(Faraday's law)}$$

So for any conducting loop where an emf $\mathcal{E}$ is induced due to the change of magnetic flux through the coil, the Faradays law can also be written as

$$\oint \vec{E} \cdot d\vec{s} = -\frac{d\phi_B}{dt}$$

This is Maxwell's 3rd equation of electromagnetism

remember $\vec{E}$ is electric field across the conducting loop. $\mathcal{E}$ is the induced emf.

Figure 30-6 shows a conducting loop consisting of a half-circle of radius $r = 0.20$ m and three straight sections. The half-circle lies in a uniform magnetic field $\vec{B}$ that is directed out of the page; the field magnitude is given by $B = 4.0t^2 + 2.0t + 3.0$, with B in teslas and t in seconds. An ideal battery with emf $\mathscr{E}_{bat} = 2.0$ V is connected to the loop. The resistance of the loop is 2.0 Ω.

(a) What are the magnitude and direction of the emf $\mathscr{E}_{ind}$ induced around the loop by field $\vec{B}$ at $t = 10$ s?

(b) What is the current in the loop at $t = 10$ s?

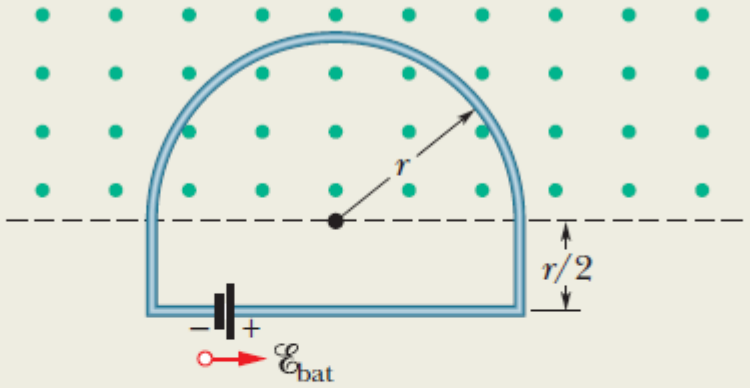

Figure 30-6 A battery is connected to a conducting loop that includes a half-circle of radius r lying in a uniform magnetic field. The field is directed out of the page; its magnitude is changing.

(a) $\vec{B}$ is $\perp r$ and uniform to the plane of the semicircular loop. So

$$\phi_B = \int \vec{B}\cdot d\vec{A} = \int B\,dA = B\int dA = BA.$$

From Faraday's law

$$|\mathscr{E}_{ind}| = \frac{d\phi_B}{dt} = \frac{d}{dt}(BA)$$

$$= A\frac{dB}{dt}$$ (next slide)

$A = \frac{1}{2}\pi r^2$ (half circle)

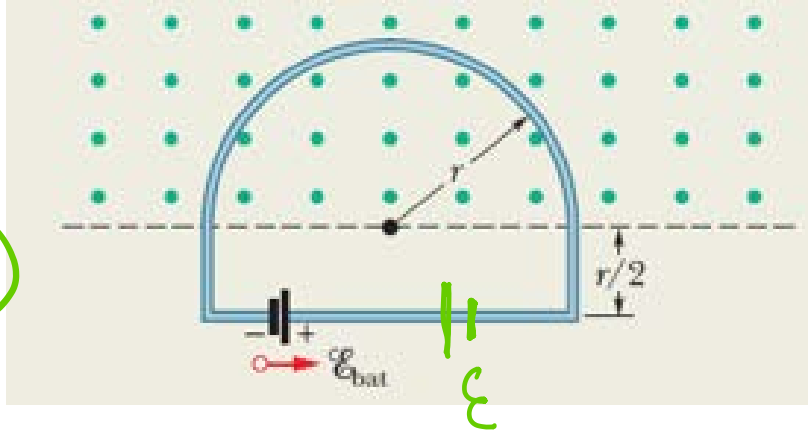

$$\mathcal{E}_{ind} = A\frac{dB}{dt} = \frac{\pi r^2}{2}\frac{d}{dt}\left(4t^2+2.t+3\right)$$

$$= \frac{\pi r^2}{2}\left(8t+2\right)$$

at $t = 10\,s$.

$$\mathcal{E}_{ind} = \frac{\pi(0.2)^2}{2}\left[8.(10)+2\right]$$

$$= 5.152\ V = 5.2\ V$$

$\bar{B}$ is increasing with time. The nature of the induced current will be to oppose the increasing B. So the direction of the induced emf will be to produce a current in cw direction

(6) The induced emf $\mathcal{E}_{ind}$ tends to drive a current clockwise around the loop. The current at

$t = 10$ sec:

$$i = \frac{\mathcal{E}_{net}}{R} = \frac{\mathcal{E}_{ind} - \mathcal{E}_{bat}}{R} = \frac{3.152 - 2}{2} = 1.58 \text{ A}$$

$$\simeq 1.6 \text{ A}$$

in the clockwise direction.

Figure 30-7 shows a rectangular loop of wire immersed in a nonuniform and varying magnetic field $\vec{B}$ that is perpendicular to and directed into the page. The field's magnitude is given by $B = 4t^2x^2$, with B in teslas, t in seconds, and x in meters. (Note that the function depends on *both* time and position.) The loop has width $W = 3.0$ m and height $H = 2.0$ m. What are the magnitude and direction of the induced emf $\mathscr{E}$ around the loop at $t = 0.10$ s?

If the field varies with position, we must integrate to get the flux through the loop.

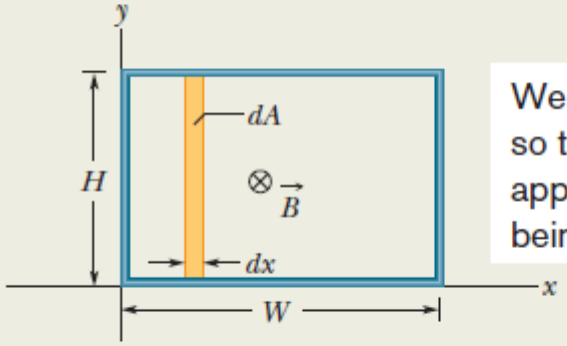

We start with a strip so thin that we can approximate the field as being uniform within it.

Figure 30-7 A closed conducting loop, of width W and height H, lies in a nonuniform, varying magnetic field that points directly into the page. To apply Faraday's law, we use the vertical strip of height H, width dx, and area dA.

$\vec{B}$ is $\perp$ r to the plane of the loop.

$dA = H\,dx$ (see the yellow strip)

$$\phi_B = \int \vec{B}\cdot d\vec{A} = \int B\,dA$$

$$= \int B H\,dx = \int 4t^2x^2 H\,dx = 4t^2H\int_0^3 x^2\,dx$$

$$= 4t^2H\left[\frac{x^3}{3}\right]_0^3 = 4t^2\,2.\left[\frac{3^3}{3}\right] = 4t^2.2.9 = 72t^2$$

Using Faraday's Law.

$$\mathcal{E} = \frac{d\phi_B}{dt} = \frac{d(72t^2)}{dt} = 144t.$$

at $t = 0.10$ sec.

$$\mathcal{E} = 144 \times 0.1 = 14\,V.$$

B_{ind} will be directed <u>out of the page</u>

and i_{ind} is Counter Clockwise (CCW).

[$B = 4t^2x^2$ is increasing with time and directed into the page]

Inductors and Inductance

Inductance of a Solenoid

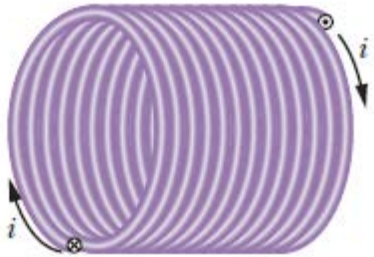

Fig. 29-16 A solenoid carrying current i.

Definition of inductance **L**

Self flux linkage with the solenoid $N\phi_B = NAB = NA\mu_0 n i$

$\therefore N\phi_B \propto i$

$N\phi_B = Li$

L is the proportionality constant and is called the Self inductance (coeff) of the Solenoid.

Unit of L: $T\,m^2/A$

$$L = \frac{N\Phi_B}{i} \quad \text{(inductance defined)},$$

henry.

$$1 \text{ henry} = 1 \text{ H} = 1 \text{ T} \cdot \text{m}^2/\text{A}.$$

Inductance of a Solenoid

L from the geometry of the solenoid

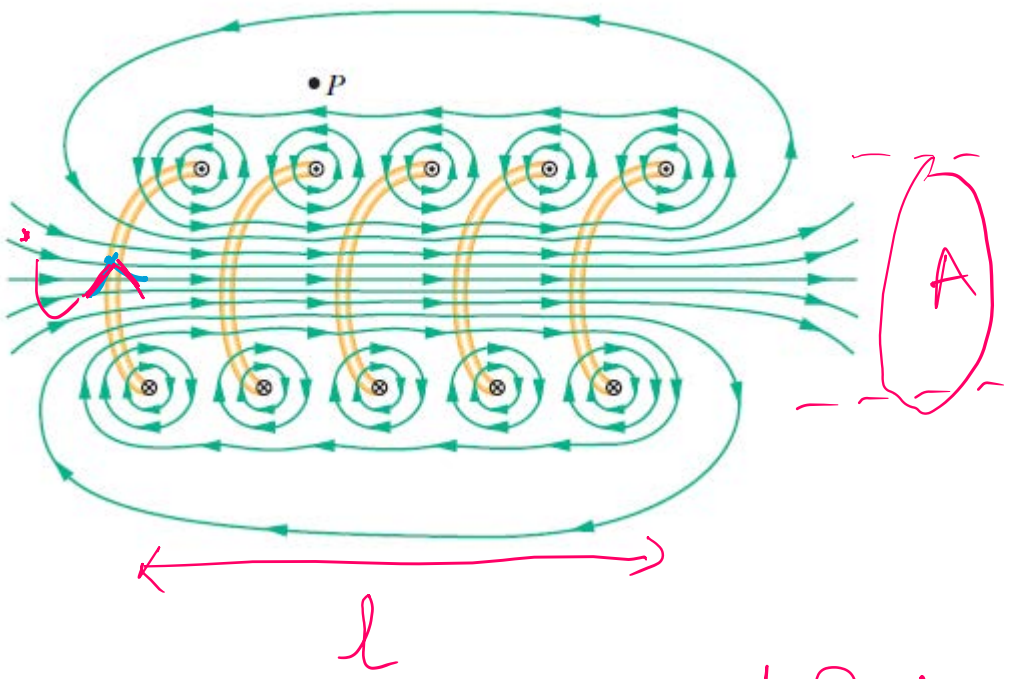

$N\phi_B = nl(BA)$

$n \rightarrow$ number of turns / m

B is the magnetic field produced due to the current i through each coil. and A is x-sectional area of each coil. l is the total length of the coil.

Now B for a solenoid:

$B = \mu_0 n i$

By definition $L = \frac{N\phi_B}{i}$

$$\therefore \quad L = \frac{(nl)\,BA}{i} = \frac{nl(\mu_0 n i)A}{i}$$

$$= \mu_0 n^2 l A$$

The inductance per unit length near the centre of a long solenoid

$$\frac{L}{l} = \mu_0 n^2 A \quad \text{henry (H)}$$

Self-Induction

self-induced emf.

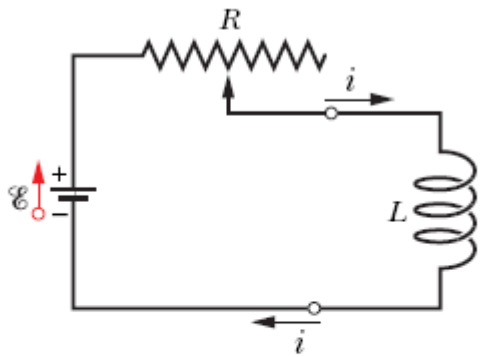

Fig. 30-13 If the current in a coil is changed by varying the contact position on a variable resistor, a self-induced emf $\mathscr{E}_L$ will appear in the coil *while the current is changing.*

The self induced emf oppose the change of current through the coil.

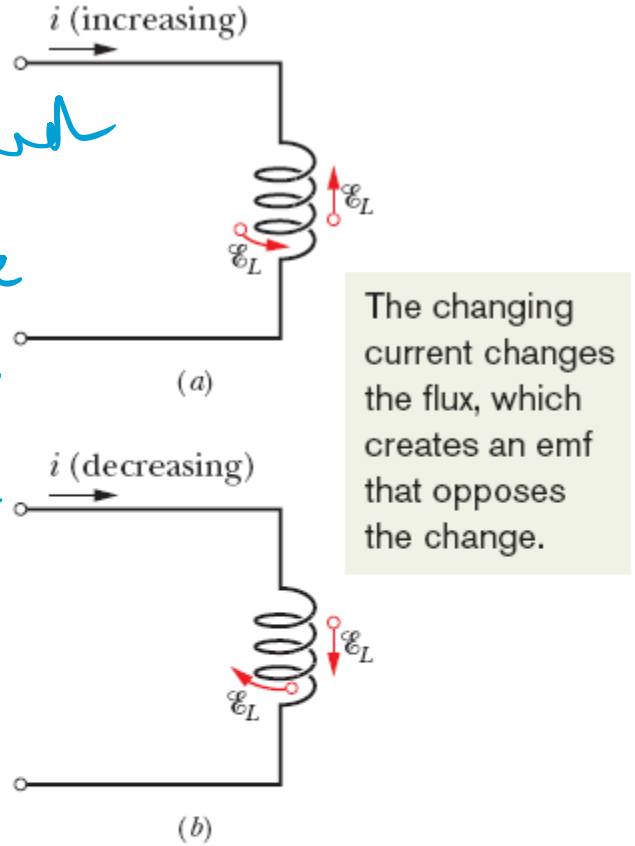

Fig. 30-14 (*a*) The current *i* is increasing, and the self-induced emf $\mathscr{E}_L$ appears along the coil in a direction such that it opposes the increase. The arrow representing $\mathscr{E}_L$ can be drawn along a turn of the coil or alongside the coil. Both are shown. (*b*) The current *i* is decreasing, and the self-induced emf appears in a direction such that it opposes the decrease.

For any inductor $N\phi_B = Li$ definition of inductance (self) of a coil.

From Faraday's law $\mathcal{E}_L = -\dfrac{d(N\phi_B)}{dt} = -\dfrac{d}{dt}(Li)$

$$\therefore \quad \mathcal{E}_L = -L\frac{di}{dt}$$

Thus in any inductor (such as a coil/solenoid/toroid) a self-induced emf will be produced whenever the current changes with time.

i is not important it is $\dfrac{di}{dt}$ that determines the magnitude of the self induced emf.

An induced emf $\mathcal{E}_L$ appears in any coil in which the current is changing.

RL CIRCUITS (in next class)

$$-iR - L\frac{di}{dt} + \mathcal{E} = 0$$

$$L\frac{di}{dt} + Ri = \mathcal{E}$$

$$i = \frac{\mathcal{E}}{R}\left(1 - e^{-\frac{R}{L}t}\right)$$

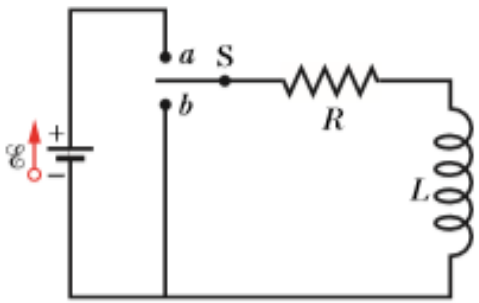

Fig. 30-15 An RL circuit. When switch S is closed on a, the current rises and approaches a limiting value $\mathcal{E}/R$.

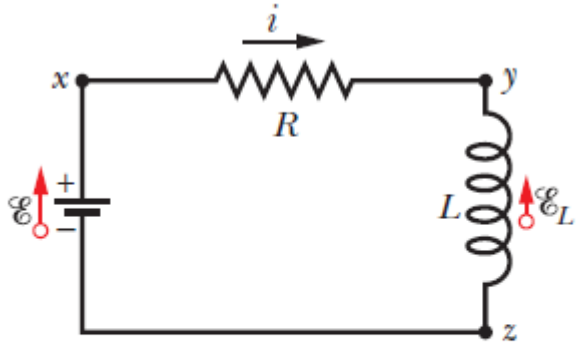

Figure 30-16 The circuit of Fig. 30-15 with the switch closed on a. We apply the loop rule for the circuit clockwise, starting at x.

$$\frac{L}{R} = \tau_L = \text{The inductive time constant.}$$

$$i = \frac{\mathcal{E}}{R}\left(1 - e^{-t/\tau_L}\right)$$

τ_L has the dimension of time.

RL CIRCUITS

$$-iR - L\frac{di}{dt} + \mathcal{E} = 0$$

$$L\frac{di}{dt} + Ri = \mathcal{E}$$

$$i = \frac{\mathcal{E}}{R}\left(1 - e^{-\frac{R}{L}t}\right)$$

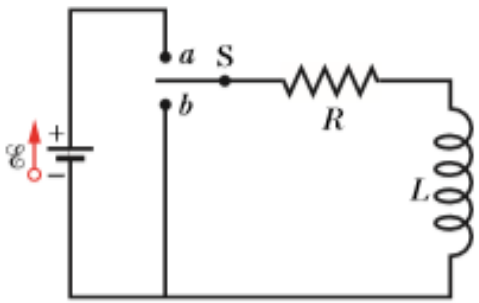

Fig. 30-15 An *RL* circuit. When switch S is closed on *a*, the current rises and approaches a limiting value $\mathcal{E}/R$.

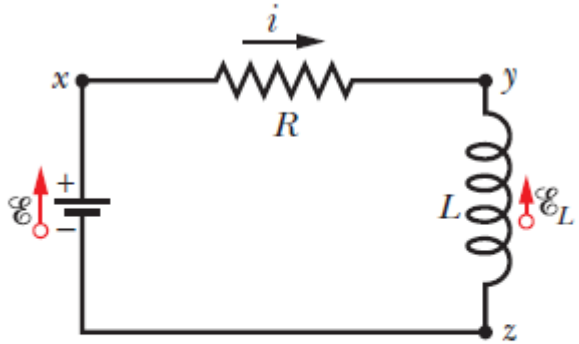

Figure 30-16 The circuit of Fig. 30-15 with the switch closed on *a*. We apply the loop rule for the circuit clockwise, starting at *x*.

$$\frac{L}{R} = \tau_L = \text{The inductive time constant.}$$

$$i = \frac{\mathcal{E}}{R}\left(1 - e^{-t/\tau_L}\right)$$

τ_L has the dimension of time.

For large t $\quad e^{-t/\tau_L} = \dfrac{1}{e^{t/\tau_L}} = 0$

$\therefore \quad i = \dfrac{\mathcal{E}}{R}(1-0) = \dfrac{\mathcal{E}}{R}$ The equillibrium current (max^m current in the ckt): The current is determined solely by the resistance in the circuit and the coil acts like a conducting wire.

At $t = \tau_L$ i.e. after one time constant.

$$i = \frac{\mathcal{E}}{R}\left(1 - e^{-\tau_L/\tau_L}\right) = \frac{\mathcal{E}}{R}\left(\underbrace{1-e^{-1}}_{\cdot 63}\right)$$

$$i = 0\cdot 63\,\frac{\mathcal{E}}{R}$$ i.e 63% of its final equillibrium value $\dfrac{\mathcal{E}}{R}$.

The resistor's potential difference turns on.
The inductor's potential difference turns off.

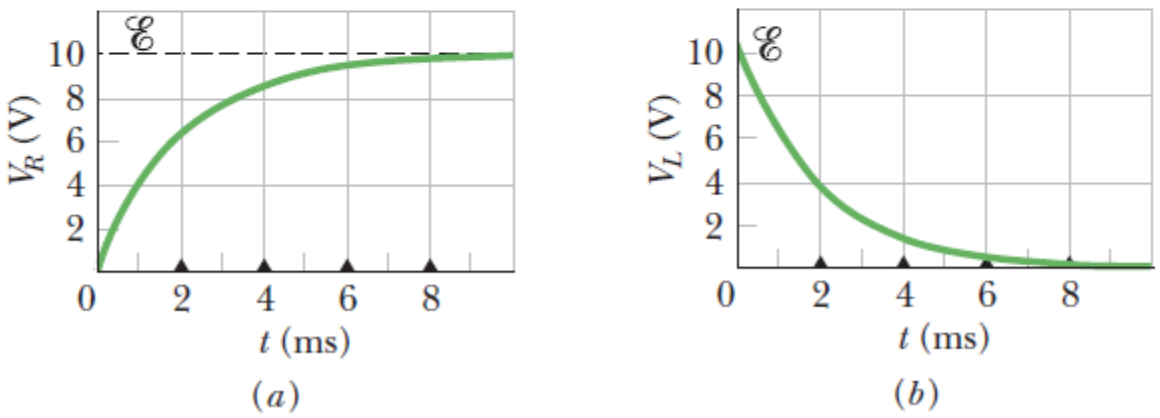

Figure 30-17 The variation with time of (*a*) V_R, the potential difference across the resistor in the circuit of Fig. 30-16, and (*b*) V_L, the potential difference across the inductor in that circuit. The small triangles represent successive intervals of one inductive time constant $\tau_L = L/R$. The figure is plotted for $R = 2000\ \Omega$, $L = 4.0$ H, and $\mathscr{E} = 10$ V.

Decay of current in LR circuit

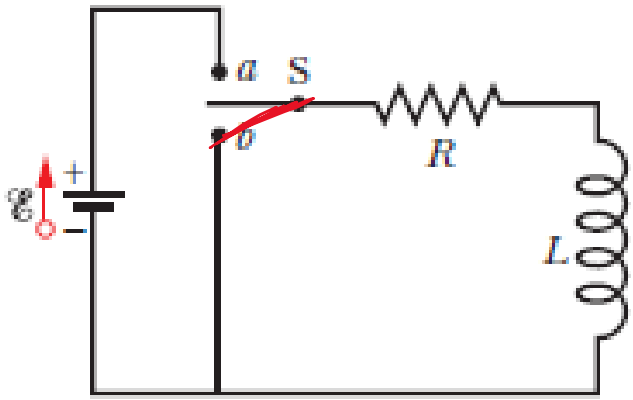

$$L\frac{di}{dt} + iR = 0.$$

$$i = \frac{\mathscr{E}}{R}e^{-t/\tau_L} = i_0 e^{-t/\tau_L} \quad \text{(decay of current).}$$

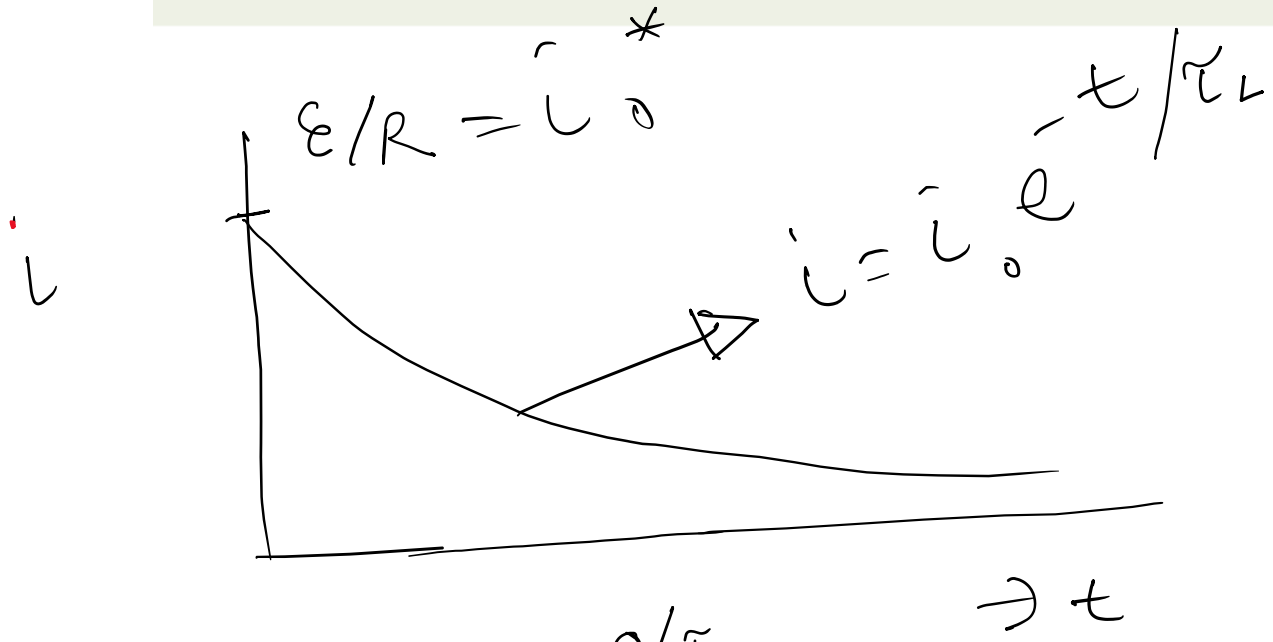

* at $t=0$ $\quad i = \frac{\mathscr{E}}{R} e^{-0/\tau_L}$

$$= \frac{\mathscr{E}}{R} = i_0$$

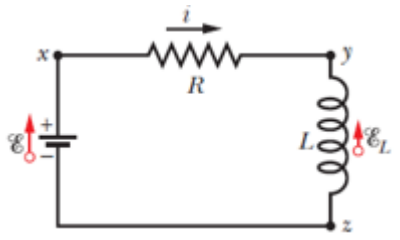

Energy Stored in a Magnetic Field

$$\mathcal{E} = L\frac{di}{dt} + iR,$$

The rate at which heat energy is dissipated in the resistance.

The rate at which work is done by the battery

$$\mathcal{E}i = Li\frac{di}{dt} + i^2R,$$

$\mathcal{E}i = \mathcal{E}\frac{dq}{dt} = \frac{dW}{dt}$ etc.

The rate at which magnetic potential energy U_B is stored in the magnetic field produced by the current in the coil.

Thus $$\frac{dU_B}{dt} = Li\frac{di}{dt}$$

$$\therefore \quad dU_B = Li\,di$$

$$dU_B = L i \, di$$

$$\therefore \int_0^{U_B} dU_B = \int_0^{i} L i \, di$$

$$U_E = \frac{1}{2} C V^2$$

$$U_B = \left| \frac{1}{2} L i^2 \right|_0^i$$

$$\sim \quad U_B = \frac{1}{2} L i^2$$

This is the magnetostatic potential energy stored in a magnetic field produced by a current i in an inductor of inductance L.