Welcome to the Physics class

Principles of Physics II

Lecture 15

CIRCUITS Work, Energy, and Emf

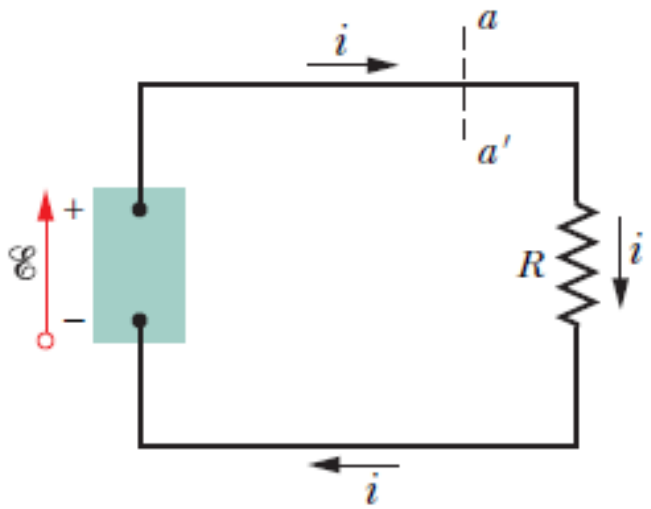

Fig. 27-1 A simple electric circuit, in which a device of emf $\mathscr{E}$ does work on the charge carriers and maintains a steady current i in a resistor of resistance R.

The cell drives dq charge through the circuit. Work done = dW.

$$\mathscr{E} = \frac{dW}{dq} \qquad \text{(definition of } \mathscr{E}\text{).}$$

The quantity $\frac{dW}{dq}$ is called the emf of the cell.

Unit $\mathscr{E}$ = $\frac{\text{Joules}}{\text{Coulomb}}$ = Volt

same as potential difference unit.

∴ The emf is the work done by the cell to drive one unit of charge through the external circuit.

Fig. 27-2 (*a*) In the circuit, $\mathscr{E}_B > \mathscr{E}_A$; so battery B determines the direction of the current. (*b*) The energy transfers in the circuit.

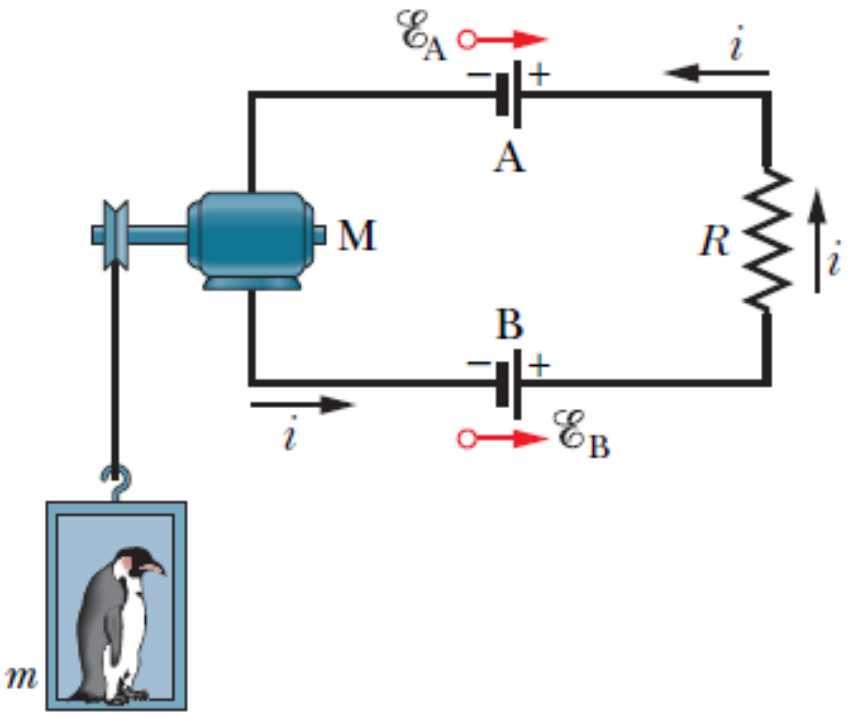

(*a*)

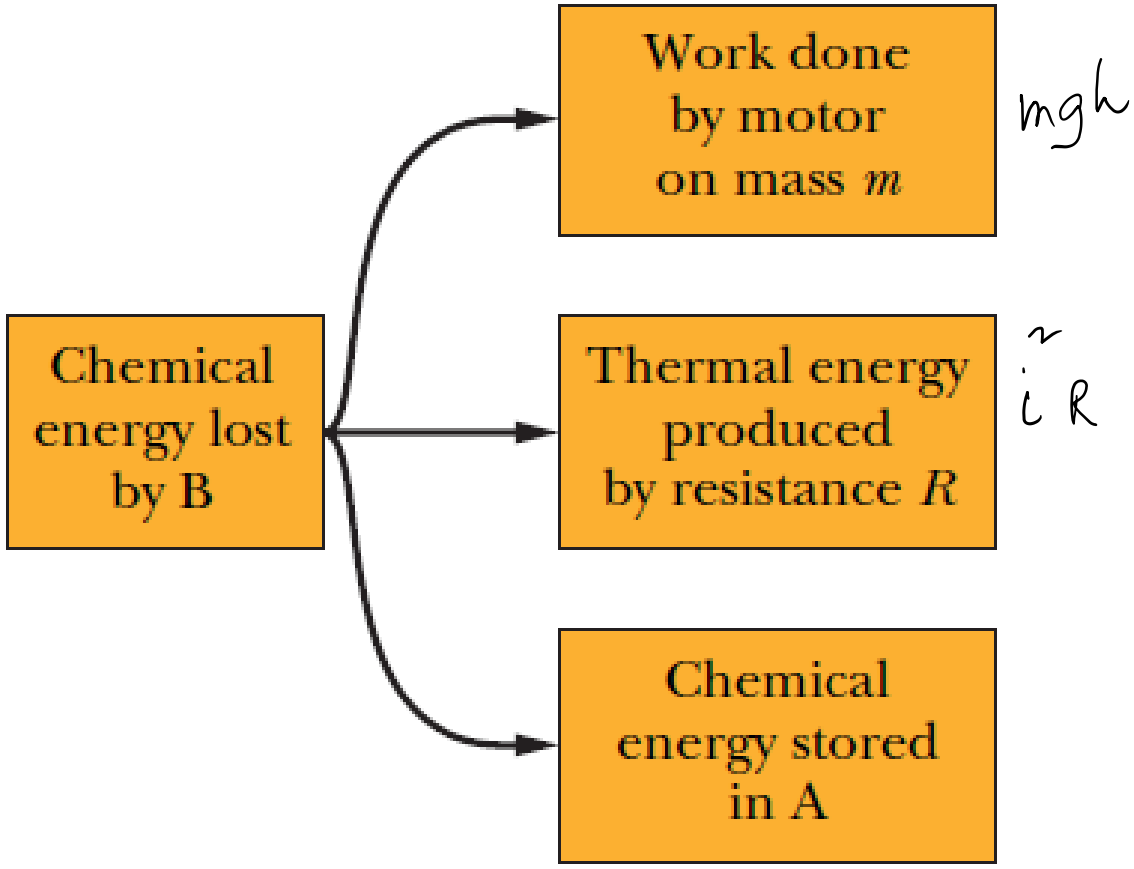

(*b*)

Calculating the Current in a Single-Loop Circuit

Loop rule

(Kirchhoff's loop rule / voltage rule).

$\sum \Delta V_i = 0$ around a loop.

$\Delta V = iR$

The battery drives current through the resistor, from high potential to low potential.

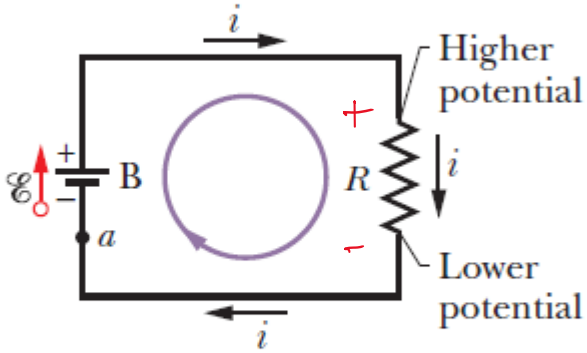

Fig. 27-3 A single-loop circuit in which a resistance R is connected across an ideal battery B with emf $\mathscr{E}$. The resulting current i is the same throughout the circuit.

① Polarity of Emf and V determine the sign.

② Current flows from higher to lower potential.

$\mathscr{E} - V = 0$

$\mathscr{E} - iR = 0$

$i = \mathscr{E}/R$

LOOP RULE: The algebraic sum of the changes in potential encountered in a complete traversal of any loop of a circuit must be zero.

Internal Resistance of a cell r

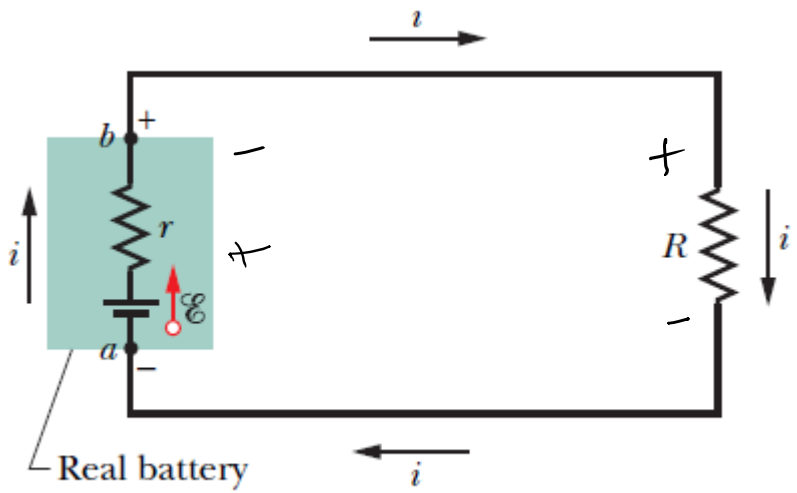

(a)

Apply Loop rule:

$$\mathcal{E} - ir - iR = 0$$

$$i(R+r) = \mathcal{E}$$

$$i = \frac{\mathcal{E}}{R+r}$$

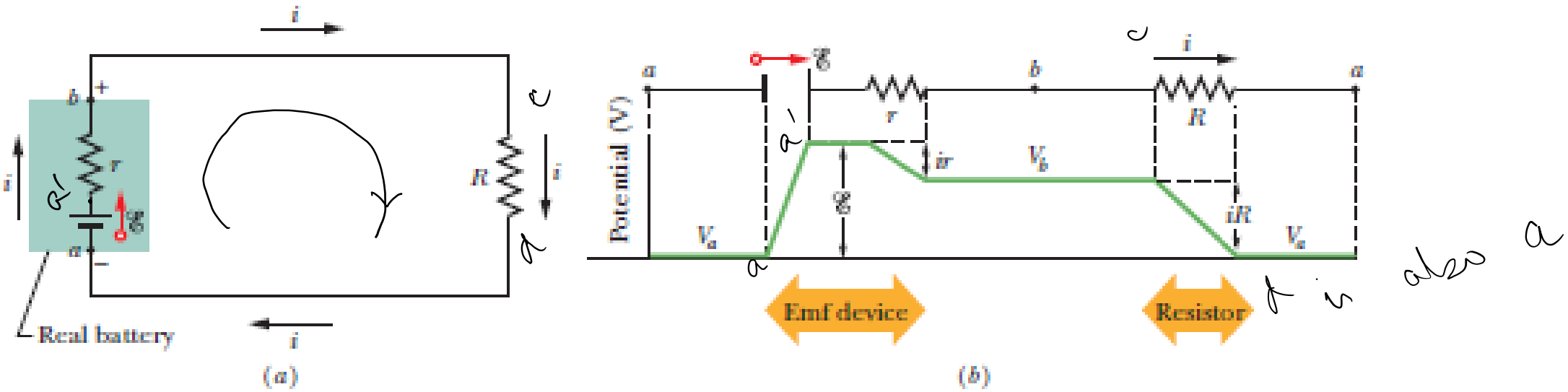

Figure 27-4 (*a*) A single-loop circuit containing a real battery having internal resistance *r* and emf $\mathscr{E}$. (*b*) The same circuit, now spread out in a line. The potentials encountered in traversing the circuit clockwise from *a* are also shown. The potential V_a is arbitrarily assigned a value of zero, and other potentials in the circuit are graphed relative to V_a.

Resistances in Series

$$\boxed{R_{eq} = \sum_i R_i}$$

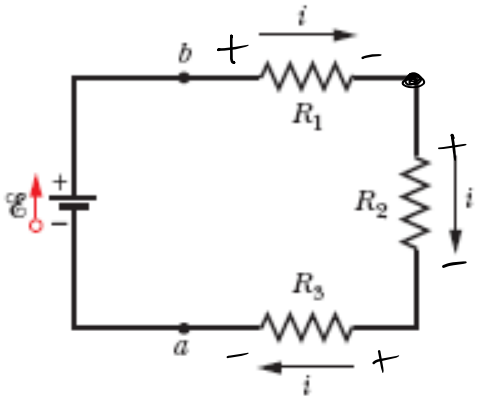

(a)

Series resistors and their equivalent have the same current ("ser-i").

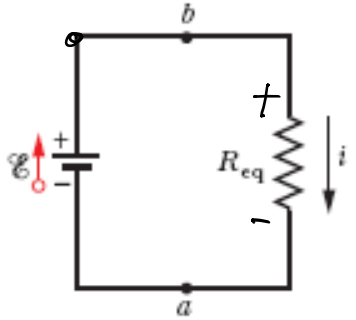

(b)

Fig. 27-5 (*a*) Three resistors are connected in series between points *a* and *b*. (*b*) An equivalent circuit, with the three resistors replaced with their equivalent resistance R_{eq}.

Kirchhoff voltage rule

$$-iR_1 + \mathcal{E} - iR_3 - iR_2 = 0$$

$$i = \frac{\mathcal{E}}{R_1 + R_2 + R_3} \qquad (1)$$

In the equivalent circuit.

$$\mathcal{E} - iR_{eq} = 0$$

$$i = \frac{\mathcal{E}}{R_{eq}} \qquad (2)$$

Comparing (1) and (2)

$$R_{eq} = R_1 + R_2 + R_3$$

MULTILOOP CIRCUITS

JUNCTION RULE: The sum of the currents entering any junction must be equal to the sum of the currents leaving that junction.

The current into the junction must equal the current out (charge is conserved).

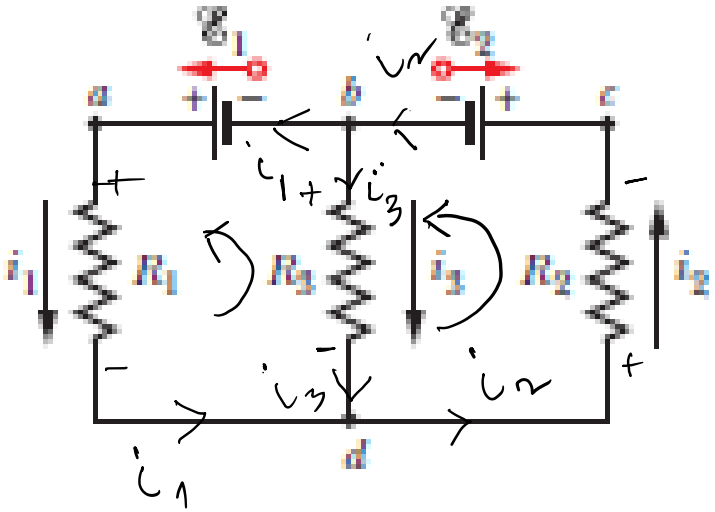

Figure 27-9 A multiloop circuit consisting of three branches: left-hand branch *bad*, right-hand branch *bcd*, and central branch *bd*. The circuit also consists of three loops: left-hand loop *badb*, right-hand loop *bcdb*, and big loop *badcb*.

At a junction in a circuit

Junction Rule

$$\sum_{j=1}^{n} i_{in,j} = \sum_{k=1}^{n} i_{out,k}$$

at junction d $\quad i_1 + i_3 = i_2$

at junction b $\quad i_2 = i_3 + i_1$

Loop Rule

From left loop $\quad \mathcal{E}_1 - i_1 R_1 + i_3 R_3 = 0$ (1)

From Right loop: $\quad -i_3 R_3 - i_2 R_2 - \mathcal{E}_2 = 0$ (2)

Big Loop

$$\mathcal{E}_1 - i_1 R_1 - i_2 R_2 - \mathcal{E}_2 = 0 \quad (3)$$

(3) can be obtained from (1) & (2)

JUNCTION RULE: The sum of the currents entering any junction must be equal to the sum of the currents leaving that junction.

1. If there are n junctions there will be n-1 independent current equations.

2. If there are n loops in a circuit, there will be (n-1) independent potential equations.

Resistances in Parallel

Parallel resistors and their equivalent have the same potential difference ("par-V").

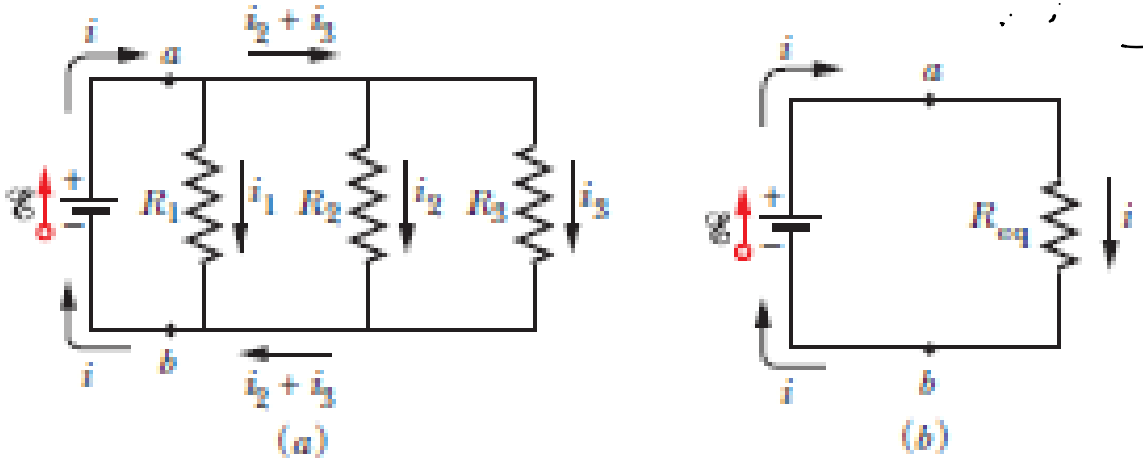

Figure 27-10 (*a*) Three resistors connected in parallel across points *a* and *b*. (*b*) An equivalent circuit, with the three resistors replaced with their equivalent resistance R_{eq}.

$$i_1 = \frac{\mathcal{E}}{R_1} \; ; \; i_2 = \frac{\mathcal{E}}{R_2} \; ; \; i_3 = \frac{\mathcal{E}}{R_3}$$

junction rule at a $\Rightarrow$

$$i = i_1 + i_2 + i_3 = \mathcal{E}\left(\frac{1}{R_1} + \frac{1}{R_2} + \frac{1}{R_3}\right)$$

$$\therefore \frac{i}{\mathcal{E}} = \frac{1}{R_1} + \frac{1}{R_2} + \frac{1}{R_3} \quad (1)$$

In the equivalent ckt.

$$i = \frac{\mathcal{E}}{R_{eq}}$$

$$\frac{i}{\mathcal{E}} = \frac{1}{R_{eq}} \quad (2)$$

Compare equations (1) and (2)

$$\frac{1}{R_{eq}} = \frac{1}{R_1} + \frac{1}{R_2} + \frac{1}{R_3}$$

$$\boxed{\frac{1}{R_{eq}} = \sum_{i=1}^{n} \frac{1}{R_i}}$$

Table 27-1 Series and Parallel Resistors and Capacitors

Series	Parallel	Series	Parallel
Resistors		Capacitors	
$R_{eq} = \sum_{j=1}^{n} R_j$ Eq. 27-7	$\frac{1}{R_{eq}} = \sum_{j=1}^{n} \frac{1}{R_j}$ Eq. 27-24	$\frac{1}{C_{eq}} = \sum_{j=1}^{n} \frac{1}{C_j}$ Eq. 25-20	$C_{eq} = \sum_{j=1}^{n} C_j$ Eq. 25-19
Same current through all resistors	Same potential difference across all resistors	Same charge on all capacitors	Same potential difference across all capacitors

Figure 27-13 shows a circuit whose elements have the following values: $\mathscr{E}_1 = 3.0\,\text{V}$, $\mathscr{E}_2 = 6.0\,\text{V}$, $R_1 = 2.0\,\Omega$, $R_2 = 4.0\,\Omega$. The three batteries are ideal batteries. Find the magnitude and direction of the current in each of the three branches.

$\mathcal{E}_1 = 3V$. $\mathcal{E}_2 = 6V$

$R_1 = 2\ \Omega$ $R_2 = 4\ \Omega$

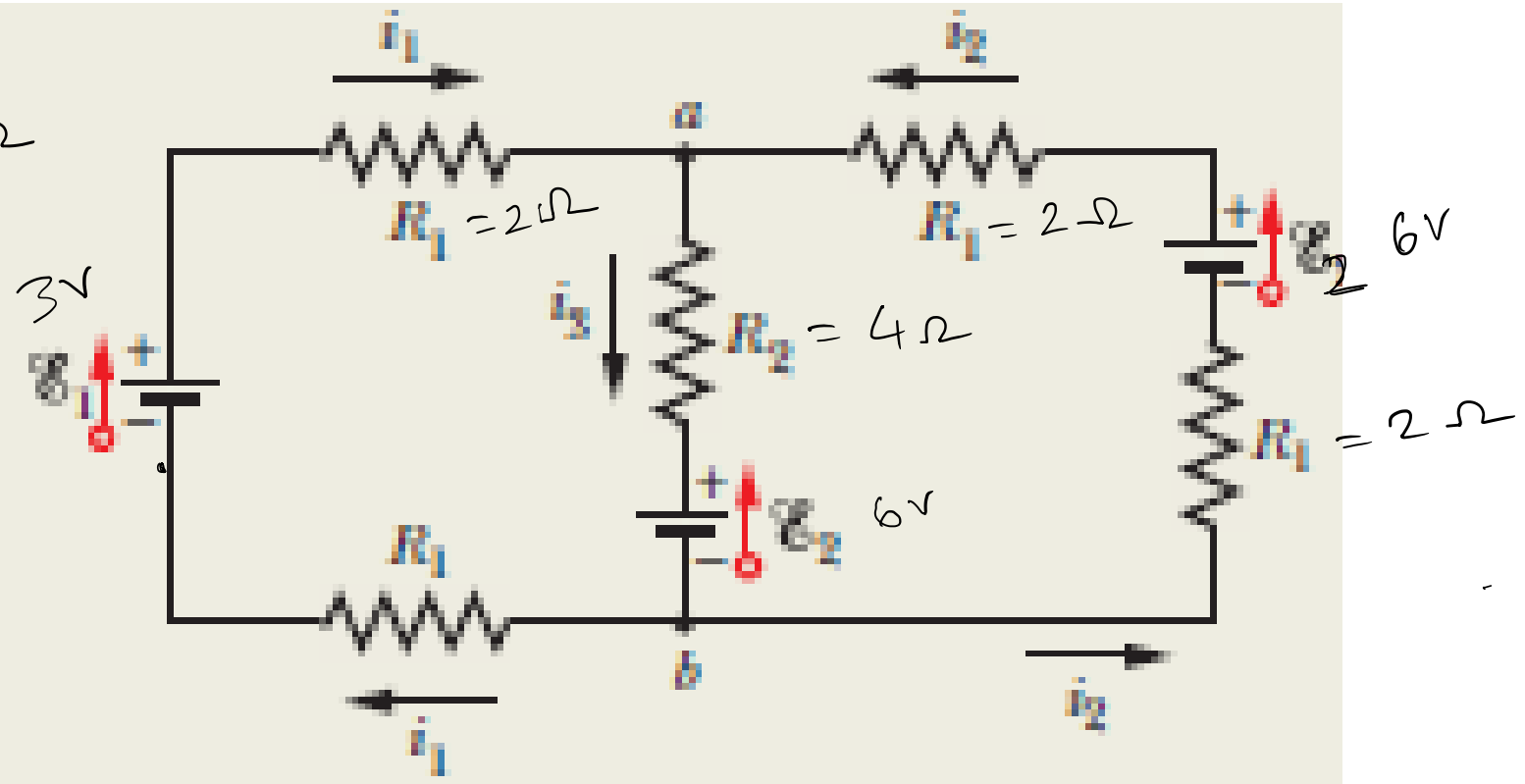

Figure 27-13 A multi-loop circuit with three ideal batteries and five resistances.

Junction Rule at (a) $i_3 = i_1 + i_2$ (1)

Loop rule on left loop (ACW) $\mathcal{E}_1 - i_1 R_1 - \mathcal{E}_2 - i_3 R_2 - i_1 R_1 = 0$ (2)

$\mathcal{E}_1 - i_1 2R_1 - (i_1 + i_2) R_2 - \mathcal{E}_2 = 0$

$3V - i_1 2.2 - i_1 R_2 - i_2 R_2 - 6V = 0$

$3V - 4i_1 - 4i_1 - 4i_2 - 6V = 0$

$3V - 8i_1 - 4i_2 - 6V = 0$

$-8i_1 - 4i_2 = 3V$ (3)

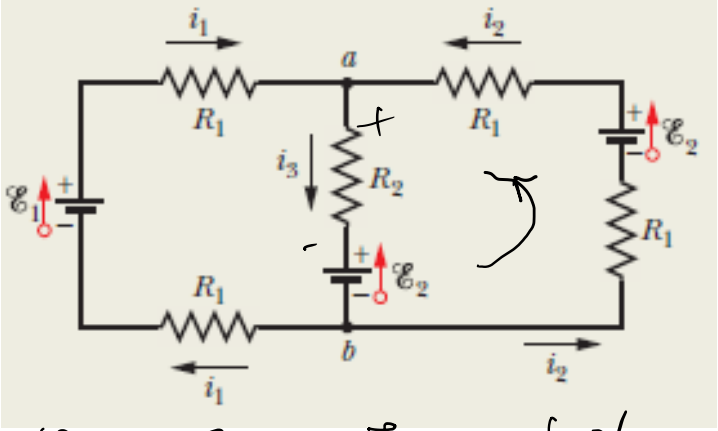

$\mathcal{E}_1 = 3V \quad \mathcal{E}_2 = 6V$

$R_1 = 2\Omega \quad R_2 = 4$

for the Right-hand loop a.c.w.

$$\mathcal{E}_2 + i_3 R_2 + i_2 R_1 - \mathcal{E}_2 + i_2 R_1 = 0$$

$$\mathcal{E}_2 + (i_1 + i_2) R_2 + i_2 R_1 - \mathcal{E}_2 + i_2 R_1 = 0$$

$$(i_1 + i_2) 4 + i_2 \times 2 + i_2 \times 2 = 0$$

$$+ 4 i_1 + 8 i_2 = 0 \Rightarrow \boxed{i_2 = -\frac{i_1}{2}}$$

put $i_2 = -i_1/2$ in equation — (3)

$$-8 i_1 + \frac{i_1}{2} \times 4 = 3 V$$

$$-6 i_1 = 3$$

$$\Rightarrow i_1 = -0.5 A$$

$$\therefore i_2 = -i/2 = 0.25 A$$

$$\therefore i_3 = i_1 + i_2 = -.5 + 0.25 = -0.25 A$$

+ve value of i_2 means that our choice of direction of i_2 is ok. But the negative answers for the currents i_1 and i_3 mean that our choices of directions of these two currents are wrong. We redraw the circuit with proper direction of currents as shown.

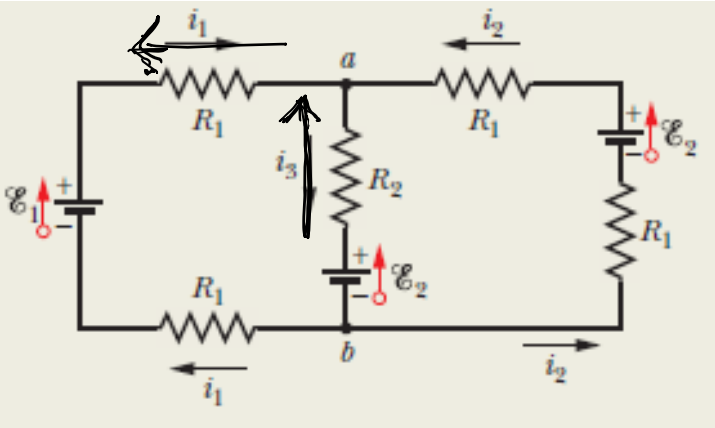

The Ammeter and the Voltmeter

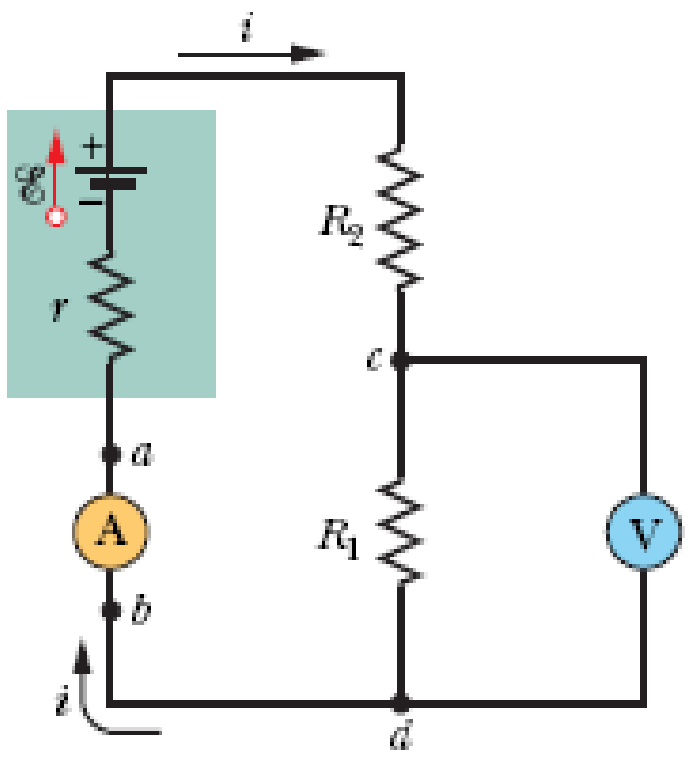

Fig. 27-14 A single-loop circuit, showing how to connect an ammeter (A) and a voltmeter (V).

① Ammeter is a low resistance device.

② Voltmeter is a high resistance device.

Why?

RC CIRCUITS

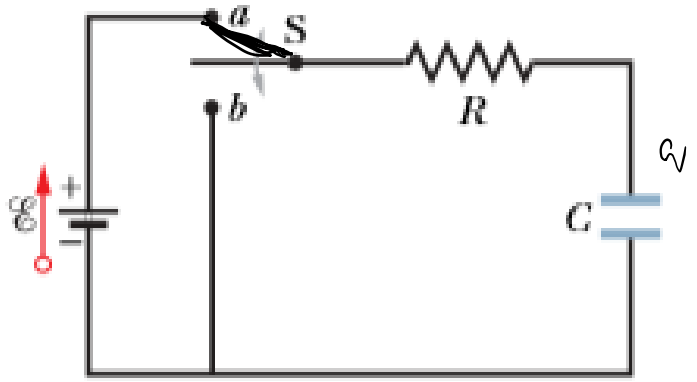

Fig. 27-15 When switch S is closed on *a*, the capacitor is *charged* through the resistor. When the switch is afterward closed on *b*, the capacitor *discharges* through the resistor.

loop rule $\mathcal{E} - V_R - V_C = 0$

$$\mathcal{E} - iR - \frac{q}{C} = 0 \qquad i = \frac{dq}{dt}$$

$$R\frac{dq}{dt} + \frac{q}{C} = \mathcal{E} \quad \text{(charging equation)}$$

soln $q = C\mathcal{E}\left(1 - e^{-t/RC}\right)$ (" ")

$$i = \frac{dq}{dt} = C\mathcal{E}\left(0 - \left(-\frac{1}{RC}\right)\right)e^{-t/RC}$$

$$i = \frac{\mathcal{E}}{R}\left(e^{-t/RC}\right)$$

at $t = 0$ $\quad i = \frac{\mathcal{E}}{R}e^{0} = \frac{\mathcal{E}}{R}$ the capacitor acts like a short.

at $t = \infty$ $\quad i = \frac{\mathcal{E}}{R}e^{-\infty} = \frac{\mathcal{E}}{R}\frac{1}{e^{\infty}} = 0$ the capacitor acts a open circuit.

The instantaneous voltage across the capacitor

$$V_c = \frac{q}{C} = \mathcal{E}\left(1 - e^{-t/RC}\right)$$

The time Constant RC (τ)

Unit of RC : $R = \frac{V}{i} = \frac{V}{Q/t}$ $\quad C = \frac{Q}{V}$

$$\therefore \quad RC = \frac{V}{Q/t} \times \frac{Q}{V} = t \text{ is time}$$

RC is called the time constant of the RC circuit. At time $t = \tau = RC$

The charge on the capacitor is

$$q_\tau = C\mathcal{E}\left(1 - e^{-RC/RC}\right) = C\mathcal{E}\left(1 - e^{-1}\right)$$

$$= 0.63\, C\mathcal{E}$$ So after one time constant the charge has increased from zero to 63% of its final value.

The capacitor's charge grows as the resistor's current dies out.

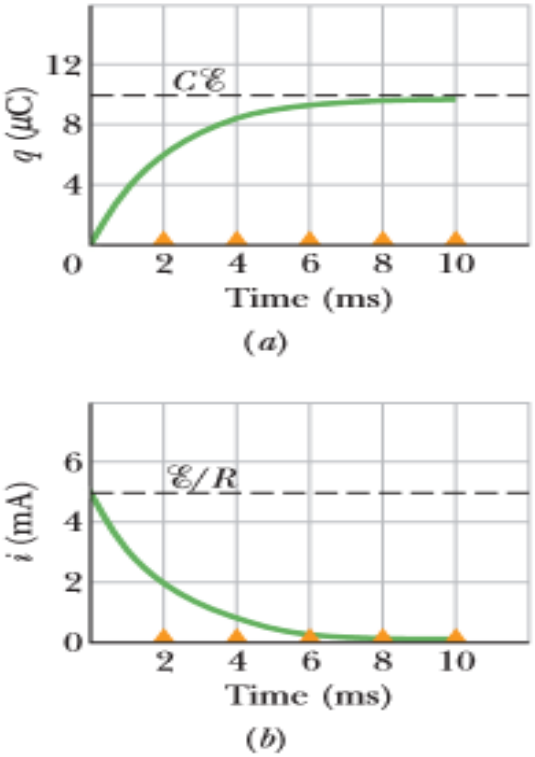

Fig. 27-16 (*a*) A plot of Eq. 27-33, which shows the buildup of charge on the capacitor of Fig. 27-15. (*b*) A plot of Eq. 27-34, which shows the decline of the charging current in the circuit of Fig. 27-15. The curves are plotted for $R = 2000\ \Omega$, $C = 1\ \mu F$, and $\mathcal{E} = 10$ V; the small triangles represent successive intervals of one time constant τ.

Discharging a Capacitor

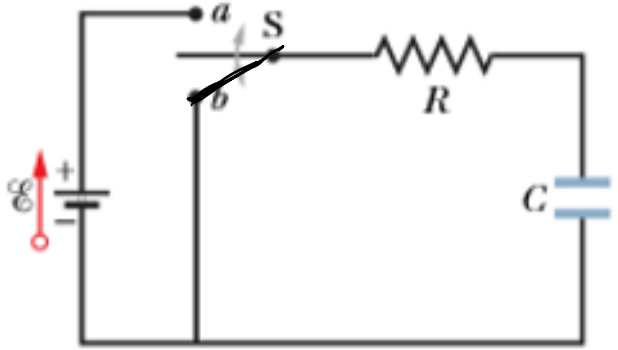

$$R\frac{dq}{dt} + \frac{q}{C} = 0 \qquad \text{soln } q = C\mathcal{E}e^{-t/RC}$$

at $t = \tau = RC$ $\quad q = C\mathcal{E}e^{-1} = 0.37\,C\mathcal{E}$

37% of its initial value $(q_0 =)\ C\mathcal{E}$.

$$i = \frac{dq}{dt} = -\frac{C\mathcal{E}}{RC}e^{-t/RC}$$

$$i = -\frac{\mathcal{E}}{R}e^{-t/RC}$$

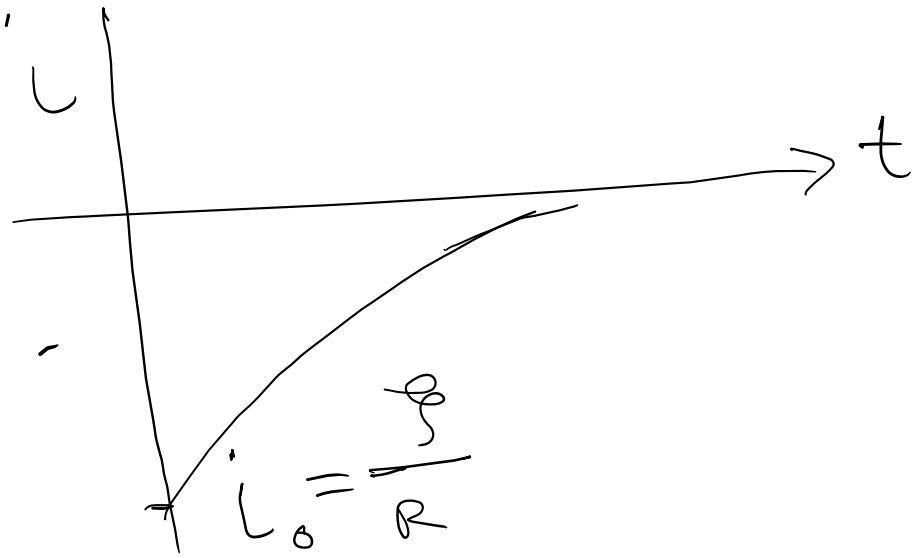

The discharging current is opposite of the charging current.