Welcome to the Physics class

Principles of Physics II

Lecture 21

Syllabus for TERM FINAL Examination

PHY 112 (4) Summer Semester 2023

Exam on 7th September, 2023 at 11:00 am in room no UB 20204

Chapter 25 to Chapter 30 and, Chapter 37
Capacitance to Maxwell's Equations and Relativity
HRW 10 Edition Extended

PHY112	04	Professor Dr. A. F. M. Yusuf Haider	YUH	UB20204	ST DAY 2 Thursday	07-09-2023	11:00 am	12:30 pm

Suggested points and problems For Term Final Summer 2022

Note: This list is intended only for practice. The exam question could be similar, but may not be from this list.

The following chapter, problem number, etc. refers to the 9th edition (extended) of the Resnick, Halliday and Walker's book

Legend: CP = check point, SP = sample problem in the book (solved problems) on a particular page, Pr = unsolved problems in the book at the end of the chapter.

Chapter: 25:

SP: P665, P666, P671, P673.

CP: 1, 2, 3.

Pr **11, 15, 57**.

Chapter 26:

SP: P687, P688, P691.

CP: 1, 2, 3, 5.

Pr: 8.

Chapter 27:

SP: P716, P719, P723.

CP: 1, 2, 3, 4, 5.

Pr: *18, 33, 45,*

Chapter: 28:

CP: 1,2,3,4.

SP: P739, P746, P751, P755.

Pr: *4, 41, 42, 85.*

Chapter 29:

SP: P768, P769, P774, P778.

CP: 1,2, 3.

Pr: *4,11, 21, 45.*

Chapter 30:

SP: P793, P796, P812.

CP: 1, 2, 5, 6

Pr: *3, 15,*

Chapter 37:

SP: P1030

CP: 1, 2.

Pr: *1*, 4, *9*.

Often the dimensionless ratio v/c in Eq. 37-7 is replaced with β, called the **speed parameter,** and the dimensionless inverse square root in Eq. 37-7 is often replaced with γ, called the **Lorentz factor:**

$$\gamma = \frac{1}{\sqrt{1-\beta^2}} = \frac{1}{\sqrt{1-(v/c)^2}}. \tag{37-8}$$

Speed parameter $\beta = \frac{v}{c}$ (dimensionless ratio)

THE RELATIVITY OF LENGTH

Fig. 37-7 If you want to measure the front-to-back length of a penguin while it is moving, you must mark the positions of its front and back simultaneously (in your reference frame), as in (*a*), rather than at different times, as in (*b*).

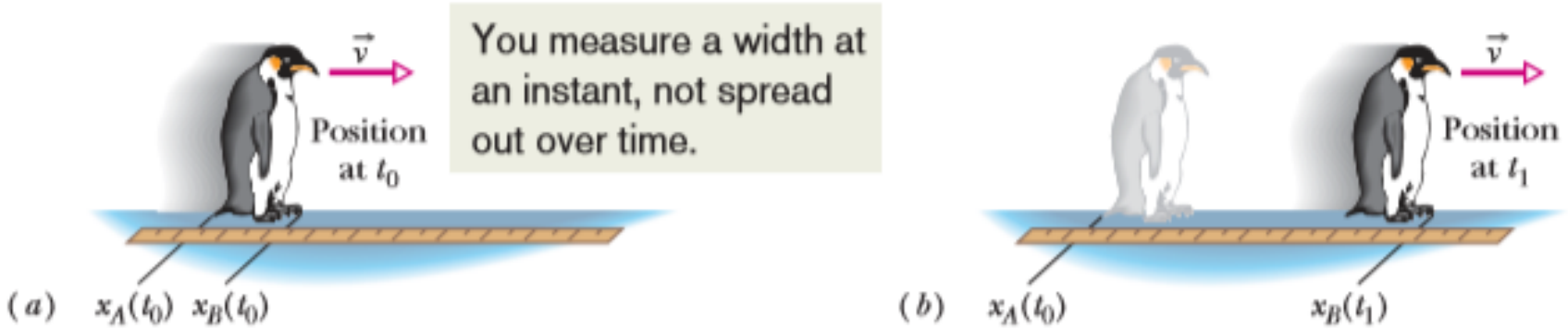

Let L_0 be the length of a rod at rest (you and the rod are in the same reference frame, the rod's rest frame)

Now if there is a relative motion at speed v betn you and the rod along the length of the rod, then with simultaneous measurement of its end points you obtain a length L given by

(PTO)

$$L = L_0\sqrt{1-\beta^2} = \frac{L_0}{\gamma} \quad \text{(length contraction).}$$

$L < L_0$

L_0 is the proper length and L is the contracted length

Remember

The length L_0 of an object measured in the rest frame of the object is its **proper length** or **rest length.** Measurements of the length from any reference frame that is in relative motion *parallel* to that length are always less than the proper length.

Find the speed of the inertial frame from where the length of a meter stick will appear to be 0.5 meter.

$$L = L_0\sqrt{1-\frac{v^2}{c^2}}$$

L = Contracted length = 0.5 meter

L_0 = proper length = 1.0 meter

$$\therefore \left(\frac{L}{L_0}\right)^2 = 1-\left(\frac{v}{c}\right)^2 \Rightarrow \left(\frac{v}{c}\right)^2 = 1-\left(\frac{L}{L_0}\right)^2$$

$$v^2 = c^2\left(1-\frac{L^2}{L_0^2}\right) \Rightarrow v = c\sqrt{1-L^2/L_0^2}$$

$$\sim \quad v = c\sqrt{1-\left(\frac{.5}{1.0}\right)^2} = c\sqrt{1-.25}$$

$$\therefore \quad v = c\sqrt{0.75} = 0.866\,c$$

i.e. 86.6% of the velocity of light in vacuum.

Syllabus for TERM FINAL Examination

PHY 112 (4) Summer Semester 2023

Exam on 7th September, 2023 at 11:00 am in room no UB 20204

Chapter 25 to Chapter 30 and, Chapter 37
Capacitance to Maxwell's Equations and Relativity
HRW 10 Edition Extended

PHY112	04	Professor Dr. A. F. M. Yusuf Haider	YUH	UB20204	ST DAY 2 Thursday	07-09-2023	11:00 am	12:30 pm

Suggested points and problems For Term Final Summer 2022

Note: This list is intended only for practice. The exam question could be similar, but may not be from this list.

The following chapter, problem number, etc. refers to the 9th edition (extended) of the Resnick, Halliday and Walker's book

Legend: CP = check point, SP = sample problem in the book (solved problems) on a particular page, Pr = unsolved problems in the book at the end of the chapter.

Chapter: 25:

SP: P665, P666, P671, P673.

CP: 1, 2, 3.

Pr **11, 15, 57**.

Chapter 26:

SP: P687, P688, P691.

CP: 1, 2, 3, 5.

Pr: 8.

Chapter 27:

SP: P716, P719, P723.

CP: 1, 2, 3, 4, 5.

Pr: *18, 33, 45,*

Chapter: 28:

CP: 1,2,3,4.

SP: P739, P746, P751, P755.

Pr: *4, 41, 42, 85.*

Chapter 29:

SP: P768, P769, P774, P778.

CP: 1,2, 3.

Pr: *4,11, 21, 45.*

Chapter 30:

SP: P793, P796, P812.

CP: 1, 2, 5, 6

Pr: *3, 15,*

Chapter 37:

SP: P1030

CP: 1, 2.

Pr: *1*, 4, *9*.

The mean lifetime of stationary muons is measured to be 2.2000 μs. The mean lifetime of high-speed muons in a burst of cosmic rays observed from Earth is measured to be 16.000 μs. To five significant figures, what is the speed parameter β of these cosmic- ray muons relative to Earth?

Ch 37 / Pr 1

We Know $\Delta t = \dfrac{\Delta t_0}{\sqrt{1-\left(\frac{v}{c}\right)^2}} = \dfrac{\Delta t_0}{\sqrt{1-\beta^2}}$ $\quad \beta = \dfrac{v}{c}$ = speed parameter

$$\Delta t^2 = \frac{\Delta t_0^2}{1-\beta^2} \Rightarrow 1-\beta^2 = \frac{\Delta t_0^2}{\Delta t^2} \Rightarrow \beta^2 = 1-\left(\frac{\Delta t_0}{\Delta t}\right)^2$$

$$\therefore \beta = \left[1-\left(\frac{2.200\ \mu s}{16.00\ \mu s}\right)^2\right]^{1/2}$$

$$= 0.99050 \quad \text{Ans.}$$

$\Delta t_0 = 2.2\ \mu s$,

$\Delta t = 16\ \mu s$

A spaceship of rest length 130 m races past a timing station at a speed of 0.740*c*. (a) What is the length of the spaceship as measured by the timing station? (b) What time interval will the station clock record between the passage of the front and back ends of the ship?

Ch 37 / 9

Let L_0 be the rest length of the space ship (OR measured from the reference frame attached to the moving spaceship)

(a) L is the length measured by the timing station which is at rest. So there is a relative velocity of 0.74c betn the spaceship and the timing station.

$$\therefore \quad L = L_0\sqrt{1-\left(\frac{v}{c}\right)^2} \quad \text{or}$$

$$L = 130\,m\sqrt{1-\left(\frac{0.74c}{c}\right)^2} = 130\sqrt{1-0.74^2} = 87.4\,m$$

(b) The time interval of the passage of the space ship:

$$\Delta t = \frac{L}{v} = \frac{87.4\,m}{0.74 \times 3 \times 10^{10}} = 3.94 \times 10^{-7}\,s$$

70 A slab of copper of thickness $b = 2.00$ mm is thrust into a parallel-plate capacitor of plate area $A = 2.40$ cm^2 and plate separation $d = 5.00$ mm, as shown in Fig. 25-57; the slab is exactly halfway between the plates. (a) What is the capacitance after the slab is introduced? (b) If a charge $q = 3.40\ \mu$C is maintained on the plates, what is the ratio of the stored energy before to that after the slab is inserted? (c) How much work is done on the slab as it is inserted? (d) Is the slab sucked in or must it be pushed in?

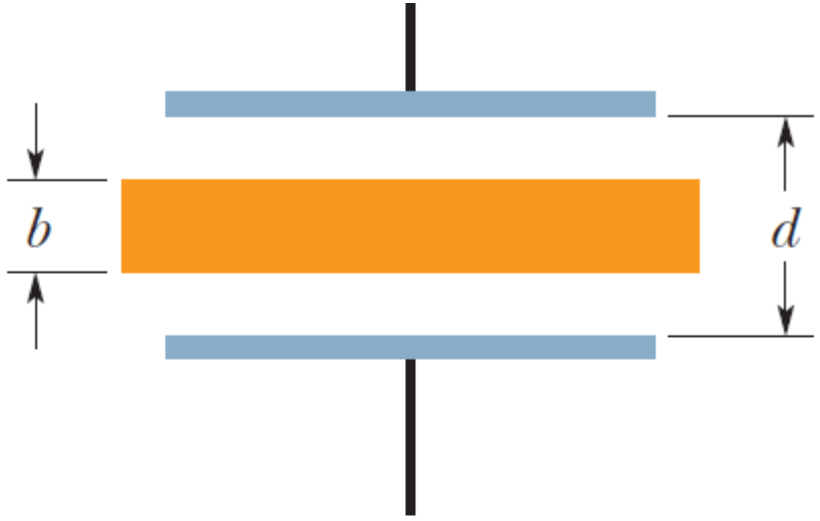

Figure 25-57
Problems 70 and 71.

70/ch 25.

(a) The ~~length~~ separation d is effectively shortened by b, so $C' = \frac{\varepsilon_0 A}{(d-b)} = \cancel{8.85\times10^{-12}\times 2}$

or $C' = \frac{8.85\times10^{-12}\times 2.4\times10^{-4}}{5\times10^{-3} - 2\times10^{-3}} = 0.708\,pF$

(b) The energy before, divided by the energy after inserting the slab is

$$\frac{U}{U'} = \frac{q^2/2C}{q^2/2C'} = \frac{C'}{C} = \frac{\varepsilon_0 A/(d-b)}{\varepsilon_0 A/d}$$

$$= \frac{d}{d-b} = \frac{5\times10^{-3}}{(5-2)\times10^{-3}} = \frac{5}{3} = 1.67.$$

(c) The work done $= W = \Delta U$

$$= U' - U = \frac{q^2}{2}\left(\frac{1}{C'} - \frac{1}{C}\right) = \frac{q^2}{2}\frac{C-C'}{CC'}$$

$$= \frac{q^2}{2}\frac{\varepsilon_0 A\left(\frac{1}{d} - \frac{1}{d-b}\right)}{\frac{\varepsilon_0 A}{d}\,\frac{\varepsilon_0 A}{d-b}} = \frac{q^2(d-b-d)}{2\varepsilon_0 A}$$

$$= -\frac{q^2 b}{2\varepsilon_0 A} = \frac{-(3.4\times10^{-6})^2\times 2\times10^{-3}}{2\times 8.85\times10^{-12}\times 2.4\times10^{-4}}$$

$= -5.44\,J$ (work done by ext. agent)

(d) Since $W<0$; The slab is sucked in

* In fact work is done by the system.

•58 In an RC series circuit, emf $\mathscr{E} = 12.0$ V, resistance $R = 1.40\ \text{M}\Omega$, and capacitance $C = 1.80\ \mu\text{F}$. (a) Calculate the time constant. (b) Find the maximum charge that will appear on the capacitor during charging. (c) How long does it take for the charge to build up to $16.0\ \mu\text{C}$?

58. (a) $\underline{\tau = RC} = (1.4 \times 10^{6})(1.80 \times 10^{-6})$

$= 2.52$ Sec.

(b) $q^{max} = \mathcal{E}C = 12 \times 1.8\ \mu F = 21.6\ \mu C$

(c) The charging of a capacitor takes place according to the following equation.

$$q(t) = q_0 \left(1 - e^{-t/RC}\right)$$

q_0 = final charge = q^{max} = 21.6 μC

$RC = \tau = 2.52$ sec ; $q(t) = 16$ μC. $t = ?$

$$\frac{q(t)}{q_0} = 1 - e^{-t/RC}$$

$$\therefore 1 - \frac{q(t)}{q_0} = e^{-t/RC}$$

$$\text{or} \quad \frac{q_0 - q}{q_0} = e^{-t/RC}$$

$$\text{or} \quad -\ln\left(\frac{q_0 - q}{q_0}\right) = +t/RC$$

$$\text{or} \quad \ln \frac{q_0}{q_0 - q} = t/RC$$

$$\therefore RC \ln \frac{q_0}{q_0 - q} = \boxed{t} = 2.52 \ln\left(\frac{21.6\ \mu C}{21.6 - 16.0\ \mu C}\right)$$

$$\boxed{t = 3.40 \text{ Sec}}$$

••48 Figure 25-47 shows a parallel-plate capacitor with a plate area $A = 5.56\ \text{cm}^2$ and separation $d = 5.56$ mm. The left half of the gap is filled with material of dielectric constant $\kappa_1 = 7.00$; the right half is filled with material of dielectric constant $\kappa_2 = 12.0$. What is the capacitance?

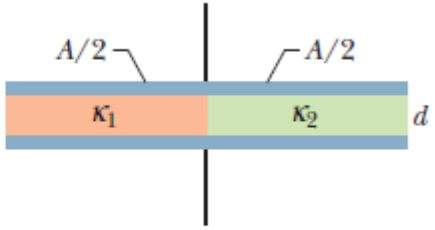

Figure 25-47 Problem 48.

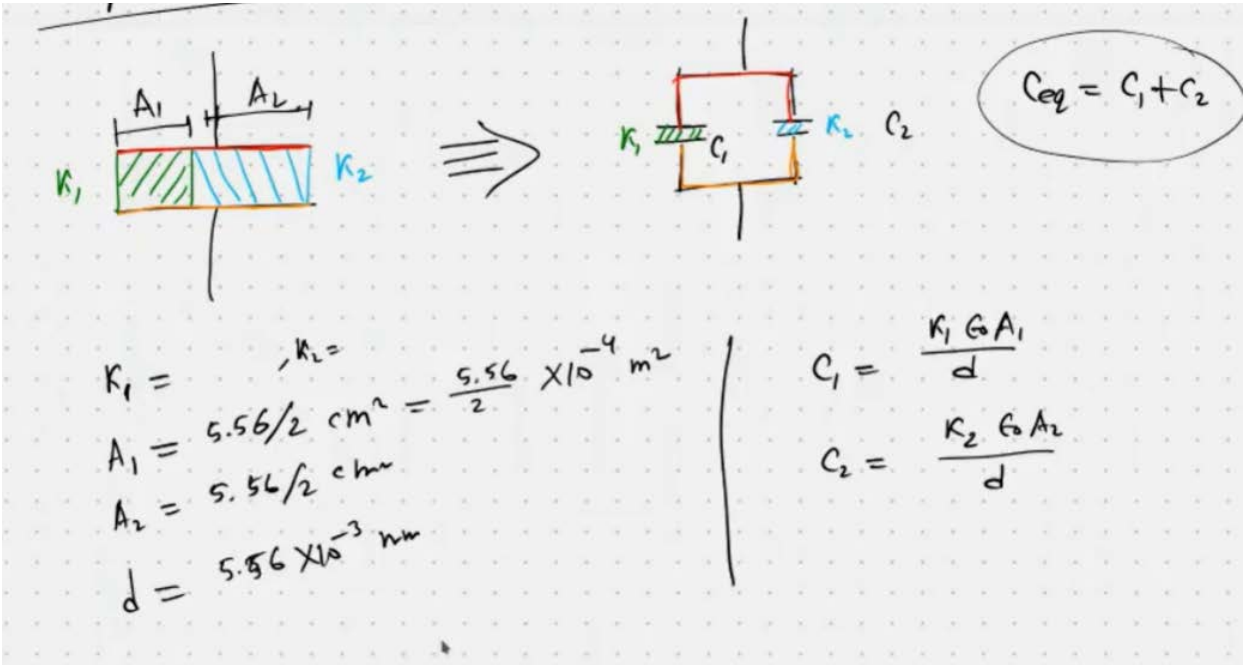

The capacitor can be viewed as two capacitors C_1 and C_2 in parallel, each with surface area $A/2$ and plate separation d, filled with dielectric materials with dielectric constants κ_1 and κ_2, respectively. Thus, (in SI units),

$\epsilon \to \epsilon_0 \kappa$

$$C = C_1 + C_2 = \frac{\varepsilon_0 (A/2)\kappa_1}{d} + \frac{\varepsilon_0 (A/2)\kappa_2}{d} = \frac{\varepsilon_0 A}{d}\left(\frac{\kappa_1 + \kappa_2}{2}\right)$$

$$= \frac{(8.85\times10^{-12}\ \text{C}^2/\text{N}\cdot\text{m}^2)(5.56\times10^{-4}\ \text{m}^2)}{5.56\times10^{-3}\ \text{m}}\left(\frac{7.00+12.00}{2}\right) = 8.41\times10^{-12}\ \text{F}.$$

A small but measurable current of 1.2 x10 (-10) a exists in a copper wire whose diameter is 2.5 mm. The number of charge carriers per unit volume is 8.49 x 10 (28)/meter cube. Assuming the current is uniform, calculate the (a) current density and (b) electron drift speed.

Ch 26 / Pr. 8

(a) $J = \frac{i}{A} = \frac{i}{\pi \left(\frac{d}{2}\right)^2} = \frac{4 \times (1.2 \times 10^{-10})}{\pi (2.5 \times 10^{-3})^2}$

$= 2.4 \times 10^{-5} \ A/m^2$

(b) $J = n e v_d$

$v_d = \frac{J}{ne} = \frac{2.4 \times 10^{-5} \ A/m^2}{8.49 \times 10^{28}/m^3 \times 1.6 \times 10^{-19} \ C}$

$= 1.8 \times 10^{-15} \ m/s$

Figure 27-11*a* shows a multiloop circuit containing one ideal battery and four resistances with the following values:

$$R_1 = 20\ \Omega, \quad R_2 = 20\ \Omega, \quad \mathscr{E} = 12\ \text{V},$$
$$R_3 = 30\ \Omega, \quad R_4 = 8.0\ \Omega.$$

(a) What is the current through the battery?

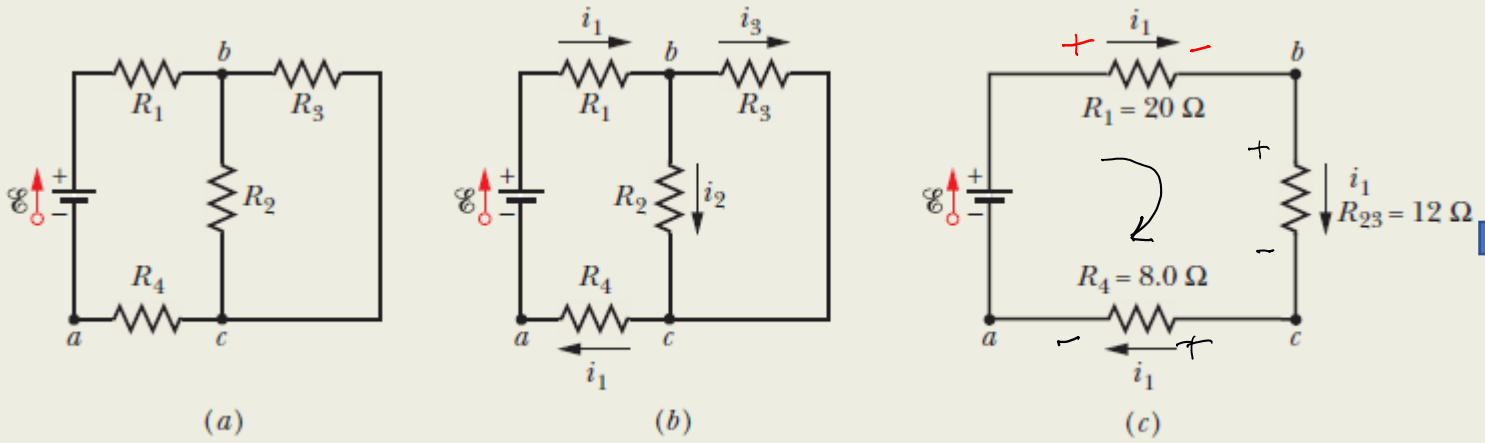

$$R_{23} = \frac{R_2 R_3}{R_2 + R_3} = \frac{(20\ \Omega)(30\ \Omega)}{50\ \Omega} = 12\ \Omega.$$

We can now redraw the circuit as in Fig. 27-11*c*; note that the current through R_{23} must be i_1 because charge that moves through R_1 and R_4 must also move through R_{23}. For this simple one-loop circuit, the loop rule (applied clockwise from point *a* as in Fig. 27-11*d*) yields

$$+\mathscr{E} - i_1 R_1 - i_1 R_{23} - i_1 R_4 = 0.$$

Substituting the given data, we find

$$12\ \text{V} - i_1(20\ \Omega) - i_1(12\ \Omega) - i_1(8.0\ \Omega) = 0,$$

which gives us

$$i_1 = \frac{12\ \text{V}}{40\ \Omega} = 0.30\ \text{A}. \qquad \text{(Answer)}$$

(b) What is the current i_2 through R_2?

(c) What is the current i_3 through R_3?

Applying the loop rule yields the current.

Applying $V = iR$ yields the potential difference.

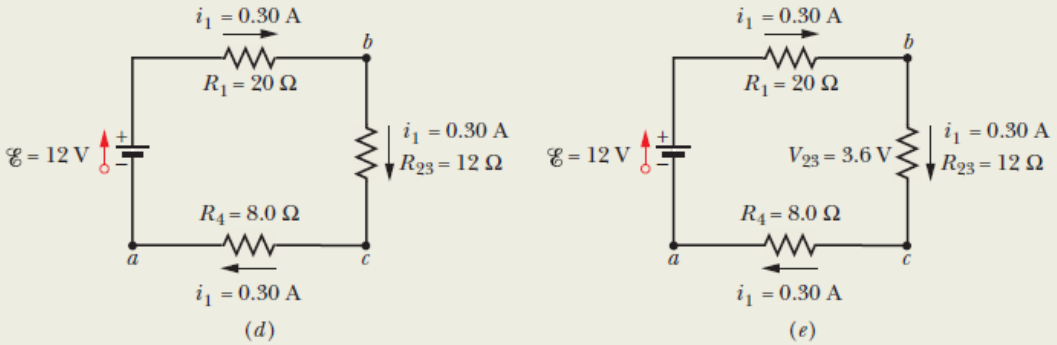

Working backward: We know that the current through R_{23} is $i_1 = 0.30$ A. Thus, we can use Eq. 26-8 ($R = V/i$) and Fig. 27-11*e* to find the potential difference V_{23} across R_{23}. Setting $R_{23} = 12\ \Omega$ from (a), we write Eq. 26-8 as

$$V_{23} = i_1 R_{23} = (0.30\ \text{A})(12\ \Omega) = 3.6\ \text{V}.$$

The potential difference across R_2 is thus also 3.6 V (Fig. 27-11*f*), so the current i_2 in R_2 must be, by Eq. 26-8 and Fig. 27-11*g*,

$$i_2 = \frac{V_2}{R_2} = \frac{3.6\ \text{V}}{20\ \Omega} = 0.18\ \text{A}. \qquad \text{(Answer)}$$

(c) What is the current i_3 through R_3?

We can answer by using either of two techniques: (1) Apply Eq. 26-8 as we just did. (2) Use the junction rule, which tells us that at point *b* in Fig. 27-11*b*, the incoming current i_1 and the outgoing currents i_2 and i_3 are related by

$$i_1 = i_2 + i_3.$$

Calculation: Rearranging this junction-rule result yields the result displayed in Fig. 27-11*g*:

$$i_3 = i_1 - i_2 = 0.30\ \text{A} - 0.18\ \text{A}$$
$$= 0.12\ \text{A}. \qquad \text{(Answer)}$$

$i_3 R_3 = 3.6\text{V}$

$i_3 = 3.6/30 = .12\text{A}$

$i_3 =$

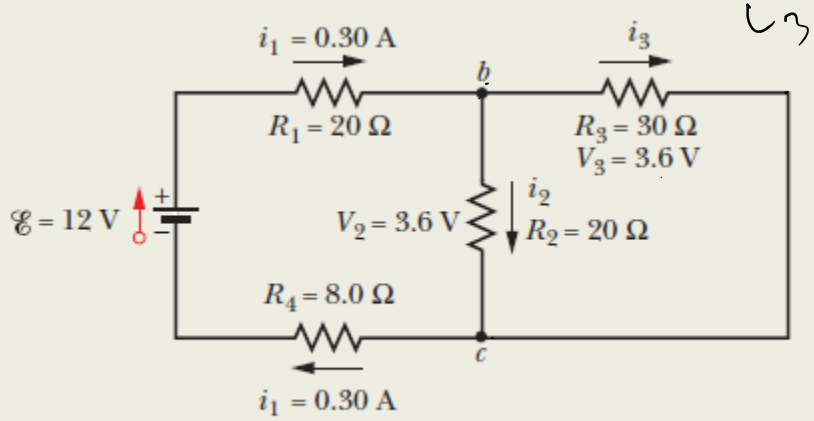

(*f*)

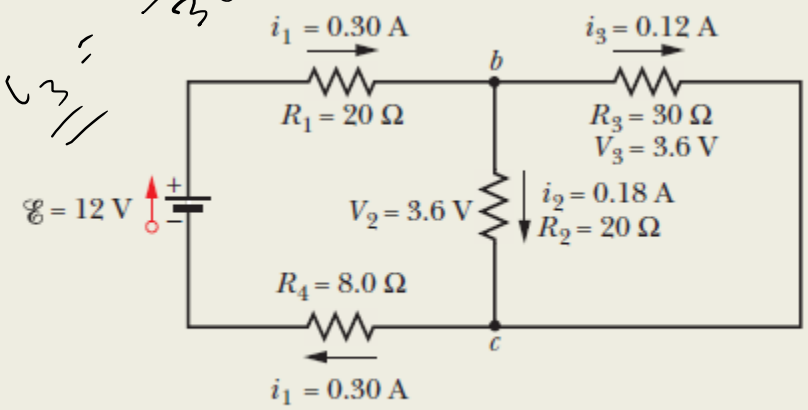

(*g*)

Figure 27-13 shows a circuit whose elements have the following values: $\mathscr{E}_1 = 3.0$ V, $\mathscr{E}_2 = 6.0$ V, $R_1 = 2.0\,\Omega$, $R_2 = 4.0\,\Omega$. The three batteries are ideal batteries. Find the magnitude and direction of the current in each of the three branches.

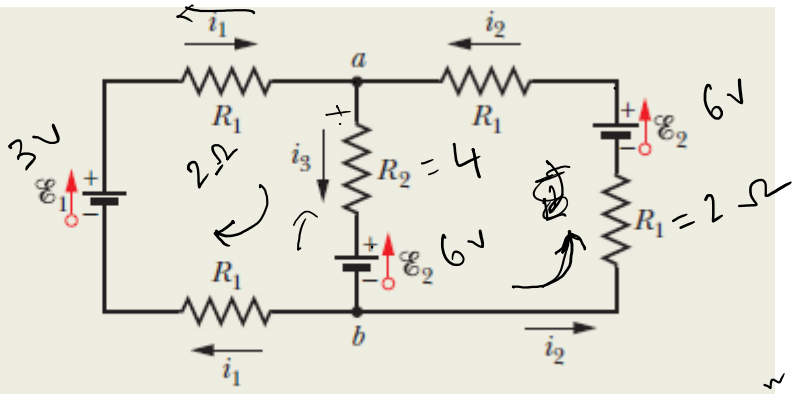

Figure 27-13 A multi-loop circuit with three ideal batteries and five resistances.

Junction rule: Using arbitrarily chosen directions for the currents as shown in Fig. 27-13, we apply the junction rule at point a by writing

$$i_3 = i_1 + i_2. \tag{27-26}$$

An application of the junction rule at junction b gives only the same equation, so we next apply the loop rule to any two of the three loops of the circuit.

Left-hand loop: We first arbitrarily choose the left-hand loop, arbitrarily start at point b, and arbitrarily traverse the loop in the clockwise direction, obtaining

$$-i_1R_1 + \mathscr{E}_1 - i_1R_1 - (i_1 + i_2)R_2 - \mathscr{E}_2 = 0,$$

where we have used $(i_1 + i_2)$ instead of i_3 in the middle branch. Substituting the given data and simplifying yield

$$i_1(8.0\,\Omega) + i_2(4.0\,\Omega) = -3.0\text{ V}. \tag{27-27}$$

Right-hand loop: For our second application of the loop rule, we arbitrarily choose to traverse the right-hand loop counterclockwise from point b, finding

$$-i_2R_1 + \mathscr{E}_2 - i_2R_1 - (i_1 + i_2)R_2 - \mathscr{E}_2 = 0.$$

Substituting the given data and simplifying yield

$$i_1(4.0\,\Omega) + i_2(8.0\,\Omega) = 0. \tag{27-28}$$

$\Rightarrow i_1 = -2i_2$

eq

$i_1 = 27 - 27$

$(-2i_2)8 + 4i_2 = -3$

$-16i_2 + 4i_2 = -3$

$i_2 = \frac{-3}{12}$

$= 0.25$

$i_1 = -2i_2$

$= -0.50$

Combining equations: We now have a system of two equations (Eqs. 27-27 and 27-28) in two unknowns (i_1 and i_2) to solve either "by hand" (which is easy enough here) or with a "math package." (One solution technique is Cramer's rule, given in Appendix E.) We find

$$i_1 = -0.50\text{ A}. \tag{27-29}$$

(The minus sign signals that our arbitrary choice of direction for i_1 in Fig. 27-13 is wrong, but we must wait to correct it.) Substituting $i_1 = -0.50$ A into Eq. 27-28 and solving for i_2 then give us

$$i_2 = 0.25\text{ A}. \qquad \text{(Answer)}$$

With Eq. 27-26 we then find that

$$i_3 = i_1 + i_2 = -0.50\text{ A} + 0.25\text{ A}$$
$$= -0.25\text{ A}.$$

••30 GO In Fig. 27-41, the ideal batteries have emfs $\mathscr{E}_1 = 10.0$ V and $\mathscr{E}_2 = 0.500\mathscr{E}_1$, and the resistances are each 4.00 Ω. What is the current in (a) resistance 2 and (b) resistance 3?

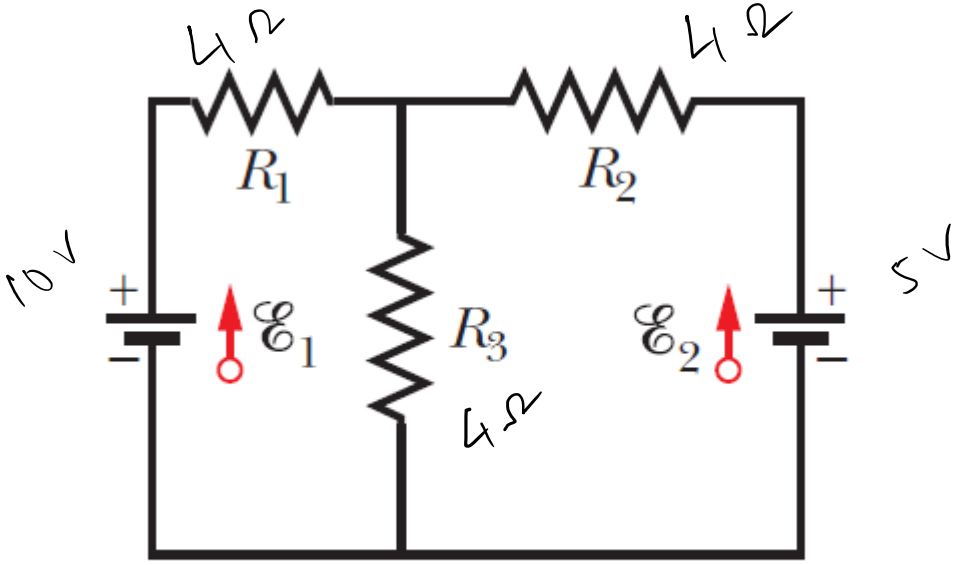

Figure 27-41 Problems 30, 41,

Problem no 30, chapter 27

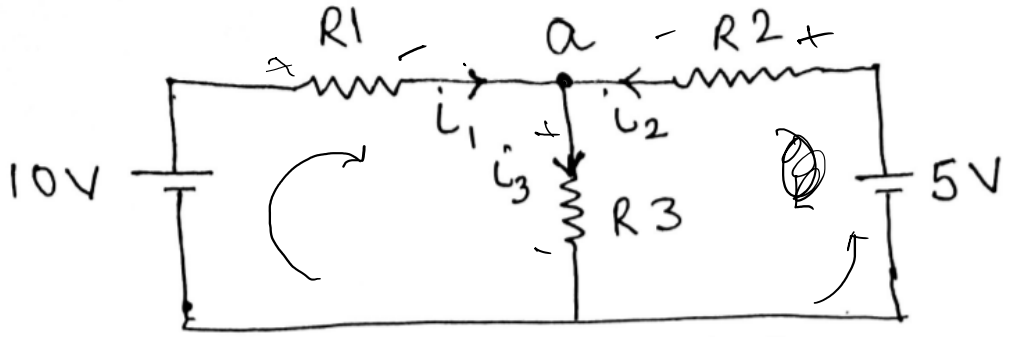

$R1 = R2 = R3 = 4\,\Omega$

Applying junction rule at "a", $i_1 + i_2 = i_3$

Loop rule ~~at~~ on left loop

$$10V - (i_1 + i_2)R3 - i_1 R_1 = 0 \checkmark$$

Loop rule on right loop

$$5V - (i_1 + i_2)R3 - i_2 R_2 = 0 \checkmark$$

$$\Rightarrow 10V = (i_1 + i_2)4 + 4i_1 = 8i_1 + 4i_2$$

$$2i_1 + i_2 = 2.5 \Rightarrow \boxed{i_2 = 2.5 - 2i_1}$$

$$\Rightarrow 5V = (i_1 + i_2)4 + i_2 4 = 4i_1 + 8i_2$$

$$5V = 4i_1 + 8(2.5 - 2i_1)$$

or $5V = 4i_1 + 20 - 16i_1$

$$-15 = -12i_1 \Rightarrow \boxed{i_1 = 1.25\,A}$$

$$i_2 = 2.5 - 2i = 2.5 - 2 \times 1.25 = 0$$

$$\boxed{i_2 = 0} \quad (a)$$

$$i_3 = i_1 + i_2 = 1.25 + 0$$

$$\boxed{i_3 = 1.25} \quad (b)$$

••33 GO In Fig. 27-44, the current in resistance 6 is $i_6 = 1.40$ A and the resistances are $R_1 = R_2 = R_3 = 2.00\ \Omega$, $R_4 = 16.0\ \Omega$, $R_5 = 8.00\ \Omega$, and $R_6 = 4.00\ \Omega$. What is the emf of the ideal battery?

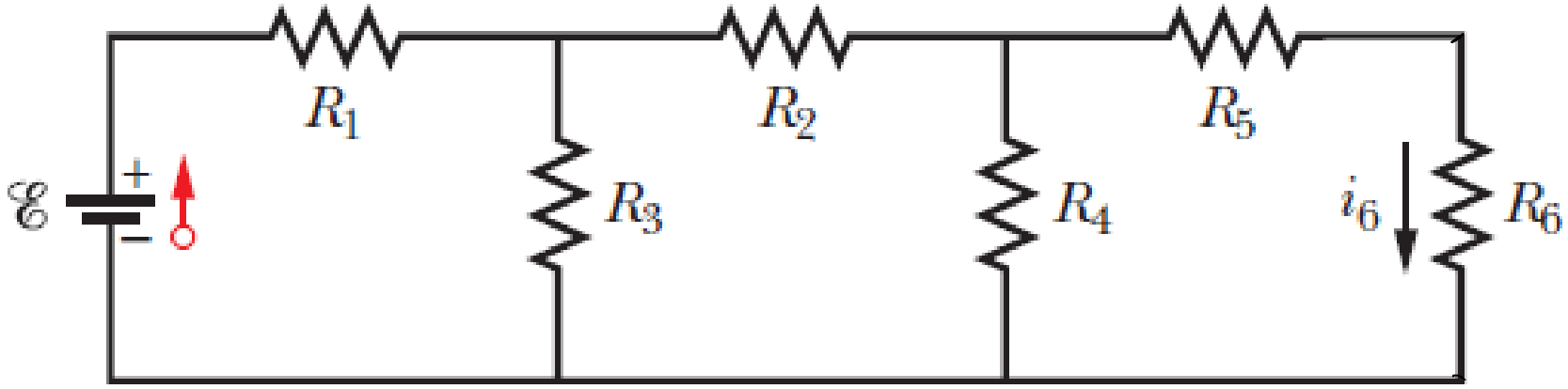

$i_6 = 1.40$ A

Figure 27-44 Problem 33.

i_6

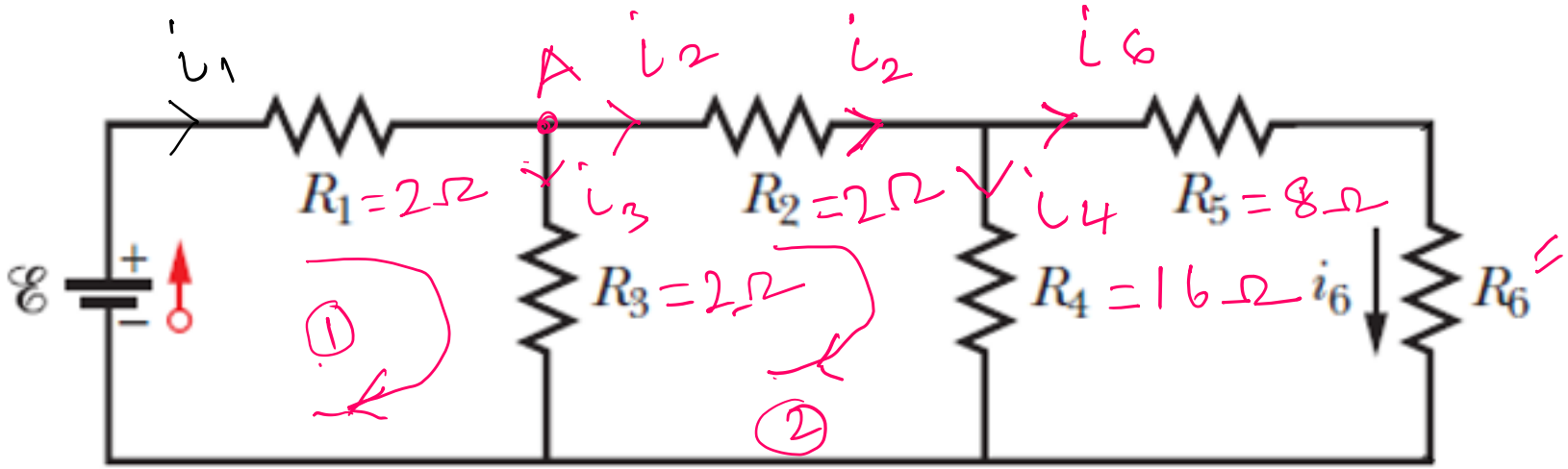

$i_6 = 1.40$ A

$i_1 = i_2 + i_3$

$i_2 = i_4 + i_6$

$i_4 = 1.05$ A

$i_2 = 2.45$ A

$V_4 = i_6 (R_5 + R_6) = 1.4 (8+4) = 1.4 \times 12 = 16.8$ V

$\therefore \quad i_4 = \dfrac{V_4}{R_4} = \dfrac{16.8}{16} = 1.05$ A

$i_2 = i_4 + i_6 = 1.05 + 1.4$ A $= 2.45$ A

$V_2 = R_2 \times i_2 = 2 \times 2.45 = 4.9$ V.

From loop rule applied to loop 2

$$-V_2 - V_4 + V_3 = 0$$

$$V_3 = V_2 + V_4 = 4.9 + 16.8$$

$$\therefore V_3 = 21.7\ V$$

$$\therefore i_3 = \frac{V_3}{R_3} = \frac{21.7}{2} = 10.85\ A$$

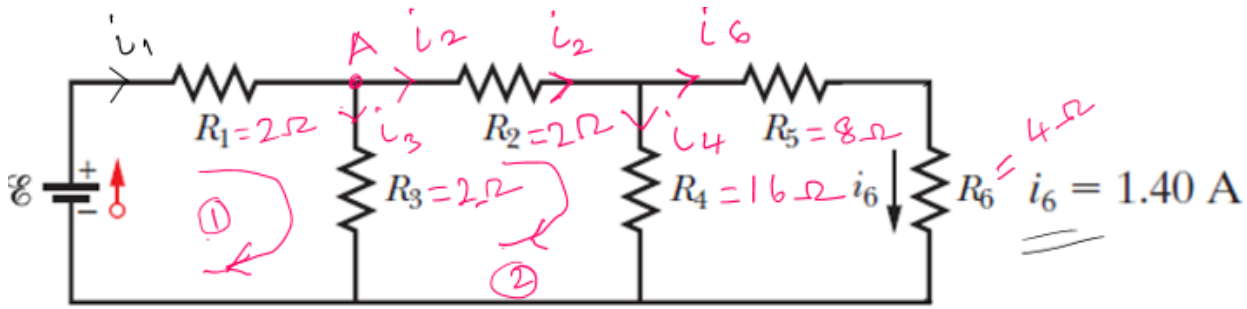

Apply junction rule at node A

$$i_1 = i_2 + i_3 = 2.45 + 10.85 = 13.30\ A$$

$$V_1 = i_1 \times R_1 = 13.3 \times 2 = 26.6\ V$$

from loop 1; $\mathcal{E} - V_1 - V_3 = 0$

$$\mathcal{E} = V_1 + V_2 = 26.6 + 21.7 = 48.3\ V$$

$$\mathcal{E} = 48.3\ V$$