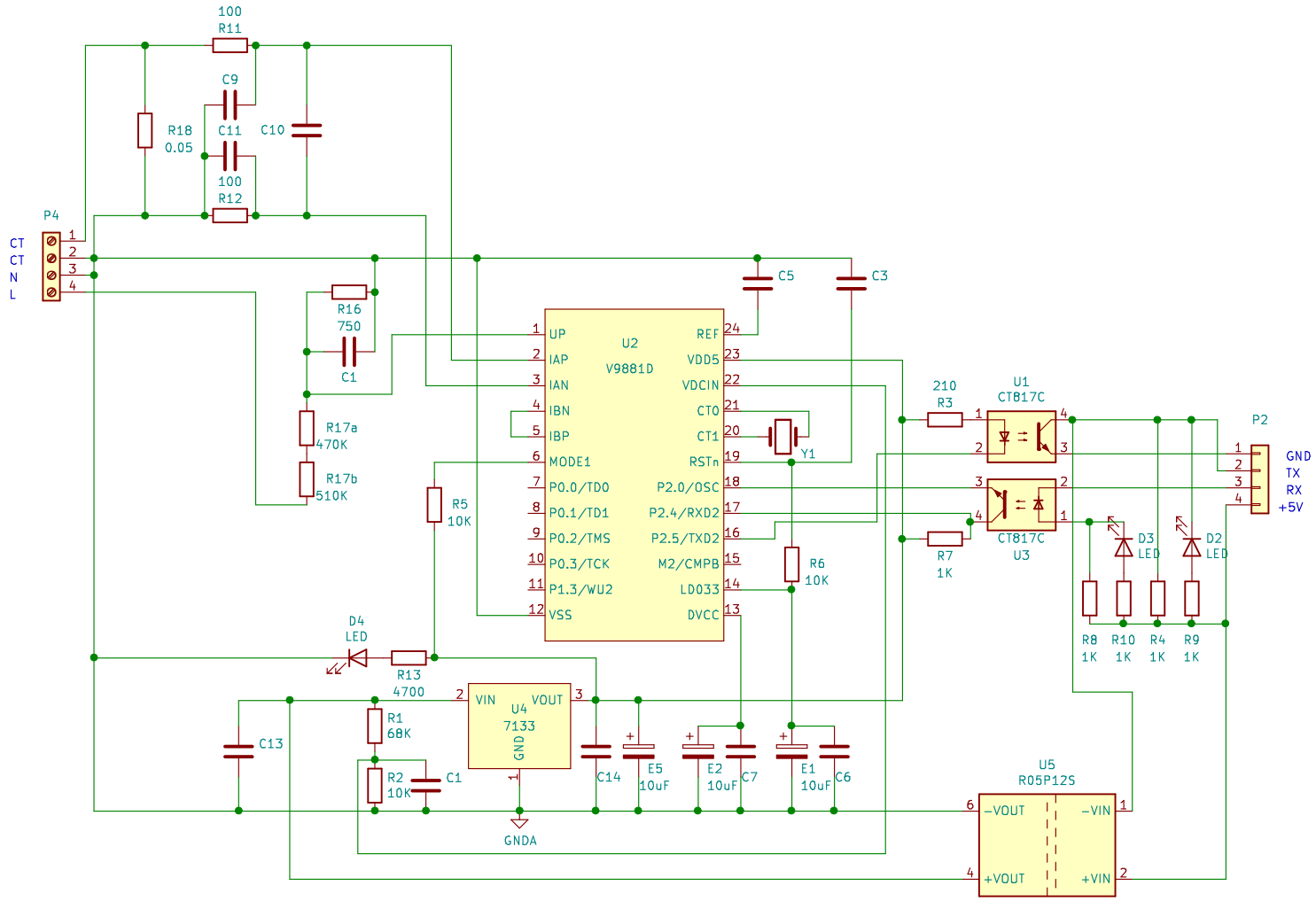

theHWcave

Sheet: /

File: PZEM-004T-option 2.sch

Title: PZEM-004T option 2 (measure from 0v & USB powered)

Size: A4	Date: 20-Mar-2021	**Rev: 0**
KiCad E.D.A. eeschema 5.1.6-c6e7f7d87ubuntu18.04.1		Id: 1/1