Content Indexing

PDF
Number of pages

01.Index ------1
02.Change List ------2
03.Block Diagram ------3
04.Power tree-RK805-1 ------4
05.System Power-PMIC RK805-1 ------5
06.RK3328 Power ------6
07.RK3328 OSC/PLL/OTP/SARADC ------7
08.RK3328 DDR Controler ------8
09.RK3328 eMMC Controler/TF/SPI ------9
10.RK3328 USB2 PHY/USB3 PHY ------10
11.RK3328 SDIO/UART/I2C/I2S/IR ------11
12.RK3328 HDMI PHY ------12
13.RK3328 AV Interface ------13
14.RK3328 FEPHY ------14
15.RAM DDR4 2x16bit ------15
16.DC_IN/RECOWER ------16
17.TF/SD Card/AT18 ------17
18.Flash-eMMC ------18
19.USB Port ------19
20.HDMI OUT Port ------20
21.AV OUT Port ------21
22.10/100M-Embed PHY ------22
23.WIFI+BT_1T1R ------23
24.Connector ------24

Note：
Component parameter description
1. DNP stands for component not mounted temporarily
2. If Value or option is DNP, which means the area is reserved without being mounted

www.t-firefly.com

Title: <Title>	
File: <Doc>	REV: <Revcode>
Create Date: Thursday, March 09, 2017	Page Num: 1
Modify Date: Monday, September 25, 2017	Page Total: 24

PDF created with pdfFactory Pro trial version www.pdffactory.com

Version	Date	Author	Change Note	Approved
V00	20170925	LZZ	First edictor	

PDF created with pdfFactory Pro trial version www.pdffactory.com

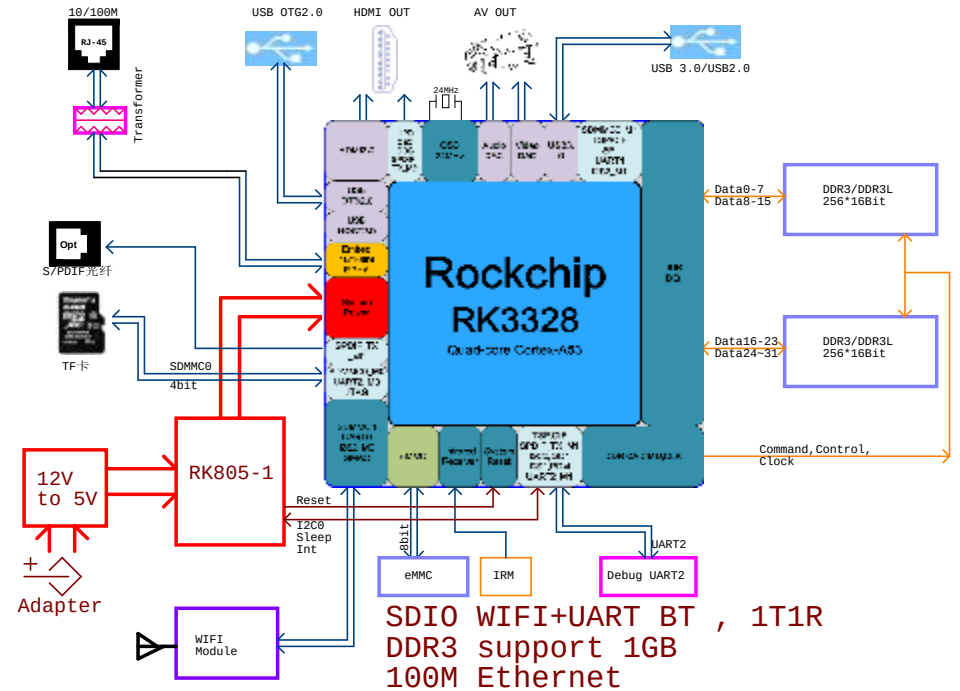

SDIO WIFI+UART BT , 1T1R
DDR3 support 1GB
100M Ethernet

Default config

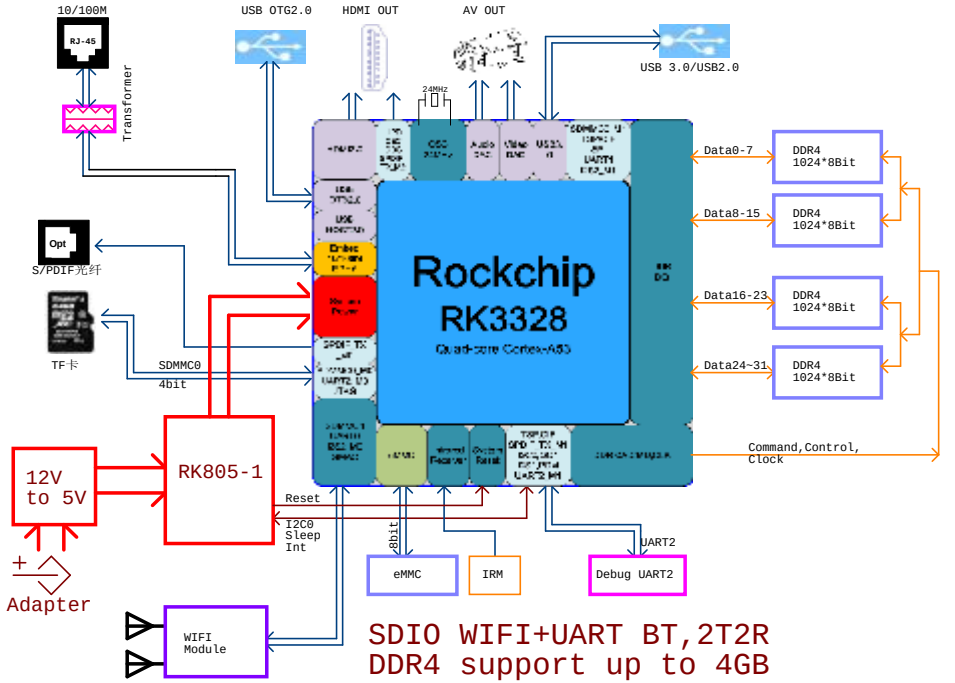

SDIO WIFI+UART BT,2T2R
DDR4 support up to 4GB
100M Ethernet

Config4

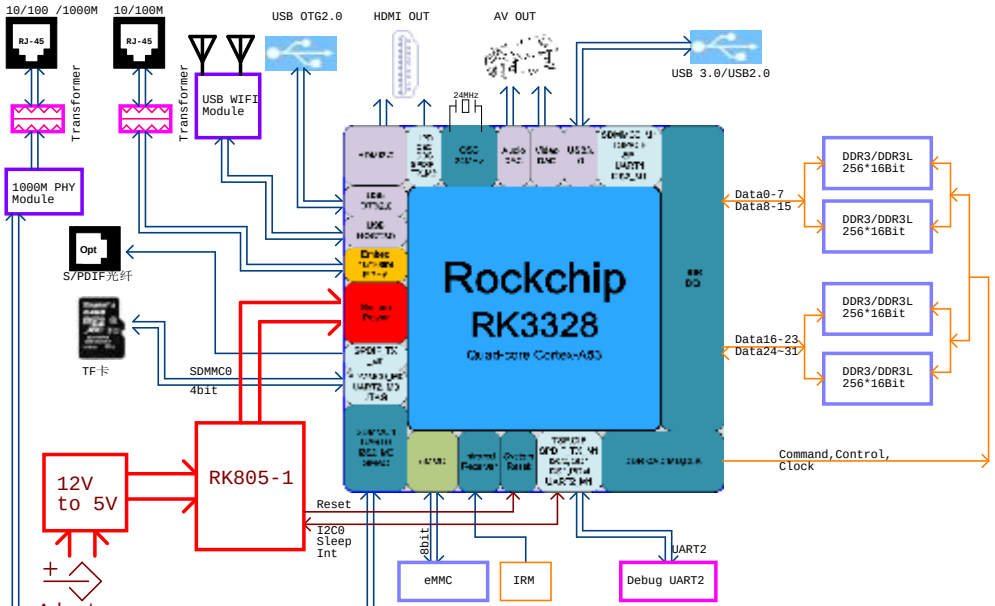

USB WIFI/BT ,
DDR3 support up to 2GB
100M+1000M Ethernet

Config2

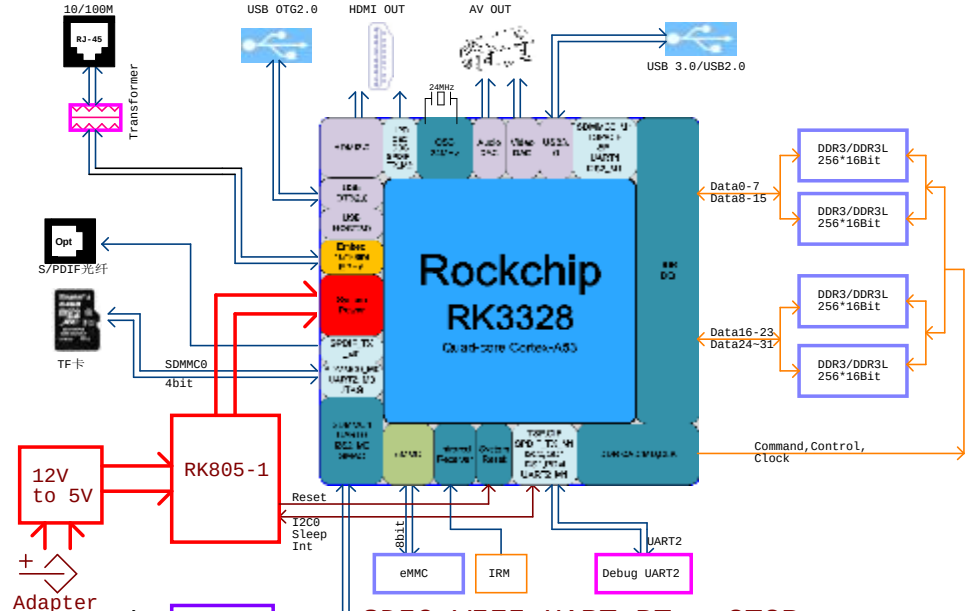

SDIO WIFI+UART BT , 2T2R
DDR3 support up to 2GB
100M Ethernet

Config3

www.t-firefly.com

PDF created with pdfFactory Pro trial version www.pdffactory.com

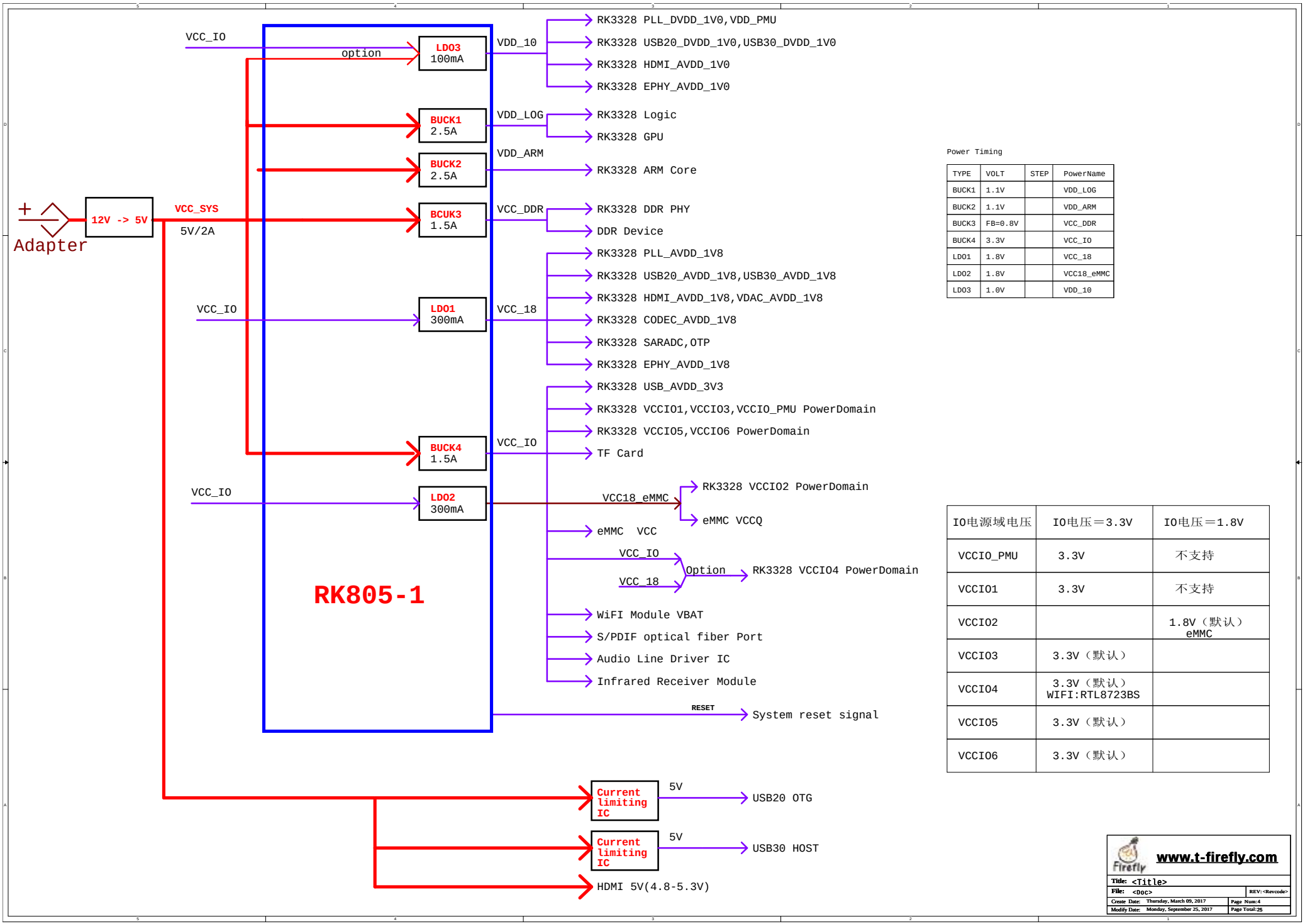

Power Timing

TYPE	VOLT	STEP	PowerName
BUCK1	1.1V		VDD_LOG
BUCK2	1.1V		VDD_ARM
BUCK3	FB=0.8V		VCC_DDR
BUCK4	3.3V		VCC_IO
LDO1	1.8V		VCC_18
LDO2	1.8V		VCC18_eMMC
LDO3	1.0V		VDD_10

IO电源域电压	IO电压＝3.3V	IO电压＝1.8V
VCCIO_PMU	3.3V	不支持
VCCIO1	3.3V	不支持
VCCIO2		1.8V（默认） eMMC
VCCIO3	3.3V（默认）	
VCCIO4	3.3V（默认） WIFI:RTL8723BS	
VCCIO5	3.3V（默认）	
VCCIO6	3.3V（默认）	

www.t-firefly.com

Title: <Title>	
File: <Doc>	REV: <Revcode>
Create Date: Thursday, March 09, 2017	Page Num:4
Modify Date: Monday, September 25, 2017	Page Total:25

PDF created with pdfFactory Pro trial version www.pdffactory.com

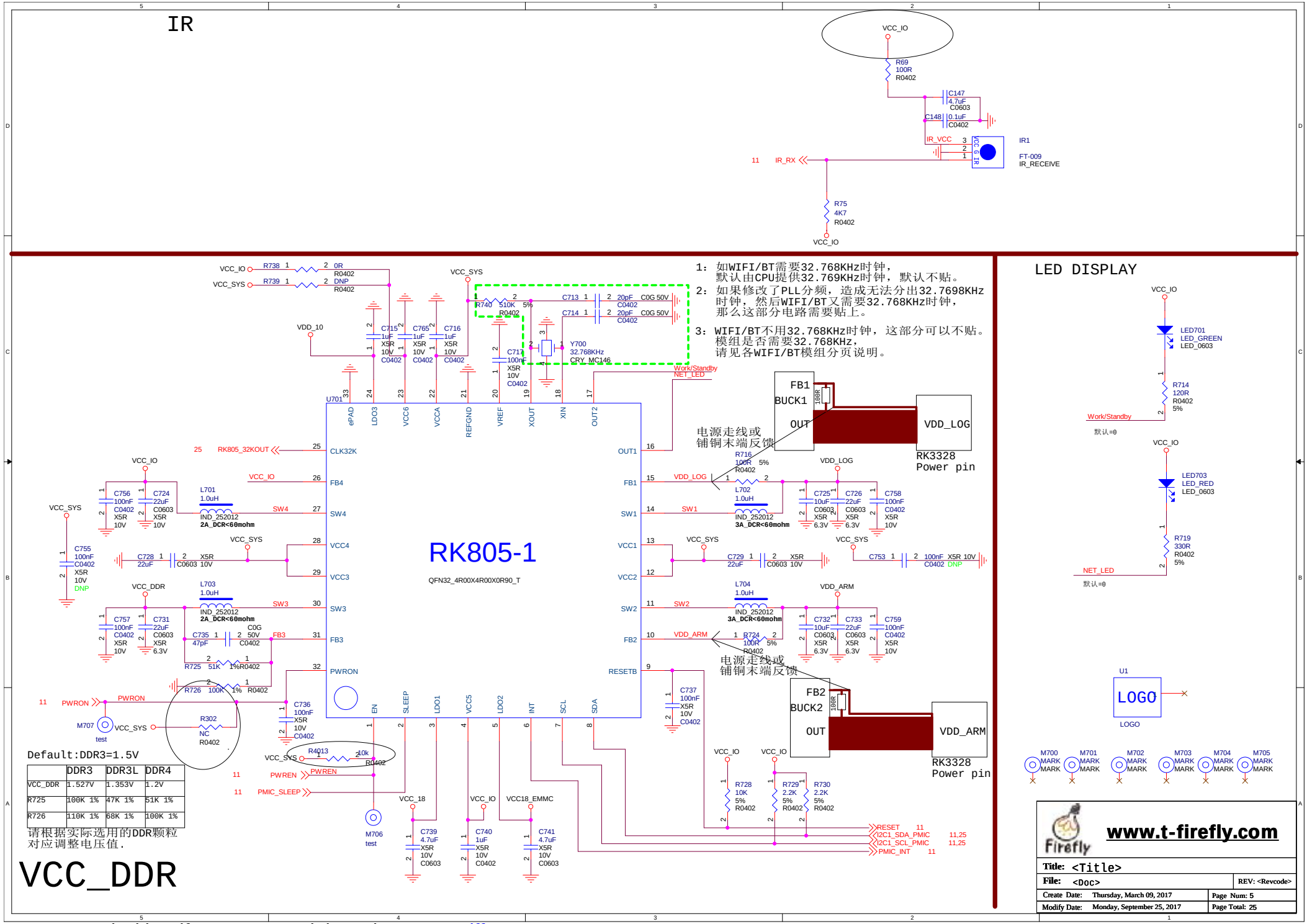

	DDR3	DDR3L	DDR4
VCC_DDR	1.527V	1.353V	1.2V
R725	100K 1%	47K 1%	51K 1%
R726	110K 1%	68K 1%	100K 1%

PDF created with pdfFactory Pro trial version www.pdffactory.com

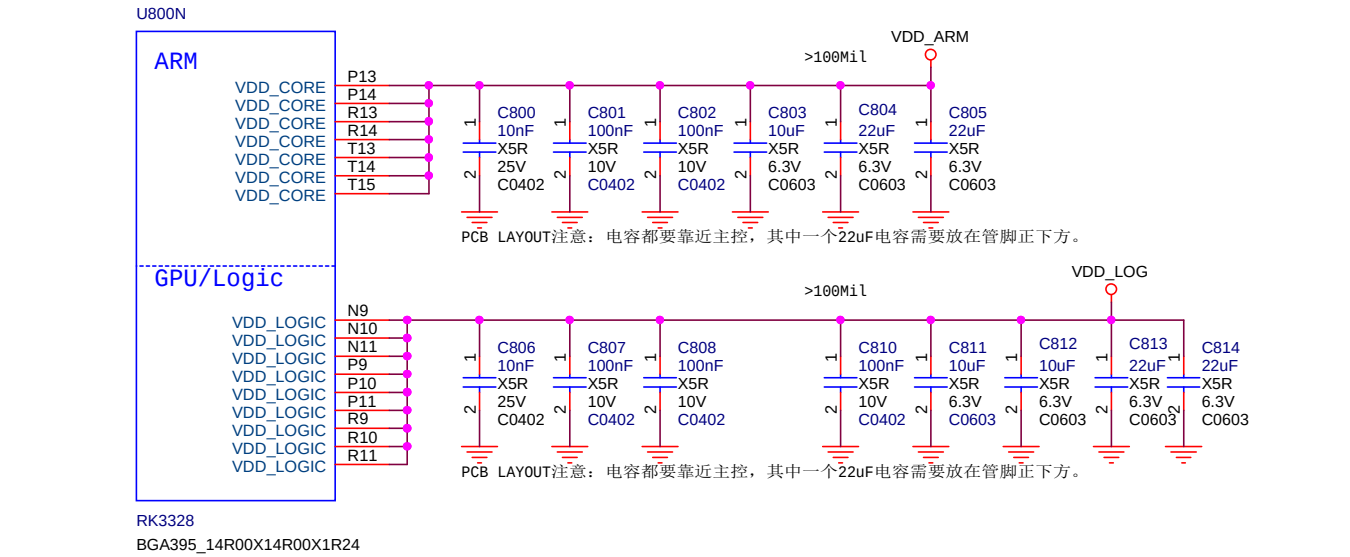

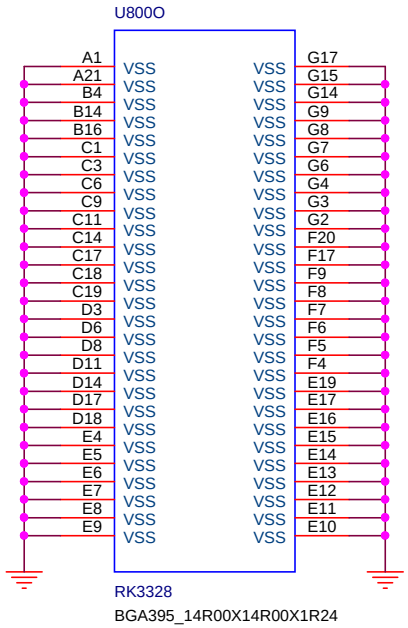

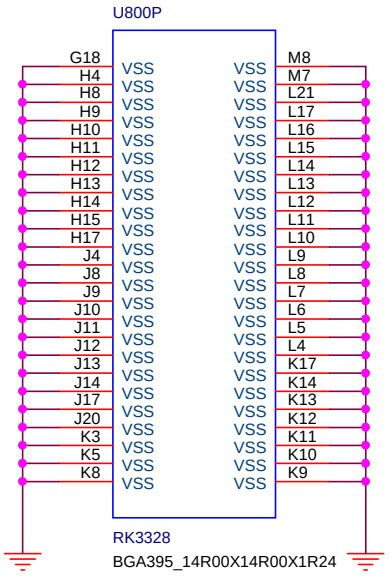

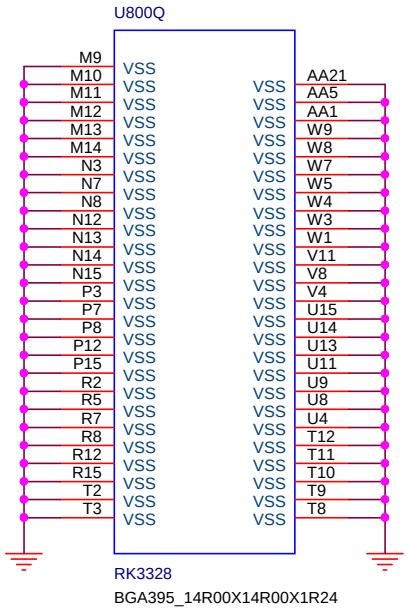

www.t-firefly.com

Title: <Title>	
File: <Doc>	REV: <Revcode>
Create Date: Thursday, March 09, 2017	Page Num: 6
Modify Date: Monday, September 25, 2017	Page Total: 25

PDF created with pdfFactory Pro trial version www.pdffactory.com

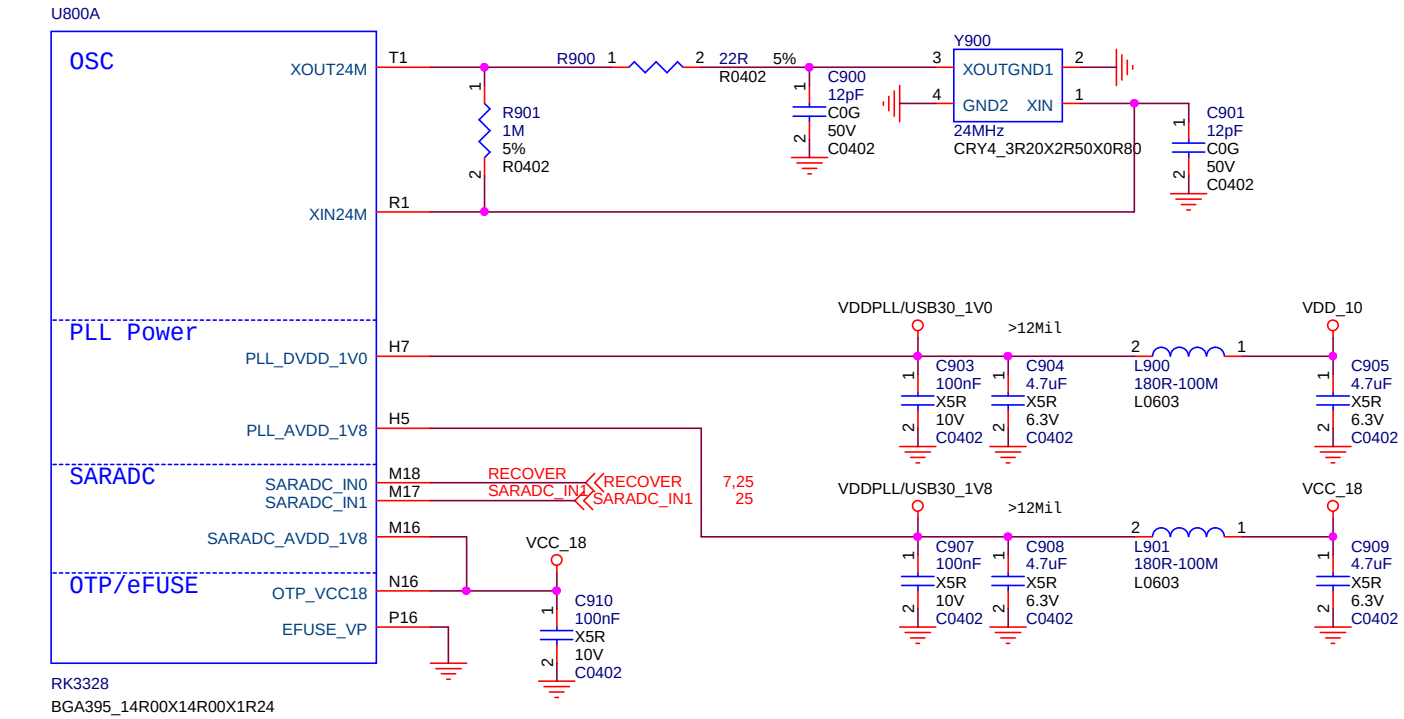

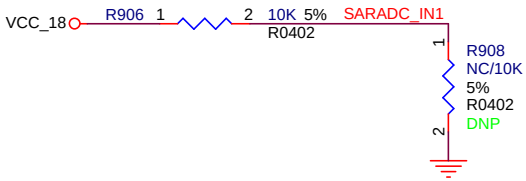

SARADC_IN0 BOM版本	SARADC_IN1 PCB版本	Up阻值	Down阻值	
Recover		DNP	10K	
BOM1		110K	10K	
BOM2		100K	20K	
BOM3		100K	33K	
BOM4		36K	18K	
BOM5		51K	36K	
BOM6		51K	51K	
BOM7		36K	51K	
BOM8		18K	36K	
BOM9		33K	100K	
BOM10		20K	100K	
BOM11		10K	110K	
BOM12		10K	DNP	

Firefly **www.t-firefly.com**

Title: <Title>		
File: <Doc>		REV: <Revcode>
Create Date: Thursday, March 09, 2017		Page Num: 7
Modify Date: Monday, September 25, 2017		Page Total: 25

PDF created with pdfFactory Pro trial version www.pdffactory.com

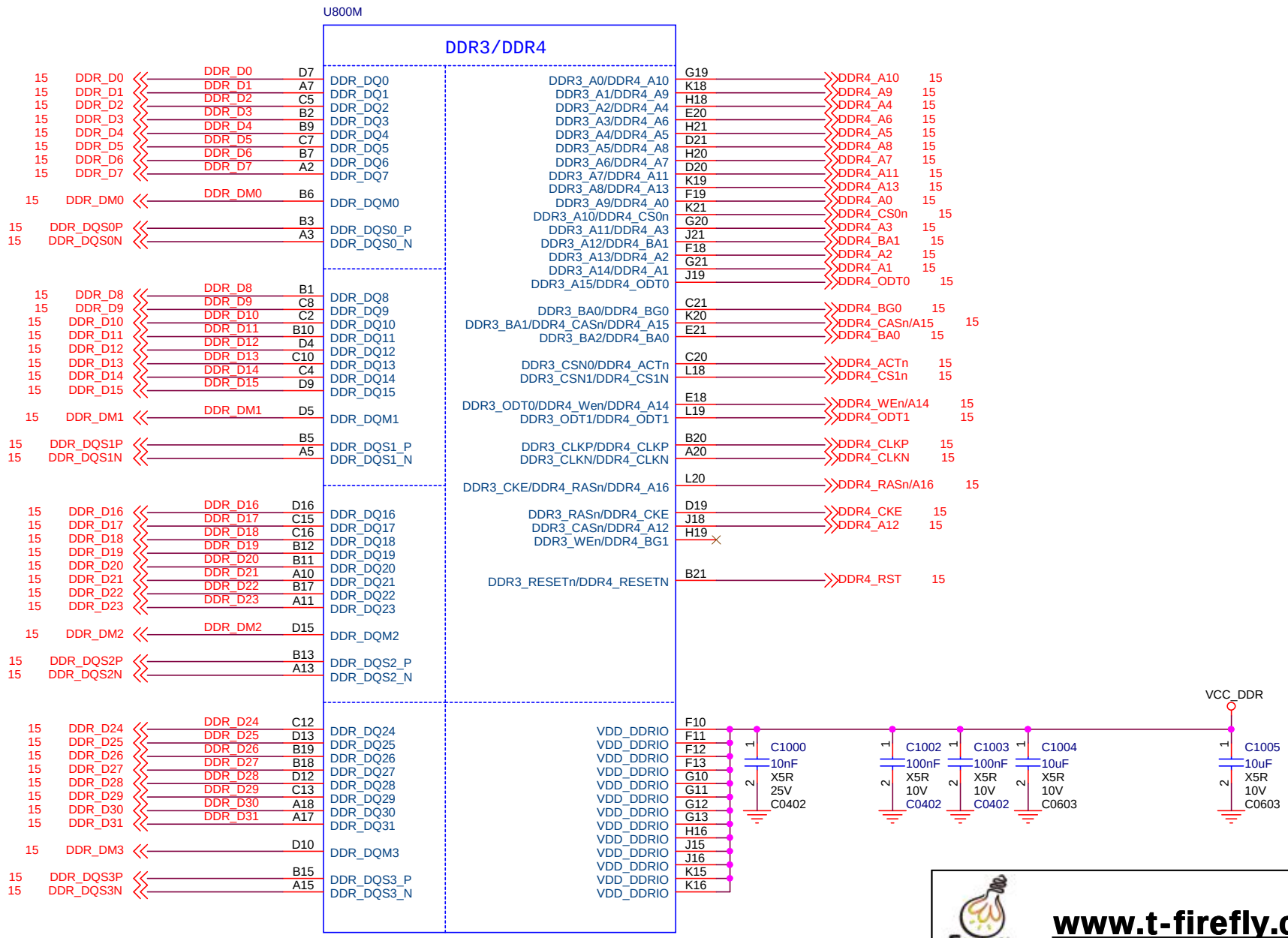

PDF created with pdfFactory Pro trial version www.pdffactory.com

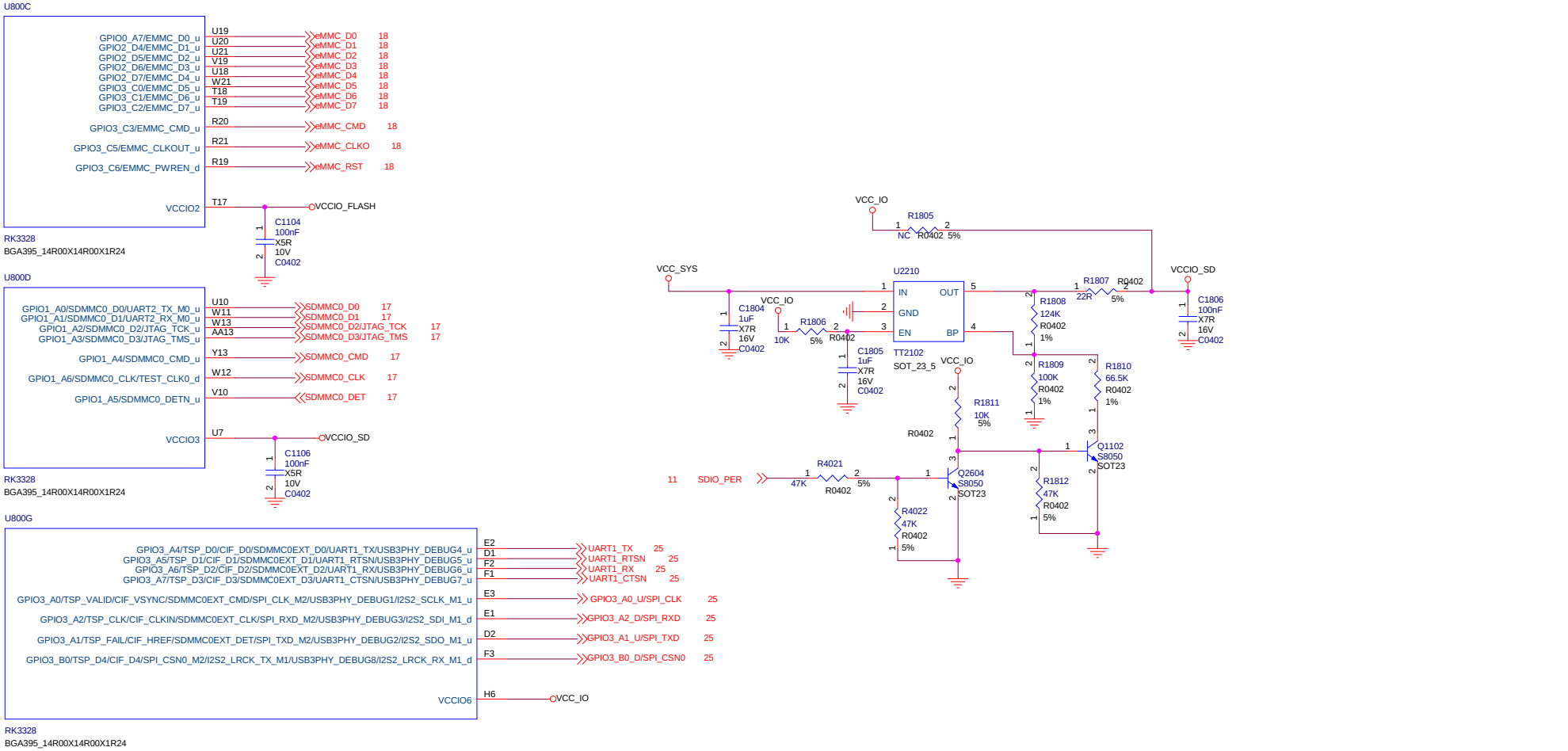

Title: <Title>		
File: <Doc>		REV: <Revcode>
Create Date: Thursday, March 09, 2017		Page Num: 9
Modify Date: Monday, September 25, 2017		Page Total: 25

www.t-firefly.com

PDF created with pdfFactory Pro trial version www.pdffactory.com

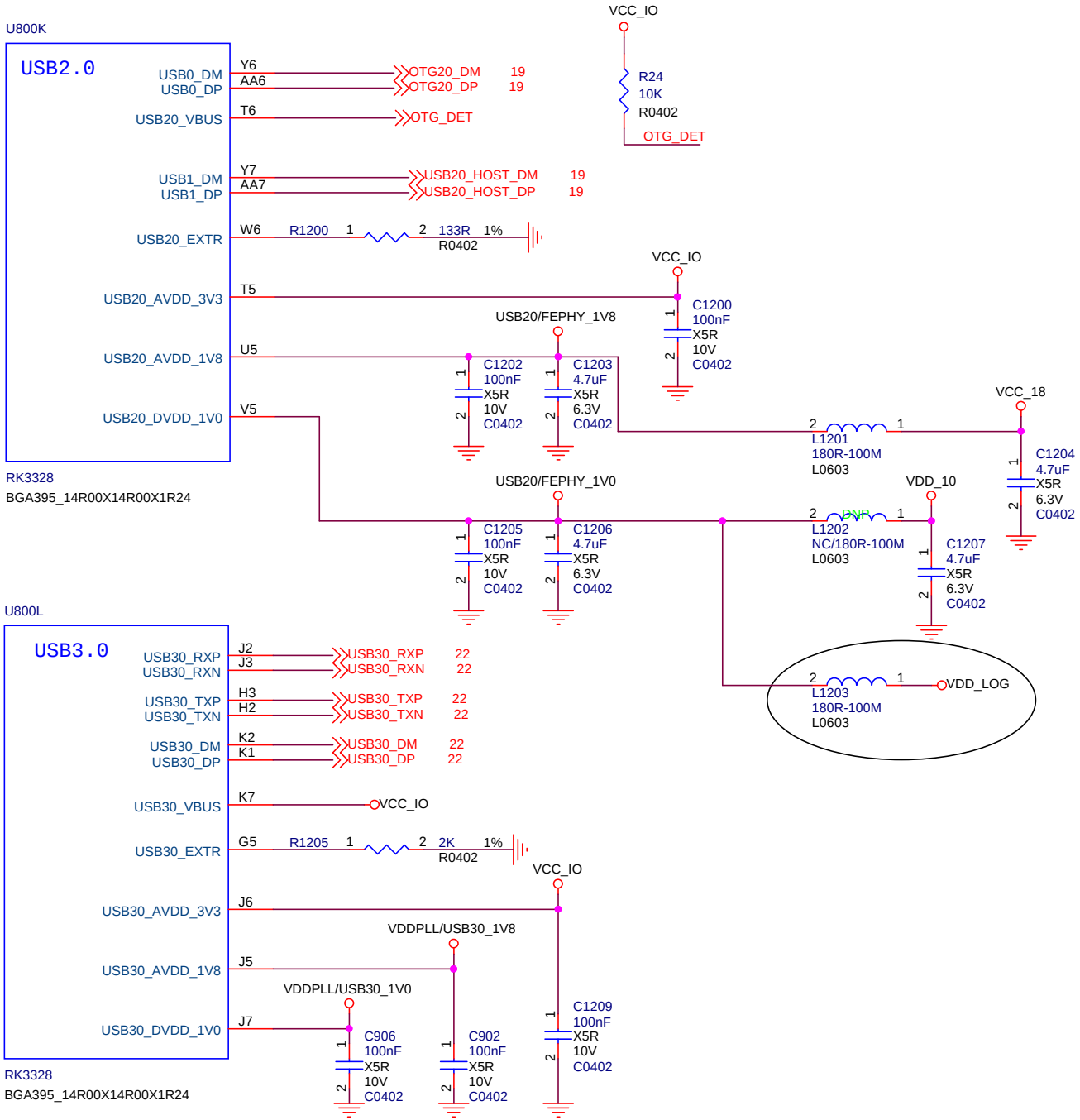

www.t-firefly.com

Title: <Title>	
File: <Doc>	REV: <Revcode>
Create Date: Thursday, March 09, 2017	Page Num: 10
Modify Date: Monday, September 25, 2017	Page Total: 25

PDF created with pdfFactory Pro trial version www.pdffactory.com

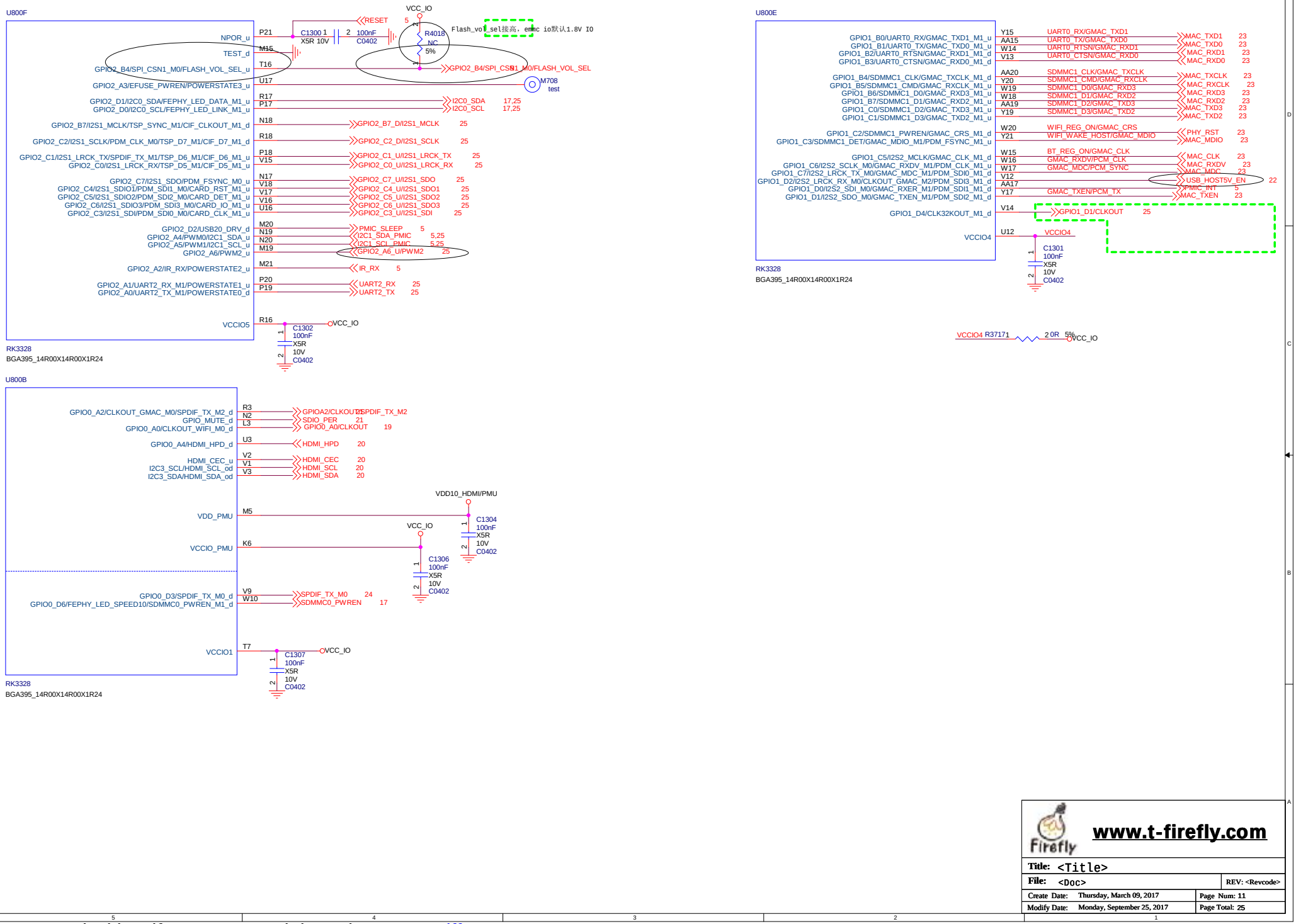

PDF created with pdfFactory Pro trial version www.pdffactory.com

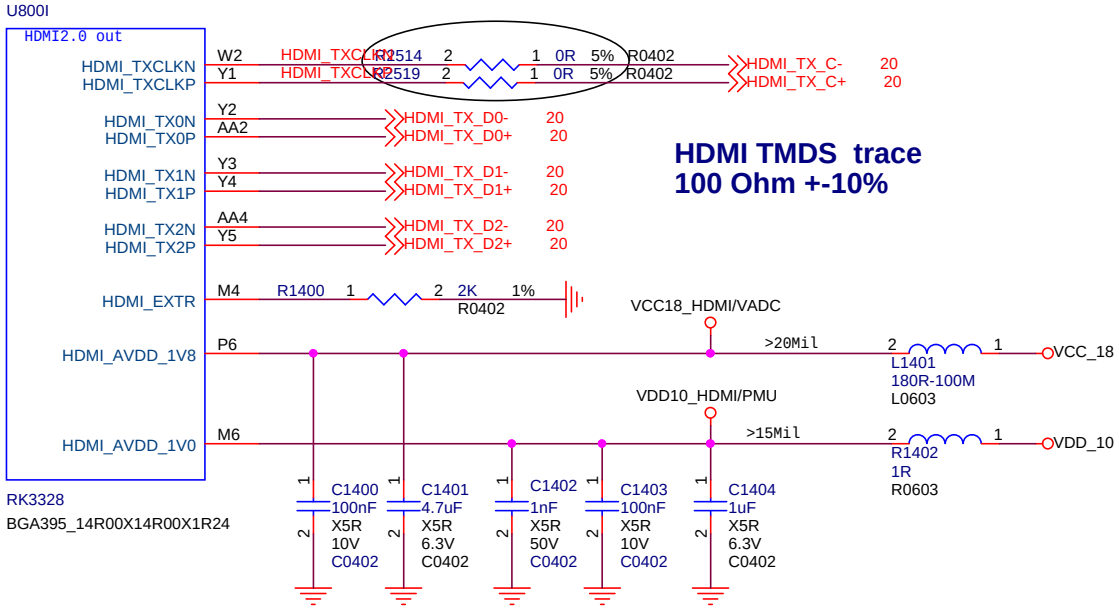

HDMI TMDS trace
100 Ohm +-10%

www.t-firefly.com

Title: <Title>	
File: <Doc>	REV: <Revcode>
Create Date: Thursday, March 09, 2017	Page Num: 12
Modify Date: Monday, September 25, 2017	Page Total: 25

PDF created with pdfFactory Pro trial version www.pdffactory.com

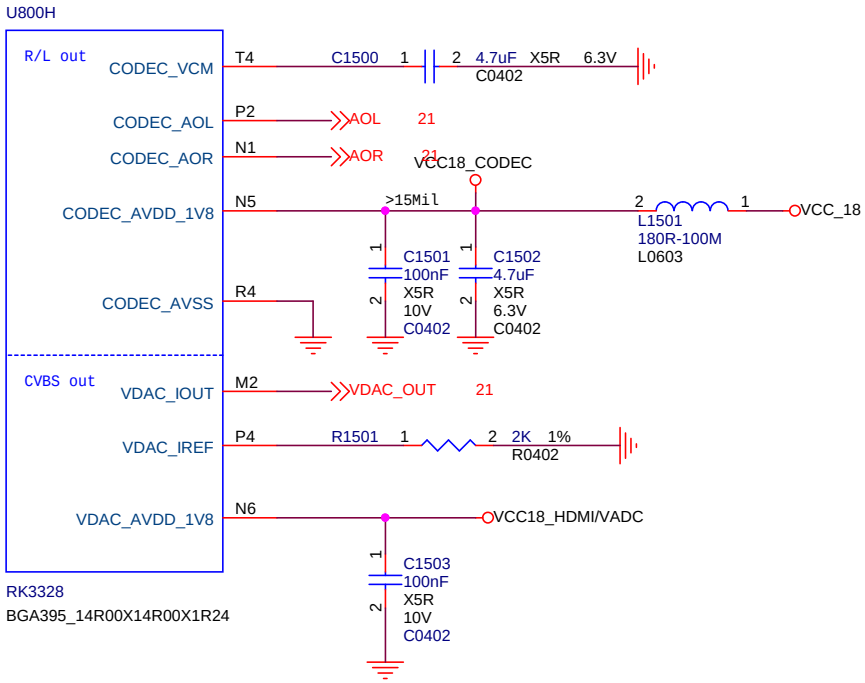

www.t-firefly.com

Title: <Title>	
File: <Doc>	REV: <Revcode>
Create Date: Thursday, March 09, 2017	Page Num: 13
Modify Date: Monday, September 25, 2017	Page Total: 25

PDF created with pdfFactory Pro trial version www.pdffactory.com

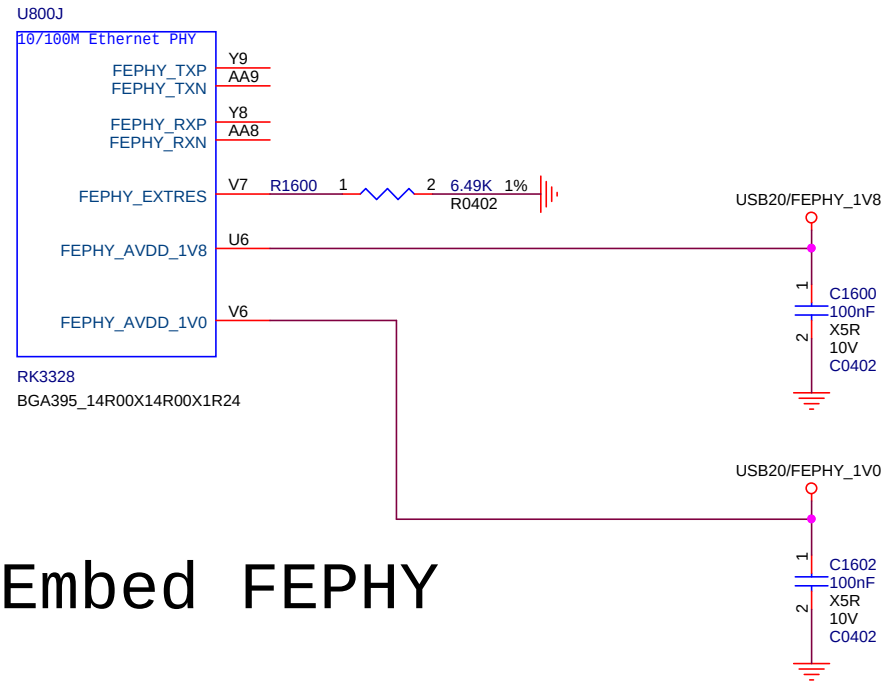

Embed FEPHY

www.t-firefly.com

Title: <Title>	
File: <Doc>	REV: <Revcode>
Create Date: Thursday, March 09, 2017	Page Num: 14
Modify Date: Monday, September 25, 2017	Page Total: 25

PDF created with pdfFactory Pro trial version www.pdffactory.com

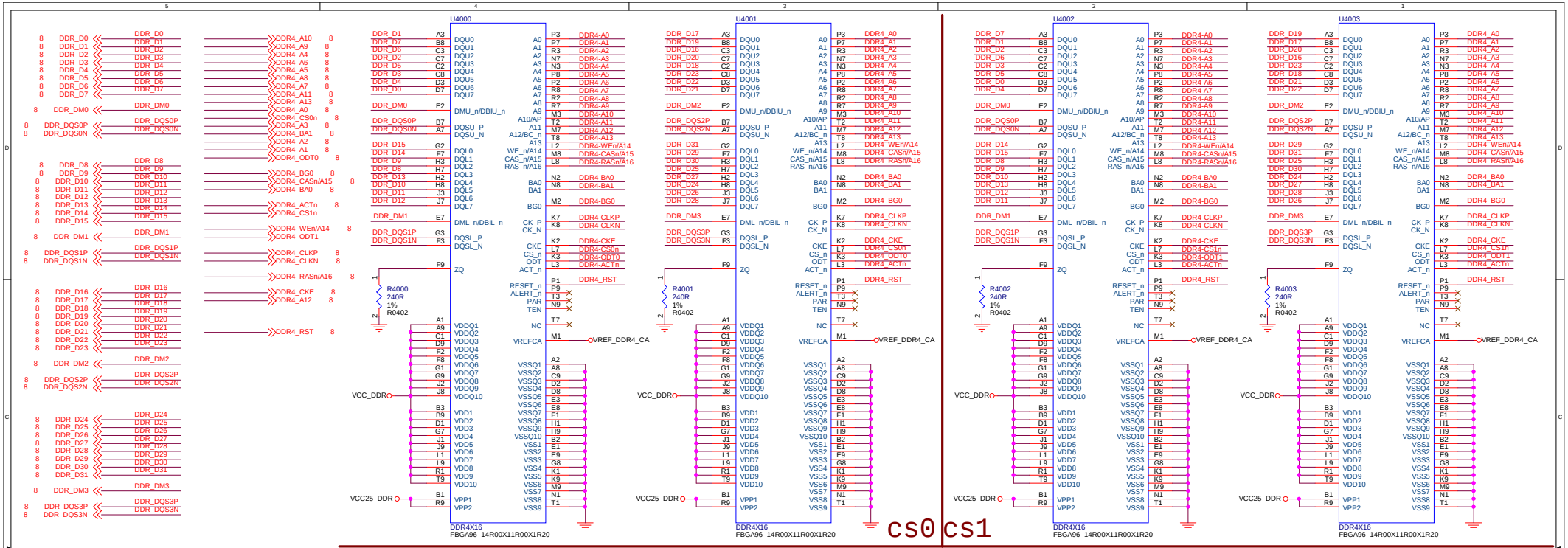

Note: 4X16bit DDR4
颗粒速率>=1866Mb/s

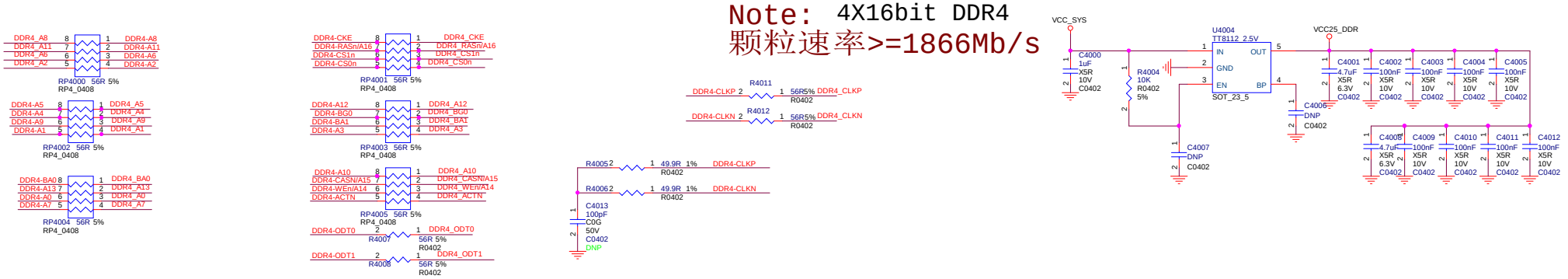

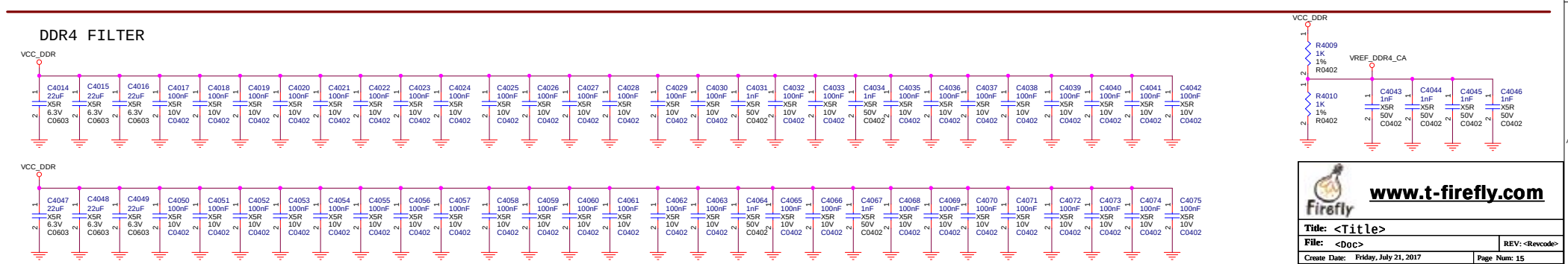

www.t-firefly.com
Title: <Title>
File: <Doc>
REV: <Revcode>
Create Date: Friday, July 21, 2017
Page Num: 15
Modify Date: Monday, September 25, 2017
Page Total: 24

PDF created with pdfFactory Pro trial version www.pdffactory.com

USB 5V

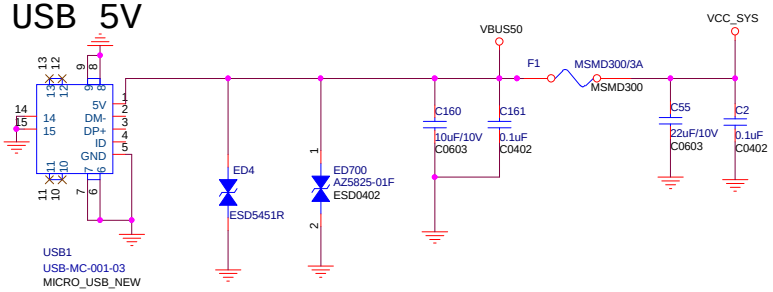

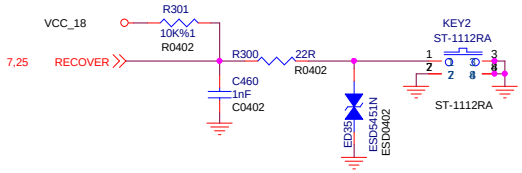

www.t-firefly.com	
Title: <Title>	
File: <Doc>	REV: <Revcode>
Create Date: Saturday, March 18, 2017	Page Num: 16
Modify Date: Monday, September 25, 2017	Page Total: 24

PDF created with pdfFactory Pro trial version www.pdffactory.com

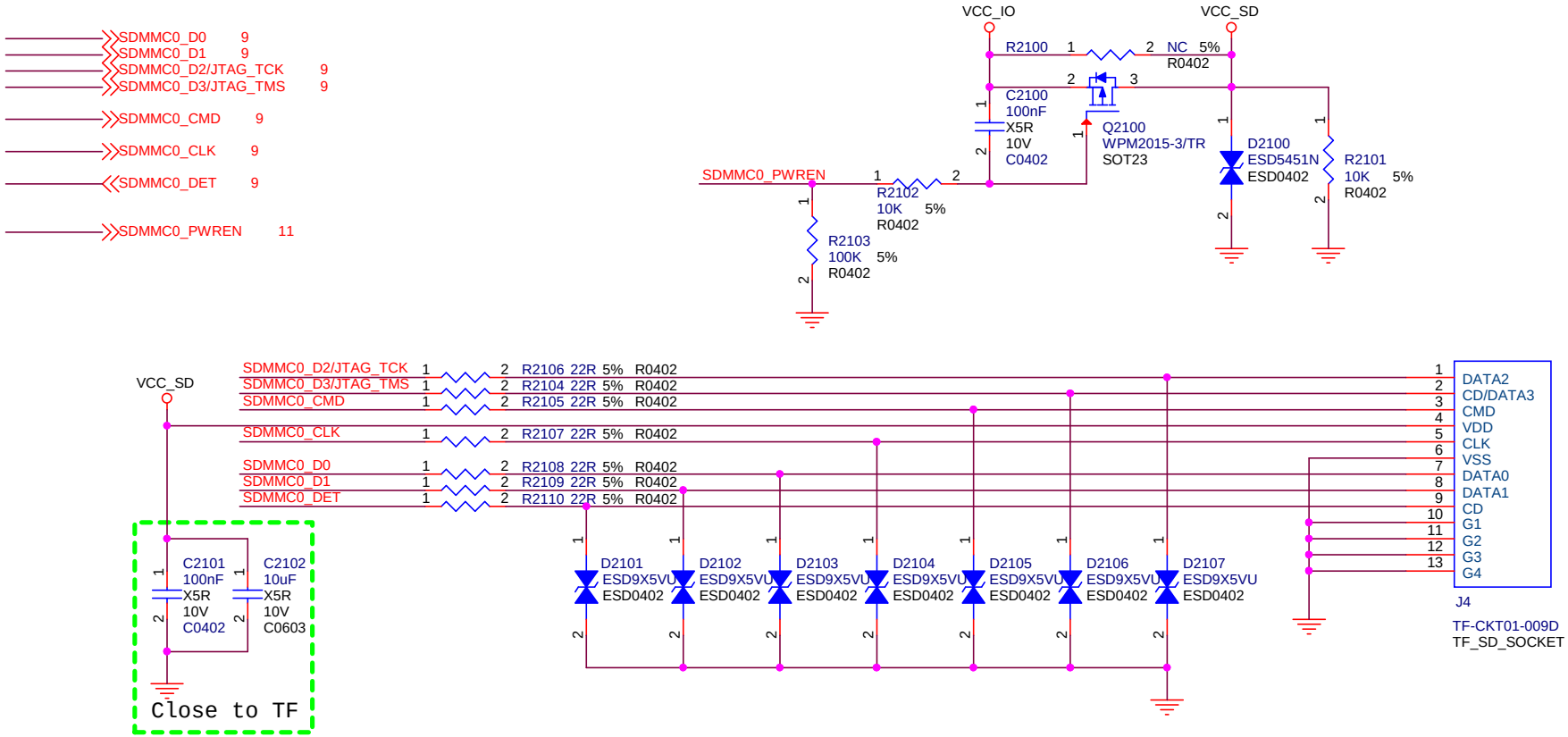

AT18

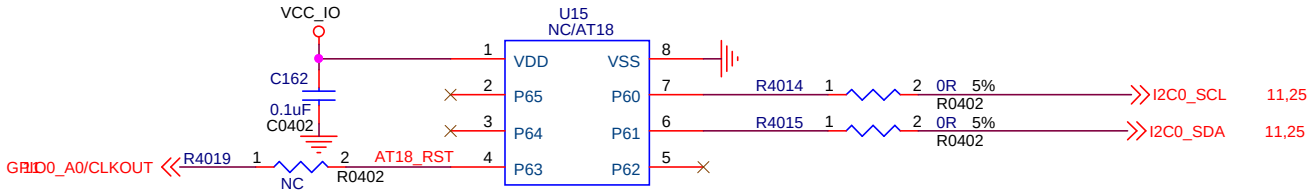

www.t-firefly.com

Title: <Title>	
File: <Doc>	REV: <Revcode>
Create Date: Thursday, March 09, 2017	Page Num: 17
Modify Date: Monday, September 25, 2017	Page Total: 24

PDF created with pdfFactory Pro trial version www.pdffactory.com

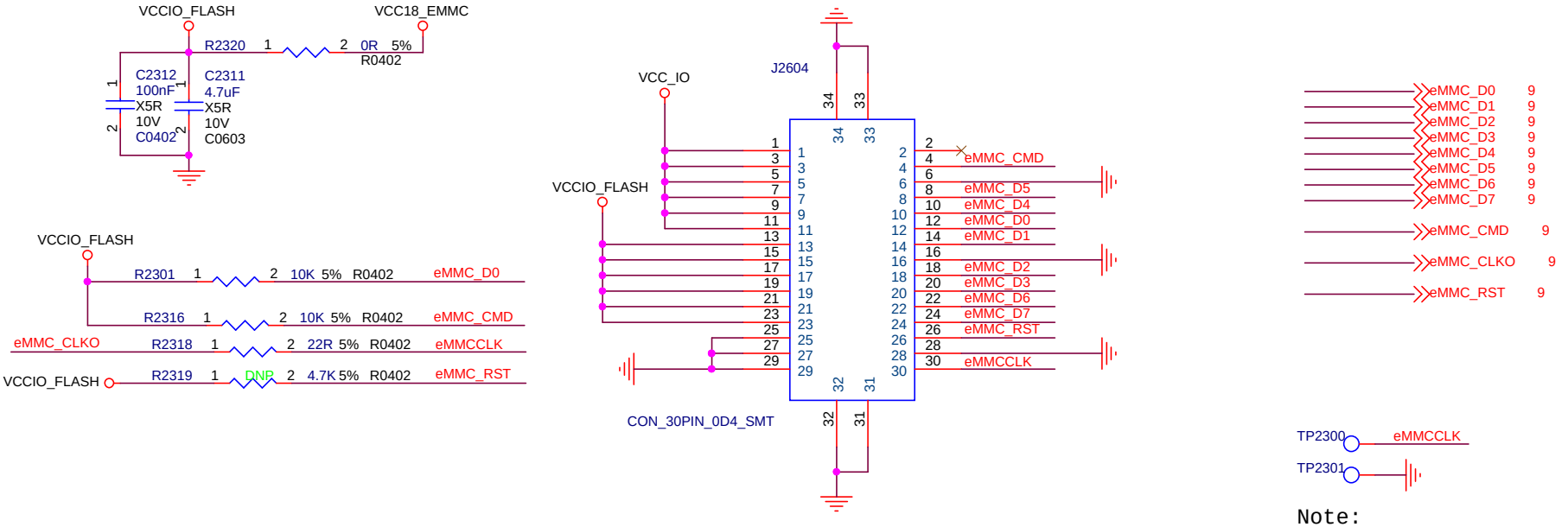

Note:
eMMC Update.

www.t-firefly.com

Title: <Title>		
File: <Doc>		REV: <Revcode>
Create Date: Thursday, March 09, 2017	Page Num: 18	
Modify Date: Monday, September 25, 2017	Page Total: 24	

PDF created with pdfFactory Pro trial version www.pdffactory.com

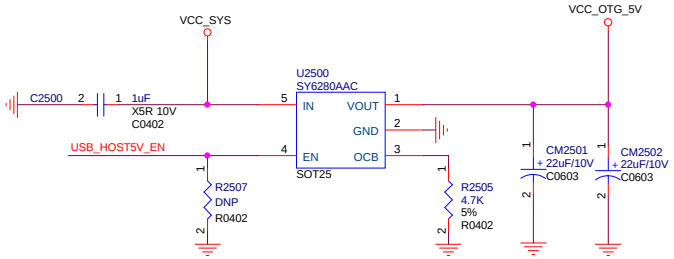

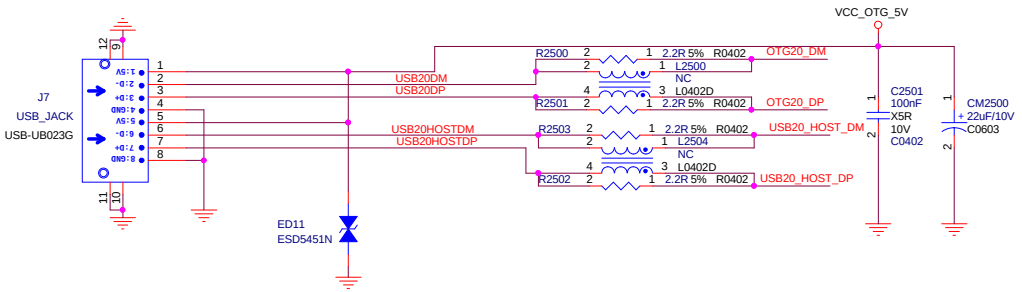

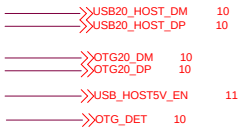

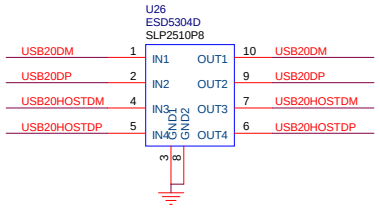

www.t-firefly.com

Title: <Title>	
File: <Doc>	REV: <Revcode>
Create Date: Thursday, March 09, 2017	Page Num: 19
Modify Date: Monday, September 25, 2017	Page Total: 24

PDF created with pdfFactory Pro trial version www.pdffactory.com

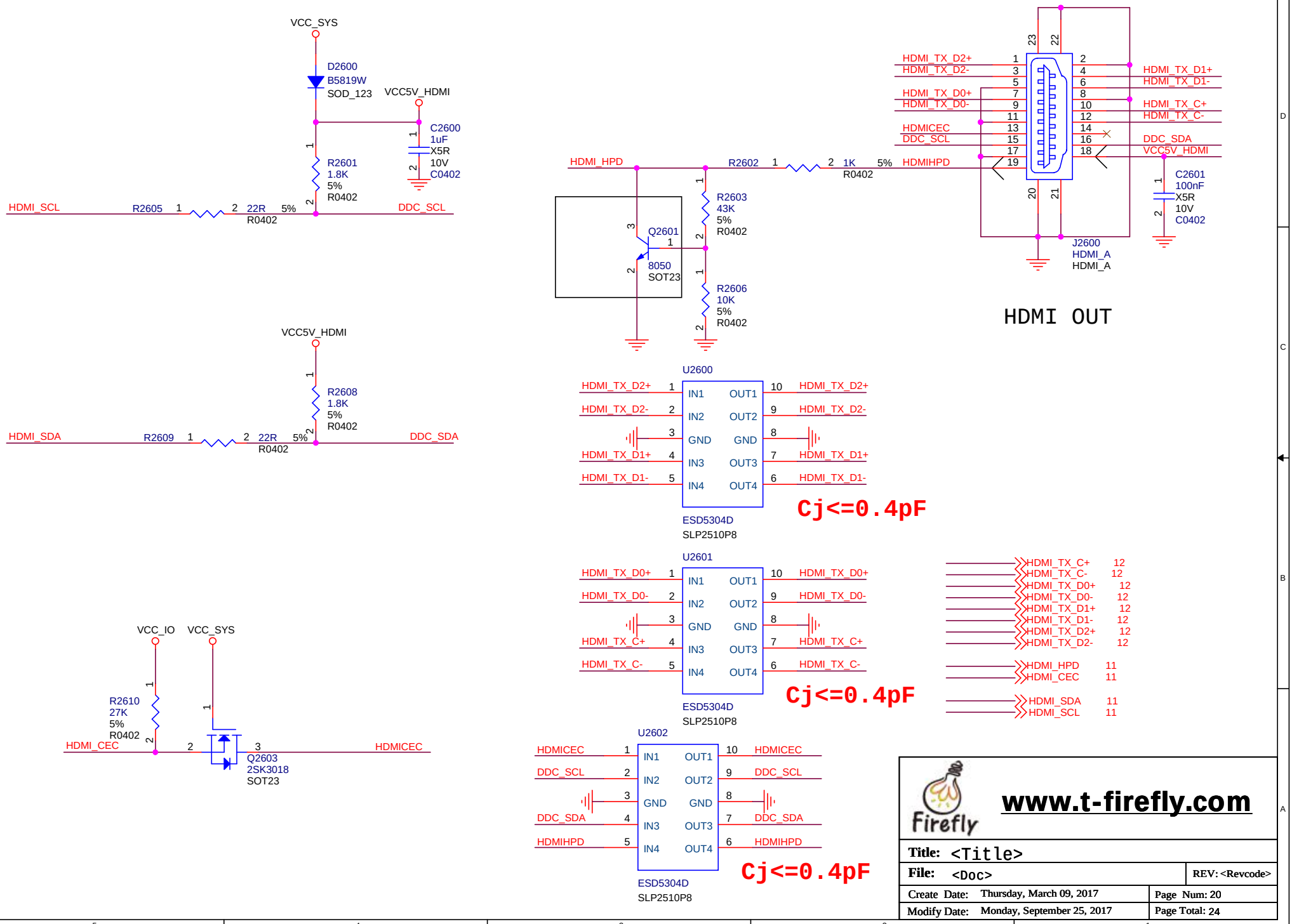

PDF created with pdfFactory Pro trial version www.pdffactory.com

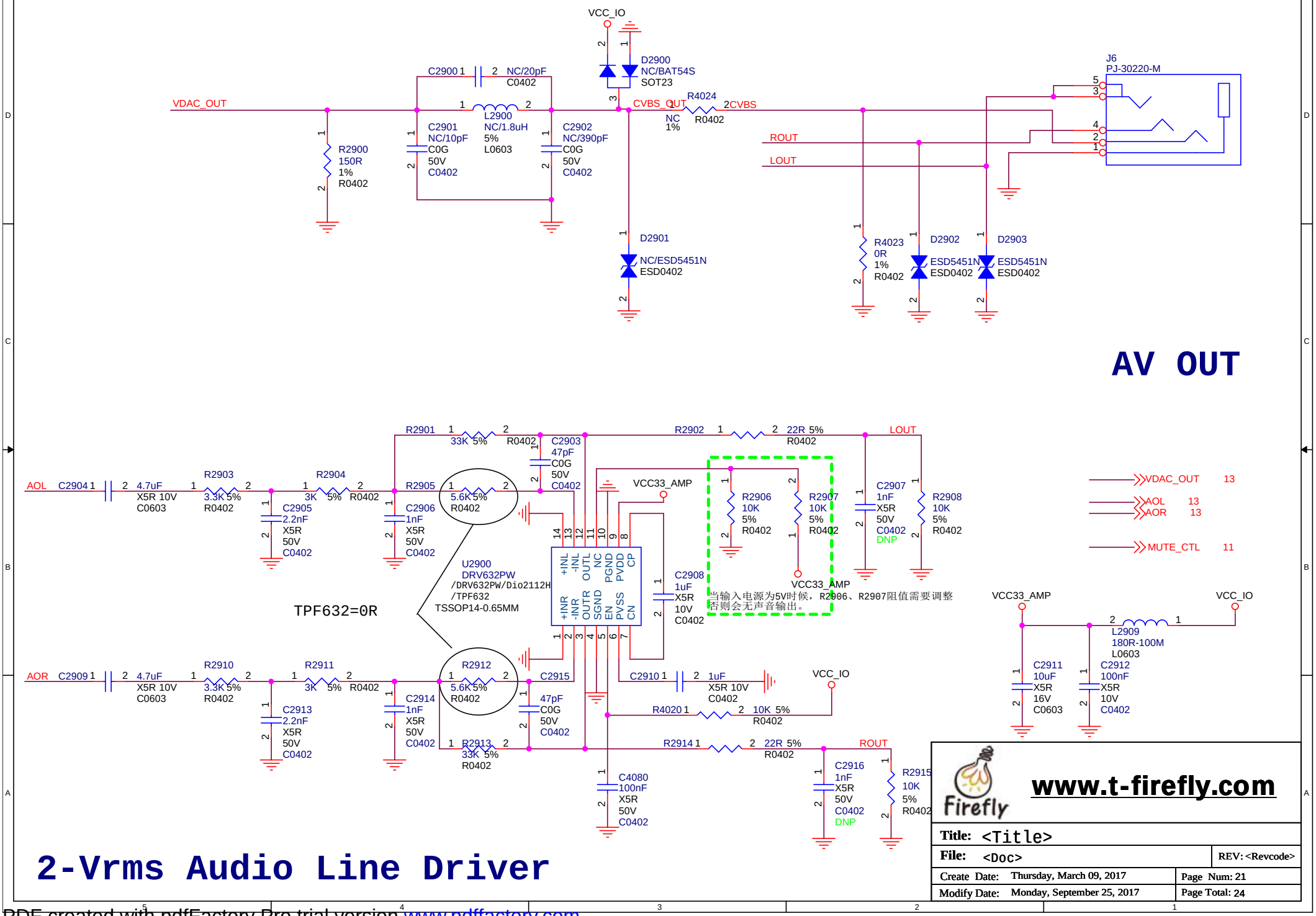

PDF created with pdfFactory Pro trial version www.pdffactory.com

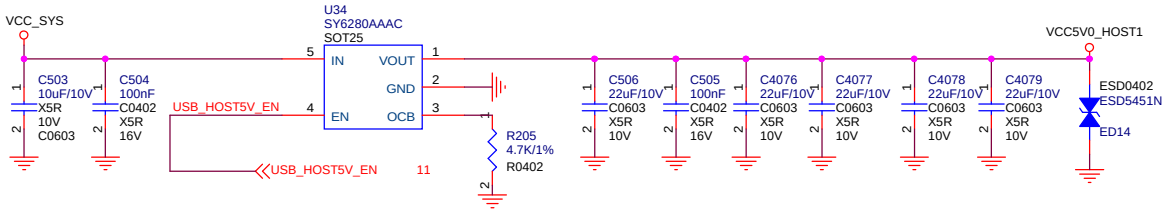

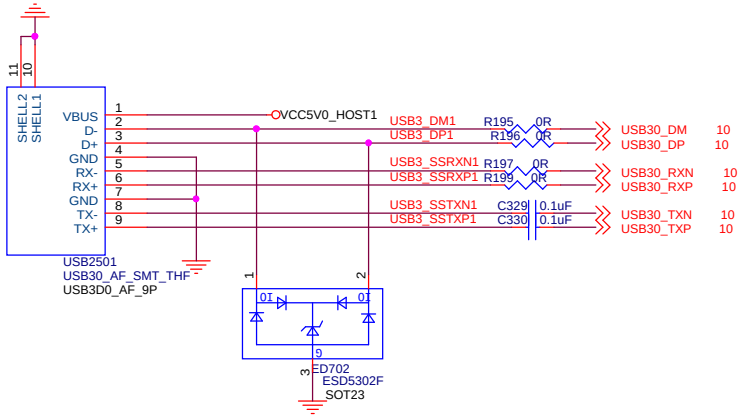

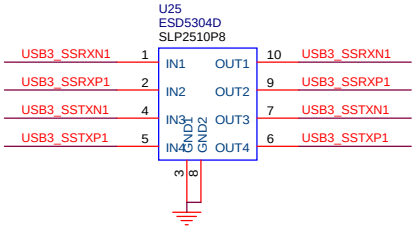

www.t-firefly.com

Title: <Title>	
File: <Doc>	REV: <Revcode>
Create Date: Tuesday, May 16, 2017	Page Num: 22
Modify Date: Monday, September 25, 2017	Page Total: 24

PDF created with pdfFactory Pro trial version www.pdffactory.com

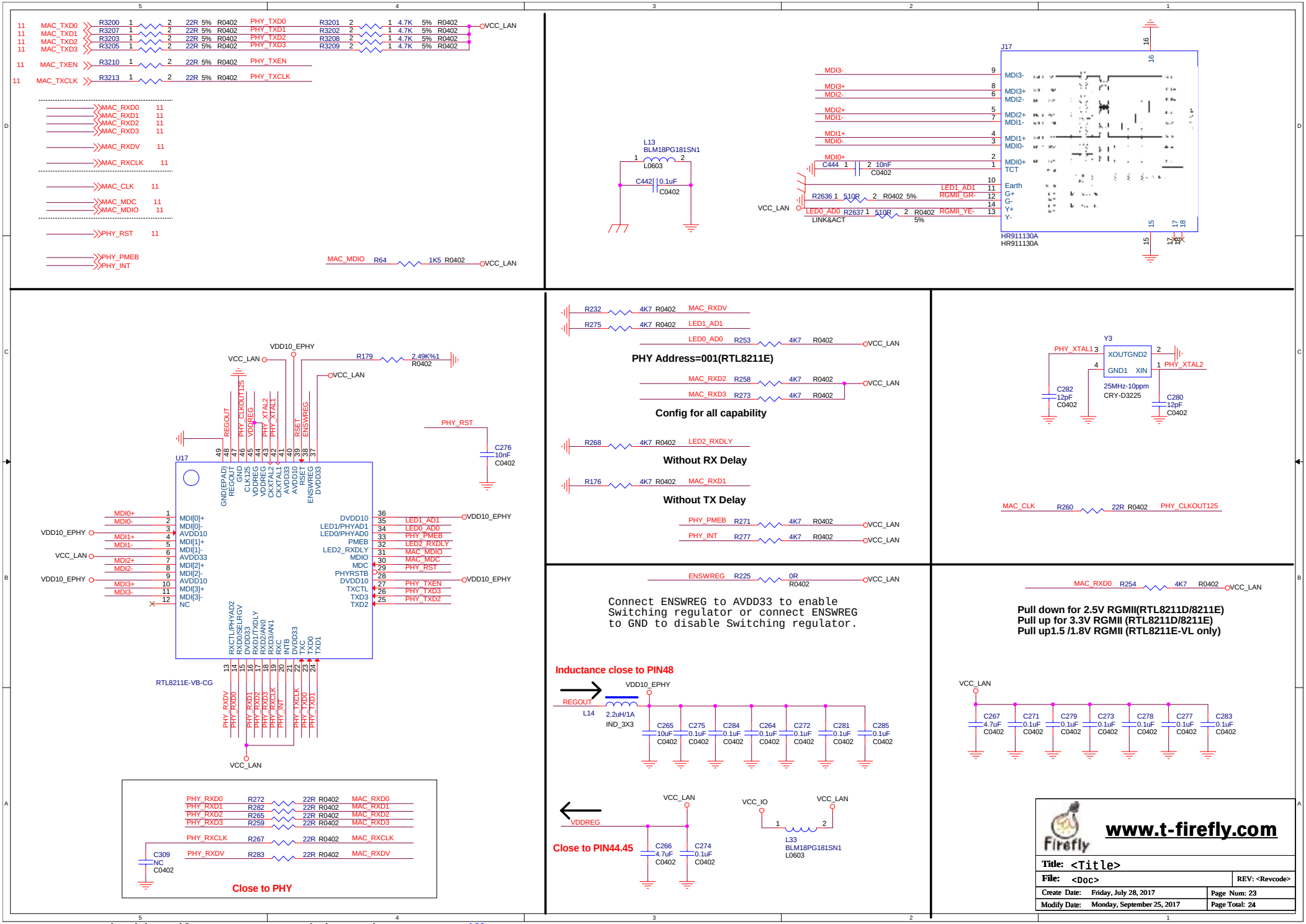

PDF created with pdfFactory Pro trial version www.pdffactory.com

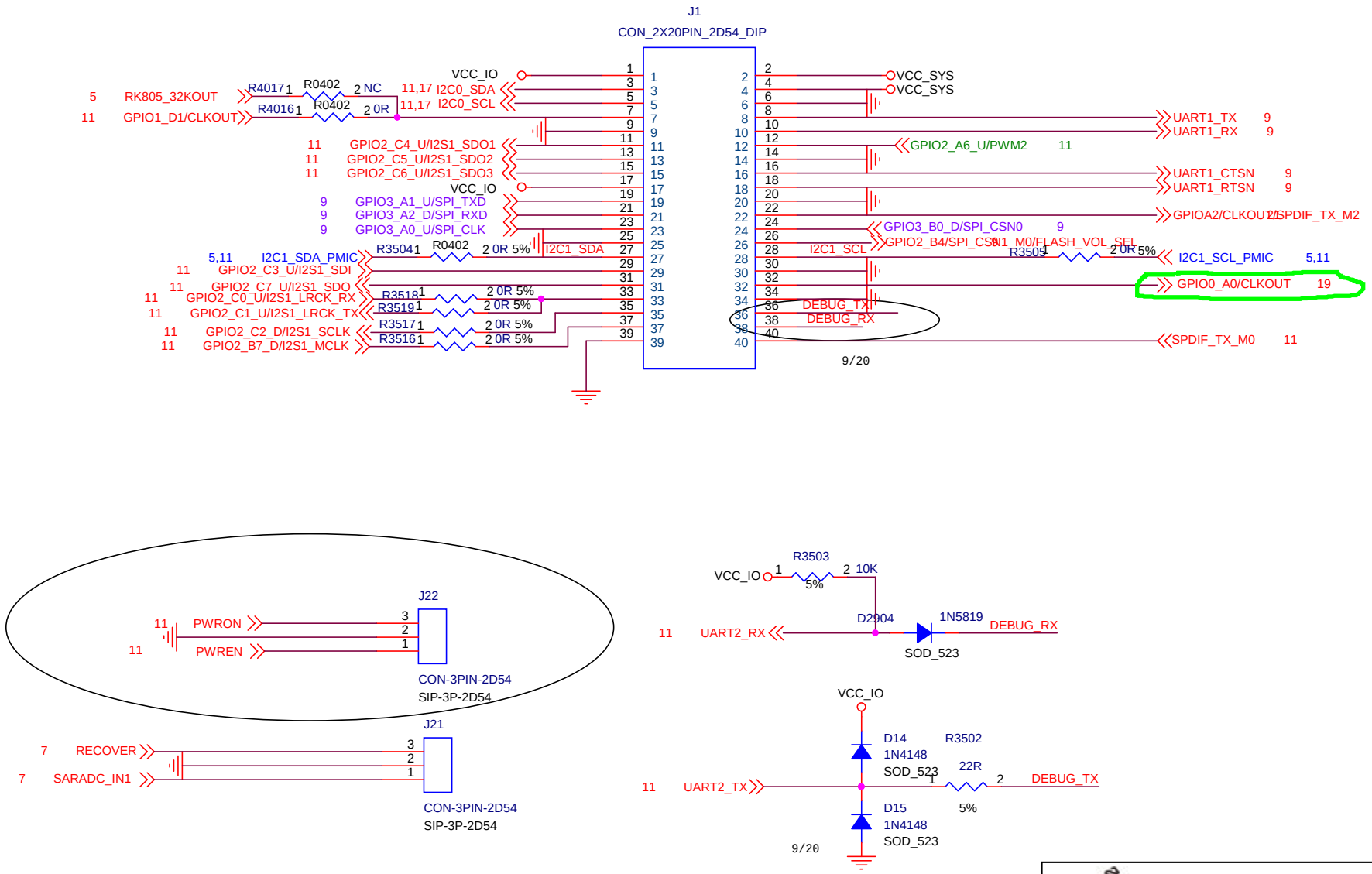

Firefly

www.t-firefly.com

Title: <Title>		
File: <Doc>		REV: <Revcode>
Create Date: Friday, March 17, 2017		Page Num: 24
Modify Date: Friday, September 29, 2017		Page Total: 24

PDF created with pdfFactory Pro trial version www.pdffactory.com