5147366-TTG-O-0120

TEMPMASTER®

TECHNICAL GUIDE

XYE/XXE/XQE SERIES
3 - 10 TON
60 HERTZ

SMART EQUIPMENT™

C US

AHRI CERTIFIED™ www.ahridirectory.org Unitary Large HP AHRI Standard 340/360

AHRI CERTIFIED™ www.ahridirectory.org Unitary Small HP AHRI Standard 210/240

FOR DISTRIBUTION USE ONLY - NOT TO BE USED AT POINT OF RETAIL SALE

Table of Contents

Table of Contents 2
Component Location 3
Factory Installed Options 6
Field Installed Accessories 8
Nomenclature 9
AHRI Cooling Rating Table 12
AHRI 270 Outdoor Sound Power Levels 12
Physical Data 13
Capacity Performance 20
Airflow Performance 62
Power Exhaust Blower Curves 76
Electrical Data 77
Typical Wiring Diagrams 129
Weights and Dimensions 147
Economizer Options 156
Guide Specifications 159

Product Highlights

- Assembled in Norman, OK
- ASHRAE 90.1 Compliant
- R-410A Refrigerant
- Cooling Only configurations available
- Scroll Compressors
- Up to 15.0 SEER and 12.5 EER on the Energy Star Compliant Energy Level
- State of the art Microprocessor Controls with specific programming for product applications
- Evaporator and Condenser Coils coils utilize copper tube/ aluminum fin design for proven reliability and performance.
- TXV (Thermostatic Expansion Valve) standard on all models
- Single-stage Cooling (3 -6 ton models)
- Alternate Motor and Drives

Options and Accessories

- Economizers with Barometric Relief
- Louvered Hail Guards
- Non-fused Disconnect
- Power Exhaust
- Smoke Detectors
- Manual and Motorized Dampers
- Hinged Cabinet Doors
- Thru-The-Base Connections for power and control wiring.
- Field Installed Electric Heat Kits. Installation Instruction for the Electric Heat Kits may be found in the Electric Heat Kits.
- Intelli*Speed*™ with Premium Efficiency indoor motors to meet ASHRAE 90.1 requirements (6 - 10 ton XX and 6-8.5 ton XY models)

Component Location

Heat Pump (3 Through 10 Ton)

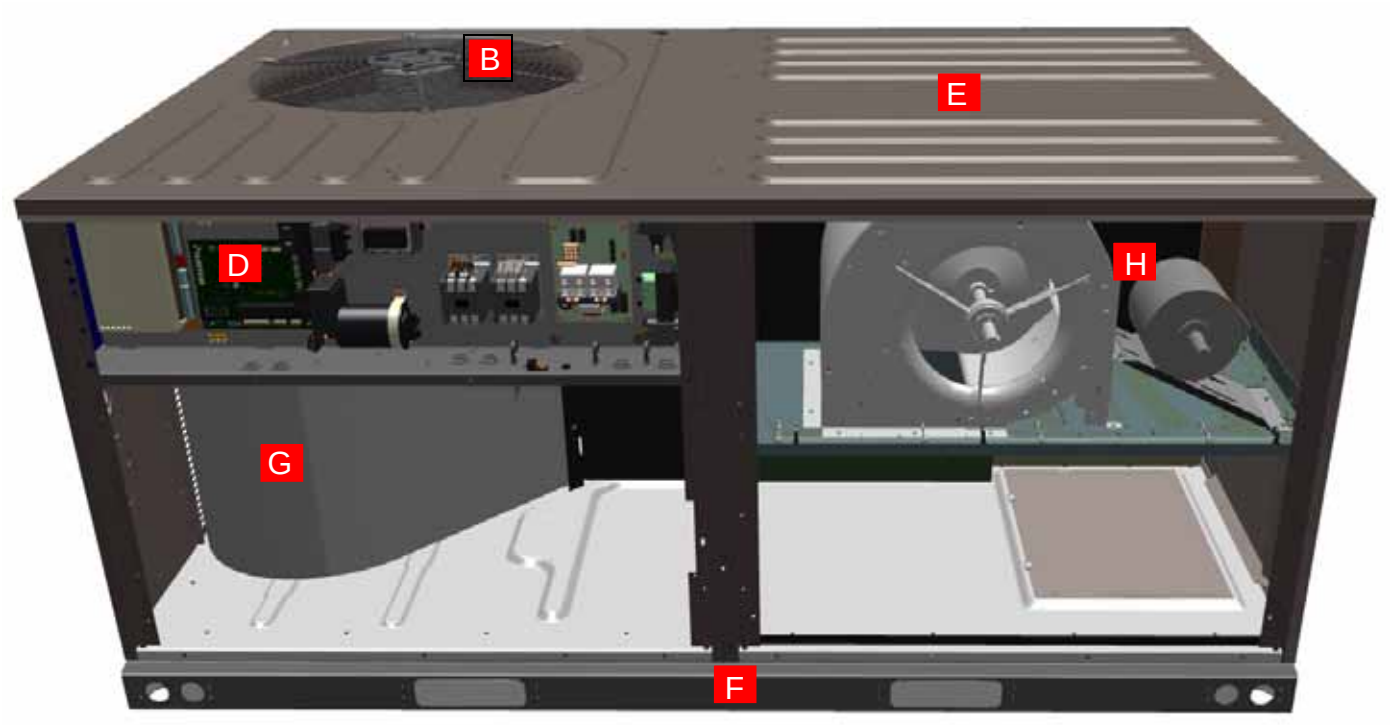

Click on the letters to see a description of the features.

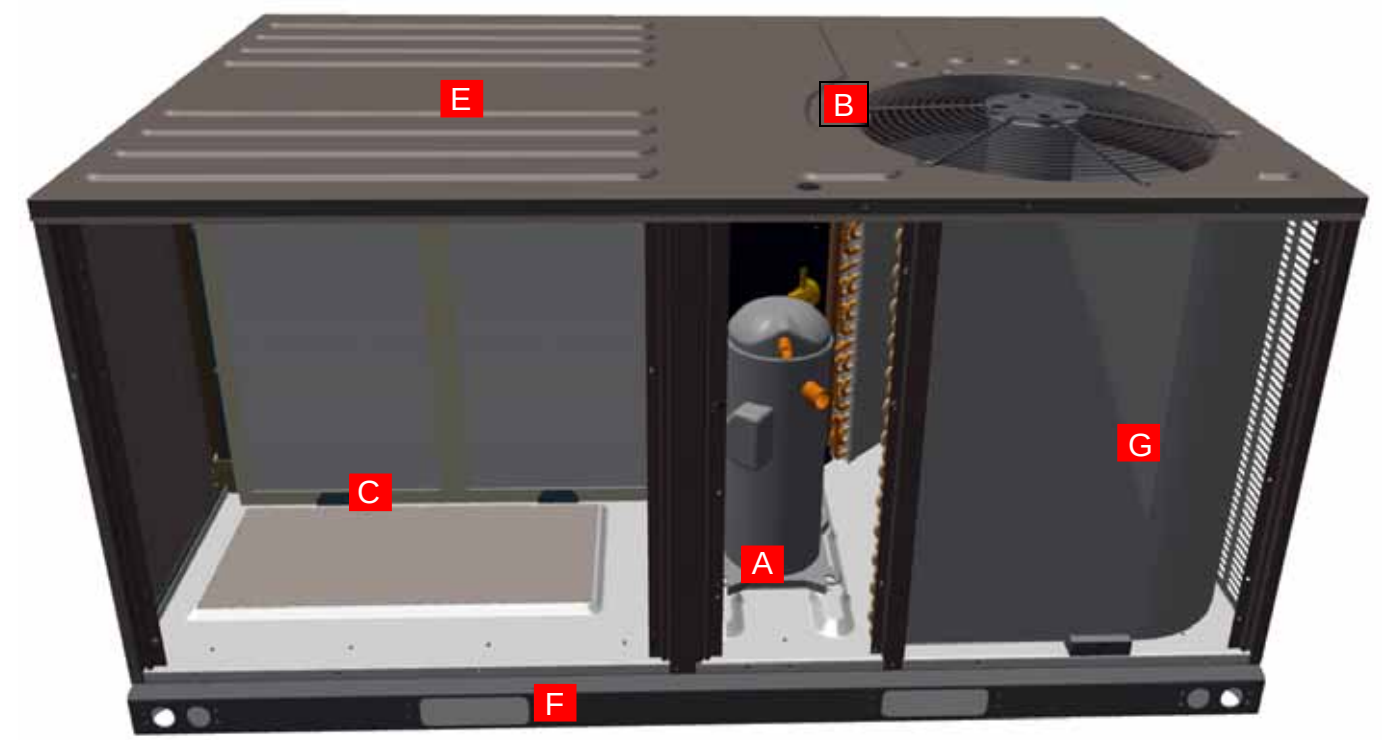

Features and Benefits

Standard and High Efficiency Available - The high efficiency meets the requirements for Energy Star that exceeds 15 SEER and 12 EER. These efficiencies meet or exceed all legislated minimum levels providing lower operating costs.

A **All models utilize a scroll compressor** that are environmentally friendly by utilizing R-410A refrigerant. Use of the scroll compressor technology means a simple internal design, fewer moving parts, equating to a quiet, reliable, easy to service and efficient system. Internal compressor protection is standard and compressors include protection to prevent liquid damage.

Total system design - A single circuit, single compressor design is used on the 3-5 ton units for cost effectiveness and reliability without compromising quality.

System Protection - Liquid line filter-driers, high and low pressure safeties are standard on each refrigerant circuit. Suction line sensors monitor temperature to prevent possible liquid flood back to the compressors and also protect against loss of charge and coil frosting.

B **Balanced outdoor fan design makes for a quieter unit** - The outdoor condenser fans are dynamically balanced for better performance and reliability. The direct drive fan design mounted to the fan grill allows for quick and easy service. Where other's components might fail at extreme temperatures our units are tested and rated up to 125°F ambient cooling operation.

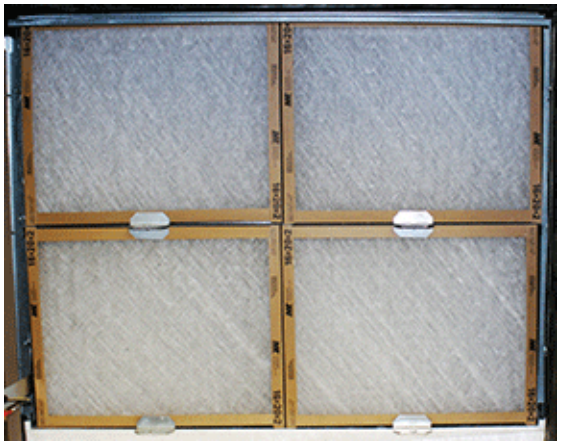

C **Convertible Filter Rack -** No tools required for easy field conversion of the filter rack to accommodate either 2” or 4” filters. Units will ship with MERV 4 throwaway filters standard; however MERV 8 and MERV 13 filters can be easily added through the tool-free filter access panel to meet LEED requirements. Refer to physical data tables for filter size details.

D **Units will come with the new state of the art Smart Equipment™ control system.** The new unit control incorporates the best of the already proven Smart Equipment™ controls and creates a more robust, intelligent control. The goal of this control is to utilize cutting edge technology making the equipment easier to install, operate, and service. All units are Factory commissioned, configured, and run tested.

Versatile - The Smart Equipment™ control can be configured to use with a standard thermostat (easy to connect screw terminals), a zone sensor, or can be setup to communicate with multiple BAS communication protocols to integrate with building automation systems.

Reduce field installed complexity - Each unit comes equipped with factory installed supply air, return air, and outdoor air temperature sensors providing key temperature readings thus reduce field installed complexity.

On-board USB Port - The new control comes with a long list of features including data logging, current and previous system faults and software update capabilities using the on board USB port and common flash drive. Energy use monitoring capabilities allow custom tailoring to allow a system to work more efficiently at all times and occupancy levels. Self test and start-up reports also available from the board VIA the USB port.

Embedded LCD Display - The board has a easy to read, built-in LCD display and easy to use navigation joystick and buttons allowing the user to quickly navigate the menus displaying unit status, options, current function, supply, return and outdoor temperatures, fault codes and other information.

Safety Monitoring - The control monitors the outdoor, supply, and return air temperatures and the high and low pressure switch status on the independent refrigerant circuits. On units with heating the high temperature limit switches are monitored on electric heating units. The control also monitors the voltage supplied to the unit and will protect the unit if low voltage due to a brown out, or other electrical issue occurs.

Low Ambient - An integrated low-ambient control allows units to operate in the cooling mode down to 40°F outdoor ambient without additional components or intervention. Optionally, the control board can be programmed to lockout the compressors when the outdoor air temperature is low or when free cooling is available.

Anti-Short Cycle Protection - To aid compressor life, an anti-short cycle delay is incorporated into the standard control. Compressor reliability is further ensured by programmable minimum run times. For testing, the anti-short cycle delay can be temporarily overridden with the push of a button.

Fan Delays - Fan on and fan off delays are fully programmable. Furthermore, the heating and cooling fan delay times are independent of one another. All units are programmed with default values based upon their configuration of cooling and/or heating capacity.

Nuisance Trip Protection and Three Strikes - To prevent nuisance calls, the control board uses a three times, you're out philosophy. The high, low-pressure switch, anti-freeze protection, low voltage or heating high limit must trip three times within two hours before the unit control board will lock out the associated compressor. The same safety must trip three times before a hard lockout will occur.

E **Robust design -** Each unit is designed with an embossed top to increase structural support and ensure rigidity. The unit has a powder paint exterior finish including a industry leading 750 hour salt spray rating. All units are painted with a long lasting, powder paint that stands up over the life of the unit.

F **Full Perimeter base rail that fits on many existing curbs -** This product was designed with the replacement market in mind which is why it will fit on many existing curbs in the field but it also takes into account the new construction market by being versatile and sturdy. This unit is equipped with heavier gauge and innovatively designed base rails to prevent damage from transporting and rigging.

G **Coils -** All condenser coils utilize copper tube with aluminum fin design for proven reliability and performance.

All evaporator coils utilize copper tube with aluminum fin design for proven reliability and performance.

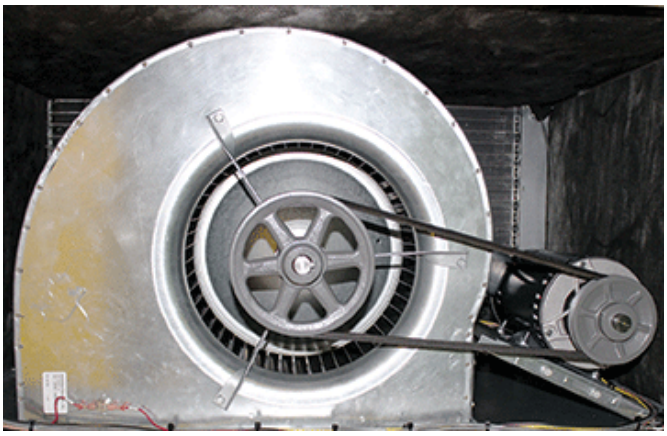

H **Rigid Mounted Blower Assembly -** Dynamically balanced indoor fans ensure better performance and reliability. Large access panels for easier access, service, and maintenance. X13 Direct drive (Standard Static Option) and belt drive (Medium Static and High Static Options) options available on 3-10 ton products.

Warranty - All models include a 1-year limited warranty on the complete unit. Compressors carry a 5-year warranty.

Factory Installed Options

(Nomenclature Digit Position)

Airflow Options (8)
Alternate Indoor Blower Motor - For applications with high static restrictions, units are offered with optional indoor motors providing higher external static capability and/or higher airflow, depending upon the installer's needs. • A=Standard Static (Direct Drive for 3-5 Ton, Belt Drive 6-10 Ton) • B=Medium Static (Belt Drive for 3-10 Ton) • C=High Static (Belt Drive for 3-10 Ton; 3 Phase Models Only)

VFD/VAV Options (9)
Intelli*Speed*™ Supply Fan Control Option (ASHRAE 90.1 compliant, section 6.4.3.10) - Units configured with the Intelli*Speed*™ Supply Fan Option will contain a VFD for variable volume supply fan operation. This option allows the supply fan RPM to vary based on the number of compressors or heating stages energized. The economizer's minimum position is also configurable. • 1=None (Comes with standard constant volume controls) • 3=VFD Intelli*Speed*™

Coil Options (10)
E-Coat Coils – Coils are coated with an epoxy polymer coating to protect against corrosion. A 3-year warranty is added when this option is selected. • A= Standard Indoor & Outdoor Coils (fin/tube design on indoor and outdoor coils with no E-Coat coating added). • B= Standard Indoor Coil & E-Coat Coil Outdoor Coil (fin/tube design on indoor and outdoor coils. E-Coat coating added to outdoor coil) • C= E-Coat Indoor Coil & Standard Outdoor Coil (fin/tube design on indoor and outdoor coils. E-Coat coating added to indoor coil) • D= E-Coat Indoor Coil & Outdoor Coil (fin/tube design on indoor and outdoor coils. E-Coat coating added to indoor and outdoor coil)

Controls (11)

Smart Equipment™ - This is the Standard microprocessor control with capabilities to work with a sensor or thermostat only. Smart Equipment™ with BAS includes communication board with BACnet open-protocol system.

FDD (Fault Detection and Diagnostics) - Refrigerant side factory installed control system option on the commercial equipment that constantly monitors refrigerant circuit pressures, refrigerant circuit temperatures, as well as the environmental temperatures and humidity via multiple sensor inputs. Provides a building owner, technician or contractor with the operational characteristics of the RTUs entire refrigerant circuit to ensure the unit is functioning at its specified performance level. Provides alarms if the unit is not functioning optimally. Remotely accessible via the Mobile Access Portal (MAP) gateway as well as scrolled on the UCB LCD screen.

Verasys - Verasys provides a simple user experience with configurable self-recognizing controllers without the need for any additional tools. Verasys creates enhanced integration of HVACR equipment, zoning, and controls. Contractors are able to offer a complete bundled solution of equipment and controls to serve the light commercial market.

- A=Smart Equipment™
- B=Smart Equipment™ + BACnet MSTP, Mdbs, N2 COM Card
- C= Fault Detection Diagnostics (FDD) Refrigerant Side
- J=Verasys Single Zone
- K=Verasys Change Over Bypass
- M=Verasys Single Zone W/FDD
- N=Verasys Change Over Bypass W/FDD

Sensor Options (12)

- 1=None (Units come standard with factory installed supply air, return air, and outdoor air temperature sensors)
- 2=RA[1] Smoke Detector
- 3=SA Smoke Detector
- 4=RA[1] & SA Smoke Detector

1. Return Air Smoke Detector Sensor Must Be Relocated in the Field. (See Unit Installation Manual.)

Economizer/Damper (13)

Down flow Economizers (with barometric relief) - All units offer a variety of optional factory installed economizers that are shipped, installed and wired with AMCA 511 Licensed Class 1A low leak dampers designed to exceed ASHRAE 90.1 and the International Energy Conservation Code (IECC) certification requirements by achieving leakage rates of 3 cfm/sq. ft. at 1" of static pressure. Each economizer goes through a rigorous 60,000 cycle test. Dry bulb, single enthalpy, and dual enthalpy (with field installed kit) can be selected. All economizer options are fully integrated into the Smart Equipment™ controls. The economizer has spring return, fully modulating damper actuators and is capable of introducing up to 100% outdoor air. As the outdoor air intake dampers open, the return air dampers close. The changeover from mechanical refrigeration to economizer operation is regulated by the outdoor air dry bulb temperature or the outdoor air enthalpy input. The dual enthalpy kit provides a second input used to monitor the return air (field installed). The installer needs only to assemble the outdoor air hood, attach the enthalpy control the hood and mount the hood to the unit (Hood and control are provided).

Dry Bulb Economizer - Economizer operation is enabled by the outdoor air temperature being less than the setpoint of the economizer module.

Enthalpy Economizer - The added outdoor air enthalpy sensor enables economizer operation if the outdoor enthalpy is less than the setpoint of the economizer logic module.

- A=None
- B=Dry Bulb Economizer
- C=Enthalpy Economizer

Convenience Outlet (14)

Convenience Outlet - (Powered and Non-Powered) - This option locates a 120V single-phase GFCI outlet with cover, on the corner of the unit housing adjacent to the compressors. The Non-powered option requires the installer to provide the 120V single-phase power source and wiring. Factory installed option only.

- 1=None
- 2=Non-powered Convenience Outlet
- 3=Powered Convenience Outlet

Electrical Options (15)
Disconnect Switch - For units with field installed electric heat kits, two factory installed disconnect sizes are available (60A or 100A non-fused disconnect). Depending on the field installed heater kit selected, the factory installed disconnect may not be sufficient. Always refer to the unit nameplate or unit electrical data for the proper disconnect size. If the heater application requires a disconnect above 100 Amps, the factory installed disconnect should be removed and an appropriately sized external disconnect should be installed. • 1=None • 2=Non-fused Disconnect[1]

1. Verify on the unit nameplate that the disconnect is properly sized for the application. Units with field installed electric heat may exceed the factory installed disconnect amperage rating.

Cabinet Options (16)
Louvered Hail Guard - This kit includes a decorative louvered panel which installs over the outside condenser coil and prevents damage to the coil fins from hail strikes. **Hinged Cabinet Doors** - The factory installed hinged panel option will save time, money and labor while allowing easy servicing of blower components, filters and controls. With this option there is no longer a need to remove panels to access these critical sections and running the risk of losing panels or roof damage from loose panels and materials. Extra care was taken to design a durable hinged panel with leak tight seal. • 1=None • 2=Louvered Panels • 3=Hinged Cabinet Doors • 4=Hinged Cabinet Doors And Louvered Panels

Field Installed Accessories

- **Down flow Economizers/Horizontal Economizers (with barometric relief)** - All units offer a variety of field installed economizers that are installed and wired with AMCA 511 Licensed Class 1A low leak dampers designed to exceed ASHRAE 90.1 and the International Energy Conservation Code (IECC) certification requirements by achieving leakage rates of 3 cfm/sq. ft. at 1" of static pressure. Each economizer goes through a rigorous 60,000 cycle test. Dry bulb, single enthalpy, and dual enthalpy (with field installed kit) can be selected. All economizer options are fully integrated into the Smart Equipment™ controls. The economizer has spring return, fully modulating damper actuators and is capable of introducing up to 100% outdoor air. As the outdoor air intake dampers open, the return air dampers close. The changeover from mechanical refrigeration to economizer operation is regulated by the outdoor air dry bulb temperature or the outdoor air enthalpy input. The dual enthalpy kit provides a second input used to monitor the return air (field installed). The installer needs only to assemble the outdoor air hood, attach the enthalpy control the hood and mount the hood to the unit (Hood and control are provided).
- **Dry Bulb Economizer -** Economizer operation is enabled by the outdoor air temperature being less than the setpoint of the economizer module.
- **Single Enthalpy Control, Accessory for Economizer -** All field installed economizers will come standard as a dry bulb economizer. This kit adds an outdoor air enthalpy sensor which enables economizer operation if the outdoor enthalpy is less than the setpoint of the economizer logic module.
- **Dual Enthalpy Control, Accessory for Economizer -** All field installed economizers will come standard as a dry bulb economizer. This kit adds an outdoor air enthalpy sensor and return air enthalpy sensor which enables economizer operation if the outdoor enthalpy is less than the setpoint of the economizer logic module.
- **Power Exhaust -** This accessory installs in the unit with a down flow economizer or in the ductwork for a horizontal application.
- **Louvered Hail Guard -** This kit includes a decorative louvered panel which installs over the outside condenser coil and prevents damage to the coil fins from hail strikes.
- **Roof Curbs -** The roof curbs have insulated decks and are shipped disassembled The roof curbs are available in 14” and 24” heights.
- **Thermostat -** The units are designed to operate with 24-volt electronic and electro-mechanical thermostats.
- **Smoke detectors -** The smoke detectors stop operation of the unit by interrupting power and providing a fault message to the control board if smoke is detected within the air compartment. Smoke detectors are available for both the supply and/or return air configurations.
- **Hinged Filter Access Panel For Use With Horizontal Flow Economizer -** Allows hinged access to the filter section when used with a horizontal economizer.
- **Low Ambient Head Pressure Control Kit -** The Electronic Low Ambient Controller is designed to regulate condenser head pressure at low ambient temperatures by varying the amount of airflow through the condenser.
- **Manual Outdoor Air Damper -** Like the motorized outdoor air damper, each manual outdoor air damper includes a slide-in damper assembly with an outdoor air hood and filters. Customers have a choice of dampers with ranges of 0% to 100% or 0% to 35% outdoor air entry.
- **Thru The Base Connection -** Kits are available to provide a way to route wiring to the unit through the base of the unit and through the base or through the curb. These kits provide a seal tight way to bring power to the unit without additional roof penetrations.
- **Electric Heat (Field installed option Only) -** Select heater sizes for 3-10 ton units available. Necessary hardware and connectors are included with the heaters.

Nomenclature

3-10 Ton Model Number Nomenclature

XY	E	04	A	2	A	1	A	A	1	A	1	1	1	A	2

Product Category

XX = Pkg HP Standard Efficiency
XY = Pkg HP High Efficiency
XQ = Pkg HP 14 SEER Standard Efficiency

Heat Type (3)

E = No Heat, Electric Heat Field Installed

Nominal Cooling Capacity

04 = 3 Ton
05 = 4 Ton
06 = 5 Ton
07 = 6 Ton
A7 = 6 Ton w/2 Stage Cooling (XX, XY Only)
08 = 7.5 Ton
09 = 8.5 Ton
12 = 10 Ton

Heat Size

A = No Heat (Cooling Only)

Voltage

1 = 208/230-1-60 (3-5 Ton Only)
2 = 208/230-3-60
4 = 460-3-60
5 = 575-3-60

Airflow

A = Standard Static
B = Medium Static
C = High Static

Options

1 = None
3 = VFD IntelliSpeed (XYA7-09, XXA7-12)

Note: Not all options may be available. Contact local distributor.

Coil Options

A = Standard Indoor & Outdoor Coils
B = Standard Indoor Coil & E-Coat Outdoor Coil
C = E-Coat Indoor Coil & Standard Outdoor Coil
D = E-Coat Indoor & Outdoor Coils

Controls

A = Smart Equipment™
B = Smart Equipment™ + BACnet MSTP, Mdbs, N2 COM Card
C= Fault Detection and Diagnostics (FDD)
J = Verasys Single Zone
K = Verasys Change Over Bypass
M = Verasys Single Zone W/FDD
N = Verasys Change Over Bypass W/FDD

Sensor Options

1 = None (Units come standard with factory installed supply air, return air, and outdoor air temperature sensors)
2 = RA[1] Smoke Detector
3 = SA Smoke Detector
4 = RA[1] & SA Smoke Detector

1. Return Air Smoke Detector Sensor Must Be Relocated in the Field. (See Unit Installation Manual.)

Economizer / Damper

A = None
B = Dry Bulb Economizer
C = Enthalpy Economizer

Convenience Outlet

1 = None
2 = Non-powered
3 = Powered

Electrical Options

1 = None
2 = Non-fused Disconnect[1]

1. Verify on the unit nameplate that the disconnect is properly sized for the application. Units with field installed electric heat may exceed the factory installed disconnect amperage rating.

Cabinet Options

1 = None
2 = Louvered Panels Installed
3 = Hinged Cabinet Doors
4 = Hinged Cabinet Doors & Louvered Panels

Special Options

A = None

Product Generation

2 = Second Generation

XYE04-09, XXEA7-12, XQE04-06 Accessories

Accessory Kit Number	Description	Where Used	Voltage
2EE04706724	Econ, DB, Vertical Flow, Small Footprint	XYE04, XYE05, XYE06, XQE04, XQE05, XQE06, XXEA7	All
2EE04706824	Econ, DB, Vertical Flow, Large Footprint	XYE07, XYEA7, XYE08, XYE09, XXE08, XXE09, XXE12	All
2EE04707024	Econ, DB, Horizontal Flow, Small Footprint, Short Cabinet	XYE04, XQE04	All
2EE04707124	Econ, DB, Horizontal Flow, Small Footprint, Tall Cabinet	XYE05, XYE06, XQE05, XQE06, XXEA7	All
2EE04707224	Econ, DB, Horizontal Flow, Large Footprint, Short Cabinet	XYE07, XYEA7	All
2EE04707324	Econ, DB, Horizontal Flow, Large Footprint, Tall Cabinet	XYE08, XYE09, XXE08, XXE09, XXE12	All
1FA0415	Manual Outside Air Damper 0-35%	XYE04, XYE05, XYE06, XQE04, XQE05, XQE06, XXEA7	All
1FA0416	Manual Outside Air Damper 0-35%	XYE07, XYEA7, XYE08, XYE09, XXE08, XXE09, XXE12	All
1FA0417	Manual Outside Air Damper 0-100%	XYE04, XYE05, XYE06, XQE04, XQE05, XQE06, XXEA7	All
1FA0418	Manual Outside Air Damper 0-100%	XYE07, XYEA7, XYE08, XYE09, XXE08, XXE09, XXE12	All
2MD04704224	Motorized Outside Air Damper 0-100%	XYE04, XYE05, XYE06, XQE04, XQE05, XQE06, XXEA7	All
2MD04704324	Motorized Outside Air Damper 0-100%	XYE07, XYEA7, XYE08, XYE09, XXE08, XXE09, XXE12	All
2EC0401	Kit, Single Enthalpy Field Installed	All	All
2EC0402	Kit, Dual Enthalpy Field Installed	All	All
1HD0401	Hinged Filter Access Panel For Units With A Horizontal Economizer	XYE04, XQE04	All
1HD0402	Hinged Filter Access Panel For Units With A Horizontal Economizer	XYE05, XYE06, XQE05, XQE06, XXEA7	All
1HD0403	Hinged Filter Access Panel For Units With A Horizontal Economizer	XYE07, XYEA7	All
1HD0404	Hinged Filter Access Panel For Units With A Horizontal Economizer	XYE08, XYE09, XXE08, XXE09, XXE12	All
1HG0419	Hail Guard Kit Small Footprint, Short Cabinet	XYE04, XQE04	All
1HG0420	Hail Guard Kit Small Footprint, Tall Cabinet	XYE05, XYE06, XQE05, XQE06, XXEA7	All
1RC0456	Curb Rigid 14" Small Footprint	XYE04, XYE05, XYE06, XQE04, XQE05, XQE06, XXEA7	All
1RC0457	Curb Rigid 14" Large Footprint	XYE07, XYEA7, XYE08, XYE09, XXE08, XXE09, XXE12	All
1RC0458	Curb Rigid 24" Small Footprint	XYE04, XYE05, XYE06, XQE04, XQE05, XQE06, XXEA7	All
1RC0459	Curb Rigid 24" Large Footprint	XYE07, XYEA7, XYE08, XYE09, XXE08, XXE09, XXE12	All
2PE04704206	Power Exhaust Vert Flow Small Footprint 208V-230V 1-ph	XYE04, XYE05, XYE06, XQE04, XQE05, XQE06, XXEA7	208/230-1-60
2PE04704225	Power Exhaust Vert Flow Small Footprint 208V-230V 3-ph	XYE04, XYE05, XYE06, XQE04, XQE05, XQE06, XXEA7	208/230-3-60
2PE04704246	Power Exhaust Vert Flow Small Footprint 460V 3-ph	XYE04, XYE05, XYE06, XQE04, XQE05, XQE06, XXEA7	460-3-60
2PE04704258	Power Exhaust Vert Flow Small Footprint 575V 3-ph	XYE04, XYE05, XYE06, XQE04, XQE05, XQE06, XXEA7	575-3-60
2PE04704325	Power Exhaust Vert Flow Large Footprint 208V-230V 3-ph	XYE07, XYEA7, XYE08, XYE09, XXE08, XXE09, XXE12	208/230-3-60
2PE04704346	Power Exhaust Vert Flow Large Footprint 460V 3-ph	XYE07, XYEA7, XYE08, XYE09, XXE08, XXE09, XXE12	460-3-60
2PE04704358	Power Exhaust Vert Flow Large Footprint 575V 3-ph	XYE07, XYEA7, XYE08, XYE09, XXE08, XXE09, XXE12	575-3-60
2PE04704406	Power Exhaust Horiz Flow Small Footprint 208V-230V 1-ph	XYE04, XYE05, XYE06, XQE04, XQE05, XQE06, XXEA7	208/230-1-60
2PE04704425	Power Exhaust Horiz Flow Small Footprint 208V-230V 3-ph	XYE04, XYE05, XYE06, XQE04, XQE05, XQE06, XXEA7	208/230-3-60

XYE04-09, XXEA7-12, XQE04-06 Accessories (Continued)

Accessory Kit Number	Description	Where Used	Voltage
2PE04704446	Power Exhaust Horiz Flow Small Footprint 460V 3-ph	XYE04, XYE05, XYE06, XQE04, XQE05, XQE06, XXEA7	460-3-60
2PE04704458	Power Exhaust Horiz Flow Small Footprint 575V 3-ph	XYE04, XYE05, XYE06, XQE04, XQE05, XQE06, XXEA7	575-3-60
2PE04704525	Power Exhaust Horiz Flow Large Footprint 208V-230V 3-ph	XYE07, XYEA7 XYE08, XYE09, XXE08, XXE09, XXE12	208/230-3-60
2PE04704546	Power Exhaust Horiz Flow Large Footprint 460V 3-ph	XYE07, XYEA7, XYE08, XYE09, XXE08, XXE09, XXE12	460-3-60
2PE04704558	Power Exhaust Horiz Flow Large Footprint 575V 3-ph	XYE07, XYEA7, XYE08, XYE09, XXE08, XXE09, XXE12	575-3-60
2EK04510625	6.5 KW Electric Heat	XYE04, XYE05, XYE06, XQE04, XQE05, XQE06, XXEA7	208/230-3-60
2EK04510646	6.0 KW Electric Heat	XYE04, XYE05, XYE06, XQE04, XQE05, XQE06, XXEA7	480-3-60
2EK04511058	9.2 KW Electric Heat	XYE04, XYE05, XQE04, XQE05	575-3-60
2EK04511125	10.5 KW Electric Heat	XYE04, XYE05, XYE06, XQE04, XQE05, XQE06, XXEA7	208/230-(1 or 3)-60
2EK04511625	16 KW Electric Heat	XYE04, XYE05, XYE06, XQE04, XQE05, XQE06, XXEA7	208/230-3-60
2EK04511146	11.5 KW Electric Heat	XYE04, XYE05, XYE06, XQE04, XQE05, XQE06, XXEA7	480-3-60
2EK04511458	13.8 KW Electric Heat	XYE04, XYE05, XYE06, XQE04, XQE05, XQE06, XXEA7	575-3-60
2EK04511446	14 KW Electric Heat	XYE04, XYE05, XYE06, XQE04, XQE05, XQE06, XXEA7	480-3-60
2EK04510725	6.0 KW Electric Heat	XYE07, XYEA7	208/230-3-60
2EK04510746	6.0 KW Electric Heat	XYE07, XYEA7	460-3-60
2EK04511725	16 KW Electric Heat	XYE07, XYEA7, XYE08, XYE09, XXE08, XXE09, XXE12	208/230-3-60
2EK04511746	16.5 KW Electric Heat	XYE07, XYEA7, XYE08, XYE09, XXE08, XXE09, XXE12	460-3-60
2EK04511758	17 KW Electric Heat	XYE07, XYEA7, XYE08, XYE09, XXE08, XXE09, XXE12	575-3-60
2EK04512358	23 KW Electric Heat	XYE06, XQE06, XXEA7	575-3-60
2EK04512525	24.8 KW Electric Heat	XYE07, XYEA7, XYE08, XYE09, XXE08, XXE09, XXE12	208/230-3-60
2EK04512646	25.5 KW Electric Heat	XYE07, XYEA7	460-3-60
2EK04512658	25.7 KW Electric Heat	XYE07, XYEA7	575-3-60
2EK04512846	27.8 KW Electric Heat	XYE07, XYEA7, XYE08, XYE09, XXE08, XXE09, XXE12	460-3-60
2EK04513225	32 KW Electric Heat	XYE07, XYEA7, XYE08, XYE09, XXE08, XXE09, XXE12	208/230-3-60
2EK04513346	33 KW Electric Heat	XYE07, XYEA7, XYE08, XYE09, XXE08, XXE09, XXE12	460-3-60
2EK04513458	34 KW Electric Heat	XYE07, XYEA7, XYE08, XYE09, XXE08, XXE09, XXE12	575-3-60
2EK04514225	42.4 KW Electric Heat	XYE07, XYEA7, XYE08, XYE09, XXE08, XXE09, XXE12	208/230-3-60
2EK04514246	41.7 KW Electric Heat	XYE07, XYEA7, XYEA7, XYE08, XYE09, XXE08, XXE09, XXE12	460-3-60
2SD04701224	Supply Air Stream Smoke Detector	XYE04, XYE05, XYE06, XYE07, XYEA7, XYE08, XYE09, XXE12, XQE04, XQE05, XQE06	All
2SD04701124	Return Air Stream Smoke Detector	XYE04, XYE05, XYE06, XQE04, XQE05, XQE06, XXEA7	All
2SD04701424	Return Air Stream Smoke Detector	XYE07, XYEA7, XYE08, XYE09, XXE08, XXE09, XXE12	All
2SD04701324	Combination Supply & Return Air Stream Smoke Detector	XYE04, XYE05, XYE06, XQE04, XQE05, XQE06, XXEA7	All

XYE04-09, XXEA7-12, XQE04-06 Accessories (Continued)

Accessory Kit Number	Description	Where Used	Voltage
2SD04701624	Combination Supply & Return Air Stream Smoke Detector	XYE07, XYEA7, XYE08, XYE09, XXE08, XXE09, XXE12	All
2FDD61	Field Installed Refrigeration-side FDD accessory for use with SE Controls	XY04, XY05, XY06, XY07, XYA7, XQ04, XQ05, XQ06, XXEA7	All
2FDD62	Field Installed Refrigeration-side FDD accessory for use with SE Controls	XY08, XY09, XX08, XX09, XX12	All
1TB0403	Small Footprint Thru The Base Electrical	XYE04, XYE05, XYE06, XQE04, XQE05, XQE06, XXEA7	All
1TB0404	Large Footprint Thru The Base Electrical & Gas	XYE07, XYEA7, XYE08, XYE09, XX08, XX09, XXE12	All
1BD0409	Burglar Bar Kit	XYE04, XYE05, XYE06, XQE04, XQE05, XQE06, XXEA7	All
1BD0410	Burglar Bar Kit	XYE07, XYEA7, XYE08, XYE09, XX08, XX09, XXE12	All

AHRI Cooling Rating Table

UNIT	COOLING STAGES	NOM. COOLING CAPACITY (TONS)	NET COOLING CAPACITY (MBH)	17F Heating Capacity (MBH)	47F High Heating Capacity (MBH)	TOTAL POWER (kW)	SEER	HSPF	EER	IEER	IEER IntelliSpeed
XYE04	1	3	36.4	18.4	34.0	2.9	15.0	8.0	12.5	---	---
XYE05	1	4	47.0	26.0	46.0	3.8	15.0	8.2	12.5	---	---
XYE06	1	5	58.5	30.0	55.0	4.7	15.0	8.2	12.5	---	---
XYE07	1	6	71.0	39.0	69.5	5.9	N/A	N/A	12.0	13.2	---
XYEA7	2	6	70.0	38.0	67.0	5.6	N/A	N/A	12.0	14.1	14.8
XYE08	2	7.5	88.0	47.0	84.0	7.3	N/A	N/A	12.1	14.0	16.0
XYE09	2	8.5	98.0	54.5	96.5	8.2	N/A	N/A	12.0	13.8	15.8
XXEA7	2	6	66.7	35.0	64.4	6.1	N/A	N/A	11.0	12.7	13.2
XXE08	2	7.5	90.0	49.0	84.0	8.4	N/A	N/A	11.5	13.3	15.1
XXE09	2	8.5	102.0	57.0	94.0	8.8	N/A	N/A	11.8	13.1	14.4
XXE12	2	10	116.0	62.0	108.8	10.2	N/A	N/A	11.0	N/A	13.4
XQE04	1	3	35.6	18.5	34.2	2.9	14	8.1	12.1	---	---
XQE05	1	4	48	26.4	46.7	3.9	14.5	8	12.25	---	---
XQE06	1	5	57.4	30.6	54.5	4.7	14.5	8.25	12.25	---	---

AHRI 270 Outdoor Sound Power Levels

Unit (Tons)	Sound Rating[1] (dB-A)	Octave Bands (Hz)							
		63	125	250	500	1000	2000	4000	8000
XYE04 (3)	79	81.5	84.5	76.5	75.0	74.0	69.5	65.5	61.0
XYE05 (4)	79	82.0	85.0	77.5	75.5	74.0	70.0	66.5	62.0
XYE06 (5)	80	83.0	85.0	77.0	75.5	75.0	70.0	66.0	62.0
XYE07 (6)	82.73	88.0	87.0	81.5	80.5	78.0	73.0	68.5	61.5
XYEA7 (6)	83	85	86	81	80	78	73	70	65
XYE08 (7.5)	88.86	93.5	82.5	83.0	84.5	85.5	81.5	75.5	70.0
XYE09 (8.5)	86.25	92.0	82.5	83.5	83.5	81.5	76.5	71.5	66.0
XXEA7 (6)	77.48	85.0	83.5	78.0	74.0	72.5	67.5	64.5	60.5
XXE08 (7.5)	83.16	86.5	85.5	81.0	80.0	79.0	74.5	70.5	66.00
XXE09 (8.5)	87.59	87.5	85.0	82.5	81.5	80.0	80.5	74.0	67.5
XXE12 (10)	85.76	97.5	83.5	84.5	82.5	80.5	76.5	75.0	70.0
XQE04 (03)	78.41	79.5	80.5	79.0	75.5	73.5	68.5	64.5	61.5
XQE05 (04)	78.41	79.5	80.5	79	75.5	73.5	68.5	64.5	61.5
XQE06 (05)	77.78	83.5	83.5	76.0	74.0	73.0	68.5	66.5	60.0

1. Rated in accordance with AHRI 270 standard.

Physical Data

XYE04 thru 09

Component	Models						
	XYE04	XYE05	XYE06	XYE07	XYEA7	XYE08	XYE09
Nominal Tonnage	**3**	**4**	**5**	**6**	**6**	**7.5**	**8.5**
AHRI COOLING PERFORMANCE							
Gross Capacity @ AHRI A point (Btu)	37,300	48,600	60,000	73,000	72,000	90,500	101,000
AHRI net capacity (MBH)	36,400	47,000	58,500	71,000	70,000	88,000	98,000
EER	12.5	12.5	12.5	12.0	12.0	12.1	12.0
SEER	15.0	15.0	15.0	-	-	-	-
IEER	-	-	-	13.2	14.1	14.0	13.8
IEER IntelliSpeed	-	-	-	-	14.8	16.0	15.8
CFM	1,250	1,490	1,682	2,440	2,440	2,850	3,000
System power (KW)	2.9	3.8	4.7	5.9	5.6	7.3	8.2
Refrigerant type	R410A	R410A	R410A	R410A	R410A	R410A	R410A
Refrigerant charge (lb-oz)							
System 1	12-0	14-0	16-0	19.25	21.00	14.38	14.50
System 2	-	-	-	-	-	14.25	14.63
ARI HEATING PERFORMANCE							
47ºF capacity rating (MBH)	34,000	46,000	55,000	69,000	67,000	84,000	96,500
System power (KW) / COP	3.0 / 3.3	3.8 / 3.6	4.4 / 3.6	6.0 / 3.4	5.5 / 3.4	7.0 / 3.5	8.3 / 3.4
17ºF capacity rating (MBH)	18,400	26,000	30,000	39,000	38,000	47,000	54,500
System power (KW) / COP	2.7 / 2.0	3.3 / 2.3	3.9 / 2.3	4.8 / 2.4	4.7 / 2.4	5.7 / 2.4	7.1 / 2.26
HSPF (Btu/Watts-hr)	8.0	8.2	8.2	-	-	-	-
DIMENSIONS (inches)							
Length	74.1	74.1	74.1	87.2	87.2	87.2	87.2
Width	48.9	48.9	48.9	61.7	61.7	61.7	61.7
Height	32.5	40.6	40.6	40.6	40.6	55.3	55.3
OPERATING WT. (lbs.)	535	614	653	861	895	1,060	1,061
COMPRESSORS							
Type	SCROLL	SCROLL	SCROLL	SCROLL	2-STAGE SCROLL	SCROLL	SCROLL
Quantity	1	1	1	1	1	2	2
Unit Capacity Steps (%)	-	-	-	100	67/100	50/100	50/100
OUTDOOR COIL DATA							
Face area (Sq. Ft.)	15.1	19.4	19.4	21.0	21.0	25.6	25.6
Rows	2	2	2	3	3	3	3
Fins per inch	17	17	17	13	13	17	17
Tube diameter	0.375	0.375	0.375	0.375	0.375	0.375	0.375
Circuitry Type	Split-face	Split-face	Split-face	Intertwined	Intertwined	Intertwined	Intertwined
Refrigerant control	TXV	TXV	TXV	TXV	TXV	TXV	TXV
INDOOR COIL DATA							
Face area (Sq. Ft.)	5.5	7.3	7.3	8.9	8.9	11.1	11.1
Rows	3	3	4	4	4	4	4
Fins per inch	15	15	15	15	15	15	15
Tube diameter	0.375	0.375	0.375	0.375	0.375	0.375	0.375
Circuitry Type	Intertwined	Intertwined	Intertwined	Intertwined	Intertwined	Intertwined	Intertwined
Refrigerant control	TXV	TXV	TXV	TXV	TXV	TXV	TXV
OUTDOOR FAN DATA							
Quantity	1	1	1	2	2	1	1
Fan diameter (Inch)	22	22	22	22	22	30	30
Type	Prop	Prop	Prop	Prop	Prop	Prop	Prop
Drive type	DIRECT DRIVE	DIRECT DRIVE	DIRECT DRIVE	DIRECT DRIVE	DIRECT DRIVE	DIRECT DRIVE	DIRECT DRIVE
No. speeds	1	1	1	1	2	1	1
Number of motors	1	1	1	2	2	1	1

XYE04 thru 09(Continued)

Component	Models																	
	XYE04		XYE05		XYE06		XYE07			XYEA7			XYE08			XYE09		
Nominal Tonnage	**3**		**4**		**5**		**6**			**6**			**7.5**			**8.5**		
Motor HP each	1/2		1/2		1/2		1/2			1/2			1 1/2			1 1/2		
RPM	1100		1100		1100		1100			850 / 1100			1140			1140		
Total CFM	3600		4000		4300		7600			5800 / 7600			9700			9700		
BELT DRIVE INDOOR FAN DATA																		
Airflow Option	**B**	**C**	**B**	**C**	**B**	**C**	A	B	C	A	B	C	A	B	C	A	B	C
Quantity	1		1		1		1			1			1			1		
Fan diameter (Inch)	10 x 10		10 x 10		11 x 10		15 x 15			15 x 15			15 x 15			15 x 15		
Type	Centrifugal		Centrifugal		Centrifugal		Centrifugal			Centrifugal			Centrifugal			Centrifugal		
Motor Sheave	1VL34	1VL44	1VL34	1VL44	1VL34	1VL44	1VL34	1VL44	1VP50	1VL34	1VL44	1VP50	1VL34	1VL44	1VP50	1VL34	1VL44	1VP50
Blower Sheave	AK46	AK46	AK46	AK46	AK46	AK46	AK74	AK74	AK74	AK74	AK74	AK74	AK74	AK74	AK74	AK74	AK74	AK74
Belt	A39	A40	A39	A40	A37	A39	A47	A48	A48	A47	A48	A48	A47	A48	A50	A47	A48	A50
Motor Max HP, 1 Phase	1.5	-	1.5	-	1.5	-	-			-			-			-		
Motor Max BHP, 3 Phase	2.4	2.4	2.4	2.4	2.4	2.9	2.4	2.9	3.7	2.4	2.9	3.7	2.4	2.4	3.7	2.4	2.4	3.7
RPM	1725		1725		1750		1725	1725	1725	1725	1725	1725	1725	1725	1725	1725	1725	1725
Frame size	56Y		56Y		56HZ		56Y	56Y	56HZ	56Y	56Y	56HZ	56Y	56Y	65HZ	56Y	56Y	65HZ
DIRECT DRIVE INDOOR FAN DATA																		
Air Flow Option	A		A		A		-			-			-			-		
Quantity	1		1		1		-			-			-			-		
Fan Size (Inch)	10 x 10		10 x 10		11 x 10		-			-			-			-		
Type	Centrifugal		Centrifugal		Centrifugal		-			-			-			-		
Motor HP each	3/4		1		1		-			-			-			-		
RPM	1050		1050		1050		-			-			-			-		
FILTERS																		
Quantity - Size	2 - (16 x 25 x 2)[1]		4 - (16 x 16 x 2)[1]		4 - (16 x 16 x 2)[1]		4 - (16 x 20 x 2)[1]			4 - (16 x 20 x 2)[1]			4 - (20 x 20 x 2)[1]			4 - (20 x 20 x 2)[1]		

1. 2-inch Throwaway, Standard, MERV 4 (Minimum Efficiency Reporting Value)

XXEA7 thru12

Component	Models			
	XXEA7	XXE08	XXE09	XXE12
Nominal Tonnage	**6**	**7.5**	**8.5**	**10**
AHRI COOLING PERFORMANCE				
Gross Capacity @ AHRI A point (Btu)	68,500	93,000	105,000	119,000
AHRI net capacity (MBH)	66,700	90,000	102,000	116,000
EER	11.0	11.5	11.8	11.0
SEER	-	-	-	-
IEER	12.7	13.3	13.1	-
IEER IntelliSpeed	14.8	15.1	14.4	13.4
Nominal CFM	2,000	3,300	3,400	3,830
System power (KW)	6.1	8.4	8.8	10.5
Refrigerant type	R410A	R410A	R410A	R410A
Refrigerant charge (lb-oz)				
System 1	15.75	12.00	14.00	13.50
System 2	-	12.00	14.00	13.50
ARI HEATING PERFORMANCE				
47ºF capacity rating (MBH)	64,400	84,000	94,000	108,500
System power (KW) / COP	5.3 / 3.5	7.0 / 3.5	8.3 / 3.35	9.4 / 3.30
17ºF capacity rating (MBH)	35,000	49,000	57,000	62,000
System power (KW) / COP	4.7 / 2.3	6.4 / 2.25	7.5 / 2.25	3.0 / 2.25
HSPF (Btu/Watts-hr)	-	-	-	-
DIMENSIONS (inches)				
Length	74.1	87.2	87.2	87.2
Width	48.9	61.7	61.7	61.7
Height	40.6	48.6	48.6	48.6
OPERATING WT. (lbs.)	652	976	1,025	1060
COMPRESSORS				
Type	2-STAGE SCROLL	SCROLL	SCROLL	SCROLL
Quantity	1	2	2	2
Unit Capacity Steps (%)	67/100	50/100	50/100	50/100
CONDENSER COIL DATA				
Face area (Sq. Ft.)	19.4	25.6	25.6	25.6
Rows	2	2	3	3
Fins per inch	15	17	13	17
Tube diameter	0.375	0.375	0.375	0.375
Circuitry Type	Intertwined	Intertwined	Intertwined	Intertwined
Refrigerant control	TXV	TXV	TXV	TXV
EVAPORATOR COIL DATA				
Face area (Sq. Ft.)	7.3	11.1	11.1	11.1
Rows	4	4	4	4
Fins per inch	15	15	15	15
Tube diameter	0.375	0.375	0.375	0.375
Circuitry Type	Intertwined	Intertwined	Intertwined	Intertwined
Refrigerant control	TXV	TXV	TXV	TXV
CONDENSER FAN DATA				
Quantity of fans	1	2	2	1
Fan diameter (Inch)	22	22	22	30

XXEA7 thru12 (Continued)

Component	Models			
	XXEA7	XXE08	XXE09	XXE12
Nominal Tonnage	**6**	**7.5**	**8.5**	**10**
Type	Prop	Prop	Prop	Prop
Drive type	DIRECT DRIVE	DIRECT DRIVE	DIRECT DRIVE	DIRECT DRIVE
Number of motors	1	2	2	1
Motor HP each	1/2	1/2	1/2	1 1/2
No. speeds	1	1	1	1
RPM	1085	1085	1085	1140
Total CFM	4600	7600	7600	9700

EVAP FAN DATA BELT DRIVE												
Airflow Option	A	B	C	A	B	C	A	B	C	A	B	C
Quantity	1			1			1			1		
Fan diameter (Inch)	11 x 10			15 x 15			15 x 15			15 x 15		
Type	Centrifugal			Centrifugal			Centrifugal			Centrifugal		
Motor Sheave	1VL34	1VL44	1VP50	1VL34	1VL44	1VP50	1VL34	1VL44	1VP50	1VL34	1VP50	1VP56
Blower Sheave	AK51	AK51	AK51	AK74	AK74	AK74	AK74	AK74	AK74	AK79	AK79	AKBK85
Belt	A39	A40	A41	A47	A48	A50	A47	A48	A50	A50	A50	BX52
Motor Max BHP, 3 Phase	2.4	2.9	3.7	2.4	2.4	3.7	2.4	2.4	3.7	2.4	3.7	5.25
RPM	1725	1725	1725	1725	1725	1725	1725	1725	1725	1725	1725	1725
Frame size	56Y	56Y	56HZ	56Y	56Y	65HZ	56Y	56Y	65HZ	56Y	56HZ	145TY

FILTERS				
Quantity - Size	4 - (16 x 16 x 2)[1]	4 - (20 x 20 x 2)[1]	4 - (20 x 20 x 2)[1]	4 - (20 x 20 x 2)[1]

1. 2-inch Throwaway, Standard, MERV 4 (Minimum Efficiency Reporting Value)

XQE04 thru 06

Component	Models		
	XQE04	XQE05	XQE06
Nominal Tonnage	**3**	**4**	**5**
AHRI COOLING PERFORMANCE			
Gross Capacity @ AHRI A point (Btu)	36,238	49,153	58,512
AHRI net capacity (MBH)	35,600	48,000	57,000
EER	12.1	12.25	12.25
SEER	14.0	14.5	14.5
IEER	–	–	–
IEER IntelliSpeed	–	–	–
CFM	1,238	1,550	1,640
System power (KW)	2.85	3.85	4.69
Refrigerant type	R410A	R410A	R410A
Refrigerant charge (lb-oz)			
System 1	10-12	13-4	14-8
System 2	–	–	–
ARI HEATING PERFORMANCE			
47ºF capacity rating (MBH)	34,200	46,700	53,000
System power (KW) / COP	2.9 / 3.25	3.8 / 3.50	4.5 / 3.50
17ºF capacity rating (MBH)	18,500	26,400	29,000
System power (KW) / COP	2.6 / 2.12	3.6 / 2.00	4.0 / 2.20
HSPF (Btu/Watts-hr)	8.1	8.0	8.30
DIMENSIONS (inches)			
Length	74.1	74.1	74.1
Width	48.9	48.9	48.9
Height	32.5	40.6	40.6
OPERATING WT. (lbs.)	529	554	627
COMPRESSORS			
Type	SCROLL	SCROLL	SCROLL
Quantity	1	1	1
OUTDOOR COIL DATA			
Face area (Sq. Ft.)	15.1	19.4	19.4
Rows	2	2	2
Fins per inch	17	17	17
Tube diameter	0.375	0.375	0.375
Circuitry Type	Split-face	Split-face	Split-face
Refrigerant control	TXV	TXV	TXV
INDOOR COIL DATA			
Face area (Sq. Ft.)	5.5	7.3	7.3
Rows	4	3	4
Fins per inch	15	15	15
Tube diameter	0.375	0.375	0.375
Circuitry Type	Intertwined	Intertwined	Intertwined
Refrigerant control	TXV	TXV	TXV
OUTDOOR FAN DATA			
Quantity	1	1	1
Fan diameter (Inch)	22	22	22
Type	Prop	Prop	Prop
Drive type	DIRECT DRIVE	DIRECT DRIVE	DIRECT DRIVE
No. speeds	1	1	1
Number of motors	1	1	1
Motor HP each	1/2	1/2	1/2
RPM	1100	1085	1100

XQE04 thru 06 (Continued)

Component	Models					
	XQE04		XQE05		XQE06	
Nominal Tonnage	**3**		**4**		**5**	
Total CFM	3600		4000		4300	
BELT DRIVE INDOOR FAN DATA						
Quantity	1		1		1	
Fan diameter (Inch)	10 x 10		10 x 10		11 x 10	
Type	Centrifugal		Centrifugal		Centrifugal	
Motor Sheave	1VL34	1VL44	1VL34	1VL44	1VL34	1VL44
Blower Sheave	AK46	AK46	AK46	AK46	AK46	AK46
Belt	A39	A40	A39	A40	A37	A39
Motor HP each, 1 Phase	1.5	-	1.5	-	1.5	-
Motor HP each, 3 Phase	2.4	2.4	2.4	2.4	2.4	2.9
RPM	1725		1725		1750	
Frame size	56Y		56Y		56HZ	
DIRECT DRIVE INDOOR FAN DATA						
Quantity	1		1		1	
Fan Size (Inch)	10 x 10		10 x 10		11 x 10	
Type	Centrifugal		Centrifugal		Centrifugal	
Motor HP each	3/4		1		1	
RPM	1050		1050		1050	
FILTERS						
Quantity - Size	2 - (16 x 25 x 2)[1]		4 - (16 x 16 x 2)[1]		4 - (16 x 16 x 2)[1]	

1. 2-inch Throwaway, Standard, MERV 4 (Minimum Efficiency Reporting Value)

XYE04-09, XQE04-06, XXEA7-12 Unit Limitations

Model	Size (Tons)	Unit Voltage	Unit Limitations		
			Applied Voltage		Outdoor DB Temp
			Min	Max	Max (°F)
XYE/XQE	04 (3)	208/230-1-60	187	252	125
		208/230-3-60	187	252	125
		460-3-60	432	504	125
		575-3-60	540	630	125
XYE/XQE	05 (4)	208/230-1-60	187	252	125
		208/230-3-60	187	252	125
		460-3-60	432	504	125
		575-3-60	540	630	125
XYE/XQE	06 (5)	208/230-1-60	187	252	125
		208/230-3-60	187	252	125
		460-3-60	432	504	125
		575-3-60	540	630	125
XYE/XXE	A7 (6) 07 (6)	208/230-3-60	187	252	125
		460-3-60	432	504	125
		575-3-60	540	630	125
XYE/XXE	08 (7.5)	208/230-3-60	187	252	125
		460-3-60	432	504	125
		575-3-60	540	630	125
XYE/XXE	09 (8.5)	208/230-3-60	187	252	125
		460-3-60	432	504	125
		575-3-60	540	630	125
XXE	12 (10)	208/230-3-60	187	252	125
		460-3-60	432	504	125
		575-3-60	540	630	125

Capacity Performance

XYE04-09, XXEA7-12, XQE04-06 Cooling Capacities

XYE04 (3.0 Ton)

Air on Evaporator Coil		Temperature of Air on Condenser Coil															
		Total Capacity[1] (MBh)	Total Input (kW)[2]	Sensible Capacity (MBh) Return Dry Bulb (°F)						Total Capacity[1] (MBh)	Total Input (kW)[2]	Sensible Capacity (MBh) Return Dry Bulb (°F)					
CFM	WB (°F)			90	85	80	75	70	65			90	85	80	75	70	65
		75°F								85°F							
750	77	47.1	2.1	22.8	19.2	15.5	-	-	-	44.3	2.4	21.6	17.9	14.2	-	-	-
	72	43.0	2.1	27.9	23.7	19.6	15.4	-	-	40.3	2.4	26.7	22.6	18.4	14.2	-	-
	67	38.9	2.1	32.9	28.3	23.6	19.5	15.3	-	36.3	2.4	31.9	27.3	22.6	18.5	14.3	-
	62	37.2	2.1	35.9	31.7	27.6	22.9	19.4	15.4	35.2	2.4	33.9	30.4	26.9	22.3	18.4	14.2
900	77	47.8	2.1	25.9	21.0	16.2	-	-	-	44.9	2.4	24.8	19.8	14.8	-	-	-
	72	44.1	2.1	30.7	25.8	20.9	16.1	-	-	41.4	2.4	29.5	24.6	19.7	14.8	-	-
	67	40.4	2.1	35.5	30.6	25.7	20.9	16.0	-	38.0	2.4	34.3	29.5	24.7	19.8	14.9	-
	62	39.1	2.1	38.0	34.2	30.5	25.2	20.9	16.1	37.0	2.4	36.0	32.8	29.7	24.5	19.8	14.9
	57	38.0	2.1	38.0	36.6	35.3	30.5	25.7	21.0	36.3	2.4	36.3	35.6	34.6	29.7	24.7	19.8
1050	77	48.5	2.1	28.9	22.8	16.8	-	-	-	45.5	2.4	28.0	21.7	15.4	-	-	-
	72	45.3	2.1	33.5	27.9	22.3	16.7	-	-	42.6	2.4	32.3	26.7	21.1	15.4	-	-
	67	42.0	2.1	38.2	33.0	27.8	22.3	16.7	-	39.6	2.4	36.6	31.7	26.8	21.1	15.5	-
	62	41.0	2.1	40.1	36.8	33.4	27.5	22.3	16.8	38.9	2.4	38.1	35.3	32.5	26.6	21.1	15.5
	57	40.1	2.1	40.1	39.4	38.8	33.4	27.9	22.4	38.3	2.4	38.3	38.3	38.1	32.5	26.8	21.1
1200	77	49.3	2.1	32.0	24.7	17.4	-	-	-	46.1	2.4	31.2	23.6	16.0	-	-	-
	72	46.4	2.1	36.4	30.0	23.7	17.4	-	-	43.7	2.4	35.1	28.7	22.4	16.0	-	-
	67	43.6	2.1	40.8	35.4	30.0	23.7	17.4	-	41.3	2.4	38.9	33.9	28.8	22.5	16.1	-
	62	42.8	2.1	42.3	39.3	36.3	29.7	23.7	17.5	40.8	2.4	40.1	37.7	35.3	28.7	22.5	16.1
	57	42.3	2.1	42.3	42.3	42.3	36.3	30.1	23.9	40.3	2.4	40.3	40.3	40.3	35.3	28.9	22.5
1350	72	47.6	2.1	39.2	32.1	25.1	18.0	-	-	44.8	2.4	37.9	30.8	23.7	16.6	-	-
	67	45.1	2.1	43.4	37.7	32.1	25.1	18.1	-	43.0	2.4	41.3	36.1	30.9	23.8	16.7	-
	62	44.7	2.1	44.4	41.8	39.2	32.0	25.2	18.2	42.6	2.4	42.2	40.1	38.0	30.9	23.8	16.7
	57	44.4	2.1	44.4	44.4	44.4	39.3	32.3	25.3	42.3	2.4	42.3	42.3	42.3	38.1	31.0	23.9
1500	72	48.7	2.1	42.0	34.2	26.4	18.7	-	-	45.9	2.4	40.7	32.9	25.0	17.2	-	-
	67	46.7	2.1	46.0	40.1	34.2	26.5	18.7	-	44.6	2.4	43.6	38.3	32.9	25.1	17.3	-
	62	46.6	2.1	46.5	44.3	42.1	34.3	26.6	18.9	44.5	2.4	44.3	42.5	40.8	33.0	25.2	17.4
	57	46.5	2.1	46.5	46.5	46.5	42.2	34.5	26.8	44.3	2.4	44.3	44.3	44.3	40.9	33.1	25.2
		95°F								105°F							
750	77	41.6	2.7	20.3	16.5	12.8	-	-	-	38.4	3.0	20.0	16.1	12.3	-	-	-
	72	37.6	2.6	25.6	21.4	17.2	13.1	-	-	35.1	3.0	24.7	20.5	16.4	12.2	-	-
	67	33.7	2.6	30.9	26.3	21.7	17.4	13.2	-	31.8	3.0	29.4	24.9	20.5	16.3	12.1	-
	62	33.2	2.6	32.0	29.1	26.2	21.8	17.4	13.1	31.4	3.0	30.2	27.4	24.6	20.4	16.2	12.0
900	77	42.0	2.7	23.7	18.5	13.4	-	-	-	38.8	3.0	23.0	17.8	12.5	-	-	-
	72	38.7	2.6	28.3	23.4	18.5	13.6	-	-	36.0	3.0	27.1	22.3	17.4	12.6	-	-
	67	35.5	2.6	33.0	28.3	23.7	18.7	13.7	-	33.3	3.0	31.2	26.8	22.4	17.5	12.6	-
	62	35.0	2.6	34.0	31.4	28.9	23.8	18.7	13.6	33.0	3.0	32.0	29.7	27.4	22.4	17.4	12.4
	57	34.5	2.6	34.5	34.5	34.0	28.9	23.7	18.5	32.6	3.0	32.6	32.5	32.4	27.3	22.3	17.2
1050	77	42.4	2.7	27.1	20.5	13.9	-	-	-	39.2	3.0	26.1	19.4	12.7	-	-	-
	72	39.8	2.6	31.1	25.4	19.8	14.2	-	-	37.0	3.0	29.6	24.1	18.5	13.0	-	-
	67	37.2	2.6	35.0	30.4	25.7	20.0	14.3	-	34.8	3.0	33.1	28.7	24.4	18.7	13.0	-
	62	36.8	2.6	36.0	33.8	31.6	25.8	20.0	14.2	34.6	3.0	33.7	32.0	30.2	24.4	18.6	12.8
	57	36.4	2.6	36.4	36.4	36.4	31.6	25.7	19.8	34.3	3.0	34.3	34.3	34.3	30.1	24.2	18.3
1200	77	42.8	2.6	30.5	22.5	14.5	-	-	-	39.6	3.0	29.2	21.0	12.9	-	-	-
	72	40.9	2.6	33.8	27.5	21.1	14.7	-	-	38.0	3.0	32.0	25.8	19.6	13.4	-	-
	67	39.0	2.6	37.1	32.4	27.7	21.2	14.8	-	36.4	3.0	34.9	30.6	26.3	19.9	13.5	-
	62	38.7	2.6	38.0	36.1	34.2	27.7	21.2	14.7	36.1	3.0	35.4	34.2	33.0	26.4	19.8	13.2
	57	38.4	2.6	38.4	38.4	38.4	34.3	27.7	21.1	35.9	3.0	35.9	35.9	35.9	33.0	26.2	19.4
1350	72	42.0	2.6	36.6	29.5	22.4	15.3	-	-	38.9	3.0	34.5	27.6	20.7	13.8	-	-
	67	40.8	2.6	39.2	34.4	29.7	22.5	15.3	-	37.9	3.0	36.7	32.5	28.3	21.1	14.0	-
	62	40.5	2.6	40.0	38.5	36.9	29.7	22.5	15.3	37.7	3.0	37.2	36.5	35.9	28.5	21.1	13.6
	57	40.3	2.6	40.3	40.3	40.3	36.9	29.7	22.4	37.5	3.0	37.5	37.5	37.5	35.8	28.1	20.5
1500	72	43.1	2.6	39.3	31.5	23.7	15.8	-	-	39.9	3.0	36.9	29.3	21.8	14.2	-	-
	67	42.5	2.6	41.3	36.5	31.6	23.8	15.9	-	39.5	3.0	38.5	34.4	30.2	22.3	14.5	-
	62	42.4	2.6	42.0	40.8	39.6	31.7	23.8	15.9	39.3	3.0	38.9	38.8	38.7	30.5	22.3	14.1
	57	42.2	2.6	42.2	42.2	42.2	39.6	31.7	23.7	39.2	3.0	39.2	39.2	39.2	38.6	30.1	21.6

XYE04 (3.0 Ton) (Continued)

Air on Evaporator Coil		Temperature of Air on Condenser Coil															
		Total Capacity[1] (MBh)	Total Input (kW)[2]	Sensible Capacity (MBh) Return Dry Bulb (°F)						Total Capacity[1] (MBh)	Total Input (kW)[2]	Sensible Capacity (MBh) Return Dry Bulb (°F)					
CFM	WB (°F)			90	85	80	75	70	65			90	85	80	75	70	65
		115°F								125°F							
750	77	35.1	3.4	19.6	15.7	11.8	-	-	-	31.9	3.7	19.3	15.3	11.2	-	-	-
	72	32.5	3.4	23.8	19.7	15.5	11.3	-	-	29.9	3.7	23.0	18.8	14.6	10.4	-	-
	67	29.8	3.3	28.0	23.6	19.2	15.1	11.0	-	27.9	3.7	26.6	22.3	18.0	14.0	10.0	-
	62	29.6	3.3	28.4	25.7	22.9	18.9	15.0	11.0	27.8	3.7	26.6	24.0	21.3	17.5	13.7	9.9
900	77	35.5	3.4	22.4	17.0	11.6	-	-	-	32.2	3.7	21.7	16.2	10.7	-	-	-
	72	33.3	3.4	26.0	21.2	16.4	11.6	-	-	30.6	3.7	24.8	20.0	15.3	10.5	-	-
	67	31.1	3.4	29.5	25.3	21.1	16.3	11.4	-	29.0	3.7	27.8	23.8	19.8	15.1	10.3	-
	62	30.9	3.4	29.9	27.9	25.9	21.0	16.1	11.2	28.9	3.7	27.9	26.1	24.4	19.6	14.8	10.0
	57	30.7	3.4	30.3	30.3	30.3	25.7	20.8	15.9	28.8	3.7	27.9	27.9	27.9	24.2	19.4	14.5
1050	77	35.9	3.4	25.1	18.3	11.4	-	-	-	32.6	3.7	24.2	17.2	10.2	-	-	-
	72	34.2	3.4	28.1	22.7	17.2	11.8	-	-	31.3	3.7	26.6	21.3	16.0	10.6	-	-
	67	32.4	3.4	31.1	27.1	23.1	17.4	11.8	-	30.0	3.7	29.1	25.4	21.7	16.2	10.6	-
	62	32.3	3.4	31.4	30.1	28.9	23.1	17.3	11.5	30.0	3.7	29.1	28.3	27.5	21.7	15.9	10.1
	57	32.1	3.4	31.7	31.7	31.7	28.7	22.7	16.8	29.9	3.7	29.1	29.1	29.1	27.3	21.3	15.2
1200	77	36.3	3.4	27.9	19.6	11.3	-	-	-	33.0	3.7	26.6	18.1	9.6	-	-	-
	72	35.0	3.4	30.2	24.2	18.1	12.1	-	-	32.1	3.7	28.4	22.5	16.6	10.7	-	-
	67	33.7	3.4	32.6	28.8	25.0	18.6	12.2	-	31.1	3.7	30.3	27.0	23.6	17.3	10.9	-
	62	33.6	3.4	32.9	32.4	31.9	25.1	18.4	11.7	31.1	3.7	30.3	30.3	30.3	23.9	17.0	10.2
	57	33.5	3.4	33.2	33.2	33.2	31.7	24.7	17.6	31.0	3.7	30.3	30.3	30.3	30.3	23.2	15.9
1350	72	35.9	3.4	32.4	25.7	19.0	12.3	-	-	32.8	3.8	30.3	23.8	17.3	10.8	-	-
	67	35.1	3.4	34.1	30.5	26.9	19.8	12.6	-	32.2	3.8	31.6	28.6	25.5	18.4	11.3	-
	62	34.9	3.4	34.4	34.4	34.4	27.2	19.6	12.0	32.2	3.8	31.6	31.6	31.6	26.0	18.2	10.4
	57	34.8	3.4	34.6	34.6	34.6	34.6	26.6	18.5	32.1	3.7	31.6	31.6	31.6	31.6	25.1	16.6
1500	72	36.7	3.4	34.5	27.2	19.9	12.6	-	-	33.5	3.8	32.1	25.0	18.0	10.9	-	-
	67	36.4	3.4	35.6	32.2	28.8	20.9	13.0	-	33.3	3.8	32.8	30.1	27.4	19.5	11.6	-
	62	36.3	3.4	35.9	35.9	35.9	29.3	20.8	12.3	33.2	3.8	32.8	32.8	32.8	28.1	19.3	10.5
	57	36.2	3.4	36.1	36.1	36.1	36.1	28.5	19.4	33.2	3.7	32.8	32.8	32.8	32.8	27.0	17.3

1. These capacities are gross ratings. For net capacity, deduct the supply air blower motor heat (MBh = 3.415 x kW). Refer to the appropriate Blower Performance Table for the kW of the supply air blower motor.
2. These ratings include the condenser fan motors (total 1 kW) and the compressor motors but not the supply air blower motor.

XYE05 (4.0 Ton)

Air on Evaporator Coil		Temperature of Air on Condenser Coil															
		Total Capacity[1] (MBh)	Total Input (kW)[2]	Sensible Capacity (MBh) Return Dry Bulb (°F)						Total Capacity[1] (MBh)	Total Input (kW)[2]	Sensible Capacity (MBh) Return Dry Bulb (°F)					
CFM	WB (°F)			90	85	80	75	70	65			90	85	80	75	70	65
		75°F								85°F							
1000	77	64.4	2.8	32.4	27.2	22.0	-	-	-	60.0	3.1	30.3	25.2	20.1	-	-	-
	72	58.1	2.8	38.1	32.5	27.0	21.4	-	-	54.2	3.1	36.3	30.8	25.2	19.7	-	-
	67	51.8	2.8	43.8	37.9	31.9	26.3	20.9	-	48.5	3.1	42.2	36.3	30.4	24.8	19.4	-
	62	48.4	2.8	48.4	42.6	36.9	30.3	25.9	20.5	46.4	3.1	46.0	40.8	35.6	29.5	24.5	19.0
1200	77	64.4	2.8	35.0	28.4	21.8	-	-	-	60.3	3.1	33.7	26.9	20.1	-	-	-
	72	58.9	2.8	41.0	34.6	28.1	21.7	-	-	55.3	3.1	39.5	33.0	26.6	20.1	-	-
	67	53.5	2.8	47.1	40.8	34.5	27.9	21.5	-	50.2	3.1	45.2	39.1	33.0	26.4	20.0	-
	62	50.6	2.8	50.6	45.7	40.9	33.5	27.8	21.2	48.5	3.1	48.2	43.8	39.5	32.5	26.3	19.7
	57	47.6	2.8	50.6	47.6	47.3	40.7	34.0	27.4	46.7	3.1	58.2	46.7	45.9	39.3	32.6	26.0
1400	77	64.3	2.8	37.6	29.5	21.5	-	-	-	60.6	3.2	37.1	28.6	20.1	-	-	-
	72	59.8	2.8	44.0	36.6	29.3	22.0	-	-	56.3	3.1	42.6	35.3	27.9	20.5	-	-
	67	55.2	2.8	50.4	43.8	37.1	29.6	22.1	-	51.9	3.1	48.2	41.9	35.6	28.1	20.6	-
	62	52.8	2.8	52.8	48.9	45.0	36.7	29.6	22.0	50.6	3.1	50.4	46.9	43.4	35.4	28.1	20.4
	57	50.4	2.8	52.8	50.4	50.2	45.0	37.1	29.3	49.2	3.1	50.4	49.2	49.2	43.3	35.6	27.8
1600	77	64.3	2.8	40.2	30.7	21.2	-	-	-	60.9	3.2	40.5	30.4	20.2	-	-	-
	72	60.6	2.8	46.9	38.7	30.5	22.2	-	-	57.3	3.2	45.8	37.5	29.2	20.9	-	-
	67	56.9	2.8	53.6	46.7	39.8	31.2	22.8	-	53.7	3.1	51.1	44.7	38.2	29.7	21.2	-
	62	55.0	2.8	55.0	52.0	49.0	39.8	31.5	22.7	52.7	3.1	52.5	49.9	47.3	38.4	29.9	21.2
	57	53.1	2.8	55.0	53.1	53.1	49.3	40.2	31.2	51.7	3.1	52.5	51.7	51.7	47.4	38.5	29.6
1800	72	61.4	2.8	49.8	40.7	31.6	22.5	-	-	58.3	3.2	49.0	39.8	30.5	21.3	-	-
	67	58.6	2.8	56.9	49.6	42.4	32.9	23.4	-	55.4	3.1	54.1	47.5	40.9	31.3	21.9	-
	62	57.2	2.8	57.2	55.1	53.1	43.0	33.4	23.5	54.8	3.1	54.7	52.9	51.2	41.3	31.6	21.9
	57	55.8	2.8	57.2	55.8	55.8	53.6	43.4	33.1	54.2	3.1	54.7	54.2	54.2	51.5	41.4	31.4
2000	72	62.2	2.8	52.8	42.8	32.8	22.8	-	-	59.3	3.2	52.2	42.0	31.9	21.7	-	-
	67	60.3	2.8	58.5	52.6	45.0	34.5	24.0	-	57.1	3.2	57.0	50.3	43.5	33.0	22.5	-
	62	59.4	2.8	58.5	58.3	57.2	46.2	35.2	24.3	56.9	3.2	57.0	56.0	55.1	44.2	33.4	22.6
	57	58.5	2.8	58.5	58.5	58.5	57.9	46.5	35.0	56.7	3.2	57.0	56.7	56.7	55.5	44.4	33.2
		95°F								105°F							
1000	77	55.5	3.4	28.3	23.2	18.1	-	-	-	51.2	4.0	27.3	22.1	16.9	-	-	-
	72	50.4	3.5	34.5	29.0	23.5	18.0	-	-	46.7	4.0	33.2	27.6	22.1	16.6	-	-
	67	45.2	3.5	40.7	34.8	28.9	23.4	17.8	-	42.1	4.0	39.0	33.2	27.4	21.9	16.4	-
	62	44.4	3.5	43.6	39.0	34.3	28.7	23.1	17.5	41.6	3.9	41.1	36.9	32.7	27.1	21.6	16.1
1200	77	56.2	3.5	32.5	25.5	18.5	-	-	-	51.7	4.0	31.3	24.2	17.0	-	-	-
	72	51.6	3.5	37.9	31.4	25.0	18.5	-	-	47.7	4.0	36.3	29.9	23.5	17.0	-	-
	67	47.0	3.5	43.3	37.4	31.5	25.0	18.4	-	43.7	4.0	41.3	35.6	29.9	23.4	16.9	-
	62	46.4	3.5	45.8	41.9	38.0	31.4	24.8	18.2	43.4	3.9	43.0	39.7	36.4	29.8	23.2	16.7
	57	45.8	3.5	45.8	45.8	44.6	37.9	31.2	24.5	43.1	3.9	43.1	43.1	42.8	36.2	29.5	22.9
1400	77	56.8	3.5	36.7	27.8	18.8	-	-	-	52.3	4.0	35.4	26.2	17.1	-	-	-
	72	52.8	3.5	41.3	33.9	26.5	19.0	-	-	48.8	4.0	39.4	32.1	24.8	17.4	-	-
	67	48.7	3.5	45.9	40.0	34.1	26.6	19.1	-	45.4	4.0	43.5	38.0	32.4	24.9	17.5	-
	62	48.4	3.5	47.9	44.8	41.8	34.1	26.5	18.9	45.2	4.0	44.9	42.5	40.1	32.5	24.9	17.3
	57	48.1	3.5	48.1	48.1	48.1	41.7	34.0	26.3	45.0	3.9	45.0	45.0	45.0	40.0	32.2	24.5
1600	77	57.5	3.5	40.9	30.1	19.2	-	-	-	52.8	4.0	39.4	28.3	17.3	-	-	-
	72	54.0	3.5	44.8	36.4	28.0	19.6	-	-	49.9	4.0	42.6	34.3	26.1	17.8	-	-
	67	50.4	3.5	48.6	42.7	36.7	28.2	19.7	-	47.0	4.0	45.8	40.3	34.9	26.5	18.0	-
	62	50.4	3.5	50.1	47.8	45.5	36.9	28.2	19.6	47.0	4.0	46.8	45.2	43.7	35.1	26.5	17.8
	57	50.4	3.5	50.4	50.4	50.4	45.5	36.8	28.0	46.9	4.0	46.9	46.9	46.9	43.8	34.9	26.1
1800	72	55.1	3.5	48.2	38.8	29.5	20.1	-	-	51.0	4.0	45.7	36.6	27.4	18.2	-	-
	67	52.7	3.5	52.7	45.3	39.3	29.8	20.3	-	48.8	4.0	48.0	42.7	37.4	28.0	18.6	-
	62	52.7	3.5	52.7	50.7	49.2	39.6	29.9	20.3	48.8	4.0	48.6	48.0	47.4	37.8	28.1	18.4
	57	52.7	3.5	52.7	52.7	52.7	49.3	39.5	29.7	48.8	4.0	48.8	48.8	48.8	47.5	37.6	27.7
2000	72	56.3	3.5	51.6	41.3	30.9	20.6	-	-	52.0	4.0	48.9	38.8	28.7	18.6	-	-
	67	55.0	3.5	55.0	47.9	42.0	31.5	21.0	-	50.8	4.0	50.3	45.1	39.9	29.5	19.1	-
	62	55.0	3.5	55.0	53.7	53.0	42.3	31.6	21.0	50.8	4.0	50.5	50.5	50.5	40.4	29.7	19.0
	57	55.0	3.5	55.0	55.0	55.0	53.1	42.3	31.5	50.8	4.0	50.8	50.8	50.8	50.8	40.3	29.3

XYE05 (4.0 Ton) (Continued)

Air on Evaporator Coil		Temperature of Air on Condenser Coil															
		Total Capacity[1] (MBh)	Total Input (kW)[2]	Sensible Capacity (MBh) Return Dry Bulb (°F)						Total Capacity[1] (MBh)	Total Input (kW)[2]	Sensible Capacity (MBh) Return Dry Bulb (°F)					
CFM	WB (°F)			90	85	80	75	70	65			90	85	80	75	70	65
		115°F								125°F							
1000	77	46.9	4.5	26.2	20.9	15.7	-	-	-	42.6	5.0	25.2	19.8	14.4	-	-	-
	72	42.9	4.4	31.8	26.3	20.8	15.3	-	-	39.2	4.9	30.5	25.0	19.4	13.9	-	-
	67	38.9	4.4	37.4	31.7	25.9	20.4	14.9	-	36.1	4.9	35.8	30.1	24.4	19.0	13.5	-
	62	38.9	4.4	38.6	34.8	31.1	25.6	20.1	14.6	36.1	4.9	36.1	32.8	29.4	24.0	18.6	13.2
1200	77	47.3	4.5	30.1	22.8	15.5	-	-	-	42.8	5.0	28.9	21.5	14.1	-	-	-
	72	43.9	4.5	34.7	28.3	21.9	15.5	-	-	40.0	4.9	33.1	26.7	20.4	14.1	-	-
	67	40.5	4.4	39.3	33.8	28.3	21.9	15.4	-	37.6	4.9	37.2	32.0	26.7	20.3	13.9	-
	62	40.4	4.4	40.2	37.5	34.7	28.2	21.7	15.1	37.6	4.9	37.4	35.2	33.0	26.6	20.1	13.6
	57	40.3	4.4	40.3	40.3	40.3	34.5	27.9	21.3	37.6	4.9	37.6	37.6	37.6	32.8	26.2	19.7
1400	77	47.7	4.5	34.0	24.7	15.4	-	-	-	43.1	5.0	32.6	23.2	13.7	-	-	-
	72	44.8	4.5	37.6	30.3	23.1	15.8	-	-	40.9	4.9	35.7	28.5	21.4	14.2	-	-
	67	42.0	4.4	41.1	35.9	30.7	23.3	15.9	-	38.8	4.9	38.7	33.8	29.0	21.7	14.3	-
	62	42.0	4.4	41.8	40.1	38.3	30.8	23.2	15.6	38.8	4.9	38.8	37.7	36.6	29.1	21.5	14.0
	57	41.9	4.4	41.9	41.9	41.9	38.2	30.5	22.8	38.8	4.9	38.8	38.8	38.8	36.5	28.8	21.0
1600	77	48.0	4.5	37.9	26.6	15.3	-	-	-	43.3	5.0	36.4	24.9	13.4	-	-	-
	72	45.8	4.5	40.4	32.3	24.2	16.1	-	-	41.7	5.0	38.3	30.3	22.3	14.4	-	-
	67	43.6	4.5	43.0	38.0	33.1	24.7	16.4	-	40.2	4.9	40.2	35.7	31.3	23.0	14.7	-
	62	43.5	4.4	43.4	42.7	42.0	33.4	24.7	16.1	40.1	4.9	40.2	40.1	40.1	31.6	23.0	14.4
	57	43.5	4.4	43.5	43.5	43.5	42.0	33.1	24.2	40.0	4.9	40.2	40.1	40.1	40.0	31.3	22.3
1800	72	46.8	4.5	43.3	34.3	25.3	16.4	-	-	42.6	5.0	40.8	32.1	23.3	14.5	-	-
	67	45.1	4.5	44.8	40.2	35.5	26.2	16.8	-	41.6	4.9	41.6	37.6	33.6	24.3	15.1	-
	62	45.1	4.4	45.0	45.0	45.0	36.0	26.3	16.6	41.4	4.9	41.6	41.4	41.4	34.2	24.5	14.8
	57	45.0	4.4	45.0	45.0	45.0	45.0	35.7	25.7	41.2	4.9	41.6	41.4	41.4	41.2	33.8	23.7
2000	72	47.7	4.5	46.2	36.3	26.5	16.7	-	-	43.4	5.0	43.4	33.8	24.3	14.7	-	-
	67	46.7	4.5	46.6	42.3	37.9	27.6	17.3	-	43.1	5.0	43.4	39.5	35.9	25.7	15.5	-
	62	46.6	4.5	46.6	46.6	46.6	38.6	27.8	17.1	42.7	4.9	43.4	42.7	42.7	36.7	25.9	15.2
	57	46.6	4.5	46.6	46.6	46.6	46.6	38.3	27.2	42.4	4.9	43.4	42.7	42.7	42.4	36.3	25.0

1. These capacities are gross ratings. For net capacity, deduct the supply air blower motor heat (MBh = 3.415 x kW). Refer to the appropriate Blower Performance Table for the kW of the supply air blower motor.
2. These ratings include the condenser fan motors (total 1 kW) and the compressor motors but not the supply air blower motor.

XYE06 (5.0 Ton)

Air on Evaporator Coil		Temperature of Air on Condenser Coil															
		Total Capacity[1] (MBh)	Total Input (kW)[2]	Sensible Capacity (MBh) Return Dry Bulb (°F)						Total Capacity[1] (MBh)	Total Input (kW)[2]	Sensible Capacity (MBh) Return Dry Bulb (°F)					
CFM	WB (°F)			90	85	80	75	70	65			90	85	80	75	70	65
		75°F								85°F							
1250	77	78.6	3.5	37.8	32.2	26.6	-	-	-	74.1	4.0	36.2	29.9	23.6	-	-	-
	72	71.8	3.4	46.7	40.1	33.5	26.8	-	-	67.6	3.9	45.3	38.2	31.1	24.0	-	-
	67	64.9	3.4	55.7	48.0	40.4	33.4	26.8	-	61.1	3.8	54.5	46.6	38.6	31.4	24.3	-
	62	62.4	3.4	54.9	51.1	47.3	37.4	33.4	26.4	59.3	3.8	55.2	50.6	46.1	37.4	31.6	24.4
1500	77	79.7	3.5	43.5	35.2	26.9	-	-	-	74.9	4.0	42.0	33.0	24.0	-	-	-
	72	73.8	3.5	51.6	43.5	35.4	27.2	-	-	69.2	3.9	49.8	41.4	33.0	24.5	-	-
	67	67.9	3.4	59.7	51.8	43.8	35.4	27.3	-	63.6	3.8	57.6	49.8	42.0	33.4	24.9	-
	62	65.8	3.4	59.7	56.0	52.3	41.6	35.6	27.2	62.0	3.8	58.5	54.7	51.0	41.2	33.7	25.1
	57	63.7	3.4	59.7	59.7	59.7	52.3	43.8	35.3	60.5	3.8	59.3	59.3	59.3	51.3	42.5	33.8
1750	77	80.7	3.5	49.3	38.2	27.2	-	-	-	75.7	4.0	47.8	36.0	24.3	-	-	-
	72	75.8	3.5	56.5	46.9	37.2	27.6	-	-	70.9	3.9	54.3	44.6	34.8	25.1	-	-
	67	70.8	3.4	63.8	55.5	47.3	37.4	27.9	-	66.0	3.8	60.8	53.1	45.3	35.4	25.6	-
	62	69.2	3.4	64.5	60.9	57.3	45.8	37.7	28.0	64.7	3.8	61.8	58.8	55.9	45.0	35.8	25.8
	57	67.5	3.4	65.2	65.2	65.2	57.5	47.6	37.8	63.3	3.8	62.7	62.7	62.7	56.2	46.1	35.9
2000	77	81.7	3.5	55.0	41.3	27.5	-	-	-	76.5	4.0	53.6	39.1	24.6	-	-	-
	72	77.8	3.5	61.4	50.3	39.1	28.0	-	-	72.5	3.9	58.8	47.7	36.6	25.6	-	-
	67	73.8	3.4	67.9	59.3	50.7	39.5	28.4	-	68.5	3.9	64.0	56.3	48.7	37.4	26.2	-
	62	72.5	3.4	69.3	65.8	62.3	50.0	39.9	28.8	67.3	3.9	65.1	62.9	60.8	48.8	37.9	26.5
	57	71.3	3.4	70.7	70.7	70.7	62.7	51.5	40.3	66.1	3.8	66.1	66.1	66.1	61.2	49.6	38.0
2250	72	79.7	3.5	66.3	53.7	41.0	28.4	-	-	74.2	3.9	63.3	50.9	38.5	26.1	-	-
	67	76.7	3.5	71.9	63.0	54.1	41.5	28.9	-	71.0	3.9	67.1	59.6	52.1	39.4	26.8	-
	62	75.9	3.4	74.1	70.7	67.3	54.1	42.1	29.5	70.0	3.9	68.4	67.0	65.6	52.5	40.0	27.2
	57	75.1	3.4	75.1	75.1	75.1	67.9	55.3	42.8	69.0	3.9	69.0	69.0	69.0	66.2	53.2	40.1
2500	72	81.7	3.5	71.2	57.0	42.9	28.7	-	-	75.8	3.9	67.7	54.0	40.3	26.6	-	-
	67	79.7	3.5	76.0	66.8	57.6	43.5	29.4	-	73.4	3.9	70.3	62.8	55.4	41.4	27.5	-
	62	79.3	3.5	78.9	75.6	72.3	58.3	44.3	30.3	72.6	3.9	71.7	71.1	70.5	56.3	42.1	27.9
	57	78.9	3.5	78.9	78.9	78.9	73.1	59.2	45.3	71.8	3.9	71.8	71.8	71.8	71.2	56.7	42.2
		95°F								105°F							
1250	77	69.5	4.5	34.5	27.6	20.7	-	-	-	63.2	5.1	34.2	27.1	20.0	-	-	-
	72	63.4	4.4	43.9	36.4	28.8	21.2	-	-	58.3	5.0	42.1	34.7	27.4	20.0	-	-
	67	57.2	4.2	53.3	45.1	36.9	29.3	21.8	-	53.4	4.9	50.0	42.4	34.8	27.5	20.2	-
	62	56.3	4.2	55.4	50.2	45.0	37.4	29.9	22.4	52.7	4.8	51.9	47.0	42.1	34.9	27.7	20.5
1500	77	70.1	4.5	40.4	30.7	21.0	-	-	-	64.1	5.0	39.5	29.7	19.8	-	-	-
	72	64.7	4.4	48.0	39.3	30.6	21.9	-	-	59.8	5.0	45.9	37.4	28.9	20.4	-	-
	67	59.2	4.2	55.6	47.9	40.2	31.3	22.5	-	55.5	4.9	52.3	45.1	38.0	29.4	20.8	-
	62	58.2	4.2	57.2	53.5	49.7	40.8	31.9	23.0	54.8	4.8	53.9	50.5	47.1	38.4	29.7	20.9
	57	57.2	4.2	57.2	57.2	57.2	50.3	41.3	32.2	54.0	4.8	54.0	54.0	54.0	47.4	38.5	29.7
1750	77	70.7	4.4	46.3	33.8	21.3	-	-	-	65.0	5.0	44.9	32.3	19.7	-	-	-
	72	66.0	4.4	52.1	42.2	32.4	22.5	-	-	61.3	5.0	49.7	40.1	30.5	20.9	-	-
	67	61.2	4.3	57.8	50.6	43.4	33.4	23.3	-	57.6	4.9	54.5	47.9	41.3	31.4	21.4	-
	62	60.2	4.2	59.0	56.8	54.5	44.2	33.9	23.6	56.8	4.9	55.9	54.0	52.1	41.8	31.6	21.3
	57	59.1	4.2	59.1	59.1	59.1	55.0	44.5	34.0	56.0	4.8	56.0	56.0	56.0	52.3	41.7	31.2
2000	77	71.3	4.4	52.2	36.9	21.6	-	-	-	65.8	5.0	50.2	34.9	19.5	-	-	-
	72	67.3	4.3	56.1	45.1	34.2	23.2	-	-	62.7	5.0	53.5	42.8	32.0	21.3	-	-
	67	63.2	4.3	60.0	53.4	46.7	35.4	24.0	-	59.7	4.9	56.8	50.7	44.5	33.3	22.0	-
	62	62.1	4.3	60.9	60.0	59.2	47.6	35.9	24.2	58.9	4.9	57.8	57.5	57.1	45.3	33.5	21.7
	57	61.0	4.3	61.0	61.0	61.0	59.8	47.7	35.7	58.1	4.9	58.1	58.1	58.1	57.3	45.0	32.7
2250	72	68.6	4.3	60.2	48.1	35.9	23.8	-	-	64.2	5.0	57.3	45.4	33.6	21.7	-	-
	67	65.2	4.3	62.3	56.1	50.0	37.4	24.8	-	61.7	4.9	59.0	53.4	47.8	35.2	22.7	-
	62	64.1	4.3	62.7	62.7	62.7	50.9	37.9	24.8	60.9	4.9	59.8	59.8	59.8	48.7	35.4	22.1
	57	62.9	4.3	62.9	62.9	62.9	62.9	51.0	37.5	60.1	4.9	60.1	60.1	60.1	60.1	48.2	34.2
2500	72	69.9	4.3	64.3	51.0	37.7	24.5	-	-	65.7	4.9	61.1	48.1	35.1	22.2	-	-
	67	67.2	4.3	64.5	58.9	53.2	39.4	25.5	-	63.8	4.9	61.3	56.2	51.1	37.2	23.3	-
	62	66.0	4.3	64.5	64.5	64.5	54.3	39.9	25.4	63.0	4.9	61.8	61.8	61.8	52.2	37.4	22.6
	57	64.8	4.3	64.5	64.5	64.5	64.5	54.2	39.2	62.1	4.9	62.1	62.1	62.1	62.1	51.5	35.7

XYE06 (5.0 Ton) (Continued)

Air on Evaporator Coil		Temperature of Air on Condenser Coil															
		Total Capacity[1] (MBh)	Total Input (kW)[2]	Sensible Capacity (MBh)						Total Capacity[1] (MBh)	Total Input (kW)[2]	Sensible Capacity (MBh)					
CFM	WB (°F)			Return Dry Bulb (°F)								Return Dry Bulb (°F)					
				90	85	80	75	70	65			90	85	80	75	70	65
		115°F								125°F							
1250	77	56.9	5.7	33.9	26.6	19.3	-	-	-	50.6	6.2	33.6	26.1	18.6	-	-	-
	72	53.3	5.6	40.3	33.1	26.0	18.8	-	-	48.2	6.2	38.5	31.5	24.6	17.6	-	-
	67	49.7	5.5	46.7	39.7	32.6	25.6	18.6	-	45.9	6.1	43.4	37.0	30.5	23.7	17.0	-
	62	49.2	5.4	48.5	43.9	39.3	32.4	25.6	18.7	45.7	6.1	45.0	40.7	36.4	29.9	23.4	16.9
1500	77	58.0	5.6	38.7	28.7	18.7	-	-	-	52.0	6.2	37.8	27.6	17.5	-	-	-
	72	54.9	5.6	43.8	35.5	27.3	19.0	-	-	50.0	6.2	41.7	33.7	25.6	17.6	-	-
	67	51.8	5.5	49.0	42.4	35.9	27.5	19.1	-	48.1	6.1	45.7	39.7	33.7	25.5	17.3	-
	62	51.3	5.5	50.6	47.5	44.5	35.9	27.4	18.9	47.9	6.1	47.3	44.6	41.9	33.5	25.2	16.8
	57	50.9	5.4	50.9	50.9	50.9	44.4	35.8	27.1	47.7	6.1	47.7	47.7	47.7	41.5	33.0	24.5
1750	77	59.2	5.6	43.4	30.7	18.0	-	-	-	53.4	6.2	42.0	29.2	16.4	-	-	-
	72	56.6	5.6	47.3	38.0	28.6	19.2	-	-	51.8	6.2	45.0	35.8	26.7	17.6	-	-
	67	54.0	5.5	51.2	45.2	39.1	29.3	19.6	-	50.3	6.1	47.9	42.5	37.0	27.3	17.7	-
	62	53.5	5.5	52.7	51.2	49.7	39.5	29.3	19.1	50.2	6.1	49.5	48.4	47.3	37.1	27.0	16.8
	57	53.0	5.5	53.0	53.0	53.0	49.6	39.0	28.4	50.0	6.1	50.0	50.0	50.0	46.9	36.2	25.6
2000	77	60.3	5.6	48.2	32.8	17.4	-	-	-	54.8	6.2	46.2	30.7	15.3	-	-	-
	72	58.2	5.6	50.8	40.4	29.9	19.4	-	-	53.7	6.2	48.2	38.0	27.8	17.6	-	-
	67	56.1	5.5	53.5	47.9	42.4	31.2	20.0	-	52.5	6.1	50.2	45.2	40.2	29.1	18.1	-
	62	55.6	5.5	54.8	54.8	54.8	43.0	31.1	19.3	52.4	6.1	51.8	51.8	51.8	40.7	28.8	16.8
	57	55.2	5.5	55.2	55.2	55.2	54.8	42.2	29.7	52.3	6.1	52.3	52.3	52.3	52.3	39.5	26.6
2250	72	59.8	5.6	54.4	42.8	31.2	19.6	-	-	55.5	6.2	51.4	40.1	28.8	17.6	-	-
	67	58.3	5.5	55.7	50.7	45.6	33.1	20.5	-	54.8	6.2	52.5	48.0	43.5	31.0	18.4	-
	62	57.8	5.5	57.0	57.0	57.0	46.5	33.0	19.5	54.7	6.1	54.1	54.1	54.1	44.4	30.6	16.8
	57	57.3	5.5	57.3	57.3	57.3	57.3	45.5	31.0	54.5	6.1	54.5	54.5	54.5	54.5	42.7	27.7
2500	72	61.5	5.6	57.9	45.2	32.5	19.8	-	-	57.3	6.2	54.7	42.3	29.9	17.5	-	-
	67	60.4	5.6	58.0	53.4	48.9	35.0	21.0	-	57.0	6.2	54.7	50.7	46.7	32.8	18.8	-
	62	59.9	5.6	59.1	59.1	59.1	50.1	34.9	19.7	56.9	6.2	56.3	56.3	56.3	48.0	32.4	16.8
	57	59.5	5.6	59.5	59.5	59.5	59.5	48.7	32.2	56.8	6.2	56.8	56.8	56.8	56.8	46.0	28.8

1. These capacities are gross ratings. For net capacity, deduct the supply air blower motor heat (MBh = 3.415 x kW). Refer to the appropriate Blower Performance Table for the kW of the supply air blower motor.
2. These ratings include the condenser fan motors (total 1 kW) and the compressor motors but not the supply air blower motor.

XYE07 (6.0 Ton)

Air on Evaporator Coil		Temperature of Air on Condenser Coil															
		Total Capacity[1] (MBh)	Total Input (kW)[2]	Sensible Capacity (MBh) Return Dry Bulb (°F)						Total Capacity[1] (MBh)	Total Input (kW)[2]	Sensible Capacity (MBh) Return Dry Bulb (°F)					
CFM	WB (°F)			90	85	80	75	70	65			90	85	80	75	70	65
		75°F								85°F							
1500	77	82.3	4.3	36.3	29.0	22.7	-	-	-	81.3	4.8	36.6	30.2	23.8	-	-	-
	72	79.0	4.2	48.0	41.6	35.3	28.9	-	-	76.2	4.7	47.7	41.3	34.9	28.5	-	-
	67	75.7	4.2	59.6	54.2	47.8	41.5	35.1	-	71.1	4.7	58.7	52.3	45.9	39.5	33.1	-
	62	68.8	4.1	68.8	68.1	56.8	50.5	44.1	37.8	65.3	4.7	65.3	65.0	54.9	48.5	42.1	35.7
1800	77	85.3	4.3	39.5	32.2	24.9	-	-	-	84.0	4.8	40.8	33.4	26.0	-	-	-
	72	81.8	4.2	53.3	46.0	38.6	31.3	-	-	78.8	4.7	52.8	45.5	38.1	30.7	-	-
	67	78.4	4.1	67.1	59.7	52.4	45.0	37.7	-	73.5	4.7	64.9	57.5	50.1	42.7	35.3	-
	62	71.2	4.1	71.2	70.8	62.2	54.9	47.5	40.2	67.5	4.6	67.5	67.3	59.9	52.5	45.1	37.7
	57	73.4	4.1	73.4	71.8	64.0	56.6	49.3	41.9	69.2	4.6	69.2	68.4	61.0	53.6	46.3	38.9
2100	77	88.2	4.3	42.8	35.4	27.0	-	-	-	86.7	4.8	45.0	36.6	28.2	-	-	-
	72	84.7	4.2	58.6	50.3	42.0	33.6	-	-	81.3	4.7	58.0	49.7	41.3	32.9	-	-
	67	81.1	4.1	74.5	65.3	56.9	48.6	40.3	-	75.9	4.7	71.1	62.7	54.3	46.0	37.6	-
	62	73.7	4.1	73.7	73.5	67.6	59.3	51.0	42.6	69.7	4.6	69.7	69.6	64.9	56.6	48.2	39.8
	57	75.9	4.1	75.9	75.1	69.5	61.2	52.9	44.5	71.5	4.6	71.5	71.1	66.2	57.8	49.4	41.0
2400	77	91.2	4.3	46.0	38.5	29.2	-	-	-	89.5	4.8	49.1	39.7	30.4	-	-	-
	72	87.5	4.2	64.0	54.7	45.3	36.0	-	-	83.9	4.7	63.2	53.8	44.5	35.1	-	-
	67	83.8	4.1	81.9	70.8	61.5	52.1	42.8	-	78.3	4.6	77.3	68.0	58.6	49.2	39.8	-
	62	76.2	4.1	76.2	76.2	73.0	63.7	54.4	45.1	71.9	4.6	71.9	71.9	70.0	60.6	51.2	41.8
	57	78.5	4.0	78.5	78.5	75.1	65.7	56.4	47.1	73.7	4.6	73.7	73.7	71.3	61.9	52.5	43.1
2700	72	88.4	4.2	67.3	57.4	47.5	37.6	-	-	85.1	4.7	67.5	57.3	47.2	37.1	-	-
	67	84.7	4.1	83.7	74.4	64.5	54.6	44.7	-	79.4	4.6	79.0	72.3	62.2	52.0	41.9	-
	62	76.9	4.1	76.9	76.9	75.4	65.5	55.6	45.7	73.0	4.6	73.0	73.0	72.0	61.9	51.8	41.6
	57	79.3	4.0	79.3	79.3	77.6	67.7	57.8	47.9	74.8	4.6	74.8	74.8	73.6	63.5	53.3	43.2
3000	72	89.2	4.1	70.7	60.2	49.7	39.3	-	-	86.4	4.7	71.7	60.8	49.9	39.1	-	-
	67	85.5	4.1	85.5	78.0	67.5	57.1	46.6	-	80.6	4.6	80.6	76.6	65.8	54.9	44.0	-
	62	77.7	4.0	77.7	77.7	77.7	67.2	56.8	46.3	74.0	4.6	74.0	74.0	74.0	63.2	52.3	41.4
	57	80.1	4.0	80.1	80.1	80.1	69.6	59.1	48.7	75.9	4.5	75.9	75.9	75.9	65.0	54.2	43.3
		95°F								105°F							
1500	77	80.3	5.3	36.9	31.3	24.9	-	-	-	74.5	5.9	32.7	29.0	22.6	-	-	-
	72	73.4	5.3	47.3	40.9	34.5	28.0	-	-	68.2	5.9	44.9	38.5	32.2	25.8	-	-
	67	66.5	5.2	57.8	50.4	44.0	37.6	31.1	-	61.8	5.9	57.1	48.1	41.8	35.4	29.1	-
	62	61.9	5.2	61.9	61.9	52.9	46.5	40.0	33.6	58.5	5.9	58.5	58.3	48.8	42.4	36.1	29.7
1800	77	82.8	5.3	42.0	34.6	27.1	-	-	-	76.7	5.9	39.5	32.1	24.7	-	-	-
	72	75.7	5.3	52.4	44.9	37.5	30.0	-	-	70.2	5.9	50.0	42.6	35.2	27.8	-	-
	67	68.6	5.2	62.8	55.3	47.9	40.4	33.0	-	63.7	5.9	60.5	53.1	45.7	38.3	30.9	-
	62	63.8	5.2	63.8	63.8	57.6	50.2	42.7	35.3	60.2	5.8	60.2	60.1	53.3	45.9	38.5	31.1
	57	65.1	5.1	65.1	65.1	58.1	50.7	43.2	35.8	60.9	5.8	60.9	60.7	53.6	46.2	38.8	31.4
2100	77	85.3	5.3	47.1	37.8	29.3	-	-	-	78.9	5.9	46.4	35.3	26.8	-	-	-
	72	78.0	5.2	57.5	49.0	40.5	32.1	-	-	72.2	5.9	55.1	46.7	38.2	29.8	-	-
	67	70.7	5.2	67.8	60.2	51.8	43.3	34.9	-	65.5	5.8	63.9	58.1	49.6	41.1	32.7	-
	62	65.8	5.2	65.8	65.8	62.3	53.8	45.4	36.9	62.0	5.8	62.0	61.9	57.9	49.4	41.0	32.5
	57	67.0	5.1	67.0	67.0	62.8	54.4	45.9	37.5	62.6	5.8	62.6	62.6	58.2	49.7	41.2	32.8
2400	77	87.8	5.3	52.3	41.0	31.5	-	-	-	81.1	5.9	53.2	38.5	28.9	-	-	-
	72	80.3	5.2	62.5	53.0	43.6	34.1	-	-	74.2	5.8	60.3	50.8	41.2	31.7	-	-
	67	72.8	5.2	72.8	65.1	55.7	46.2	36.7	-	67.3	5.8	67.3	63.0	53.5	44.0	34.5	-
	62	67.7	5.1	67.7	67.7	66.9	57.5	48.0	38.5	63.7	5.8	63.7	63.7	62.4	52.9	43.4	33.9
	57	69.0	5.1	69.0	69.0	67.5	58.1	48.6	39.1	64.4	5.8	64.4	64.4	62.7	53.2	43.7	34.2
2700	72	81.9	5.2	67.6	57.2	46.9	36.5	-	-	75.4	5.8	65.0	54.6	44.2	33.8	-	-
	67	74.2	5.2	74.2	70.2	59.8	49.5	39.1	-	68.4	5.8	68.4	66.1	57.4	47.0	36.6	-
	62	69.1	5.1	69.1	69.1	68.7	58.3	47.9	37.6	64.7	5.8	64.7	64.7	64.0	53.6	43.2	32.8
	57	70.4	5.1	70.4	70.4	69.7	59.3	48.9	38.5	65.4	5.7	65.4	65.4	64.5	54.1	43.7	33.3
3000	72	83.5	5.2	72.7	61.4	50.1	38.8	-	-	76.5	5.8	69.7	58.4	47.2	35.9	-	-
	67	75.7	5.1	75.7	75.3	64.0	52.7	41.5	-	69.4	5.8	69.4	69.2	61.2	49.9	38.6	-
	62	70.4	5.1	70.4	70.4	70.4	59.1	47.9	36.6	65.6	5.8	65.6	65.6	65.6	54.3	43.1	31.8
	57	71.8	5.1	71.8	71.8	71.8	60.5	49.2	37.9	66.3	5.7	66.3	66.3	66.3	55.1	43.8	32.5

XYE07 (6.0 Ton) (Continued)

Air on Evaporator Coil		Temperature of Air on Condenser Coil															
		Total Capacity[1] (MBh)	Total Input (kW)[2]	Sensible Capacity (MBh) Return Dry Bulb (°F)						Total Capacity[1] (MBh)	Total Input (kW)[2]	Sensible Capacity (MBh) Return Dry Bulb (°F)					
CFM	WB (°F)			90	85	80	75	70	65			90	85	80	75	70	65
		115°F								125°F							
1500	77	68.7	6.6	28.5	26.6	20.3	-	-	-	62.9	7.2	27.7	23.0	18.0	-	-	-
	72	62.9	6.5	42.5	36.2	29.9	23.7	-	-	57.7	7.2	40.0	33.8	27.7	21.5	-	-
	67	57.1	6.5	56.4	45.8	39.6	33.3	27.0	-	52.4	7.2	52.4	43.5	37.3	31.1	25.0	-
	62	55.1	6.5	55.1	54.8	44.6	38.3	32.1	25.8	51.7	7.2	51.7	51.2	40.4	34.3	28.1	21.9
1800	77	70.7	6.5	37.1	29.7	22.3	-	-	-	64.6	7.2	36.8	27.3	19.9	-	-	-
	72	64.7	6.5	47.7	40.3	32.9	25.5	-	-	59.2	7.1	45.3	37.9	30.6	23.3	-	-
	67	58.7	6.5	58.2	50.9	43.5	36.1	28.8	-	53.8	7.1	53.8	48.6	41.3	34.0	26.6	-
	62	56.6	6.5	56.6	56.4	49.0	41.7	34.3	26.9	53.0	7.1	53.0	52.7	44.8	37.4	30.1	22.8
	57	56.7	6.5	56.7	56.4	49.0	41.7	34.3	26.9	52.5	7.1	52.5	52.1	44.5	37.2	29.9	22.5
2100	77	72.6	6.5	45.6	32.8	24.4	-	-	-	66.3	7.1	45.9	31.5	21.9	-	-	-
	72	66.4	6.5	52.8	44.4	35.9	27.4	-	-	60.7	7.1	50.5	42.1	33.6	25.1	-	-
	67	60.3	6.5	60.1	55.9	47.4	39.0	30.5	-	55.1	7.1	55.1	53.8	45.3	36.8	28.3	-
	62	58.2	6.5	58.2	58.1	53.5	45.0	36.6	28.1	54.4	7.1	54.4	54.2	49.1	40.6	32.2	23.7
	57	58.2	6.4	58.2	58.1	53.5	45.0	36.6	28.1	53.9	7.1	53.9	53.7	48.8	40.4	31.9	23.4
2400	77	74.5	6.5	54.1	36.0	26.4	-	-	-	67.9	7.1	55.1	35.8	23.8	-	-	-
	72	68.2	6.5	58.0	48.5	38.9	29.3	-	-	62.2	7.1	55.8	46.2	36.5	26.9	-	-
	67	61.9	6.4	61.9	61.0	51.4	41.8	32.3	-	56.5	7.1	56.5	56.5	49.3	39.6	30.0	-
	62	59.7	6.4	59.7	59.7	58.0	48.4	38.8	29.2	55.8	7.1	55.8	55.8	53.5	43.8	34.2	24.6
	57	59.8	6.4	59.8	59.8	57.9	48.4	38.8	29.2	55.2	7.1	55.2	55.2	53.2	43.5	33.9	24.3
2700	72	68.9	6.4	62.4	52.0	41.5	31.1	-	-	62.3	7.1	59.8	49.3	38.9	28.4	-	-
	67	62.5	6.4	62.5	62.0	54.9	44.5	34.0	-	56.6	7.1	56.6	56.6	52.4	42.0	31.5	-
	62	60.3	6.4	60.3	60.3	59.4	49.0	38.5	28.1	55.9	7.1	55.9	55.9	54.8	44.3	33.8	23.4
	57	60.4	6.4	60.4	60.4	59.4	49.0	38.6	28.1	55.3	7.1	55.3	55.3	54.3	43.9	33.4	22.9
3000	72	69.5	6.4	66.8	55.5	44.2	32.9	-	-	62.5	7.1	62.5	52.5	41.2	29.9	-	-
	67	63.1	6.4	63.1	63.1	58.4	47.1	35.8	-	56.8	7.1	56.8	56.8	55.6	44.3	33.0	-
	62	60.9	6.4	60.9	60.9	60.9	49.6	38.3	27.0	56.1	7.1	56.1	56.1	56.1	44.8	33.5	22.1
	57	60.9	6.4	60.9	60.9	60.9	49.6	38.3	27.0	55.5	7.1	55.5	55.5	55.5	44.2	32.9	21.6

1. These capacities are gross ratings. For net capacity, deduct the supply air blower motor heat (MBh = 3.415 x kW). Refer to the appropriate Blower Performance Table for the kW of the supply air blower motor.
2. These ratings include the condenser fan motors (total 1 kW) and the compressor motors but not the supply air blower motor.

XYEA7 (6.0 Ton)

Air on Evaporator Coil		Temperature of Air on Condenser Coil															
		Total Capacity[1] (MBh)	Total Input (kW)[2]	Sensible Capacity (MBh) Return Dry Bulb (°F)						Total Capacity[1] (MBh)	Total Input (kW)[2]	Sensible Capacity (MBh) Return Dry Bulb (°F)					
CFM	WB (°F)			90	85	80	75	70	65			90	85	80	75	70	65
		75°F								85°F							
1500	77	90.7	4.1	43.2	36.5	29.9	-	-	-	86.4	4.6	41.4	34.9	28.3	-	-	-
	72	82.7	4.0	53.0	45.0	37.1	29.1	-	-	78.3	4.5	51.3	43.4	35.5	27.6	-	-
	67	74.7	4.0	62.7	53.5	44.3	35.6	28.3	-	70.3	4.4	61.2	51.9	42.7	34.4	26.8	-
	62	72.7	3.9	64.3	57.8	51.5	40.4	35.3	27.3	71.1	4.4	61.6	55.7	49.8	40.3	33.9	25.9
1800	77	91.7	4.1	49.0	39.0	29.0	-	-	-	87.5	4.6	48.0	37.8	27.7	-	-	-
	72	84.7	4.0	57.1	47.8	38.623	29.4	-	-	80.3	4.5	55.6	46.3	37.1	27.8	-	-
	67	77.7	4.0	65.2	56.7	48.3	38.2	29.2	-	73.2	4.5	63.1	54.8	46.5	36.8	27.6	-
	62	73.4	4.0	67.8	62.8	57.9	45.6	38.2	28.4	71.4	4.4	65.0	60.5	55.9	45.0	36.5	26.8
	57	60.7	3.9	60.7	60.7	60.7	57.4	47.2	37.1	59.4	4.4	59.4	59.4	59.4	55.4	45.5	35.5
2100	77	92.6	4.1	54.8	41.4	28.1	-	-	-	88.6	4.6	54.6	40.8	27.0	-	-	-
	72	86.7	4.0	61.2	50.7	40.2	29.7	-	-	82.4	4.5	59.9	49.3	38.7	28.1	-	-
	67	80.7	4.0	67.6	59.9	52.2	40.8	30.1	-	76.2	4.5	65.1	57.7	50.3	39.1	28.3	-
	62	74.1	4.0	71.3	67.8	64.3	50.9	41.1	29.5	71.7	4.5	68.5	65.3	62.0	49.6	39.1	27.7
	57	61.2	4.0	61.2	61.2	61.2	59.5	52.1	39.9	59.7	4.5	59.7	59.7	59.7	59.5	50.0	38.2
2400	77	93.6	4.1	60.5	43.9	27.2	-	-	-	89.6	4.6	61.3	43.8	26.4	-	-	-
	72	88.6	4.1	65.3	53.5	41.7	29.9	-	-	84.4	4.5	64.1	52.2	40.3	28.3	-	-
	67	83.7	4.0	70.0	63.1	56.2	43.4	31.1	-	79.1	4.5	67.0	60.6	54.2	41.5	29.1	-
	62	74.8	4.0	74.8	72.9	70.7	56.1	44.0	30.6	72.1	4.5	71.9	70.0	68.0	54.3	41.8	28.7
	57	61.7	4.0	61.7	61.7	61.7	61.7	56.9	42.8	59.9	4.5	59.9	59.9	59.9	59.9	54.5	40.8
2700	72	90.6	4.1	69.4	56.3	43.2	30.2	-	-	86.4	4.6	68.4	55.1	41.8	28.6	-	-
	67	86.7	4.0	72.4	66.3	60.2	45.9	32.0	-	82.1	4.5	69.0	63.5	58.0	43.8	29.8	-
	62	75.5	4.0	75.5	75.5	75.5	61.4	46.9	31.8	72.4	4.5	72.4	72.4	72.4	59.0	44.4	29.6
	57	62.1	4.0	62.1	62.1	62.1	62.1	61.7	45.6	60.1	4.5	60.1	60.1	60.1	60.1	59.0	43.4
3000	72	92.6	4.1	73.5	59.1	44.79	30.5	-	-	88.4	4.6	72.7	58.1	43.4	28.8	-	-
	67	89.7	4.0	74.8	69.5	64.1	48.5	32.9	-	85.0	4.5	71.0	66.4	61.8	46.2	30.6	-
	62	76.2	4.1	76.2	76.2	76.2	66.6	49.8	32.9	72.7	4.5	72.7	72.7	72.7	63.6	47.1	30.5
	57	62.6	4.1	62.6	62.6	62.6	62.6	62.6	48.4	60.4	4.6	60.4	60.4	60.4	60.4	60.4	46.0
		95°F								105°F							
1500	77	82.1	5.0	39.6	33.2	26.8	-	-	-	79.9	5.7	38.7	31.5	24.4	-	-	-
	72	74.0	5.0	49.6	41.7	33.9	26.1	-	-	69.6	5.6	47.7	39.7	31.7	23.7	-	-
	67	65.9	4.9	59.6	50.3	41.0	33.2	25.3	-	59.3	5.6	56.8	47.9	39.0	31.0	23.1	-
	62	69.5	4.9	58.9	53.5	48.1	40.3	32.4	24.5	65.7	5.6	56.0	51.1	46.2	38.4	30.5	22.7
1800	77	83.3	5.1	47.0	36.7	26.4	-	-	-	78.7	5.7	45.6	34.8	24.0	-	-	-
	72	76.0	5.0	54.1	44.8	35.535	26.3	-	-	70.8	5.6	51.8	42.5	33.2	23.9	-	-
	67	68.8	4.9	61.1	52.9	44.7	35.3	25.9	-	62.8	5.6	58.1	50.3	42.5	33.1	23.7	-
	62	69.4	4.9	62.3	58.1	53.9	44.3	34.8	25.2	65.6	5.6	59.0	55.3	51.7	42.3	32.8	23.4
	57	58.2	4.9	58.2	58.2	58.2	53.4	43.7	34.0	60.5	5.6	59.9	59.9	59.9	51.4	41.9	32.4
2100	77	84.5	5.1	54.5	40.2	25.9	-	-	-	77.6	5.7	52.6	38.1	23.5	-	-	-
	72	78.1	5.0	58.5	47.9	37.2	26.5	-	-	71.9	5.7	56.0	45.4	34.7	24.1	-	-
	67	71.7	5.0	62.6	55.5	48.4	37.5	26.5	-	66.3	5.6	59.3	52.7	46.0	35.1	24.3	-
	62	69.4	5.0	65.7	62.7	59.7	48.4	37.2	25.9	65.5	5.6	62.0	59.6	57.2	46.1	35.1	24.1
	57	58.1	5.0	58.1	58.1	58.1	58.1	47.9	36.4	58.7	5.6	58.7	58.7	58.7	56.8	45.2	33.6
2400	77	85.7	5.1	62.0	43.8	25.5	-	-	-	76.4	5.7	59.5	41.3	23.1	-	-	-
	72	80.1	5.0	63.0	50.9	38.8	26.7	-	-	73.0	5.7	60.1	48.2	36.3	24.4	-	-
	67	74.6	5.0	64.1	58.1	52.1	39.6	27.1	-	69.7	5.6	60.6	55.0	49.5	37.2	24.9	-
	62	69.3	5.0	69.0	67.2	65.4	52.5	39.6	26.7	65.3	5.6	64.9	63.8	62.6	50.0	37.4	24.8
	57	58.1	5.0	58.1	58.1	58.1	58.1	52.1	38.8	57.0	5.6	57.0	57.0	57.0	57.0	48.5	34.8
2700	72	82.2	5.0	67.5	54.0	40.4	26.9	-	-	74.2	5.7	64.2	51.0	37.8	24.6	-	-
	67	77.5	5.0	65.6	60.7	55.8	41.7	27.7	-	73.2	5.7	61.9	57.4	53.0	39.3	25.5	-
	62	69.3	5.0	69.3	69.3	69.3	56.6	42.0	27.4	65.2	5.7	65.2	65.2	65.2	53.9	39.7	25.4
	57	58.1	5.0	58.1	58.1	58.1	58.1	56.3	41.1	55.2	5.7	55.2	55.2	55.2	55.2	51.8	36.0
3000	72	84.2	5.1	72.0	57.1	42.087	27.1	-	-	75.3	5.7	68.3	53.8	39.3	24.8	-	-
	67	80.4	5.0	67.1	63.3	59.5	43.9	28.3	-	76.6	5.7	63.1	59.8	56.5	41.3	26.2	-
	62	69.3	5.0	69.3	69.3	69.3	60.6	44.4	28.1	65.0	5.7	65.0	65.0	65.0	57.8	42.0	26.1
	57	58.1	5.1	58.1	58.1	58.1	58.1	58.1	43.5	53.5	5.7	53.5	53.5	53.5	53.5	53.5	37.2

XYEA7 (6.0 Ton) (Continued)

Air on Evaporator Coil		Temperature of Air on Condenser Coil															
		Total Capacity[1] (MBh)	Total Input (kW)[2]	Sensible Capacity (MBh)						Total Capacity[1] (MBh)	Total Input (kW)[2]	Sensible Capacity (MBh)					
				Return Dry Bulb (°F)								Return Dry Bulb (°F)					
CFM	WB (°F)			90	85	80	75	70	65			90	85	80	75	70	65
		115°F								125°F							
1500	77	77.7	6.3	37.7	29.9	22.1	-	-	-	75.6	6.9	36.8	28.3	19.7	-	-	-
	72	65.3	6.3	45.9	37.7	29.5	21.3	-	-	60.9	6.9	44.1	35.7	27.3	18.9	-	-
	67	52.8	6.2	52.8	45.5	36.9	28.9	20.9	-	46.3	6.9	46.3	43.1	34.8	26.7	18.6	-
	62	62.0	6.2	53.1	48.7	44.3	36.5	28.7	20.8	58.3	6.9	50.2	46.3	42.4	34.6	26.8	19.0
1800	77	74.2	6.3	44.2	32.9	21.6	-	-	-	69.7	7.0	42.8	31.0	19.2	-	-	-
	72	65.5	6.3	49.6	40.3	30.9	21.5	-	-	60.3	6.9	47.4	38.0	28.6	19.2	-	-
	67	56.8	6.2	55.1	47.6	40.2	30.9	21.5	-	50.9	6.9	50.9	45.0	38.0	28.6	19.3	-
	62	61.8	6.2	55.7	52.6	49.5	40.2	30.8	21.5	58.0	6.9	52.4	49.9	47.3	38.1	28.9	19.6
	57	62.8	6.2	56.3	56.3	56.3	49.5	40.2	30.9	65.1	6.9	52.7	52.7	52.7	47.6	38.4	29.3
2100	77	70.7	6.3	50.6	35.9	21.1	-	-	-	63.7	7.0	48.7	33.7	18.7	-	-	-
	72	65.7	6.3	53.4	42.8	32.3	21.8	-	-	59.6	7.0	50.8	40.3	29.9	19.4	-	-
	67	60.8	6.3	56.1	49.8	43.5	32.8	22.1	-	55.4	6.9	52.9	47.0	41.1	30.5	20.0	-
	62	61.5	6.3	58.3	56.5	54.7	43.9	33.0	22.2	57.6	6.9	54.6	53.4	52.2	41.6	30.9	20.3
	57	59.3	6.3	59.3	59.3	59.3	54.2	42.5	30.9	59.9	6.9	56.3	56.3	56.3	51.6	39.9	28.1
2400	77	67.1	6.4	57.1	38.9	20.7	-	-	-	57.8	7.0	54.6	36.4	18.2	-	-	-
	72	66.0	6.3	57.1	45.4	33.7	22.1	-	-	58.9	7.0	54.1	42.7	31.2	19.7	-	-
	67	64.8	6.3	57.1	52.0	46.8	34.8	22.8	-	59.9	7.0	53.7	48.9	44.2	32.4	20.6	-
	62	61.3	6.3	60.8	60.4	59.9	47.5	35.2	22.9	57.3	7.0	56.7	56.7	56.7	45.1	33.0	21.0
	57	55.8	6.3	55.8	55.8	55.8	55.8	44.9	30.9	54.6	6.9	54.6	54.6	54.6	54.6	41.3	26.9
2700	72	66.2	6.4	60.9	48.0	35.2	22.3	-	-	58.2	7.0	57.5	45.0	32.5	20.0	-	-
	67	68.8	6.3	58.2	54.1	50.1	36.8	23.4	-	64.5	7.0	54.4	50.9	47.3	34.3	21.3	-
	62	61.1	6.3	61.1	61.1	61.1	51.2	37.4	23.5	56.9	7.0	56.9	56.9	56.9	48.5	35.1	21.6
	57	52.3	6.3	52.3	52.3	52.3	52.3	47.3	30.9	49.4	7.0	49.4	49.4	49.4	49.4	42.8	25.8
3000	72	66.4	6.4	64.6	50.6	36.6	22.6	-	-	57.5	7.0	57.5	47.4	33.8	20.3	-	-
	67	72.8	6.4	59.2	56.3	53.4	38.7	24.1	-	69.0	7.0	55.2	52.8	50.4	36.2	22.0	-
	62	60.8	6.4	60.8	60.8	60.8	54.9	39.6	24.2	56.6	7.0	56.6	56.6	56.6	52.0	37.1	22.3
	57	48.8	6.4	48.8	48.8	48.8	48.8	48.8	30.9	44.2	7.0	44.2	44.2	44.2	44.2	44.2	24.6

1. These capacities are gross ratings. For net capacity, deduct the supply air blower motor heat (MBh = 3.415 x kW). Refer to the appropriate Blower Performance Table for the kW of the supply air blower motor.
2. These ratings include the condenser fan motors (total 1 kW) and the compressor motors but not the supply air blower motor.

XYE08 (7.5 Ton)

Air on Evaporator Coil		Temperature of Air on Condenser Coil															
		Total Capacity[1] (MBh)	Total Input (kW)[2]	Sensible Capacity (MBh) Return Dry Bulb (°F)						Total Capacity[1] (MBh)	Total Input (kW)[2]	Sensible Capacity (MBh) Return Dry Bulb (°F)					
CFM	WB (°F)			90	85	80	75	70	65			90	85	80	75	70	65
		75°F								85°F							
1875	77	113.5	5.2	46.7	38.6	32.4	-	-	-	109.9	5.9	46.2	38.7	31.2	-	-	-
	72	104.3	5.1	58.6	52.4	46.2	40.0	-	-	99.9	5.8	59.2	51.7	44.2	36.7	-	-
	67	95.0	5.0	70.5	66.2	60.0	53.8	47.6	-	89.9	5.7	72.3	64.8	57.3	49.7	42.2	-
	62	85.3	5.0	85.3	85.3	72.1	65.9	59.7	53.5	81.8	5.7	81.8	81.8	68.9	61.4	53.8	46.3
2250	77	118.7	5.2	52.7	44.2	35.6	-	-	-	114.1	5.9	53.0	43.6	34.2	-	-	-
	72	109.0	5.1	67.9	59.3	50.7	42.1	-	-	103.7	5.8	67.3	57.9	48.5	39.1	-	-
	67	99.3	5.0	83.0	74.4	65.8	57.2	48.6	-	93.3	5.7	81.6	72.2	62.8	53.4	44.0	-
	62	89.1	5.0	89.1	89.1	79.1	70.5	61.9	53.3	84.9	5.7	84.9	84.9	75.5	66.1	56.8	47.4
	57	86.1	5.0	86.1	86.1	79.8	71.2	62.6	54.0	83.3	5.7	83.3	83.3	75.9	66.5	57.1	47.8
2625	77	123.9	5.2	58.8	49.7	38.7	-	-	-	118.2	5.9	59.8	48.5	37.2	-	-	-
	72	113.7	5.1	77.1	66.1	55.2	44.2	-	-	107.5	5.8	75.3	64.1	52.8	41.5	-	-
	67	103.6	5.0	95.4	82.6	71.6	60.6	49.6	-	96.7	5.7	90.9	79.6	68.4	57.1	45.8	-
	62	93.0	5.0	93.0	93.0	86.0	75.0	64.1	53.1	88.0	5.7	88.0	88.0	82.2	70.9	59.7	48.4
	57	89.9	5.0	89.9	89.9	86.8	75.8	64.9	53.9	86.3	5.7	86.3	86.3	82.6	71.4	60.1	48.8
3000	77	129.0	5.2	64.9	55.2	41.8	-	-	-	122.4	5.9	66.6	53.4	40.3	-	-	-
	72	118.5	5.1	86.4	73.0	59.6	46.2	-	-	111.3	5.8	83.4	70.2	57.1	43.9	-	-
	67	107.9	5.0	107.9	90.8	77.4	64.0	50.6	-	100.1	5.7	100.1	87.1	73.9	60.7	47.6	-
	62	96.9	5.0	96.9	96.9	93.0	79.6	66.2	52.9	91.1	5.7	91.1	91.1	88.9	75.7	62.6	49.4
	57	93.6	5.0	93.6	93.6	93.6	80.5	67.1	53.7	89.3	5.7	89.3	89.3	89.3	76.2	63.0	49.9
3375	72	120.7	5.1	88.9	76.0	63.1	50.2	-	-	113.3	5.8	88.1	74.4	60.8	47.1	-	-
	67	109.9	5.0	109.9	95.2	81.9	69.0	56.1	-	102.0	5.7	102.0	92.4	78.7	65.0	51.4	-
	62	98.7	5.0	98.7	98.7	96.8	83.9	71.0	58.1	92.8	5.7	92.8	92.8	91.7	78.0	64.3	50.7
	57	95.4	5.0	95.4	95.4	95.4	82.6	69.7	56.8	91.0	5.7	91.0	91.0	91.0	77.3	63.7	50.0
3750	72	122.9	5.2	91.4	79.0	66.6	54.2	-	-	115.4	5.8	92.8	78.6	64.5	50.3	-	-
	67	111.9	5.1	111.9	99.5	86.4	74.0	61.6	-	103.8	5.8	103.8	97.7	83.5	69.3	55.2	-
	62	100.5	5.1	100.5	100.5	100.5	88.1	75.7	63.3	94.4	5.7	94.4	94.4	94.4	80.3	66.1	52.0
	57	97.1	5.1	97.1	97.1	97.1	84.7	72.3	59.9	92.7	5.7	92.7	92.7	92.7	78.5	64.3	50.2
		95°F								105°F							
1875	77	106.3	6.5	45.7	38.8	30.0	-	-	-	94.5	7.3	39.8	35.0	26.8	-	-	-
	72	95.6	6.4	59.9	51.1	42.3	33.4	-	-	85.3	7.3	55.2	47.1	38.9	30.7	-	-
	67	84.8	6.4	74.1	63.4	54.6	45.7	36.9	-	76.1	7.2	70.7	59.2	51.0	42.8	34.7	-
	62	78.3	6.3	78.3	78.3	65.7	56.9	48.0	39.2	71.2	7.1	71.2	71.2	60.0	51.9	43.7	35.5
2250	77	109.4	6.5	53.2	43.1	32.9	-	-	-	98.0	7.3	48.6	39.1	29.6	-	-	-
	72	98.4	6.5	66.7	56.5	46.3	36.1	-	-	88.4	7.3	61.9	52.4	42.9	33.5	-	-
	67	87.3	6.4	80.2	70.0	59.8	49.6	39.4	-	78.9	7.2	75.3	65.8	56.3	46.8	37.3	-
	62	80.6	6.3	80.6	80.6	72.0	61.8	51.6	41.4	73.8	7.2	73.8	73.8	66.3	56.8	47.3	37.8
	57	80.4	6.3	80.4	80.4	72.1	61.9	51.7	41.5	72.8	7.2	72.8	72.8	65.5	56.0	46.5	37.0
2625	77	112.6	6.5	60.8	47.3	35.8	-	-	-	101.4	7.4	57.4	43.2	32.4	-	-	-
	72	101.2	6.5	73.5	62.0	50.4	38.9	-	-	91.5	7.3	68.6	57.8	47.0	36.2	-	-
	67	89.8	6.4	86.3	76.7	65.1	53.5	42.0	-	81.6	7.3	79.8	72.4	61.6	50.8	40.0	-
	62	82.9	6.3	82.9	82.9	78.4	66.8	55.3	43.7	76.4	7.2	76.4	76.4	72.5	61.7	50.9	40.1
	57	82.7	6.4	82.7	82.7	78.4	66.9	55.3	43.8	75.3	7.2	75.3	75.3	71.6	60.8	50.0	39.2
3000	77	115.7	6.5	68.4	51.6	38.7	-	-	-	104.8	7.4	66.1	47.3	35.2	-	-	-
	72	104.0	6.5	80.3	67.4	54.5	41.6	-	-	94.6	7.3	75.3	63.1	51.0	38.9	-	-
	67	92.3	6.4	92.3	83.3	70.4	57.4	44.5	-	84.4	7.3	84.4	79.0	66.9	54.8	42.6	-
	62	85.2	6.3	85.2	85.2	84.7	71.8	58.9	46.0	79.0	7.2	79.0	79.0	78.7	66.6	54.5	42.3
	57	85.0	6.4	85.0	85.0	84.8	71.9	59.0	46.0	77.9	7.2	77.9	77.9	77.7	65.6	53.5	41.4
3375	72	106.0	6.5	87.3	72.9	58.5	44.0	-	-	96.0	7.3	81.5	68.1	54.7	41.4	-	-
	67	94.1	6.4	94.1	89.5	75.5	61.0	46.6	-	85.7	7.3	85.7	83.0	71.7	58.4	45.0	-
	62	86.8	6.3	86.8	86.8	86.6	72.1	57.7	43.3	80.1	7.2	80.1	80.1	80.0	66.7	53.3	39.9
	57	86.6	6.3	86.6	86.6	86.5	72.1	57.7	43.2	79.0	7.2	79.0	79.0	79.0	65.6	52.2	38.9
3750	72	107.9	6.4	94.2	78.3	62.4	46.5	-	-	97.5	7.3	87.6	73.0	58.4	43.8	-	-
	67	95.8	6.4	95.8	95.8	80.6	64.6	48.7	-	87.0	7.3	87.0	87.0	76.6	62.0	47.4	-
	62	88.4	6.3	88.4	88.4	88.4	72.5	56.6	40.7	81.3	7.2	81.3	81.3	81.3	66.7	52.1	37.5
	57	88.2	6.3	88.2	88.2	88.2	72.3	56.4	40.5	80.2	7.2	80.2	80.2	80.2	65.6	51.0	36.4

XYE08 (7.5 Ton) (Continued)

Air on Evaporator Coil		Temperature of Air on Condenser Coil															
		Total Capacity[1] (MBh)	Total Input (kW)[2]	Sensible Capacity (MBh)						Total Capacity[1] (MBh)	Total Input (kW)[2]	Sensible Capacity (MBh)					
CFM	WB (°F)			Return Dry Bulb (°F)								Return Dry Bulb (°F)					
				90	85	80	75	70	65			90	85	80	75	70	65
		115°F								125°F							
1875	77	82.8	8.1	33.9	31.2	23.7	-	-	-	71.0	9.0	33.1	26.4	20.6	-	-	-
	72	75.1	8.1	50.6	43.1	35.6	28.1	-	-	64.9	8.9	45.9	39.1	32.2	25.4	-	-
	67	67.4	8.1	67.2	54.9	47.4	39.9	32.4	-	58.7	8.9	58.7	50.7	43.9	37.0	30.2	-
	62	64.1	8.0	64.1	64.1	54.4	46.9	39.4	31.9	57.0	8.8	57.0	57.0	48.7	41.9	35.1	28.2
2250	77	86.5	8.2	43.9	35.1	26.3	-	-	-	75.0	9.0	42.6	31.2	23.1	-	-	-
	72	78.5	8.1	57.1	48.3	39.6	30.8	-	-	68.5	9.0	52.3	44.2	36.2	28.1	-	-
	67	70.4	8.1	70.3	61.5	52.8	44.0	35.2	-	62.0	8.9	62.0	57.3	49.2	41.2	33.1	-
	62	66.9	8.0	66.9	66.9	60.5	51.7	42.9	34.1	60.1	8.9	60.1	60.1	54.7	46.6	38.6	30.5
	57	65.1	8.0	65.1	65.1	58.8	50.0	41.3	32.5	57.4	8.9	57.4	57.4	52.2	44.1	36.1	28.0
2625	77	90.2	8.2	53.9	39.1	29.0	-	-	-	79.0	9.0	52.1	35.9	25.6	-	-	-
	72	81.8	8.2	63.6	53.6	43.5	33.5	-	-	72.1	9.0	58.7	49.4	40.1	30.8	-	-
	67	73.5	8.1	73.4	68.1	58.1	48.0	38.0	-	65.3	9.0	65.3	63.9	54.6	45.3	36.0	-
	62	69.8	8.1	69.8	69.8	66.6	56.5	46.5	36.4	63.2	8.9	63.2	63.2	60.7	51.4	42.1	32.8
	57	67.9	8.0	67.9	67.9	64.8	54.7	44.6	34.6	60.5	8.9	60.5	60.5	57.9	48.6	39.3	30.0
3000	77	93.9	8.2	63.9	43.0	31.7	-	-	-	83.0	9.1	61.7	40.6	28.2	-	-	-
	72	85.2	8.2	70.2	58.9	47.5	36.2	-	-	75.7	9.0	65.1	54.6	44.0	33.5	-	-
	67	76.5	8.1	76.5	74.7	63.4	52.1	40.7	-	68.5	9.0	68.5	68.5	59.9	49.4	38.8	-
	62	72.7	8.1	72.7	72.7	72.7	61.3	50.0	38.7	66.4	9.0	66.4	66.4	66.4	56.1	45.6	35.1
	57	70.7	8.1	70.7	70.7	70.7	59.4	48.0	36.7	63.5	8.9	63.5	63.5	63.5	53.1	42.6	32.0
3375	72	86.1	8.2	75.6	63.3	51.0	38.7	-	-	76.2	9.1	69.8	58.5	47.3	36.0	-	-
	67	77.3	8.2	77.3	76.4	68.0	55.7	43.4	-	68.9	9.0	68.9	68.9	64.3	53.1	41.8	-
	62	73.5	8.1	73.5	73.5	73.5	61.2	48.8	36.5	66.8	9.0	66.8	66.8	66.8	55.7	44.4	33.1
	57	71.4	8.1	71.4	71.4	71.4	59.1	46.8	34.5	63.9	9.0	63.9	63.9	63.9	52.7	41.4	30.2
3750	72	87.0	8.2	81.1	67.8	54.5	41.2	-	-	76.6	9.1	74.5	62.5	50.5	38.5	-	-
	67	78.1	8.2	78.1	78.1	72.7	59.4	46.1	-	69.3	9.0	69.3	69.3	68.7	56.7	44.8	-
	62	74.3	8.1	74.3	74.3	74.3	61.0	47.7	34.4	67.2	9.0	67.2	67.2	67.2	55.2	43.2	31.2
	57	72.2	8.1	72.2	72.2	72.2	58.9	45.6	32.3	64.2	9.0	64.2	64.2	64.2	52.2	40.3	28.3

1. These capacities are gross ratings. For net capacity, deduct the supply air blower motor heat (MBh = 3.415 x kW). Refer to the appropriate Blower Performance Table for the kW of the supply air blower motor.
2. These ratings include the condenser fan motors (total 1 kW) and the compressor motors but not the supply air blower motor.

XYE09 (8.5 Ton)

Air on Evaporator Coil		Temperature of Air on Condenser Coil															
		Total Capacity[1] (MBh)	Total Input (kW)[2]	Sensible Capacity (MBh) Return Dry Bulb (°F)						Total Capacity[1] (MBh)	Total Input (kW)[2]	Sensible Capacity (MBh) Return Dry Bulb (°F)					
CFM	WB (°F)			90	85	80	75	70	65			90	85	80	75	70	65
		75°F								85°F							
2125	77	131.1	5.8	57.6	48.1	39.3	-	-	-	122.6	6.6	54.6	45.8	37.0	-	-	-
	72	119.4	5.7	70.5	61.7	52.9	44.1	-	-	111.9	6.5	68.1	59.4	50.6	41.8	-	-
	67	107.8	5.5	83.5	75.4	66.5	57.7	48.9	-	101.1	6.4	81.7	72.9	64.1	55.3	46.6	-
	62	99.7	5.5	99.7	94.3	80.6	71.8	63.0	54.2	93.6	6.4	93.6	91.0	77.5	68.7	59.9	51.2
2550	77	135.4	5.8	63.5	53.2	42.9	-	-	-	126.6	6.6	60.9	50.7	40.4	-	-	-
	72	123.4	5.7	78.4	68.1	57.9	47.6	-	-	115.5	6.5	75.7	65.5	55.2	45.0	-	-
	67	111.4	5.6	93.3	83.1	72.8	62.5	52.2	-	104.4	6.4	90.5	80.3	70.0	59.8	49.6	-
	62	103.0	5.5	103.0	99.4	88.2	77.9	67.6	57.4	96.7	6.4	96.7	94.9	84.6	74.4	64.2	53.9
	57	101.3	5.5	101.3	101.3	90.9	80.7	70.4	60.1	96.4	6.3	96.4	96.4	86.4	76.1	65.9	55.7
2975	77	139.7	5.9	69.4	58.3	46.6	-	-	-	130.6	6.7	67.2	55.5	43.8	-	-	-
	72	127.3	5.7	86.3	74.5	62.8	51.1	-	-	119.1	6.6	83.3	71.6	59.9	48.2	-	-
	67	114.9	5.6	103.1	90.7	79.0	67.3	55.6	-	107.6	6.5	99.3	87.6	75.9	64.2	52.6	-
	62	106.3	5.6	106.3	104.5	95.7	84.0	72.3	60.6	99.7	6.4	99.7	98.8	91.8	80.1	68.4	56.7
	57	104.5	5.5	104.5	104.5	98.7	87.0	75.3	63.6	99.4	6.4	99.4	99.4	93.6	82.0	70.3	58.6
3400	77	144.0	5.9	75.4	63.5	50.3	-	-	-	134.5	6.7	73.5	60.4	47.3	-	-	-
	72	131.2	5.8	94.1	80.9	67.8	54.6	-	-	122.7	6.6	90.8	77.7	64.5	51.4	-	-
	67	118.5	5.6	112.9	98.4	85.2	72.1	58.9	-	110.9	6.5	108.1	95.0	81.8	68.7	55.6	-
	62	109.6	5.6	109.6	109.6	103.3	90.1	76.9	63.8	102.7	6.4	102.7	102.7	98.9	85.8	72.7	59.5
	57	107.8	5.6	107.8	107.8	106.5	93.3	80.2	67.0	102.5	6.4	102.5	102.5	100.9	87.8	74.7	61.5
3825	72	133.7	5.8	101.0	86.6	72.3	57.9	-	-	124.7	6.6	97.7	83.4	69.0	54.7	-	-
	67	120.7	5.7	117.9	105.2	90.9	76.5	62.2	-	112.7	6.5	111.3	101.9	87.5	73.2	58.9	-
	62	111.6	5.6	111.6	111.6	108.5	94.2	79.8	65.5	104.4	6.5	104.4	104.4	102.5	88.2	73.8	59.5
	57	109.8	5.6	109.8	109.8	109.2	94.9	80.5	66.2	104.1	6.4	104.1	104.1	103.3	89.0	74.7	60.4
4250	72	136.2	5.8	107.8	92.3	76.7	61.2	-	-	126.6	6.6	104.5	89.0	73.5	58.1	-	-
	67	123.0	5.7	123.0	112.0	96.5	81.0	65.5	-	114.4	6.5	114.4	108.7	93.2	77.8	62.3	-
	62	113.7	5.7	113.7	113.7	113.7	98.2	82.7	67.2	106.0	6.5	106.0	106.0	106.0	90.5	75.0	59.6
	57	111.9	5.6	111.9	111.9	111.9	96.4	80.8	65.3	105.7	6.4	105.7	105.7	105.7	90.2	74.8	59.3
		95°F								105°F							
2125	77	114.2	7.4	51.6	43.5	34.8	-	-	-	102.8	8.4	44.4	38.9	30.2	-	-	-
	72	104.3	7.3	65.7	57.0	48.2	39.5	-	-	94.8	8.4	61.4	52.7	44.1	35.4	-	-
	67	94.4	7.3	79.8	70.4	61.7	53.0	44.2	-	86.8	8.3	78.4	66.6	58.0	49.3	40.6	-
	62	87.6	7.2	87.6	87.6	74.4	65.6	56.9	48.2	81.7	8.2	81.7	81.7	67.9	59.3	50.6	41.9
2550	77	117.8	7.4	58.3	48.1	37.9	-	-	-	106.3	8.4	53.6	43.4	33.2	-	-	-
	72	107.6	7.4	73.0	62.8	52.6	42.4	-	-	98.0	8.4	68.9	58.7	48.5	38.3	-	-
	67	97.4	7.3	87.7	77.5	67.3	57.1	46.9	-	89.8	8.3	84.2	74.0	63.8	53.6	43.5	-
	62	90.4	7.2	90.4	90.4	81.1	70.9	60.7	50.5	84.5	8.2	84.5	84.5	74.8	64.6	54.4	44.2
	57	91.5	7.2	91.5	91.5	81.8	71.6	61.4	51.2	85.0	8.2	85.0	85.0	75.1	64.9	54.8	44.6
2975	77	121.5	7.4	65.0	52.7	41.1	-	-	-	109.9	8.4	62.8	47.9	36.2	-	-	-
	72	110.9	7.4	80.3	68.6	57.0	45.3	-	-	101.3	8.4	76.4	64.7	53.0	41.3	-	-
	67	100.3	7.3	95.5	84.5	72.9	61.2	49.6	-	92.8	8.3	90.0	81.4	69.7	58.0	46.3	-
	62	93.1	7.2	93.1	93.1	87.8	76.2	64.5	52.9	87.4	8.2	87.4	87.3	81.6	69.9	58.2	46.5
	57	94.4	7.2	94.4	94.4	88.5	76.9	65.3	53.6	87.8	8.2	87.8	87.8	82.0	70.3	58.6	46.9
3400	77	125.1	7.4	71.7	57.3	44.2	-	-	-	113.4	8.5	72.0	52.5	39.2	-	-	-
	72	114.2	7.4	87.5	74.4	61.3	48.2	-	-	104.6	8.4	83.9	70.6	57.4	44.2	-	-
	67	103.3	7.3	103.3	91.5	78.4	65.3	52.2	-	95.8	8.4	95.8	88.8	75.6	62.3	49.1	-
	62	95.9	7.3	95.9	95.9	94.6	81.5	68.4	55.3	90.2	8.2	90.2	90.2	88.5	75.2	62.0	48.8
	57	97.2	7.2	97.2	97.2	95.3	82.2	69.1	56.0	90.7	8.2	90.7	90.7	88.9	75.6	62.4	49.2
3825	72	115.6	7.4	94.4	80.1	65.8	51.6	-	-	105.6	8.4	90.0	75.7	61.5	47.2	-	-
	67	104.6	7.4	104.6	98.5	84.2	69.9	55.7	-	96.6	8.4	96.6	93.0	80.9	66.6	52.4	-
	62	97.1	7.3	97.1	97.1	96.4	82.1	67.9	53.6	91.0	8.3	91.0	91.0	90.2	75.9	61.6	47.4
	57	98.4	7.2	98.4	98.4	97.4	83.2	68.9	54.6	91.5	8.2	91.5	91.5	90.6	76.3	62.1	47.8
4250	72	117.0	7.4	101.2	85.8	70.4	54.9	-	-	106.5	8.4	96.1	80.8	65.5	50.2	-	-
	67	105.9	7.4	105.9	105.4	90.0	74.5	59.1	-	97.5	8.4	97.5	97.3	86.2	71.0	55.7	-
	62	98.2	7.3	98.2	98.2	98.2	82.8	67.4	51.9	91.8	8.3	91.8	91.8	91.8	76.6	61.3	46.0
	57	99.5	7.3	99.5	99.5	99.5	84.1	68.7	53.2	92.3	8.3	92.3	92.3	92.3	77.1	61.8	46.5

XYE09 (8.5 Ton) (Continued)

Air on Evaporator Coil		Temperature of Air on Condenser Coil															
		Total Capacity[1] (MBh)	Total Input (kW)[2]	Sensible Capacity (MBh) Return Dry Bulb (°F)						Total Capacity[1] (MBh)	Total Input (kW)[2]	Sensible Capacity (MBh) Return Dry Bulb (°F)					
CFM	WB (°F)			90	85	80	75	70	65			90	85	80	75	70	65
		115°F								125°F							
2125	77	91.3	9.4	37.2	34.2	25.6	-	-	-	79.9	10.4	34.1	28.2	21.0	-	-	-
	72	85.2	9.4	57.1	48.5	39.9	31.3	-	-	75.7	10.4	52.8	44.3	35.8	27.2	-	-
	67	79.2	9.3	77.1	62.9	54.3	45.7	37.1	-	71.6	10.3	71.6	59.1	50.5	42.0	33.5	-
	62	75.8	9.2	75.8	75.7	61.5	52.9	44.3	35.7	70.0	10.2	70.0	69.8	55.1	46.5	38.0	29.5
2550	77	94.8	9.4	48.9	38.7	28.5	-	-	-	83.3	10.5	46.9	33.9	23.7	-	-	-
	72	88.5	9.4	64.8	54.6	44.4	34.3	-	-	78.9	10.4	60.7	50.5	40.4	30.2	-	-
	67	82.2	9.3	80.8	70.6	60.4	50.2	40.0	-	74.6	10.4	74.6	67.1	57.0	46.8	36.6	-
	62	78.7	9.2	78.7	78.6	68.5	58.3	48.1	37.9	72.9	10.2	72.9	72.8	62.1	51.9	41.8	31.6
	57	78.4	9.2	78.4	78.4	68.5	58.3	48.1	37.9	71.9	10.2	71.9	71.9	61.9	51.7	41.5	31.3
2975	77	98.3	9.5	60.5	43.1	31.4	-	-	-	86.7	10.5	59.7	39.7	26.5	-	-	-
	72	91.7	9.4	72.5	60.7	49.0	37.2	-	-	82.1	10.4	68.6	56.8	44.9	33.1	-	-
	67	85.2	9.4	84.5	78.3	66.5	54.8	43.0	-	77.6	10.4	77.6	75.2	63.4	51.5	39.7	-
	62	81.6	9.2	81.6	81.6	75.4	63.6	51.9	40.1	75.8	10.2	75.8	75.8	69.2	57.4	45.5	33.7
	57	81.3	9.2	81.3	81.3	75.5	63.7	51.9	40.1	74.8	10.2	74.8	74.8	68.9	57.1	45.2	33.4
3400	77	101.8	9.5	72.2	47.6	34.3	-	-	-	90.1	10.5	72.4	45.4	29.3	-	-	-
	72	95.0	9.4	80.2	66.8	53.5	40.1	-	-	85.4	10.4	76.5	63.0	49.5	36.0	-	-
	67	88.2	9.4	88.2	86.0	72.7	59.3	46.0	-	80.6	10.4	80.6	80.6	69.8	56.3	42.8	-
	62	84.5	9.2	84.5	84.5	82.4	69.0	55.7	42.3	78.8	10.2	78.8	78.8	76.3	62.8	49.3	35.8
	57	84.2	9.2	84.2	84.2	82.4	69.1	55.7	42.3	77.7	10.2	77.7	77.7	76.0	62.5	49.0	35.5
3825	72	95.5	9.4	85.6	71.3	57.1	42.8	-	-	85.5	10.4	81.2	66.9	52.7	38.5	-	-
	67	88.7	9.4	88.7	87.6	77.6	63.3	49.1	-	80.7	10.4	80.7	80.7	74.3	60.0	45.8	-
	62	85.0	9.2	85.0	85.0	83.9	69.7	55.4	41.2	78.9	10.2	78.9	78.9	77.7	63.4	49.2	35.0
	57	84.7	9.2	84.7	84.7	83.8	69.5	55.3	41.0	77.8	10.3	77.8	77.8	76.9	62.7	48.5	34.2
4250	72	96.0	9.4	90.9	75.8	60.7	45.6	-	-	85.6	10.4	85.6	70.8	55.9	40.9	-	-
	67	89.2	9.4	89.2	89.2	82.5	67.4	52.2	-	80.9	10.4	80.9	80.9	78.8	63.8	48.8	-
	62	85.4	9.2	85.4	85.4	85.4	70.3	55.2	40.1	79.0	10.2	79.0	79.0	79.0	64.1	49.1	34.1
	57	85.1	9.3	85.1	85.1	85.1	70.0	54.9	39.8	77.9	10.3	77.9	77.9	77.9	63.0	48.0	33.0

1. These capacities are gross ratings. For net capacity, deduct the supply air blower motor heat (MBh = 3.415 x kW). Refer to the appropriate Blower Performance Table for the kW of the supply air blower motor.
2. These ratings include the condenser fan motors (total 1 kW) and the compressor motors but not the supply air blower motor.

XXEA7 (6.0 Ton)

Air on Evaporator Coil		Temperature of Air on Condenser Coil															
		Total Capacity[1] (MBh)	Total Input (kW)[2]	Sensible Capacity (MBh) Return Dry Bulb (°F)						Total Capacity[1] (MBh)	Total Input (kW)[2]	Sensible Capacity (MBh) Return Dry Bulb (°F)					
CFM	WB (°F)			90	85	80	75	70	65			90	85	80	75	70	65
		75°F								85°F							
1500	77	87.8	4.2	42.7	35.7	28.9	-	-	-	83.4	4.9	35.9	30.7	24.0	-	-	-
	72	81.3	4.1	50.8	44.0	37.2	30.4	-	-	76.8	4.8	46.9	40.3	33.6	27.0	-	-
	67	74.7	4.0	59.0	52.4	45.6	38.8	32.0	-	70.2	4.7	58.0	49.9	43.2	36.6	29.9	-
	62	67.1	3.9	67.1	65.8	54.1	47.3	40.5	33.7	64.3	4.6	64.3	62.5	50.9	44.3	37.6	31.0
1800	77	90.5	4.3	47.9	40.1	32.3	-	-	-	85.8	4.9	42.5	34.7	27.0	-	-	-
	72	83.8	4.2	57.2	49.4	41.7	33.9	-	-	79.0	4.8	53.3	45.5	37.8	30.1	-	-
	67	77.0	4.1	66.6	58.8	51.0	43.2	35.4	-	72.2	4.7	64.1	56.3	48.6	40.9	33.1	-
	62	69.2	3.9	69.2	68.3	60.5	52.7	44.9	37.1	66.2	4.6	66.2	65.0	57.2	49.5	41.8	34.0
	57	69.9	4.0	69.9	68.9	61.1	53.3	45.5	37.7	66.5	4.6	66.5	65.3	57.5	49.8	42.1	34.3
2100	77	93.2	4.4	53.2	44.6	35.8	-	-	-	88.2	4.9	49.0	38.8	30.0	-	-	-
	72	86.3	4.3	63.6	54.9	46.1	37.3	-	-	81.2	4.8	59.6	50.8	42.0	33.1	-	-
	67	79.4	4.2	74.1	65.1	56.4	47.6	38.8	-	74.2	4.8	70.2	62.8	54.0	45.1	36.3	-
	62	71.3	4.0	71.3	70.8	66.9	58.2	49.4	40.6	68.0	4.6	68.0	67.4	63.5	54.7	45.9	37.1
	57	72.0	4.0	72.0	71.5	67.6	58.8	50.0	41.3	68.4	4.7	68.4	67.7	63.9	55.0	46.2	37.4
2400	77	96.0	4.4	58.4	49.0	39.3	-	-	-	90.6	5.0	55.6	42.8	32.9	-	-	-
	72	88.8	4.3	70.0	60.3	50.5	40.8	-	-	83.4	4.9	65.9	56.0	46.1	36.2	-	-
	67	81.7	4.2	81.7	71.5	61.8	52.0	42.2	-	76.2	4.8	76.2	69.2	59.3	49.4	39.5	-
	62	73.3	4.1	73.3	73.3	73.3	63.6	53.8	44.1	69.8	4.7	69.8	69.8	69.8	59.9	50.0	40.1
	57	74.1	4.1	74.1	74.1	74.1	64.3	54.6	44.8	70.2	4.7	70.2	70.2	70.2	60.3	50.4	40.5
2700	72	90.8	4.3	74.7	63.7	52.8	41.8	-	-	84.5	4.9	70.5	59.4	48.3	37.2	-	-
	67	83.5	4.2	83.5	77.4	64.5	53.5	42.5	-	77.2	4.8	77.2	73.2	62.1	51.0	39.9	-
	62	75.0	4.1	75.0	75.0	75.0	64.1	53.1	42.1	70.8	4.7	70.8	70.8	70.8	59.7	48.6	37.5
	57	75.8	4.1	75.8	75.8	75.8	64.8	53.8	42.8	71.1	4.7	71.1	71.1	71.1	60.0	48.9	37.8
3000	72	92.9	4.4	79.4	67.2	55.0	42.8	-	-	85.6	5.0	75.1	62.8	50.5	38.2	-	-
	67	85.4	4.3	85.4	83.3	67.2	55.0	42.8	-	78.2	4.9	78.2	77.2	64.9	52.6	40.3	-
	62	76.7	4.1	76.7	76.7	76.7	64.5	52.3	40.1	71.7	4.8	71.7	71.7	71.7	59.4	47.1	34.8
	57	77.5	4.1	77.5	77.5	77.5	65.3	53.1	40.9	72.0	4.8	72.0	72.0	72.0	59.7	47.4	35.2
		95°F								105°F							
1500	77	79.1	5.5	29.1	25.7	19.2	-	-	-	72.9	6.2	27.2	24.6	18.3	-	-	-
	72	72.4	5.4	43.0	36.5	30.0	23.5	-	-	66.8	6.1	41.8	35.3	28.8	22.3	-	-
	67	65.7	5.3	57.0	47.4	40.9	34.4	27.9	-	60.7	6.0	56.4	45.9	39.2	32.7	26.2	-
	62	61.6	5.2	61.6	59.3	47.8	41.3	34.8	28.3	57.7	6.0	57.7	56.6	45.3	38.8	32.3	25.8
1800	77	81.1	5.5	37.0	29.3	21.6	-	-	-	74.7	6.2	36.1	28.3	20.6	-	-	-
	72	74.2	5.4	49.3	41.6	33.9	26.3	-	-	68.4	6.1	47.7	40.0	32.3	24.6	-	-
	67	67.4	5.3	61.6	53.9	46.2	38.6	30.9	-	62.2	6.0	59.3	51.7	44.0	36.3	28.6	-
	62	63.2	5.3	63.2	61.6	54.0	46.3	38.6	30.9	59.1	6.0	59.1	58.3	50.8	43.1	35.4	27.7
	57	63.2	5.3	63.2	61.6	54.0	46.3	38.6	30.9	59.0	6.0	59.0	58.1	50.4	42.7	35.0	27.3
2100	77	83.1	5.5	44.9	33.0	24.1	-	-	-	76.4	6.3	45.0	31.9	22.8	-	-	-
	72	76.1	5.4	55.6	46.7	37.8	29.0	-	-	70.0	6.2	53.6	44.7	35.8	26.9	-	-
	67	69.1	5.4	66.2	60.4	51.5	42.7	33.8	-	63.6	6.1	62.2	57.4	48.7	39.8	30.9	-
	62	64.8	5.3	64.8	64.0	60.2	51.3	42.4	33.6	60.5	6.0	60.5	60.1	56.3	47.4	38.5	29.6
	57	64.7	5.3	64.7	64.0	60.1	51.3	42.4	33.5	60.3	6.0	60.3	59.9	55.9	47.0	38.1	29.2
2400	77	85.2	5.6	52.8	36.6	26.6	-	-	-	78.2	6.3	53.8	35.6	25.0	-	-	-
	72	78.0	5.5	61.8	51.8	41.7	31.7	-	-	71.6	6.2	59.5	49.4	39.3	29.2	-	-
	67	70.8	5.4	70.8	66.9	56.8	46.8	36.7	-	65.1	6.1	65.1	63.1	53.5	43.4	33.3	-
	62	66.3	5.3	66.3	66.3	66.3	56.3	46.3	36.2	61.8	6.0	61.8	61.8	61.8	51.8	41.7	31.6
	57	66.3	5.3	66.3	66.3	66.3	56.3	46.2	36.2	61.7	6.0	61.7	61.7	61.3	51.2	41.1	31.1
2700	72	78.1	5.5	66.2	55.0	43.8	32.6	-	-	71.7	6.2	63.7	52.8	41.5	30.2	-	-
	67	70.9	5.4	70.9	69.0	59.7	48.5	37.3	-	65.1	6.1	65.1	64.2	56.6	45.2	33.9	-
	62	66.5	5.4	66.5	66.5	66.5	55.3	44.0	32.8	61.9	6.1	61.9	61.9	61.9	50.5	39.2	27.9
	57	66.5	5.4	66.5	66.5	66.5	55.2	44.0	32.8	61.7	6.1	61.7	61.7	61.6	50.2	38.9	27.5
3000	72	78.3	5.6	70.7	58.3	45.9	33.6	-	-	71.7	6.3	67.9	56.3	43.7	31.2	-	-
	67	71.0	5.5	71.0	71.0	62.6	50.2	37.8	-	65.2	6.2	65.2	65.2	59.6	47.0	34.4	-
	62	66.6	5.4	66.6	66.6	66.6	54.2	41.8	29.5	61.9	6.2	61.9	61.9	61.9	49.3	36.7	24.2
	57	66.6	5.4	66.6	66.6	66.6	54.2	41.8	29.5	61.8	6.1	61.8	61.8	61.8	49.2	36.6	24.0

XXEA7 (6.0 Ton) (Continued)

Air on Evaporator Coil		Temperature of Air on Condenser Coil															
		Total Capacity[1] (MBh)	Total Input (kW)[2]	Sensible Capacity (MBh)						Total Capacity[1] (MBh)	Total Input (kW)[2]	Sensible Capacity (MBh)					
CFM	WB (°F)			Return Dry Bulb (°F)								Return Dry Bulb (°F)					
				90	85	80	75	70	65			90	85	80	75	70	65
		115°F								125°F							
1500	77	66.8	7.0	25.3	23.6	17.5	-	-	-	60.7	7.7	27.7	21.5	16.7	-	-	-
	72	61.3	6.9	40.5	34.0	27.5	21.0	-	-	55.8	7.6	39.2	32.7	26.2	19.7	-	-
	67	55.8	6.7	55.8	44.4	37.5	30.9	24.4	-	50.8	7.5	50.8	42.9	35.7	29.2	22.7	-
	62	53.8	6.7	53.8	53.8	42.8	36.3	29.8	23.3	49.9	7.4	49.9	49.9	40.3	33.8	27.3	20.7
1800	77	68.3	7.0	35.1	27.2	19.5	-	-	-	61.9	7.7	37.1	26.2	18.4	-	-	-
	72	62.6	6.9	46.0	38.3	30.6	22.9	-	-	56.8	7.6	44.4	36.7	28.9	21.2	-	-
	67	57.0	6.8	57.0	49.4	41.7	34.0	26.3	-	51.8	7.5	51.8	47.2	39.4	31.7	23.9	-
	62	55.0	6.7	55.0	55.0	47.6	39.9	32.2	24.5	50.9	7.4	50.9	50.9	44.5	36.7	29.0	21.3
	57	54.7	6.7	54.7	54.5	46.8	39.1	31.4	23.6	50.5	7.4	50.5	50.5	43.2	35.5	27.8	20.0
2100	77	69.8	7.0	45.0	30.9	21.5	-	-	-	63.1	7.7	46.5	30.8	20.2	-	-	-
	72	64.0	6.9	51.6	42.6	33.7	24.8	-	-	57.9	7.6	49.6	40.6	31.7	22.7	-	-
	67	58.2	6.8	58.2	54.4	45.9	37.0	28.1	-	52.7	7.5	52.7	51.4	43.2	34.2	25.2	-
	62	56.2	6.7	56.2	56.2	52.5	43.6	34.6	25.7	51.9	7.4	51.9	51.9	48.7	39.7	30.7	21.8
	57	55.9	6.7	55.9	55.8	51.6	42.6	33.7	24.8	51.5	7.3	51.5	51.5	47.3	38.3	29.4	20.4
2400	77	71.2	7.0	54.8	34.6	23.5	-	-	-	64.2	7.7	55.8	35.5	21.9	-	-	-
	72	65.3	6.9	57.1	47.0	36.8	26.7	-	-	59.0	7.6	54.8	44.6	34.4	24.2	-	-
	67	59.4	6.8	59.4	59.4	50.2	40.1	29.9	-	53.7	7.5	53.7	53.7	46.9	36.7	26.5	-
	62	57.3	6.7	57.3	57.3	57.3	47.2	37.1	26.9	52.8	7.4	52.8	52.8	52.8	42.7	32.5	22.3
	57	57.1	6.7	57.1	57.1	56.3	46.2	36.1	25.9	52.5	7.3	52.5	52.5	51.4	41.2	31.0	20.8
2700	72	65.2	7.0	61.1	50.7	39.2	27.7	-	-	58.8	7.7	58.6	48.5	36.9	25.3	-	-
	67	59.3	6.9	59.3	59.3	53.4	41.9	30.5	-	53.6	7.6	53.6	53.6	50.2	38.7	27.1	-
	62	57.3	6.8	57.3	57.3	57.3	45.8	34.4	22.9	52.7	7.5	52.7	52.7	52.7	41.1	29.5	17.9
	57	57.0	6.8	57.0	57.0	56.7	45.2	33.7	22.3	52.3	7.5	52.3	52.3	51.8	40.2	28.6	17.0
3000	72	65.2	7.1	65.2	54.3	41.5	28.8	-	-	58.6	7.8	58.6	52.4	39.4	26.3	-	-
	67	59.3	6.9	59.3	59.3	56.6	43.8	31.0	-	53.4	7.7	53.4	53.4	53.4	40.6	27.6	-
	62	57.2	6.9	57.2	57.2	57.2	44.4	31.7	18.9	52.6	7.6	52.6	52.6	52.6	39.6	26.6	13.6
	57	57.0	6.8	57.0	57.0	57.0	44.2	31.4	18.6	52.2	7.6	52.2	52.2	52.2	39.2	26.2	13.2

1. These capacities are gross ratings. For net capacity, deduct the supply air blower motor heat (MBh = 3.415 x kW). Refer to the appropriate Blower Performance Table for the kW of the supply air blower motor.
2. These ratings include the condenser fan motors (total 1 kW) and the compressor motors but not the supply air blower motor.

XXE08 (7.5 Ton)

Air on Evaporator Coil		Temperature of Air on Condenser Coil															
		Total Capacity[1] (MBh)	Total Input (kW)[2]	Sensible Capacity (MBh) Return Dry Bulb (°F)						Total Capacity[1] (MBh)	Total Input (kW)[2]	Sensible Capacity (MBh) Return Dry Bulb (°F)					
CFM	WB (°F)			90	85	80	75	70	65			90	85	80	75	70	65
		75°F								85°F							
1875	77	120.0	5.6	56.2	46.4	37.6	-	-	-	113.6	6.3	51.7	42.9	34.1	-	-	-
	72	110.4	5.5	67.3	58.5	49.6	40.8	-	-	104.2	6.2	64.1	55.3	46.5	37.7	-	-
	67	100.9	5.3	78.4	70.5	61.7	52.9	44.1	-	94.9	6.1	76.5	67.7	58.9	50.1	41.3	-
	62	93.8	5.3	93.8	93.8	87.2	76.8	67.9	59.1	87.4	6.1	87.4	83.9	70.8	62.0	53.2	44.4
2250	77	123.4	5.6	61.2	51.0	40.9	-	-	-	116.8	6.3	57.5	47.4	37.3	-	-	-
	72	113.6	5.5	74.3	64.2	54.0	43.9	-	-	107.2	6.3	71.1	60.9	50.8	40.7	-	-
	67	103.8	5.4	87.5	77.3	67.2	57.0	46.8	-	97.5	6.2	84.6	74.5	64.4	54.2	44.1	-
	62	96.5	5.3	96.5	96.5	93.2	83.1	72.9	62.7	89.8	6.1	89.8	87.5	77.4	67.2	57.1	47.0
	57	97.0	5.3	97.0	93.6	83.4	73.3	63.1	53.0	91.2	6.1	91.2	88.6	78.4	68.3	58.2	48.1
2625	77	126.9	5.6	66.3	55.7	44.2	-	-	-	120.0	6.4	63.4	51.9	40.4	-	-	-
	72	116.8	5.5	81.4	69.9	58.4	46.9	-	-	110.1	6.3	78.0	66.6	55.1	43.7	-	-
	67	106.7	5.4	96.6	84.1	72.6	61.1	49.6	-	100.2	6.2	92.7	81.3	69.8	58.4	46.9	-
	62	99.2	5.3	99.2	99.2	99.2	89.4	77.9	66.4	92.3	6.1	92.3	91.1	83.9	72.5	61.0	49.5
	57	99.7	5.3	99.7	98.0	90.2	78.7	67.2	55.7	93.7	6.1	93.7	92.4	85.1	73.6	62.2	50.7
3000	77	130.3	5.7	71.3	60.4	47.5	-	-	-	123.2	6.4	69.2	56.4	43.6	-	-	-
	72	120.0	5.6	88.5	75.6	62.8	49.9	-	-	113.0	6.3	85.0	72.2	59.4	46.6	-	-
	67	109.6	5.4	105.7	90.9	78.0	65.2	52.3	-	102.8	6.2	100.9	88.1	75.3	62.5	49.7	-
	62	101.9	5.4	101.9	101.9	101.9	95.7	82.8	70.0	94.7	6.2	94.7	94.7	90.5	77.7	64.9	52.1
	57	102.4	5.4	102.4	102.4	97.0	84.1	71.3	58.4	96.1	6.1	96.1	96.1	91.7	78.9	66.1	53.3
3375	72	122.7	5.6	95.9	81.7	67.5	53.3	-	-	115.2	6.3	91.8	77.8	63.7	49.6	-	-
	67	112.1	5.4	110.1	98.1	83.9	69.7	55.6	-	104.9	6.2	103.9	94.7	80.7	66.6	52.5	-
	62	104.2	5.4	104.2	104.2	104.2	97.5	83.3	69.1	96.6	6.2	96.6	96.6	94.5	80.4	66.3	52.3
	57	104.7	5.4	104.7	104.7	102.0	87.8	73.6	59.4	98.1	6.1	98.1	98.1	95.9	81.8	67.7	53.6
3750	72	125.4	5.6	103.3	87.8	72.3	56.7	-	-	117.5	6.3	98.7	83.3	68.0	52.6	-	-
	67	114.5	5.4	114.5	105.3	89.8	74.3	58.8	-	106.9	6.2	106.9	101.4	86.1	70.7	55.4	-
	62	106.5	5.4	106.5	106.5	106.5	99.3	83.8	68.3	98.5	6.2	98.5	98.5	98.5	83.2	67.8	52.5
	57	107.0	5.4	107.0	107.0	107.0	91.5	76.0	60.5	100.0	6.1	100.0	100.0	100.0	84.6	69.3	53.9
		95°F								105°F							
1875	77	107.3	7.1	47.2	39.4	30.7	-	-	-	99.5	8.1	42.3	36.9	28.2	-	-	-
	72	98.0	7.0	60.9	52.1	43.4	34.6	-	-	90.9	8.0	58.0	49.4	40.7	32.1	-	-
	67	88.8	7.0	74.6	64.9	56.1	47.3	38.6	-	82.3	7.9	73.8	61.9	53.2	44.5	35.9	-
	62	81.0	6.9	78.7	64.8	56.0	47.3	38.5	29.8	77.0	7.9	75.8	67.8	56.5	47.9	39.2	30.6
2250	77	110.2	7.1	53.8	43.8	33.7	-	-	-	102.0	8.1	51.1	41.1	31.1	-	-	-
	72	100.7	7.0	67.8	57.7	47.6	37.5	-	-	93.1	8.0	64.8	54.9	44.9	34.9	-	-
	67	91.2	7.0	81.7	71.6	61.6	51.5	41.4	-	84.3	7.9	78.6	68.6	58.6	48.6	38.7	-
	62	83.1	6.9	81.6	71.6	61.5	51.4	41.3	31.2	78.8	7.9	78.1	72.3	62.3	52.3	42.3	32.4
	57	85.4	6.9	85.4	83.5	73.4	63.3	53.3	43.2	80.2	7.9	80.2	78.2	68.2	58.2	48.2	38.2
2625	77	113.1	7.1	60.5	48.1	36.7	-	-	-	104.4	8.1	59.9	45.3	34.0	-	-	-
	72	103.3	7.0	74.7	63.3	51.8	40.4	-	-	95.3	8.0	71.7	60.3	49.0	37.7	-	-
	67	93.6	7.0	88.9	78.4	67.0	55.6	44.2	-	86.3	7.9	83.5	75.4	64.1	52.7	41.4	-
	62	85.3	6.9	84.6	78.3	66.9	55.5	44.1	32.7	80.7	7.9	80.3	76.9	68.1	56.8	45.5	34.1
	57	87.6	6.9	87.6	86.7	79.9	68.5	57.1	45.7	82.1	7.9	82.1	81.1	74.5	63.2	51.8	40.5
3000	77	116.0	7.1	67.1	52.4	39.7	-	-	-	106.8	8.1	68.7	49.5	36.8	-	-	-
	72	106.0	7.1	81.6	68.8	56.1	43.3	-	-	97.6	8.0	78.5	65.8	53.2	40.5	-	-
	67	96.0	7.0	96.0	85.2	72.5	59.8	47.0	-	88.3	7.9	88.3	82.2	69.5	56.8	44.2	-
	62	87.5	7.0	87.5	85.1	72.4	59.7	46.9	34.2	82.6	7.9	82.6	81.4	73.9	61.2	48.6	35.9
	57	89.9	6.9	89.9	89.9	86.4	73.7	61.0	48.2	84.0	7.9	84.0	84.0	80.8	68.1	55.5	42.8
3375	72	107.8	7.1	87.8	73.8	59.9	45.9	-	-	99.3	8.0	84.4	70.6	56.7	42.9	-	-
	67	97.7	7.0	97.7	91.4	77.4	63.5	49.5	-	89.9	8.0	89.9	86.3	74.1	60.3	46.4	-
	62	89.0	7.0	89.0	87.8	77.3	63.3	49.4	35.4	84.0	7.9	84.0	83.4	77.6	63.8	49.9	36.1
	57	91.4	6.9	91.4	91.4	89.7	75.7	61.8	47.8	85.5	7.9	85.5	85.5	83.9	70.0	56.1	42.3
3750	72	109.6	7.1	94.0	78.9	63.7	48.5	-	-	101.0	8.1	90.4	75.3	60.3	45.2	-	-
	67	99.3	7.0	99.3	97.5	82.3	67.1	52.0	-	91.4	8.0	91.4	90.5	78.8	63.7	48.7	-
	62	90.5	7.0	90.5	90.5	82.2	67.0	51.9	36.7	85.5	7.9	85.5	85.5	81.3	66.3	51.2	36.2
	57	92.9	6.9	92.9	92.9	92.9	77.8	62.6	47.4	86.9	7.9	86.9	86.9	86.9	71.9	56.8	41.8

XXE08 (7.5 Ton) (Continued)

Air on Evaporator Coil		Temperature of Air on Condenser Coil															
		Total Capacity[1] (MBh)	Total Input (kW)[2]	Sensible Capacity (MBh)						Total Capacity[1] (MBh)	Total Input (kW)[2]	Sensible Capacity (MBh)					
CFM	WB (°F)			Return Dry Bulb (°F)								Return Dry Bulb (°F)					
				90	85	80	75	70	65			90	85	80	75	70	65
		115°F								125°F							
1875	77	91.8	9.2	37.3	34.3	25.7	-	-	-	84.0	10.2	35.3	30.2	23.3	-	-	-
	72	83.8	9.1	55.1	46.6	38.0	29.5	-	-	76.6	10.1	52.3	43.8	35.3	26.9	-	-
	67	75.7	8.9	72.9	58.9	50.3	41.7	33.2	-	69.2	9.9	69.2	55.9	47.4	39.0	30.5	-
	62	73.0	8.9	73.0	70.8	57.0	48.5	39.9	31.4	69.0	9.9	69.0	69.0	57.6	49.1	40.6	32.2
2250	77	93.7	9.2	48.3	38.4	28.5	-	-	-	85.5	10.2	47.5	35.7	25.9	-	-	-
	72	85.5	9.0	61.9	52.0	42.1	32.2	-	-	78.0	10.0	59.0	49.2	39.3	29.5	-	-
	67	77.4	8.9	75.5	65.6	55.7	45.8	35.9	-	70.4	9.9	70.4	62.6	52.8	43.0	33.2	-
	62	74.5	8.9	74.5	73.1	63.2	53.3	43.4	33.5	70.2	9.9	70.2	70.2	64.0	54.2	44.4	34.6
	57	75.0	8.9	75.0	72.8	62.9	53.0	43.1	33.2	69.8	9.9	69.8	67.5	57.7	47.9	38.1	28.3
2625	77	95.7	9.1	59.3	42.5	31.3	-	-	-	87.0	10.2	59.7	41.3	28.6	-	-	-
	72	87.3	9.0	68.7	57.4	46.2	34.9	-	-	79.3	10.0	65.7	54.5	43.4	32.2	-	-
	67	79.0	8.9	78.0	72.3	61.1	49.9	38.6	-	71.7	9.9	71.7	69.3	58.1	47.0	35.8	-
	62	76.1	8.9	76.1	75.4	69.3	58.0	46.8	35.6	71.5	9.8	71.5	71.5	70.5	59.3	48.1	37.0
	57	76.5	8.9	76.5	75.5	69.0	57.8	46.5	35.3	71.0	9.9	71.0	69.9	63.6	52.4	41.3	30.1
3000	77	97.6	9.1	70.3	46.6	34.0	-	-	-	88.5	10.1	71.9	46.9	31.2	-	-	-
	72	89.1	9.0	75.4	62.9	50.3	37.7	-	-	80.7	10.0	72.4	59.9	47.4	34.8	-	-
	67	80.6	8.9	80.6	79.1	66.5	53.9	41.3	-	72.9	9.8	72.9	72.9	63.5	51.0	38.5	-
	62	77.7	8.9	77.7	77.7	75.4	62.8	50.2	37.6	72.7	9.8	72.7	72.7	72.7	64.4	51.9	39.4
	57	78.1	8.9	78.1	78.1	75.1	62.5	50.0	37.4	72.2	9.8	72.2	72.2	69.5	57.0	44.4	31.9
3375	72	90.7	9.0	81.1	67.3	53.6	39.8	-	-	82.2	10.0	77.7	64.1	50.4	36.8	-	-
	67	82.0	8.9	82.0	81.3	70.9	57.1	43.4	-	74.2	9.9	74.2	74.2	67.6	53.9	40.3	-
	62	79.1	8.9	79.1	79.1	77.9	64.2	50.4	36.7	74.1	9.8	74.1	74.1	74.1	64.6	50.9	37.3
	57	79.5	8.9	79.5	79.5	78.0	64.3	50.5	36.8	73.6	9.9	73.6	73.6	72.2	58.5	44.9	31.2
3750	72	92.3	9.1	86.7	71.8	56.9	42.0	-	-	83.7	10.1	83.0	68.2	53.5	38.7	-	-
	67	83.5	8.9	83.5	83.5	75.2	60.3	45.4	-	75.6	9.9	75.6	75.6	71.7	56.9	42.1	-
	62	80.4	8.9	80.4	80.4	80.4	65.5	50.6	35.7	75.4	9.9	75.4	75.4	75.4	64.8	50.0	35.2
	57	80.9	8.9	80.9	80.9	80.9	66.0	51.1	36.2	74.9	9.9	74.9	74.9	74.9	60.1	45.3	30.5

1. These capacities are gross ratings. For net capacity, deduct the supply air blower motor heat (MBh = 3.415 x kW). Refer to the appropriate Blower Performance Table for the kW of the supply air blower motor.
2. These ratings include the condenser fan motors (total 1 kW) and the compressor motors but not the supply air blower motor.

XXE09 (8.5 Ton)

Air on Evaporator Coil		Temperature of Air on Condenser Coil															
		Total Capacity[1] (MBh)	Total Input (kW)[2]	Sensible Capacity (MBh) Return Dry Bulb (°F)						Total Capacity[1] (MBh)	Total Input (kW)[2]	Sensible Capacity (MBh) Return Dry Bulb (°F)					
CFM	WB (°F)			90	85	80	75	70	65			90	85	80	75	70	65
		75°F								85°F							
2125	77	133.7	5.9	60.4	49.9	40.4	-	-	-	122.4	6.7	56.1	46.5	36.9	-	-	-
	72	122.6	5.8	72.9	63.5	54.0	44.6	-	-	113.0	6.6	70.1	60.5	50.9	41.3	-	-
	67	111.5	5.7	85.4	77.1	67.6	58.1	48.7	-	103.6	6.6	84.1	74.5	64.9	55.3	45.8	-
	62	102.4	5.7	102.4	91.5	79.4	69.9	60.5	51.0	94.6	6.5	94.6	89.1	75.8	66.2	56.7	47.1
2550	77	137.0	5.9	65.7	54.9	44.0	-	-	-	126.1	6.8	62.3	51.3	40.3	-	-	-
	72	125.7	5.8	80.5	69.7	58.8	48.0	-	-	116.4	6.7	77.6	66.6	55.6	44.6	-	-
	67	114.3	5.8	95.3	84.5	73.6	62.8	51.9	-	106.7	6.6	92.9	81.9	70.9	59.9	48.8	-
	62	105.0	5.7	105.0	97.7	86.5	75.6	64.8	53.9	97.4	6.6	97.4	93.8	82.8	71.8	60.7	49.7
	57	103.4	5.7	103.4	101.5	90.6	79.7	68.9	58.0	98.1	6.5	98.1	97.0	86.0	75.0	63.9	52.9
2975	77	140.4	6.0	71.1	59.9	47.6	-	-	-	129.7	6.8	68.5	56.1	43.7	-	-	-
	72	128.8	5.9	88.1	75.9	63.6	51.4	-	-	119.8	6.7	85.1	72.7	60.2	47.8	-	-
	67	117.1	5.8	105.2	91.9	79.6	67.4	55.1	-	109.8	6.6	101.7	89.3	76.8	64.4	51.9	-
	62	107.6	5.8	107.6	103.9	93.5	81.3	69.0	56.8	100.2	6.6	100.2	98.4	89.7	77.3	64.8	52.4
	57	105.9	5.7	105.9	104.9	98.0	85.8	73.5	61.2	101.0	6.6	101.0	100.4	93.2	80.7	68.3	55.8
3400	77	143.8	6.0	76.4	64.9	51.2	-	-	-	133.4	6.8	74.8	60.9	47.0	-	-	-
	72	131.8	5.9	95.8	82.1	68.4	54.8	-	-	123.1	6.8	92.6	78.8	64.9	51.0	-	-
	67	119.9	5.9	115.1	99.3	85.7	72.0	58.3	-	112.9	6.7	110.5	96.6	82.8	68.9	55.0	-
	62	110.1	5.8	110.1	110.1	100.6	87.0	73.3	59.6	103.0	6.6	103.0	103.0	96.6	82.8	68.9	55.0
	57	108.4	5.8	108.4	108.4	105.4	91.8	78.1	64.5	103.8	6.6	103.8	103.8	100.4	86.5	72.6	58.8
3825	72	132.2	5.9	100.7	86.2	71.7	57.2	-	-	125.1	6.8	98.3	83.5	68.6	53.7	-	-
	67	120.2	5.9	117.8	104.2	89.7	75.2	60.7	-	114.7	6.7	113.5	102.3	87.5	72.6	57.7	-
	62	110.4	5.8	110.4	110.4	105.7	91.2	76.7	62.1	104.7	6.6	104.7	104.7	101.5	86.6	71.7	56.8
	57	108.6	5.8	108.6	108.6	107.1	92.6	78.1	63.6	105.5	6.6	105.5	105.5	103.8	88.9	74.0	59.1
4250	72	132.6	6.0	105.7	90.3	75.0	59.6	-	-	127.1	6.8	104.0	88.2	72.3	56.4	-	-
	67	120.5	5.9	120.5	109.1	93.7	78.4	63.0	-	116.5	6.7	116.5	108.0	92.2	76.3	60.4	-
	62	110.7	5.8	110.7	110.7	110.7	95.4	80.0	64.6	106.3	6.6	106.3	106.3	106.3	90.4	74.6	58.7
	57	108.9	5.8	108.9	108.9	108.9	93.5	78.1	62.8	107.1	6.6	107.1	107.1	107.1	91.2	75.4	59.5
		95°F								105°F							
2125	77	111.2	7.6	51.7	43.1	33.4	-	-	-	101.6	8.5	46.7	40.0	30.3	-	-	-
	72	103.5	7.5	67.2	57.5	47.8	38.1	-	-	94.6	8.5	63.8	54.1	44.4	34.7	-	-
	67	95.8	7.4	82.7	71.9	62.2	52.5	42.8	-	87.5	8.4	81.0	68.2	58.5	48.7	39.0	-
	62	86.8	7.4	86.8	86.8	72.2	62.5	52.8	43.2	79.1	8.3	79.1	79.1	66.6	56.9	47.1	37.4
2550	77	115.1	7.6	58.9	47.7	36.5	-	-	-	105.7	8.6	56.1	44.7	33.4	-	-	-
	72	107.1	7.5	74.6	63.5	52.3	41.2	-	-	98.4	8.5	71.4	60.2	48.9	37.7	-	-
	67	99.1	7.5	90.4	79.3	68.1	56.9	45.8	-	91.1	8.4	86.7	75.7	64.4	53.2	41.9	-
	62	89.8	7.4	89.8	89.8	79.0	67.9	56.7	45.6	82.3	8.4	82.3	82.3	73.4	62.2	50.9	39.7
	57	92.9	7.4	92.9	92.5	81.3	70.2	59.0	47.8	84.8	8.4	84.8	84.6	74.8	63.6	52.3	41.1
2975	77	119.1	7.6	66.0	52.3	39.7	-	-	-	109.8	8.6	65.6	49.3	36.5	-	-	-
	72	110.8	7.5	82.1	69.5	56.8	44.2	-	-	102.2	8.5	79.0	66.3	53.5	40.7	-	-
	67	102.5	7.5	98.2	86.6	74.0	61.3	48.7	-	94.6	8.5	92.5	83.2	70.4	57.7	44.9	-
	62	92.9	7.4	92.9	92.9	85.9	73.2	60.6	48.0	85.5	8.4	85.5	85.5	80.2	67.5	54.7	41.9
	57	96.1	7.4	96.1	95.9	88.3	75.7	63.1	50.4	88.1	8.4	88.1	88.0	81.8	69.0	56.2	43.4
3400	77	123.0	7.6	73.2	56.9	42.8	-	-	-	113.9	8.6	75.1	53.9	39.6	-	-	-
	72	114.4	7.6	89.5	75.4	61.3	47.2	-	-	106.1	8.6	86.6	72.3	58.0	43.7	-	-
	67	105.9	7.5	105.9	93.9	79.8	65.7	51.6	-	98.2	8.5	98.2	90.7	76.4	62.1	47.8	-
	62	95.9	7.5	95.9	95.9	92.7	78.6	64.5	50.4	88.7	8.4	88.7	88.7	87.1	72.7	58.4	44.1
	57	99.2	7.4	99.2	99.2	95.3	81.2	67.1	53.0	91.4	8.4	91.4	91.4	88.7	74.4	60.1	45.8
3825	72	118.0	7.6	96.0	80.7	65.5	50.2	-	-	106.8	8.6	92.1	76.8	61.4	46.1	-	-
	67	109.2	7.5	109.2	100.5	85.2	69.9	54.7	-	98.9	8.5	98.9	93.8	80.9	65.6	50.3	-
	62	98.9	7.5	98.9	98.9	97.3	82.0	66.8	51.5	89.3	8.4	89.3	89.3	88.5	73.2	57.8	42.5
	57	102.3	7.5	102.3	102.3	100.4	85.1	69.9	54.6	92.0	8.4	92.0	92.0	90.7	75.4	60.0	44.7
4250	72	121.6	7.6	102.4	86.0	69.6	53.2	-	-	107.5	8.6	97.5	81.2	64.8	48.5	-	-
	67	112.5	7.5	112.5	107.0	90.6	74.2	57.7	-	99.5	8.5	99.5	96.8	85.4	69.1	52.7	-
	62	101.9	7.5	101.9	101.9	101.9	85.5	69.1	52.7	89.9	8.5	89.9	89.9	89.9	73.6	57.2	40.9
	57	105.4	7.5	105.4	105.4	105.4	89.0	72.6	56.2	92.7	8.4	92.7	92.7	92.7	76.3	60.0	43.6

XXE09 (8.5 Ton) (Continued)

Air on Evaporator Coil		Temperature of Air on Condenser Coil															
		Total Capacity[1] (MBh)	Total Input (kW)[2]	Sensible Capacity (MBh) Return Dry Bulb (°F)						Total Capacity[1] (MBh)	Total Input (kW)[2]	Sensible Capacity (MBh) Return Dry Bulb (°F)					
CFM	WB (°F)			90	85	80	75	70	65			90	85	80	75	70	65
		115°F								125°F							
2125	77	91.9	9.5	41.6	37.0	27.2	-	-	-	82.3	10.5	43.1	33.2	24.2	-	-	-
	72	85.6	9.4	60.5	50.7	41.0	31.2	-	-	76.7	10.4	57.1	47.3	37.5	27.7	-	-
	67	79.3	9.3	79.3	64.4	54.7	44.9	35.1	-	71.1	10.3	71.1	60.7	50.9	41.1	31.3	-
	62	71.4	9.3	71.4	71.4	61.0	51.2	41.4	31.7	63.7	10.2	63.7	63.7	55.3	45.5	35.7	25.9
2550	77	96.3	9.5	53.4	41.6	30.3	-	-	-	86.8	10.5	55.1	38.6	27.2	-	-	-
	72	89.6	9.5	68.2	56.9	45.5	34.2	-	-	80.9	10.4	65.0	53.6	42.1	30.7	-	-
	67	83.0	9.4	83.0	72.1	60.8	49.4	38.1	-	75.0	10.3	75.0	68.6	57.1	45.7	34.2	-
	62	74.7	9.3	74.7	74.7	67.8	56.4	45.1	33.7	67.2	10.2	67.2	67.2	62.2	50.7	39.3	27.8
	57	76.6	9.3	76.6	76.6	68.3	57.0	45.6	34.3	68.5	10.3	68.5	68.5	61.8	50.4	38.9	27.5
2975	77	100.6	9.6	65.2	46.3	33.3	-	-	-	91.3	10.6	67.0	44.0	30.2	-	-	-
	72	93.7	9.5	76.0	63.1	50.1	37.2	-	-	85.1	10.5	72.9	59.9	46.8	33.7	-	-
	67	86.8	9.4	86.8	79.8	66.9	54.0	41.0	-	78.9	10.4	78.9	76.5	63.4	50.3	37.2	-
	62	78.1	9.3	78.1	78.1	74.6	61.7	48.7	35.8	70.7	10.3	70.7	70.7	69.0	55.9	42.8	29.7
	57	80.1	9.3	80.1	80.1	75.2	62.3	49.3	36.4	72.1	10.3	72.1	72.1	68.6	55.6	42.5	29.4
3400	77	104.9	9.6	77.0	50.9	36.4	-	-	-	95.8	10.6	78.9	49.5	33.2	-	-	-
	72	97.7	9.5	83.7	69.2	54.7	40.2	-	-	89.3	10.5	80.9	66.1	51.4	36.7	-	-
	67	90.5	9.5	90.5	87.5	73.0	58.5	44.0	-	82.8	10.4	82.8	82.8	69.6	54.9	40.1	-
	62	81.4	9.4	81.4	81.4	81.4	66.9	52.4	37.9	74.2	10.3	74.2	74.2	74.2	61.1	46.4	31.6
	57	83.5	9.4	83.5	83.5	82.1	67.6	53.0	38.5	75.7	10.4	75.7	75.7	75.5	60.7	46.0	31.3
3825	72	95.6	9.6	88.2	72.8	57.4	42.0	-	-	84.4	10.5	84.4	68.9	53.4	37.9	-	-
	67	88.5	9.5	88.5	87.1	76.6	61.2	45.8	-	78.2	10.5	78.2	78.2	72.4	56.9	41.4	-
	62	79.7	9.4	79.7	79.7	79.7	64.3	48.9	33.5	70.1	10.4	70.1	70.1	70.1	55.4	39.9	24.4
	57	81.7	9.4	81.7	81.7	81.0	65.6	50.2	34.8	71.4	10.4	71.4	71.4	71.3	55.8	40.3	24.9
4250	72	93.5	9.6	92.7	76.4	60.1	43.8	-	-	79.4	10.6	79.4	71.6	55.4	39.2	-	-
	67	86.6	9.5	86.6	86.6	80.3	64.0	47.7	-	73.6	10.5	73.6	73.6	73.6	58.9	42.6	-
	62	77.9	9.4	77.9	77.9	77.9	61.6	45.3	29.0	65.9	10.4	65.9	65.9	65.9	49.7	33.5	17.2
	57	79.9	9.4	79.9	79.9	79.9	63.6	47.3	31.0	67.1	10.4	67.1	67.1	67.1	50.9	34.7	18.4

1. These capacities are gross ratings. For net capacity, deduct the supply air blower motor heat (MBh = 3.415 x kW). Refer to the appropriate Blower Performance Table for the kW of the supply air blower motor.
2. These ratings include the condenser fan motors (total 1 kW) and the compressor motors but not the supply air blower motor.

XXE12 (10 Ton)

Air on Evaporator Coil		Temperature of Air on Condenser Coil															
		Total Capacity[1] (MBh)	Total Input (kW)[2]	Sensible Capacity (MBh) Return Dry Bulb (°F)						Total Capacity[1] (MBh)	Total Input (kW)[2]	Sensible Capacity (MBh) Return Dry Bulb (°F)					
CFM	WB (°F)			90	85	80	75	70	65			90	85	80	75	70	65
		75°F								85°F							
2500	77	156.2	7.1	61.6	50.8	40.3	-	-	-	144.8	8.1	60.9	50.6	40.4	-	-	-
	72	142.8	7.0	81.0	70.5	60.0	49.5	-	-	132.8	8.0	78.5	68.2	58.0	47.7	-	-
	67	129.3	6.9	100.3	90.2	79.7	69.2	58.7	-	120.8	7.9	96.1	85.8	75.5	65.3	55.0	-
	62	115.8	6.8	115.8	106.9	93.0	82.5	72.0	61.5	109.2	7.8	109.2	103.7	88.5	78.3	68.0	57.7
3000	77	160.5	7.2	67.8	55.8	43.7	-	-	-	148.8	8.1	67.7	55.9	44.1	-	-	-
	72	146.7	7.1	89.2	77.2	65.1	53.1	-	-	136.4	8.0	86.9	75.1	63.3	51.5	-	-
	67	132.9	6.9	110.6	98.5	86.5	74.5	62.5	-	124.1	7.9	106.2	94.3	82.5	70.7	58.9	-
	62	119.0	6.8	119.0	113.0	101.0	89.0	77.0	64.9	112.2	7.8	112.2	108.6	96.7	84.9	73.1	61.3
	57	117.1	6.7	117.1	117.1	106.6	94.6	82.6	70.6	111.7	7.7	111.7	111.7	100.6	88.8	77.0	65.2
3500	77	164.7	7.2	74.0	60.7	47.2	-	-	-	152.8	8.2	74.5	61.2	47.8	-	-	-
	72	150.6	7.1	97.4	83.8	70.3	56.7	-	-	140.1	8.1	95.4	82.0	68.7	55.3	-	-
	67	136.4	7.0	120.8	106.9	93.4	79.8	66.3	-	127.4	7.9	116.2	102.9	89.5	76.2	62.8	-
	62	122.1	6.9	122.1	119.2	109.0	95.5	81.9	68.4	115.2	7.8	115.2	113.4	104.9	91.6	78.2	64.9
	57	120.2	6.8	120.2	120.2	115.1	101.6	88.0	74.5	114.7	7.8	114.7	114.7	109.1	95.8	82.4	69.1
4000	77	169.0	7.3	80.2	65.7	50.6	-	-	-	156.7	8.2	81.4	66.5	51.6	-	-	-
	72	154.5	7.2	105.6	90.5	75.4	60.4	-	-	143.8	8.1	103.8	88.9	74.0	59.1	-	-
	67	140.0	7.1	131.0	115.3	100.3	85.2	70.1	-	130.8	8.0	126.3	111.4	96.5	81.6	66.7	-
	62	125.3	6.9	125.3	125.3	117.0	102.0	86.9	71.8	118.2	7.9	118.2	118.2	113.1	98.2	83.3	68.4
	57	123.4	6.8	123.4	123.4	123.4	108.5	93.4	78.4	117.7	7.8	117.7	117.7	117.7	102.8	87.9	73.0
4500	72	156.5	7.1	112.2	96.1	80.0	63.8	-	-	145.4	8.1	110.7	94.7	78.8	62.8	-	-
	67	141.8	7.0	137.3	122.4	106.3	90.1	74.0	-	132.3	8.0	130.1	118.6	102.7	86.7	70.7	-
	62	126.9	6.9	126.9	126.9	122.8	106.7	90.5	74.4	119.6	7.8	119.6	119.6	117.0	101.1	85.1	69.1
	57	125.0	6.8	125.0	125.0	125.0	109.0	92.8	76.7	119.0	7.8	119.0	119.0	119.0	103.1	87.1	71.1
5000	72	158.5	7.1	118.8	101.6	84.5	67.3	-	-	147.1	8.0	117.6	100.5	83.5	66.4	-	-
	67	143.6	6.9	143.6	129.5	112.3	95.1	77.9	-	133.8	7.9	133.8	125.9	108.8	91.8	74.7	-
	62	128.6	6.8	128.6	128.6	128.6	111.4	94.2	77.0	121.0	7.8	121.0	121.0	121.0	103.9	86.9	69.8
	57	126.6	6.7	126.6	126.6	126.6	109.4	92.2	75.1	120.4	7.8	120.4	120.4	120.4	103.4	86.3	69.3
		95°F								105°F							
2500	77	133.4	9.1	60.2	50.5	40.4	-	-	-	118.3	10.2	53.4	46.0	36.0	-	-	-
	72	122.8	9.0	76.0	66.0	55.9	45.9	-	-	110.0	10.1	71.7	61.7	51.7	41.7	-	-
	67	112.2	8.8	91.8	81.5	71.4	61.4	51.3	-	101.8	10.0	90.1	77.5	67.5	57.5	47.5	-
	62	102.6	8.7	102.6	100.6	84.1	74.1	64.0	53.9	94.1	9.9	94.1	93.1	78.5	68.5	58.5	48.5
3000	77	137.1	9.1	67.7	56.1	44.5	-	-	-	122.3	10.2	62.7	51.2	39.7	-	-	-
	72	126.2	9.0	84.7	73.1	61.5	49.9	-	-	113.8	10.1	80.1	68.6	57.1	45.6	-	-
	67	115.3	8.9	101.8	90.1	78.5	66.9	55.3	-	105.3	10.0	97.5	86.0	74.5	63.0	51.4	-
	62	105.4	8.8	105.4	104.1	92.5	80.9	69.3	57.7	97.3	10.0	97.3	96.6	86.6	75.1	63.6	52.1
	57	106.2	8.7	106.2	106.2	94.6	83.0	71.4	59.8	95.6	9.9	95.6	95.6	85.8	74.3	62.8	51.2
3500	77	140.8	9.1	75.1	61.6	48.5	-	-	-	126.4	10.2	72.1	56.4	43.4	-	-	-
	72	129.6	9.0	93.4	80.2	67.1	53.9	-	-	117.6	10.1	88.5	75.4	62.4	49.4	-	-
	67	118.4	8.9	111.7	98.8	85.6	72.5	59.3	-	108.8	10.0	104.9	94.5	81.5	68.4	55.4	-
	62	108.2	8.8	108.2	107.6	100.8	87.7	74.5	61.4	100.5	10.0	100.5	100.2	94.7	81.7	68.7	55.7
	57	109.1	8.8	109.1	109.1	103.2	90.0	76.9	63.7	98.8	9.9	98.8	98.8	93.8	80.8	67.8	54.8
4000	77	144.5	9.1	82.5	67.2	52.5	-	-	-	130.4	10.2	81.4	61.6	47.1	-	-	-
	72	133.0	9.0	102.1	87.3	72.6	57.9	-	-	121.3	10.1	96.8	82.3	67.8	53.3	-	-
	67	121.6	8.9	121.6	107.5	92.7	78.0	63.3	-	112.3	10.1	112.3	103.0	88.5	73.9	59.4	-
	62	111.1	8.8	111.1	111.1	109.2	94.5	79.8	65.1	103.8	10.0	103.8	103.8	102.8	88.3	73.8	59.3
	57	112.0	8.8	112.0	112.0	111.7	97.0	82.3	67.6	102.0	9.9	102.0	102.0	101.9	87.3	72.8	58.3
4500	72	134.4	9.0	109.2	93.4	77.6	61.7	-	-	122.3	10.1	103.9	88.3	72.6	57.0	-	-
	67	122.8	8.9	122.8	114.9	99.0	83.2	67.4	-	113.2	10.0	113.2	108.1	94.8	79.1	63.5	-
	62	112.2	8.8	112.2	112.2	111.3	95.5	79.7	63.8	104.6	10.0	104.6	104.6	104.1	88.5	72.8	57.2
	57	113.1	8.8	113.1	113.1	113.0	97.2	81.4	65.5	102.8	9.9	102.8	102.8	102.7	87.1	71.4	55.8
5000	72	135.8	9.0	116.3	99.4	82.5	65.6	-	-	123.3	10.1	111.0	94.2	77.4	60.7	-	-
	67	124.1	8.9	124.1	122.3	105.3	88.4	71.5	-	114.1	10.0	114.1	113.2	101.1	84.3	67.5	-
	62	113.4	8.8	113.4	113.4	113.4	96.5	79.5	62.6	105.4	9.9	105.4	105.4	105.4	88.7	71.9	55.1
	57	114.3	8.8	114.3	114.3	114.3	97.3	80.4	63.5	103.6	9.9	103.6	103.6	103.6	86.8	70.0	53.3

XXE12 (10 Ton) (Continued)

Air on Evaporator Coil		Temperature of Air on Condenser Coil															
		Total Capacity[1] (MBh)	Total Input (kW)[2]	Sensible Capacity (MBh) Return Dry Bulb (°F)						Total Capacity[1] (MBh)	Total Input (kW)[2]	Sensible Capacity (MBh) Return Dry Bulb (°F)					
CFM	WB (°F)			90	85	80	75	70	65			90	85	80	75	70	65
		115°F								125°F							
2500	77	103.2	11.4	46.5	41.4	31.5	-	-	-	88.1	12.5	45.2	36.8	27.0	-	-	-
	72	97.3	11.3	67.4	57.4	47.5	37.6	-	-	84.5	12.5	63.1	53.2	43.3	33.4	-	-
	67	91.4	11.2	88.3	73.5	63.5	53.6	43.6	-	81.0	12.4	81.0	69.4	59.5	49.7	39.8	-
	62	85.6	11.2	85.6	85.6	72.8	62.9	52.9	43.0	77.1	12.4	77.1	77.1	67.2	57.3	47.4	37.5
3000	77	107.6	11.4	57.7	46.3	34.9	-	-	-	92.8	12.5	56.5	41.4	30.1	-	-	-
	72	101.4	11.3	75.5	64.1	52.6	41.2	-	-	89.0	12.4	70.8	59.5	48.2	36.9	-	-
	67	95.2	11.2	93.2	81.8	70.4	59.0	47.6	-	85.2	12.4	85.2	77.6	66.3	55.0	43.7	-
	62	89.2	11.1	89.2	89.2	80.7	69.3	57.9	46.5	81.1	12.3	81.1	81.1	74.8	63.5	52.2	40.9
	57	85.0	11.1	85.0	85.0	76.9	65.5	54.1	42.7	74.5	12.2	74.5	74.5	68.1	56.8	45.5	34.1
3500	77	111.9	11.4	69.0	51.2	38.3	-	-	-	97.5	12.5	67.8	46.1	33.2	-	-	-
	72	105.5	11.3	83.5	70.7	57.8	44.9	-	-	93.5	12.4	78.6	65.9	53.2	40.4	-	-
	67	99.1	11.2	98.1	90.1	77.3	64.4	51.5	-	89.5	12.4	89.5	85.8	73.1	60.4	47.6	-
	62	92.8	11.1	92.8	92.8	88.6	75.7	62.8	50.0	85.1	12.3	85.1	85.1	82.5	69.7	57.0	44.3
	57	88.5	11.0	88.5	88.5	84.4	71.6	58.7	45.8	78.2	12.2	78.2	78.2	75.1	62.4	49.6	36.9
4000	77	116.3	11.3	80.3	56.1	41.7	-	-	-	102.2	12.4	79.1	50.8	36.3	-	-	-
	72	109.7	11.3	91.6	77.3	62.9	48.6	-	-	98.0	12.4	86.4	72.3	58.1	43.9	-	-
	67	103.0	11.2	103.0	98.5	84.2	69.8	55.5	-	93.7	12.4	93.7	93.7	79.9	65.7	51.5	-
	62	96.5	11.1	96.5	96.5	96.5	82.1	67.8	53.5	89.2	12.3	89.2	89.2	89.2	76.0	61.8	47.6
	57	92.0	11.0	92.0	92.0	92.0	77.6	63.3	48.9	82.0	12.2	82.0	82.0	82.0	67.9	53.8	39.6
4500	72	110.2	11.2	98.7	83.2	67.7	52.2	-	-	98.2	12.3	93.4	78.1	62.7	47.4	-	-
	67	103.5	11.2	103.5	101.3	90.5	75.0	59.5	-	93.9	12.3	93.9	93.9	86.2	70.9	55.6	-
	62	97.0	11.1	97.0	97.0	97.0	81.5	66.0	50.5	89.4	12.2	89.4	89.4	89.4	74.5	59.2	43.9
	57	92.5	11.0	92.5	92.5	92.5	77.0	61.5	46.0	82.1	12.1	82.1	82.1	82.1	66.9	51.5	36.2
5000	72	110.8	11.2	105.7	89.0	72.4	55.8	-	-	98.3	12.3	98.3	83.9	67.4	50.9	-	-
	67	104.1	11.1	104.1	104.1	96.8	80.2	63.5	-	94.1	12.2	94.1	94.1	92.5	76.1	59.6	-
	62	97.5	11.1	97.5	97.5	97.5	80.9	64.2	47.6	89.6	12.2	89.6	89.6	89.6	73.1	56.6	40.1
	57	92.9	11.0	92.9	92.9	92.9	76.3	59.7	43.0	82.3	12.1	82.3	82.3	82.3	65.8	49.3	32.8

1. These capacities are gross ratings. For net capacity, deduct the supply air blower motor heat (MBh = 3.415 x kW). Refer to the appropriate Blower Performance Table for the kW of the supply air blower motor.
2. These ratings include the condenser fan motors (total 1 kW) and the compressor motors but not the supply air blower motor.

XQE04 (3 Ton)

Air on Evaporator Coil		Temperature of Air on Condenser Coil															
		Total Capacity[1] (MBh)	Total Input (kW)[2]	Sensible Capacity (MBh) Return Dry Bulb (°F)						Total Capacity[1] (MBh)	Total Input (kW)[2]	Sensible Capacity (MBh) Return Dry Bulb (°F)					
CFM	WB (°F)			90	85	80	75	70	65			90	85	80	75	70	65
		75°F								85°F							
750	77	49.1	2.0	23.0	18.6	15.0	-	-	-	45.0	2.4	20.4	16.9	13.3	-	-	-
	72	44.8	2.0	27.2	23.6	20.0	16.4	-	-	41.3	2.4	25.4	21.9	18.3	14.7	-	-
	67	40.5	2.0	31.5	28.6	25.0	21.4	17.8	-	37.6	2.4	30.4	26.9	23.3	19.7	16.2	-
	62	36.9	2.0	36.9	35.4	29.9	26.3	22.7	19.1	34.2	2.4	34.2	33.5	28.0	24.4	20.8	17.3
900	77	50.0	2.1	24.5	20.3	16.2	-	-	-	46.0	2.4	22.8	18.6	14.4	-	-	-
	72	45.7	2.1	29.8	25.7	21.5	17.3	-	-	42.2	2.4	28.2	24.0	19.9	15.7	-	-
	67	41.3	2.1	35.2	31.0	26.9	22.7	18.5	-	38.4	2.4	33.6	29.4	25.3	21.1	17.0	-
	62	37.6	2.1	37.6	36.7	32.2	28.0	23.9	19.7	35.0	2.4	35.0	34.5	30.3	26.2	22.0	17.9
	57	37.1	2.0	37.1	37.1	33.2	29.1	24.9	20.7	34.8	2.3	34.8	34.8	30.9	26.8	22.6	18.5
1050	77	51.0	2.1	26.0	22.0	17.3	-	-	-	47.0	2.4	25.1	20.3	15.6	-	-	-
	72	46.5	2.1	32.5	27.8	23.0	18.3	-	-	43.1	2.4	30.9	26.2	21.4	16.7	-	-
	67	42.1	2.1	38.9	33.5	28.7	24.0	19.3	-	39.3	2.4	36.8	32.0	27.3	22.5	17.8	-
	62	38.4	2.1	38.4	37.9	34.4	29.7	25.0	20.3	35.7	2.4	35.7	35.5	32.7	28.0	23.2	18.5
	57	37.8	2.1	37.8	37.8	35.6	30.9	26.1	21.4	35.6	2.3	35.6	35.6	33.4	28.6	23.9	19.1
1200	77	51.9	2.1	27.6	23.8	18.5	-	-	-	48.0	2.4	27.4	22.1	16.7	-	-	-
	72	47.4	2.1	35.1	29.8	24.5	19.3	-	-	44.0	2.4	33.7	28.4	23.0	17.6	-	-
	67	42.9	2.1	42.7	35.9	30.6	25.3	20.0	-	40.1	2.4	40.0	34.6	29.3	23.9	18.5	-
	62	39.1	2.1	39.1	39.1	36.7	31.4	26.1	20.8	36.5	2.4	36.5	36.5	35.1	29.8	24.4	19.0
	57	38.5	2.1	38.5	38.5	37.9	32.6	27.3	22.1	36.3	2.3	36.3	36.3	35.8	30.5	25.1	19.7
1350	72	47.6	2.1	37.4	31.5	25.6	19.7	-	-	44.1	2.4	35.8	29.8	23.9	17.9	-	-
	67	43.1	2.1	43.0	37.8	32.0	26.1	20.2	-	40.2	2.4	40.1	36.3	30.4	24.4	18.5	-
	62	39.2	2.1	39.2	39.2	38.1	32.2	26.3	20.4	36.6	2.4	36.6	36.6	35.9	29.9	24.0	18.0
	57	38.7	2.1	38.7	38.7	38.4	32.5	26.6	20.7	36.4	2.4	36.4	36.4	36.2	30.2	24.2	18.3
1500	72	47.8	2.1	39.6	33.1	26.7	20.2	-	-	44.3	2.4	37.8	31.3	24.7	18.2	-	-
	67	43.2	2.1	43.2	39.8	33.3	26.8	20.3	-	40.3	2.4	40.3	38.0	31.5	24.9	18.4	-
	62	39.4	2.1	39.4	39.4	39.4	32.9	26.5	20.0	36.7	2.4	36.7	36.7	36.7	30.1	23.6	17.0
	57	38.8	2.1	38.8	38.8	38.8	32.4	25.9	19.4	36.5	2.4	36.5	36.5	36.5	30.0	23.4	16.9
		95°F								105°F							
750	77	41.0	2.8	17.9	15.1	11.6	-	-	-	38.3	3.1	15.7	13.9	10.4	-	-	-
	72	37.8	2.7	23.6	20.1	16.6	13.1	-	-	35.1	3.1	22.3	18.8	15.3	11.8	-	-
	67	34.7	2.7	29.4	25.1	21.6	18.1	14.6	-	32.0	3.0	29.0	23.7	20.2	16.7	13.2	-
	62	31.6	2.7	31.6	31.6	26.0	22.5	19.0	15.5	29.6	3.1	29.6	29.6	23.9	20.3	16.8	13.3
900	77	42.0	2.7	21.0	16.9	12.7	-	-	-	39.1	3.1	19.8	15.6	11.4	-	-	-
	72	38.8	2.7	26.5	22.4	18.2	14.1	-	-	35.9	3.1	25.2	21.0	16.9	12.7	-	-
	67	35.6	2.7	32.0	27.9	23.7	19.6	15.4	-	32.7	3.0	30.6	26.5	22.3	18.1	13.9	-
	62	32.4	2.7	32.4	32.4	28.5	24.4	20.2	16.1	30.2	3.0	30.2	30.2	26.3	22.1	18.0	13.8
	57	32.6	2.7	32.6	32.6	28.7	24.5	20.4	16.2	30.4	3.0	30.4	30.4	26.3	22.2	18.0	13.8
1050	77	43.0	2.7	24.2	18.6	13.8	-	-	-	39.9	3.1	23.9	17.3	12.5	-	-	-
	72	39.7	2.7	29.4	24.6	19.8	15.0	-	-	36.6	3.0	28.1	23.3	18.4	13.6	-	-
	67	36.4	2.6	34.7	30.6	25.8	21.0	16.2	-	33.3	3.0	32.3	29.2	24.4	19.5	14.7	-
	62	33.1	2.7	33.1	33.1	31.0	26.2	21.4	16.6	30.8	3.0	30.8	30.8	28.8	23.9	19.1	14.3
	57	33.4	2.6	33.4	33.4	31.2	26.4	21.6	16.8	31.0	3.0	31.0	31.0	28.8	24.0	19.1	14.3
1200	77	44.1	2.7	27.3	20.4	15.0	-	-	-	40.7	3.0	27.9	19.0	13.5	-	-	-
	72	40.7	2.7	32.3	26.9	21.4	16.0	-	-	37.3	3.0	31.0	25.5	20.0	14.5	-	-
	67	37.3	2.6	37.3	33.3	27.9	22.5	17.0	-	34.0	3.0	34.0	31.9	26.4	20.9	15.5	-
	62	33.9	2.6	33.9	33.9	33.5	28.1	22.7	17.2	31.5	3.0	31.5	31.5	31.2	25.7	20.2	14.7
	57	34.2	2.6	34.2	34.2	33.7	28.3	22.8	17.4	31.6	3.0	31.6	31.6	31.2	25.7	20.3	14.8
1350	72	40.7	2.7	34.2	28.1	22.1	16.1	-	-	37.5	3.0	32.9	26.8	20.7	14.6	-	-
	67	37.3	2.6	37.3	34.8	28.8	22.7	16.7	-	34.2	3.0	34.2	32.9	27.4	21.3	15.2	-
	62	33.9	2.7	33.9	33.9	33.7	27.7	21.7	15.7	31.6	3.0	31.6	31.6	31.5	25.4	19.3	13.2
	57	34.2	2.6	34.2	34.2	33.9	27.9	21.9	15.9	31.7	3.0	31.7	31.7	31.6	25.5	19.4	13.3
1500	72	40.7	2.7	36.0	29.4	22.8	16.1	-	-	37.7	3.1	34.9	28.2	21.4	14.7	-	-
	67	37.3	2.7	37.3	36.2	29.6	23.0	16.4	-	34.3	3.0	34.3	33.8	28.4	21.7	15.0	-
	62	34.0	2.7	34.0	34.0	34.0	27.3	20.7	14.1	31.7	3.0	31.7	31.7	31.7	25.0	18.3	11.6
	57	34.2	2.7	34.2	34.2	34.2	27.5	20.9	14.3	31.9	3.0	31.9	31.9	31.9	25.2	18.5	11.8

XQE04 (3 Ton) (Continued)

Air on Evaporator Coil		Temperature of Air on Condenser Coil															
		Total Capacity[1] (MBh)	Total Input (kW)[2]	Sensible Capacity (MBh) Return Dry Bulb (°F)						Total Capacity[1] (MBh)	Total Input (kW)[2]	Sensible Capacity (MBh) Return Dry Bulb (°F)					
CFM	WB (°F)			90	85	80	75	70	65			90	85	80	75	70	65
		115°F								125°F							
750	77	35.6	3.4	13.5	12.6	9.1	-	-	-	32.9	3.8	12.9	10.6	7.9	-	-	-
	72	32.4	3.4	21.0	17.5	14.0	10.4	-	-	29.7	3.8	19.7	16.2	12.6	9.1	-	-
	67	29.3	3.4	28.5	22.3	18.8	15.3	11.7	-	26.6	3.8	26.6	20.9	17.4	13.8	10.3	-
	62	27.6	3.4	27.6	27.6	21.7	18.2	14.7	11.1	25.7	3.8	25.7	25.7	19.6	16.1	12.5	9.0
900	77	36.1	3.4	18.5	14.3	10.1	-	-	-	33.2	3.8	18.3	13.0	8.8	-	-	-
	72	33.0	3.4	23.9	19.7	15.5	11.3	-	-	30.0	3.8	22.6	18.3	14.1	9.9	-	-
	67	29.8	3.4	29.3	25.1	20.9	16.7	12.5	-	26.8	3.8	26.8	23.7	19.4	15.2	11.0	-
	62	28.1	3.4	28.1	28.1	24.1	19.9	15.7	11.5	25.9	3.8	25.9	25.9	21.9	17.7	13.5	9.2
	57	28.2	3.4	28.2	28.2	24.0	19.8	15.6	11.4	26.0	3.7	26.0	26.0	21.7	17.5	13.3	9.0
1050	77	36.7	3.4	23.5	16.0	11.1	-	-	-	33.6	3.7	23.7	15.5	9.7	-	-	-
	72	33.5	3.4	26.8	21.9	17.0	12.1	-	-	30.4	3.7	25.4	20.5	15.6	10.7	-	-
	67	30.2	3.4	30.0	27.8	22.9	18.0	13.2	-	27.1	3.7	27.1	26.4	21.5	16.5	11.6	-
	62	28.5	3.4	28.5	28.5	26.5	21.6	16.7	11.9	26.2	3.7	26.2	26.2	24.2	19.3	14.4	9.5
	57	28.6	3.4	28.6	28.6	26.4	21.5	16.6	11.8	26.2	3.7	26.2	26.2	24.0	19.1	14.2	9.3
1200	77	37.3	3.4	28.6	17.7	12.1	-	-	-	33.9	3.7	29.2	18.0	10.7	-	-	-
	72	34.0	3.4	29.6	24.1	18.5	13.0	-	-	30.7	3.7	28.3	22.7	17.1	11.5	-	-
	67	30.7	3.3	30.7	30.5	25.0	19.4	13.9	-	27.4	3.7	27.4	27.4	23.5	17.9	12.3	-
	62	29.0	3.3	29.0	29.0	28.9	23.3	17.8	12.2	26.5	3.7	26.5	26.5	26.5	20.9	15.3	9.7
	57	29.1	3.3	29.1	29.1	28.8	23.2	17.7	12.1	26.5	3.7	26.5	26.5	26.3	20.7	15.1	9.5
1350	72	34.3	3.4	31.7	25.5	19.3	13.2	-	-	31.2	3.7	30.4	24.2	17.9	11.7	-	-
	67	31.0	3.4	31.0	30.9	26.0	19.9	13.7	-	27.9	3.7	27.9	27.9	24.7	18.4	12.2	-
	62	29.3	3.4	29.3	29.3	29.2	23.0	16.9	10.7	26.9	3.7	26.9	26.9	26.9	20.7	14.4	8.2
	57	29.3	3.3	29.3	29.3	29.2	23.0	16.8	10.7	26.9	3.7	26.9	26.9	26.8	20.6	14.3	8.1
1500	72	34.7	3.4	33.7	26.9	20.1	13.3	-	-	31.6	3.7	31.6	25.7	18.8	11.9	-	-
	67	31.3	3.4	31.3	31.3	27.1	20.3	13.5	-	28.3	3.7	28.3	28.3	25.8	19.0	12.1	-
	62	29.5	3.4	29.5	29.5	29.5	22.7	15.9	9.2	27.3	3.7	27.3	27.3	27.3	20.4	13.6	6.7
	57	29.6	3.4	29.6	29.6	29.6	22.8	16.0	9.2	27.3	3.7	27.3	27.3	27.3	20.5	13.6	6.7

1. These capacities are gross ratings. For net capacity, deduct the supply air blower motor heat (MBh = 3.415 x kW). Refer to the appropriate Blower Performance Table for the kW of the supply air blower motor.
2. These ratings include the condenser fan motors (total 1 kW) and the compressor motors but not the supply air blower motor.

XQE05 (4 Ton)

Air on Evaporator Coil		Temperature of Air on Condenser Coil															
		Total Capacity[1] (MBh)	Total Input (kW)[2]	Sensible Capacity (MBh) Return Dry Bulb (°F)						Total Capacity[1] (MBh)	Total Input (kW)[2]	Sensible Capacity (MBh) Return Dry Bulb (°F)					
CFM	WB (°F)			90	85	80	75	70	65			90	85	80	75	70	65
		75°F								85°F							
1000	77	63.6	2.8	30.9	26.6	22.3	-	-	-	60.1	3.1	29.2	24.9	20.7	-	-	-
	72	58.2	2.8	37.5	32.2	27.0	21.8	-	-	54.9	3.1	36.1	30.9	25.6	20.4	-	-
	67	52.8	2.7	44.1	37.9	31.7	26.4	21.1	-	49.7	3.1	43.1	36.8	30.5	25.2	19.9	-
	62	48.9	2.7	44.1	40.2	36.4	30.7	25.6	20.2	46.6	3.1	44.1	39.8	35.5	29.9	24.6	19.2
1200	77	64.6	2.8	34.6	28.4	22.3	-	-	-	60.8	3.1	33.2	27.0	20.8	-	-	-
	72	59.9	2.8	41.1	34.8	28.5	22.1	-	-	56.4	3.1	39.7	33.4	27.1	20.7	-	-
	67	55.2	2.7	47.6	41.1	34.6	28.2	21.8	-	52.0	3.1	46.3	39.8	33.3	26.9	20.5	-
	62	52.0	2.7	47.6	44.2	40.8	34.0	27.8	21.2	49.6	3.1	47.1	43.3	39.6	32.9	26.6	20.1
	57	48.9	2.7	47.6	47.3	46.9	40.3	33.7	27.1	47.1	3.1	47.1	46.8	45.8	39.2	32.7	26.1
1400	77	65.6	2.8	38.3	30.3	22.3	-	-	-	61.6	3.1	37.2	29.1	21.0	-	-	-
	72	61.6	2.8	44.7	37.3	29.9	22.5	-	-	58.0	3.1	43.3	35.9	28.5	21.1	-	-
	67	57.5	2.8	51.1	44.3	37.5	30.0	22.5	-	54.4	3.1	49.4	42.7	36.1	28.6	21.1	-
	62	55.2	2.8	51.1	48.1	45.1	37.3	29.9	22.3	52.6	3.1	50.0	46.8	43.7	36.0	28.5	21.0
	57	52.8	2.7	51.1	51.1	51.1	45.0	37.3	29.6	50.7	3.1	50.6	50.6	50.6	43.6	35.9	28.3
1600	77	66.6	2.8	42.0	32.1	22.3	-	-	-	62.4	3.2	41.2	31.2	21.1	-	-	-
	72	63.2	2.8	48.3	39.8	31.4	22.9	-	-	59.6	3.1	46.9	38.4	30.0	21.5	-	-
	67	59.8	2.8	54.7	47.5	40.4	31.9	23.2	-	56.8	3.1	52.6	45.7	38.9	30.3	21.8	-
	62	58.3	2.8	54.7	52.1	49.5	40.6	32.0	23.3	55.6	3.1	53.0	50.4	47.8	39.1	30.5	21.9
	57	56.7	2.7	54.7	54.7	54.7	49.7	40.9	32.0	54.3	3.1	53.4	53.4	53.4	47.9	39.2	30.5
1800	72	64.9	2.8	51.9	42.4	32.8	23.3	-	-	61.2	3.2	50.5	41.0	31.4	21.9	-	-
	67	62.2	2.8	58.2	50.8	43.4	33.7	23.9	-	59.2	3.1	55.7	48.7	41.6	32.0	22.4	-
	62	61.4	2.8	58.2	56.0	53.9	44.0	34.2	24.3	58.6	3.1	55.9	53.9	51.9	42.1	32.4	22.7
	57	60.6	2.8	58.2	58.2	58.2	54.4	44.4	34.4	58.0	3.1	56.1	56.1	56.1	52.3	42.5	32.7
2000	72	66.5	2.8	55.6	44.9	34.3	23.6	-	-	62.7	3.2	54.1	43.5	32.9	22.3	-	-
	67	64.5	2.8	61.7	54.0	46.3	35.5	24.7	-	61.6	3.1	58.8	51.6	44.4	33.7	23.1	-
	62	64.5	2.8	61.7	60.0	58.2	47.3	36.3	25.4	61.6	3.1	58.8	57.4	56.0	45.2	34.4	23.6
	57	64.5	2.8	61.8	61.8	61.8	59.1	48.0	36.9	61.6	3.1	58.8	58.8	58.8	56.6	45.7	34.9
		95°F								105°F							
1000	77	56.5	3.4	27.5	23.3	19.1	-	-	-	50.9	4.0	26.5	22.1	17.7	-	-	-
	72	51.5	3.4	34.8	29.5	24.2	18.9	-	-	47.5	4.0	33.4	28.0	22.7	17.4	-	-
	67	46.5	3.4	42.1	35.8	29.4	24.0	18.7	-	44.2	3.9	40.3	34.0	27.7	22.4	17.1	-
	62	44.2	3.4	44.2	39.3	34.5	29.1	23.6	18.2	42.7	3.9	41.8	37.3	32.8	27.4	22.1	16.7
1200	77	57.1	3.5	31.8	25.6	19.4	-	-	-	51.8	4.0	30.7	24.2	17.7	-	-	-
	72	53.0	3.4	38.4	32.0	25.7	19.3	-	-	49.0	4.0	36.7	30.3	24.0	17.7	-	-
	67	48.9	3.4	44.9	38.5	32.0	25.6	19.2	-	46.3	3.9	42.7	36.5	30.3	23.9	17.6	-
	62	47.1	3.4	45.2	42.4	38.3	31.9	25.4	18.9	45.1	3.9	43.8	40.2	36.6	30.2	23.8	17.4
	57	45.2	3.4	45.2	45.2	44.7	38.1	31.6	25.1	43.9	3.9	43.9	43.9	42.9	36.4	30.0	23.5
1400	77	57.6	3.5	36.1	27.9	19.6	-	-	-	52.6	4.0	34.9	26.3	17.8	-	-	-
	72	54.5	3.5	41.9	34.5	27.1	19.7	-	-	50.5	4.0	40.0	32.6	25.3	18.0	-	-
	67	51.4	3.4	47.7	41.2	34.7	27.2	19.8	-	48.5	4.0	45.0	39.0	32.9	25.5	18.1	-
	62	50.0	3.4	48.6	45.5	42.2	34.7	27.2	19.7	47.5	3.9	45.9	43.2	40.4	33.0	25.5	18.0
	57	48.6	3.4	48.6	48.6	48.6	42.1	34.6	27.0	46.6	3.9	46.6	46.6	46.6	40.5	32.9	25.3
1600	77	58.1	3.5	40.5	30.2	19.9	-	-	-	53.5	4.0	39.1	28.5	17.8	-	-	-
	72	56.0	3.5	45.5	37.0	28.6	20.1	-	-	52.0	4.0	43.3	34.9	26.6	18.3	-	-
	67	53.8	3.5	50.5	43.9	37.3	28.8	20.3	-	50.6	4.0	47.4	41.4	35.5	27.0	18.6	-
	62	52.9	3.5	51.2	48.6	46.0	37.5	28.9	20.4	50.0	4.0	48.0	46.1	44.3	35.7	27.2	18.6
	57	52.0	3.5	52.0	52.0	52.0	46.1	37.5	29.0	49.3	4.0	48.5	48.5	48.5	44.5	35.8	27.1
1800	72	57.4	3.5	49.0	39.5	30.0	20.5	-	-	53.5	4.0	46.6	37.3	27.9	18.6	-	-
	67	56.2	3.5	53.2	46.6	39.9	30.4	20.9	-	52.7	4.0	49.8	43.9	38.0	28.6	19.1	-
	62	55.8	3.5	53.6	51.7	49.8	40.3	30.7	21.1	52.4	4.0	50.1	49.1	48.1	38.5	28.9	19.3
	57	55.3	3.5	54.0	54.0	54.0	50.1	40.5	30.9	52.0	4.0	50.3	50.3	50.3	48.5	38.7	28.9
2000	72	58.9	3.5	52.6	42.0	31.488	20.9	-	-	55.0	4.0	49.9	39.6	29.2	18.9	-	-
	67	58.7	3.5	56.0	49.3	42.6	32.0	21.4	-	54.9	4.0	52.0	46.4	40.6	30.1	19.6	-
	62	58.7	3.5	56.0	54.8	53.7	43.1	32.5	21.8	54.8	4.0	52.0	52.0	52.0	41.3	30.6	19.9
	57	58.7	3.5	56.0	56.0	56.0	54.1	43.5	32.8	54.8	4.0	52.0	52.0	52.0	52.0	41.6	30.7

XQE05 (4 Ton) (Continued)

Air on Evaporator Coil		Temperature of Air on Condenser Coil															
		Total Capacity[1] (MBh)	Total Input (kW)[2]	Sensible Capacity (MBh) Return Dry Bulb (°F)						Total Capacity[1] (MBh)	Total Input (kW)[2]	Sensible Capacity (MBh) Return Dry Bulb (°F)					
CFM	WB (°F)			90	85	80	75	70	65			90	85	80	75	70	65
		115°F								125°F							
1000	77	45.3	4.5	25.4	20.9	16.3	-	-	-	39.6	5.1	24.4	19.6	14.9	-	-	-
	72	43.6	4.5	31.9	26.6	21.2	15.8	-	-	39.6	5.0	30.5	25.1	19.7	14.3	-	-
	67	41.9	4.5	38.4	32.3	26.1	20.8	15.5	-	39.6	5.0	36.5	30.5	24.5	19.2	13.9	-
	62	41.2	4.4	39.4	35.2	31.0	25.8	20.5	15.3	39.6	5.0	37.0	33.2	29.3	24.1	18.9	13.8
1200	77	46.4	4.5	29.5	22.8	16.1	-	-	-	41.1	5.1	28.4	21.4	14.4	-	-	-
	72	45.1	4.5	35.0	28.7	22.4	16.0	-	-	41.1	5.0	33.3	27.0	20.7	14.4	-	-
	67	43.7	4.5	40.4	34.5	28.6	22.3	15.9	-	41.1	5.0	38.1	32.5	26.9	20.6	14.3	-
	62	43.1	4.4	41.2	38.0	34.9	28.5	22.2	15.8	41.1	5.0	38.5	35.8	33.1	26.8	20.5	14.2
	57	42.5	4.4	42.0	41.6	41.1	34.8	28.4	22.0	41.1	4.9	38.9	38.9	38.9	33.1	26.7	20.4
1400	77	47.6	4.5	33.6	24.8	15.9	-	-	-	42.6	5.0	32.4	23.2	14.0	-	-	-
	72	46.6	4.5	38.0	30.8	23.5	16.2	-	-	42.6	5.0	36.1	28.9	21.7	14.5	-	-
	67	45.6	4.5	42.4	36.8	31.1	23.8	16.4	-	42.6	5.0	39.8	34.6	29.3	22.0	14.7	-
	62	45.1	4.5	43.0	40.8	38.7	31.3	23.8	16.3	42.6	5.0	40.0	38.5	37.0	29.6	22.1	14.7
	57	44.6	4.4	43.5	43.5	43.5	38.8	31.2	23.6	42.6	5.0	40.2	40.2	40.2	37.1	29.5	22.0
1600	77	48.8	4.5	37.7	26.7	15.7	-	-	-	44.1	5.0	36.4	25.0	13.6	-	-	-
	72	48.1	4.5	41.1	32.9	24.7	16.5	-	-	44.1	5.0	38.9	30.8	22.7	14.6	-	-
	67	47.4	4.5	44.4	39.0	33.6	25.2	16.8	-	44.1	5.0	41.4	36.6	31.8	23.4	15.1	-
	62	47.0	4.5	44.7	43.7	42.6	34.0	25.4	16.9	44.1	5.0	41.5	41.2	40.9	32.3	23.7	15.1
	57	46.7	4.5	45.1	45.1	45.1	42.8	34.0	25.3	44.1	5.0	41.6	41.6	41.6	41.1	32.3	23.5
1800	72	49.6	4.5	44.1	35.0	25.8	16.7	-	-	45.7	5.0	41.7	32.7	23.7	14.7	-	-
	67	49.2	4.5	46.4	41.3	36.1	26.7	17.3	-	45.7	5.0	43.0	38.6	34.2	24.9	15.5	-
	62	49.0	4.5	46.5	46.5	46.4	36.8	27.1	17.4	45.6	5.0	43.0	43.0	43.0	35.0	25.3	15.6
	57	48.8	4.5	46.6	46.6	46.6	46.6	36.9	27.0	45.5	5.0	43.0	43.0	43.0	43.0	35.1	25.0
2000	72	51.1	4.5	47.2	37.1	27.0	16.9	-	-	47.3	5.0	44.5	34.6	24.7	14.8	-	-
	67	51.1	4.5	48.3	43.5	38.6	28.2	17.8	-	47.3	5.0	44.6	40.6	36.6	26.3	15.9	-
	62	51.0	4.5	48.3	48.3	48.3	39.5	28.7	18.0	47.1	5.0	44.7	44.7	44.7	37.7	26.9	16.0
	57	50.9	4.5	48.3	48.3	48.3	48.3	39.7	28.6	47.0	5.0	44.7	44.7	44.7	44.7	37.8	26.5

1. These capacities are gross ratings. For net capacity, deduct the supply air blower motor heat (MBh = 3.415 x kW). Refer to the appropriate Blower Performance Table for the kW of the supply air blower motor.
2. These ratings include the condenser fan motors (total 1 kW) and the compressor motors but not the supply air blower motor.

XQE06 (5 Ton)

Air on Evaporator Coil		Temperature of Air on Condenser Coil															
		Total Capacity[1] (MBh)	Total Input (kW)[2]	Sensible Capacity (MBh) Return Dry Bulb (°F)						Total Capacity[1] (MBh)	Total Input (kW)[2]	Sensible Capacity (MBh) Return Dry Bulb (°F)					
CFM	WB (°F)			90	85	80	75	70	65			90	85	80	75	70	65
		75°F								85°F							
1250	77	78.3	3.6	38.6	34.0	29.5	-	-	-	73.5	3.9	36.7	31.6	26.5	-	-	-
	72	70.9	3.5	46.7	40.5	34.3	28.1	-	-	66.9	3.9	44.9	38.5	32.0	25.5	-	-
	67	63.6	3.4	54.8	46.9	39.0	33.5	27.2	-	60.2	3.8	53.2	45.3	37.5	31.4	25.0	-
	62	59.0	3.4	54.3	49.0	43.8	36.5	32.6	27.1	58.0	3.8	54.8	48.9	43.0	36.1	30.9	24.9
1500	77	79.4	3.5	43.4	36.3	29.3	-	-	-	74.3	3.9	41.7	34.1	26.5	-	-	-
	72	73.0	3.5	51.2	43.6	36.0	28.4	-	-	68.7	3.9	49.4	41.6	33.7	25.9	-	-
	67	66.6	3.4	59.0	50.9	42.7	35.6	27.7	-	63.0	3.8	57.1	49.1	41.0	33.4	25.5	-
	62	62.8	3.4	59.0	54.2	49.5	40.7	34.7	27.2	61.1	3.8	58.6	53.5	48.3	39.9	32.9	25.2
	57	59.0	3.3	59.0	57.6	56.2	48.9	41.6	34.3	59.3	3.9	59.3	57.9	55.6	47.9	40.3	32.6
1750	77	80.6	3.5	48.1	38.6	29.0	-	-	-	75.1	3.9	46.8	36.6	26.4	-	-	-
	72	75.1	3.5	55.7	46.7	37.7	28.8	-	-	70.5	3.9	53.9	44.7	35.5	26.3	-	-
	67	69.5	3.4	63.2	54.8	46.5	37.6	28.2	-	65.8	3.9	61.1	52.8	44.6	35.4	25.9	-
	62	66.6	3.4	63.7	59.5	55.2	44.9	36.7	27.4	64.3	3.9	62.4	58.0	53.7	43.7	34.8	25.4
	57	63.7	3.4	63.6	63.0	62.3	54.5	45.1	35.7	62.8	3.9	62.8	62.7	61.9	53.2	43.7	34.2
2000	77	81.8	3.5	52.9	40.8	28.8	-	-	-	75.9	3.9	51.8	39.1	26.4	-	-	-
	72	77.1	3.5	60.2	49.8	39.5	29.1	-	-	72.3	3.9	58.4	47.8	37.2	26.6	-	-
	67	72.5	3.5	67.4	58.8	50.2	39.6	28.7	-	68.7	3.9	65.1	56.6	48.1	37.3	26.4	-
	62	70.4	3.4	68.5	64.7	60.9	49.1	38.7	27.6	67.5	3.9	66.2	62.6	59.0	47.5	36.8	25.6
	57	68.3	3.4	68.3	68.3	68.3	60.2	48.7	37.2	66.4	3.9	66.4	66.4	66.4	58.5	47.1	35.7
2250	72	79.2	3.5	64.7	52.9	41.2	29.5	-	-	74.1	3.9	62.9	51.0	39.0	27.0	-	-
	67	75.5	3.5	71.7	62.8	53.9	41.7	29.2	-	71.5	3.9	69.0	60.3	51.7	39.3	26.9	-
	62	74.2	3.5	73.2	69.9	66.6	53.3	40.7	27.8	70.7	3.9	70.1	67.2	64.3	51.4	38.7	25.9
	57	72.9	3.5	72.9	72.9	72.9	65.8	52.2	38.7	69.9	3.9	69.9	69.9	69.9	63.8	50.5	37.3
2500	72	81.3	3.5	69.2	56.1	43.0	29.8	-	-	75.9	3.9	67.5	54.1	40.8	27.4	-	-
	67	78.5	3.5	75.9	66.7	57.6	43.7	29.7	-	74.3	3.9	73.0	64.1	55.2	41.3	27.4	-
	62	78.0	3.5	78.0	75.2	72.3	57.5	42.8	28.0	73.9	3.9	73.9	71.8	69.7	55.2	40.7	26.1
	57	77.5	3.5	77.5	77.5	77.5	71.4	55.8	40.2	73.4	3.9	73.4	73.4	73.4	69.1	53.9	38.8
		95°F								105°F							
1250	77	68.8	4.3	34.8	29.2	23.5	-	-	-	63.2	4.9	34.2	28.0	21.9	-	-	-
	72	62.8	4.3	43.2	36.4	29.7	23.0	-	-	58.3	4.9	41.6	34.8	28.0	21.2	-	-
	67	56.8	4.2	51.6	43.7	35.9	29.3	22.7	-	53.3	4.8	49.0	41.5	34.1	27.4	20.8	-
	62	56.9	4.3	55.4	48.8	42.1	35.7	29.2	22.8	53.3	4.9	52.2	46.2	40.1	33.7	27.2	20.7
1500	77	69.3	4.3	40.1	31.9	23.7	-	-	-	63.7	4.9	38.9	30.2	21.5	-	-	-
	72	64.4	4.3	47.7	39.6	31.5	23.4	-	-	59.7	4.9	45.6	37.5	29.4	21.4	-	-
	67	59.5	4.2	55.3	47.3	39.3	31.2	23.2	-	55.7	4.9	52.2	44.8	37.3	29.2	21.2	-
	62	59.5	4.3	58.3	52.7	47.1	39.1	31.1	23.1	55.7	4.9	54.8	50.0	45.2	37.1	29.0	20.9
	57	59.5	4.4	59.5	58.1	54.9	47.0	39.0	31.0	55.7	5.0	55.7	55.2	53.1	45.0	36.9	28.8
1750	77	69.7	4.3	45.4	34.6	23.8	-	-	-	64.2	4.9	43.7	32.4	21.2	-	-	-
	72	65.9	4.3	52.2	42.7	33.2	23.8	-	-	61.1	4.9	49.6	40.2	30.9	21.5	-	-
	67	62.1	4.3	59.0	50.8	42.7	33.1	23.6	-	58.0	4.9	55.5	48.0	40.6	31.0	21.5	-
	62	62.0	4.3	61.1	56.6	52.1	42.5	32.9	23.4	58.0	4.9	57.4	53.8	50.3	40.6	30.9	21.1
	57	62.0	4.4	62.0	62.0	61.5	51.9	42.3	32.6	57.9	5.0	57.9	57.9	57.9	50.1	40.2	30.3
2000	77	70.1	4.3	50.8	37.4	24.0	-	-	-	64.7	4.9	48.5	34.7	20.8	-	-	-
	72	67.4	4.3	56.7	45.9	35.0	24.2	-	-	62.6	4.9	53.6	43.0	32.3	21.7	-	-
	67	64.8	4.3	62.7	54.4	46.1	35.1	24.1	-	60.4	4.9	58.7	51.3	43.8	32.9	21.9	-
	62	64.6	4.3	64.0	60.5	57.1	46.0	34.8	23.7	60.3	4.9	59.9	57.6	55.3	44.0	32.7	21.4
	57	64.4	4.4	64.4	64.4	64.4	56.8	45.5	34.3	60.2	5.0	60.2	60.2	60.2	55.2	43.5	31.8
2250	72	69.0	4.3	61.2	49.0	36.8	24.6	-	-	64.0	4.9	57.6	45.7	33.8	21.9	-	-
	67	67.4	4.3	66.4	57.9	49.4	37.0	24.5	-	62.8	4.9	62.0	54.5	47.1	34.7	22.2	-
	62	67.2	4.3	66.9	64.5	62.1	49.4	36.7	24.0	62.6	5.0	62.5	61.5	60.4	47.5	34.5	21.6
	57	66.9	4.4	66.9	66.9	66.9	61.8	48.8	35.9	62.4	5.0	62.4	62.4	62.4	60.3	46.8	33.4
2500	72	70.5	4.4	65.7	52.1	38.6	25.0	-	-	65.5	5.0	61.6	48.4	35.2	22.0	-	-
	67	70.1	4.4	70.1	61.5	52.8	38.9	25.0	-	65.2	5.0	65.2	57.8	50.4	36.5	22.6	-
	62	69.7	4.4	69.7	68.4	67.1	52.8	38.5	24.3	64.9	5.0	64.9	64.9	64.9	50.9	36.4	21.8
	57	69.4	4.3	69.4	69.4	69.4	66.7	52.1	37.5	64.7	5.0	64.7	64.7	64.7	64.7	50.1	34.9

XQE06 (5 Ton) (Continued)

Air on Evaporator Coil		Temperature of Air on Condenser Coil															
		Total Capacity[1] (MBh)	Total Input (kW)[2]	Sensible Capacity (MBh) Return Dry Bulb (°F)						Total Capacity[1] (MBh)	Total Input (kW)[2]	Sensible Capacity (MBh) Return Dry Bulb (°F)					
CFM	WB (°F)			90	85	80	75	70	65			90	85	80	75	70	65
		115°F								125°F							
1250	77	57.6	5.5	33.5	26.9	20.3	-	-	-	52.0	6.1	32.8	25.8	18.7	-	-	-
	72	53.7	5.5	39.9	33.1	26.3	19.4	-	-	49.1	6.1	38.3	31.4	24.5	17.6	-	-
	67	49.7	5.5	46.4	39.3	32.2	25.5	18.8	-	46.2	6.1	43.8	37.1	30.3	23.6	16.9	-
	62	49.8	5.5	49.1	43.6	38.2	31.6	25.1	18.6	46.2	6.1	45.9	41.1	36.2	29.6	23.1	16.5
1500	77	58.2	5.5	37.7	28.6	19.4	-	-	-	52.7	6.1	36.5	26.9	17.3	-	-	-
	72	55.0	5.5	43.5	35.4	27.4	19.4	-	-	50.3	6.1	41.3	33.3	25.3	17.3	-	-
	67	51.8	5.5	49.2	42.3	35.3	27.2	19.1	-	48.0	6.1	46.2	39.8	33.4	25.2	17.1	-
	62	51.8	5.5	51.3	47.3	43.3	35.1	26.9	18.8	48.0	6.1	47.9	44.6	41.4	33.1	24.9	16.6
	57	51.8	5.6	51.8	51.8	51.3	43.0	34.8	26.5	48.0	6.2	48.0	48.0	48.0	41.0	32.6	24.2
1750	77	58.8	5.5	42.0	30.3	18.6	-	-	-	53.3	6.1	40.2	28.1	15.9	-	-	-
	72	56.4	5.5	47.0	37.7	28.5	19.3	-	-	51.6	6.1	44.4	35.3	26.2	17.1	-	-
	67	54.0	5.5	52.0	45.2	38.5	28.9	19.4	-	49.9	6.1	48.5	42.4	36.4	26.8	17.3	-
	62	53.9	5.5	53.6	51.0	48.5	38.6	28.8	18.9	49.9	6.1	49.8	48.2	46.6	36.6	26.7	16.7
	57	53.9	5.6	53.9	53.9	53.9	48.3	38.1	27.9	49.9	6.2	49.9	49.9	49.9	46.4	36.0	25.6
2000	77	59.4	5.5	46.2	31.9	17.7	-	-	-	54.0	6.1	43.9	29.2	14.5	-	-	-
	72	57.7	5.5	50.5	40.1	29.7	19.2	-	-	52.9	6.1	47.4	37.2	27.0	16.8	-	-
	67	56.1	5.5	54.8	48.2	41.6	30.7	19.7	-	51.7	6.1	50.8	45.1	39.4	28.5	17.5	-
	62	56.0	5.6	55.9	54.7	53.6	42.1	30.6	19.1	51.7	6.2	51.7	51.7	51.7	40.2	28.5	16.8
	57	55.9	5.6	55.9	55.9	55.9	53.5	41.5	29.4	51.7	6.2	51.7	51.7	51.7	51.7	39.4	27.0
2250	72	59.1	5.6	54.0	42.4	30.8	19.2	-	-	54.1	6.2	50.4	39.1	27.8	16.5	-	-
	67	58.2	5.6	57.6	51.2	44.8	32.4	20.0	-	53.5	6.2	53.2	47.8	42.4	30.1	17.7	-
	62	58.1	5.6	58.1	58.1	58.1	45.6	32.4	19.2	53.5	6.2	53.5	53.5	53.5	43.7	30.2	16.8
	57	58.0	5.6	58.0	58.0	58.0	58.0	44.8	30.8	53.5	6.2	53.5	53.5	53.5	53.5	42.8	28.3
2500	72	60.4	5.6	57.5	44.7	31.9	19.1	-	-	55.4	6.2	53.4	41.0	28.6	16.2	-	-
	67	60.3	5.6	60.3	54.1	47.9	34.1	20.3	-	55.4	6.2	55.4	50.5	45.5	31.7	17.9	-
	62	60.2	5.6	60.2	60.2	60.2	49.1	34.2	19.4	55.4	6.2	55.4	55.4	55.4	47.2	32.0	16.9
	57	60.0	5.6	60.0	60.0	60.0	60.0	48.1	32.3	55.4	6.2	55.4	55.4	55.4	55.4	46.2	29.7

1. These capacities are gross ratings. For net capacity, deduct the supply air blower motor heat (MBh = 3.415 x kW). Refer to the appropriate Blower Performance Table for the kW of the supply air blower motor.
2. These ratings include the condenser fan motors (total 1 kW) and the compressor motors but not the supply air blower motor.

XYE04-09, XXEA7-12, XQE04-06 Heating Capacities

XYE04 Heating Capacities

Size (Tons)	Model	Air Over Evaporator Coil		Capacity & kw	Outdoor Temperature (ºF @ 72% RH)							
		CFM	DB		-10	0	10	20	30	40	50	60
04 (3)	XYE	900	55	MBH	2.5	8.1	13.7	19.3	24.8	30.4	36.0	41.6
				kW	2.2	2.3	2.4	2.6	2.7	2.9	3.0	3.1
			70	MBH	2.5	7.9	13.3	18.7	24.0	29.4	34.8	40.2
				kW	2.7	2.8	3.0	3.1	3.3	3.4	3.5	3.7
			80	MBH	2.5	7.8	13.0	18.3	23.5	28.7	34.0	39.2
				kW	3.0	3.2	3.4	3.6	3.7	3.9	4.1	4.3
		1200	55	MBH	3.1	8.7	14.4	20.0	25.6	31.2	36.8	42.4
				kW	2.3	2.4	2.4	2.5	2.6	2.6	2.7	2.8
			70	MBH	3.0	8.4	13.8	19.3	24.7	30.1	35.5	40.9
				kW	2.4	2.5	2.7	2.8	2.9	3.0	3.1	3.2
			80	MBH	2.5	7.8	13.2	18.5	23.8	29.2	34.5	39.9
				kW	2.8	2.9	3.0	3.1	3.3	3.4	3.5	3.6
		1500	55	MBH	4.2	9.7	15.3	20.9	26.4	32.0	37.6	43.1
				kW	2.1	2.2	2.3	2.4	2.4	2.5	2.6	2.7
			70	MBH	3.5	9.0	14.4	19.8	25.2	30.6	36.1	41.5
				kW	2.4	2.5	2.6	2.7	2.8	2.9	3.0	3.1
			80	MBH	2.5	7.9	13.3	18.7	24.1	29.5	34.9	40.3
				kW	2.8	2.9	3.0	3.1	3.2	3.3	3.4	3.5

XYE05 Heating Capacities

Size (Tons)	Model	Air Over Evaporator Coil		Capacity & kw	Outdoor Temperature (ºF @ 72% RH)							
		CFM	DB		-10	0	10	20	30	40	50	60
05 (4)	XYE	1200	55	MBH	5.1	12.6	20.0	27.5	35.0	42.4	49.9	57.4
				kW	2.5	2.7	2.9	3.1	3.3	3.5	3.6	3.8
			70	MBH	5.5	12.5	19.5	26.5	33.5	40.5	47.5	54.5
				kW	2.9	3.1	3.3	3.5	3.7	4.0	4.2	4.4
			80	MBH	4.4	11.4	18.4	25.4	32.5	39.5	46.5	53.5
				kW	3.2	3.4	3.7	3.9	4.1	4.3	4.6	4.8
		1600	55	MBH	4.0	12.0	20.0	28.0	36.0	44.0	52.0	60.0
				kW	2.4	2.6	2.8	2.9	3.1	3.3	3.4	3.6
			70	MBH	4.3	11.8	19.4	26.9	34.4	42.0	49.5	57.1
				kW	2.9	3.0	3.2	3.4	3.6	3.8	3.9	4.1
			80	MBH	4.0	11.3	18.5	25.8	33.1	40.4	47.7	55.0
				kW	3.1	3.3	3.5	3.7	3.9	4.1	4.3	4.5
		2000	55	MBH	4.4	12.4	20.4	28.4	36.4	44.3	52.3	60.3
				kW	3.0	3.1	3.2	3.3	3.4	3.5	3.6	3.7
			70	MBH	4.9	12.4	19.9	27.4	34.9	42.4	49.9	57.4
				kW	3.4	3.5	3.6	3.8	3.9	4.0	4.1	4.2
			80	MBH	4.5	11.8	19.0	26.3	33.5	40.8	48.0	55.3
				kW	3.7	3.8	3.9	4.0	4.2	4.3	4.4	4.6

XYE06 Heating Capacities

Size (Tons)	Model	Air Over Evaporator Coil		Capacity & kw	Outdoor Temperature (ºF @ 72% RH)							
		CFM	DB		-10	0	10	20	30	40	50	60
06 (5)	XYE	1500	55	MBH	6.5	15.6	24.7	33.7	42.8	51.9	61.0	70.1
				kW	3.6	3.7	3.8	3.9	4.0	4.2	4.3	4.4
			70	MBH	4.6	13.5	22.5	31.5	40.5	49.4	58.4	67.4
				kW	4.0	4.1	4.3	4.4	4.6	4.7	4.9	5.0
			80	MBH	3.4	12.2	21.0	29.9	38.7	47.5	56.3	65.2
				kW	4.3	4.5	4.6	4.8	5.0	5.1	5.3	5.5
		2000	55	MBH	5.3	14.5	23.8	33.0	42.3	51.6	60.8	70.1
				kW	3.5	3.6	3.7	3.9	4.0	4.1	4.3	4.4
			70	MBH	4.2	13.3	22.3	31.3	40.3	49.4	58.4	67.4
				kW	3.8	4.0	4.2	4.4	4.5	4.7	4.9	5.1
			80	MBH	2.9	11.8	20.8	29.7	38.6	47.6	56.5	65.5
				kW	4.2	4.4	4.5	4.7	4.9	5.1	5.3	5.5
		2500	55	MBH	4.1	13.5	22.9	32.4	41.8	51.3	60.7	70.2
				kW	4.1	4.2	4.3	4.4	4.5	4.6	4.7	4.8
			70	MBH	3.1	12.3	21.5	30.7	39.9	49.1	58.3	67.5
				kW	4.3	4.5	4.6	4.7	4.9	5.0	5.2	5.3
			80	MBH	2.2	11.2	20.3	29.3	38.4	47.4	56.5	65.5
				kW	4.7	4.8	5.0	5.1	5.3	5.4	5.6	5.7

XYE07 Heating Capacities

Size (Tons)	Model	Airflow CFM	Indoor Temp	Capacity & kw	OUTDOOR TEMPERATURE (ºF) (72% RH)							
					-10	0	10	20	30	40	50	60
07 (6)	XYE	1800	55	MBH	20.3	29.4	38.5	47.6	56.6	65.7	74.8	83.9
				kW	4.37	4.62	4.86	5.11	5.36	5.60	5.85	6.10
			70	MBH	17.0	26.0	35.1	44.2	53.3	62.3	71.4	80.5
				kW	5.00	5.25	5.50	5.74	5.99	6.24	6.49	6.73
			80	MBH	14.3	23.3	32.4	41.5	50.6	59.6	68.7	77.8
				kW	5.49	5.74	5.99	6.23	6.48	6.73	6.97	7.22
		2400	55	MBH	19.7	28.8	37.9	47.0	56.0	65.1	74.2	83.3
				kW	3.28	3.53	3.77	4.02	4.27	4.52	4.76	5.01
			70	MBH	16.4	25.4	34.5	43.6	52.7	61.7	70.8	79.9
				kW	3.91	4.16	4.41	4.65	4.90	5.15	5.39	5.64
			80	MBH	13.7	22.7	31.8	40.9	50.0	59.0	68.1	77.2
				kW	4.40	4.64	4.89	5.14	5.39	5.63	5.88	6.13
		3000	55	MBH	20.2	29.2	38.3	47.4	56.5	65.5	74.6	83.7
				kW	3.03	3.28	3.52	3.77	4.02	4.27	4.51	4.76
			70	MBH	16.8	25.9	34.9	44.0	53.1	62.2	71.3	80.3
				kW	3.66	3.91	4.16	4.41	4.65	4.90	5.15	5.39
			80	MBH	14.1	23.2	32.3	41.3	50.4	59.5	68.6	77.6
				kW	4.15	4.40	4.65	4.89	5.14	5.39	5.64	5.88

XYEA7 Heating Capacities

Size (Tons)	Model	Airflow CFM	Indoor Temp	Capacity & kw	OUTDOOR TEMPERATURE (ºF) (72% RH)							
					-10	0	10	20	30	40	50	60
A7 (6)	XYE	1800	55	MBH	15.4	24.1	32.7	41.3	50.0	58.6	67.2	75.9
				kW	3.34	3.58	3.81	4.05	4.28	4.52	4.75	4.99
			70	MBH	12.7	21.3	30.0	38.6	47.2	55.9	64.5	73.1
				kW	4.02	4.25	4.49	4.72	4.96	5.19	5.43	5.66
			80	MBH	9.8	18.4	27.0	35.7	44.3	52.9	61.6	70.2
				kW	4.51	4.74	4.98	5.21	5.45	5.68	5.92	6.15
		2400	55	MBH	16.8	25.5	34.1	42.7	51.4	60.0	68.6	77.3
				kW	2.97	3.21	3.44	3.68	3.91	4.15	4.38	4.62
			70	MBH	14.1	22.7	31.3	40.0	48.6	57.2	65.9	74.5
				kW	3.65	3.88	4.12	4.35	4.59	4.82	5.06	5.29
			80	MBH	11.1	19.8	28.4	37.0	45.7	54.3	62.9	71.6
				kW	4.13	4.37	4.60	4.84	5.07	5.31	5.54	5.78
		3000	55	MBH	17.2	25.8	34.5	43.1	51.7	60.4	69.0	77.6
				kW	2.72	2.96	3.19	3.43	3.66	3.90	4.13	4.37
			70	MBH	14.4	23.1	31.7	40.3	49.0	57.6	66.2	74.9
				kW	3.40	3.63	3.87	4.10	4.34	4.57	4.81	5.04
			80	MBH	11.5	20.2	28.8	37.4	46.0	54.7	63.3	71.9
				kW	3.89	4.12	4.36	4.59	4.83	5.06	5.30	5.53

XYE08 Heating Capacities

Size (Tons)	Model	Airflow CFM	Indoor Temp	Capacity & kw	OUTDOOR TEMPERATURE (ºF) (72% RH)							
					-10	0	10	20	30	40	50	60
08 (7.5)	XYE	2250	55	MBH	20.5	31.9	43.3	54.7	66.2	77.6	89.0	100.5
				kW	4.26	4.56	4.87	5.18	5.49	5.79	6.10	6.41
			70	MBH	16.9	28.4	39.8	51.2	62.7	74.1	85.5	97.0
				kW	4.98	5.29	5.59	5.90	6.21	6.51	6.82	7.13
			80	MBH	15.7	27.2	38.6	50.0	61.5	72.9	84.3	95.8
				kW	5.74	6.05	6.36	6.67	6.97	7.28	7.59	7.89
		3000	55	MBH	20.6	32.1	43.5	54.9	66.4	77.8	89.2	100.7
				kW	3.82	4.12	4.43	4.74	5.05	5.35	5.66	5.97
			70	MBH	17.1	28.6	40.0	51.4	62.9	74.3	85.7	97.2
				kW	4.54	4.85	5.15	5.46	5.77	6.08	6.38	6.69
			80	MBH	15.9	27.3	38.8	50.2	61.6	73.1	84.5	95.9
				kW	5.30	5.61	5.92	6.22	6.53	6.84	7.15	7.45
		3750	55	MBH	21.9	33.3	44.8	56.2	67.6	79.0	90.5	101.9
				kW	3.57	3.88	4.18	4.49	4.80	5.11	5.41	5.72
			70	MBH	18.4	29.8	41.2	52.7	64.1	75.5	87.0	98.4
				kW	4.29	4.60	4.91	5.21	5.52	5.83	6.13	6.44
			80	MBH	17.2	28.6	40.0	51.5	62.9	74.3	85.8	97.2
				kW	5.06	5.36	5.67	5.98	6.29	6.59	6.90	7.21

XYE09 Heating Capacities

Size (Tons)	Model	Airflow CFM	Indoor Temp	Capacity & kw	OUTDOOR TEMPERATURE (ºF) (72% RH)							
					-10	0	10	20	30	40	50	60
09 (8.5)	XYE	2550	55	MBH	20.6	34.0	47.5	61.0	74.4	87.9	101.4	114.8
				kW	4.30	4.70	5.10	5.50	5.90	6.30	6.70	7.10
			70	MBH	15.1	28.6	42.0	55.5	69.0	82.4	95.9	109.4
				kW	5.32	5.72	6.12	6.52	6.92	7.32	7.72	8.12
			80	MBH	12.1	25.6	39.1	52.5	66.0	79.5	92.9	106.4
				kW	6.19	6.59	6.99	7.39	7.79	8.19	8.59	8.99
		3400	55	MBH	22.4	35.8	49.3	62.8	76.2	89.7	103.2	116.6
				kW	3.63	4.03	4.43	4.82	5.22	5.62	6.02	6.42
			70	MBH	17.0	30.4	43.9	57.4	70.8	84.3	97.8	111.2
				kW	4.66	5.06	5.46	5.85	6.25	6.65	7.05	7.45
			80	MBH	13.9	27.4	40.9	54.3	67.8	81.3	94.7	108.2
				kW	5.52	5.92	6.32	6.71	7.11	7.51	7.91	8.31
		4250	55	MBH	22.7	36.2	49.7	63.1	76.6	90.1	103.5	117.0
				kW	3.25	3.65	4.05	4.44	4.84	5.24	5.64	6.04
			70	MBH	17.3	30.7	44.2	57.7	71.1	84.6	98.1	111.5
				kW	4.27	4.67	5.07	5.47	5.87	6.27	6.67	7.06
			80	MBH	14.3	27.8	41.2	54.7	68.2	81.6	95.1	108.6
				kW	5.14	5.54	5.94	6.34	6.74	7.13	7.53	7.93

XXEA7 Heating Capacities

Size (Tons)	Model	Airflow CFM	Indoor Temp	Capacity & kw	OUTDOOR TEMPERATURE (ºF) (72% RH)							
					-10	0	10	20	30	40	50	60
A7 (6)	XXE	1800	55	MBH	10.7	20.9	31.0	41.1	51.3	61.4	71.5	81.7
				kW	3.28	3.50	3.72	3.94	4.16	4.38	4.60	4.83
			70	MBH	7.3	17.5	27.6	37.7	47.9	58.0	68.2	78.3
				kW	3.87	4.09	4.32	4.54	4.76	4.98	5.20	5.42
			80	MBH	4.7	14.9	25.0	35.1	45.3	55.4	65.6	75.7
				kW	4.38	4.60	4.82	5.04	5.26	5.48	5.70	5.93
		2400	55	MBH	10.6	20.8	30.9	41.0	51.2	61.3	71.4	81.6
				kW	2.75	2.97	3.20	3.42	3.64	3.86	4.08	4.30
			70	MBH	7.3	17.5	27.6	37.7	47.9	58.0	68.1	78.3
				kW	3.38	3.60	3.82	4.04	4.27	4.49	4.71	4.93
			80	MBH	4.7	14.8	24.9	35.1	45.2	55.4	65.5	75.6
				kW	3.87	4.09	4.31	4.53	4.75	4.97	5.19	5.42
		3000	55	MBH	10.5	20.6	30.8	40.9	51.0	61.2	71.3	81.4
				kW	2.60	2.82	3.04	3.26	3.48	3.70	3.92	4.15
			70	MBH	7.1	17.2	27.4	37.5	47.6	57.8	67.9	78.0
				kW	3.19	3.41	3.64	3.86	4.08	4.30	4.52	4.74
			80	MBH	4.5	14.6	24.8	34.9	45.0	55.2	65.3	75.4
				kW	3.70	3.92	4.14	4.36	4.58	4.80	5.02	5.25

XXE08 Heating Capacities

Size (Tons)	Model	Airflow CFM	Indoor Temp	Capacity & kw	OUTDOOR TEMPERATURE (ºF) (72% RH)							
					-10	0	10	20	30	40	50	60
08 (7.5)	XXE	2250	55	MBH	16.0	27.6	39.3	51.0	62.6	74.3	86.0	97.6
				kW	4.65	4.85	5.05	5.25	5.45	5.66	5.86	6.06
			70	MBH	11.3	23.0	34.6	46.3	58.0	69.6	81.3	92.9
				kW	5.60	5.80	6.00	6.20	6.41	6.61	6.81	7.01
			80	MBH	7.2	18.9	30.5	42.2	53.8	65.5	77.2	88.8
				kW	6.34	6.54	6.74	6.95	7.15	7.35	7.55	7.75
		3000	55	MBH	19.3	31.0	42.6	54.3	66.0	77.6	89.3	100.9
				kW	4.08	4.28	4.48	4.68	4.89	5.09	5.29	5.49
			70	MBH	14.6	26.3	38.0	49.6	61.3	73.0	84.6	96.3
				kW	5.03	5.23	5.44	5.64	5.84	6.04	6.24	6.44
			80	MBH	10.5	22.2	33.8	45.5	57.2	68.8	80.5	92.1
				kW	5.77	5.97	6.17	6.37	6.58	6.78	6.98	7.18
		3750	55	MBH	19.7	31.4	43.0	54.7	66.3	78.0	89.7	101.3
				kW	3.77	3.97	4.17	4.37	4.58	4.78	4.98	5.18
			70	MBH	15.0	26.7	38.4	50.0	61.7	73.3	85.0	96.7
				kW	4.72	4.92	5.13	5.33	5.53	5.73	5.93	6.13
			80	MBH	10.9	22.6	34.2	45.9	57.6	69.2	80.9	92.5
				kW	5.46	5.66	5.87	6.07	6.27	6.47	6.67	6.87

XXE09 Heating Capacities

Size (Tons)	Model	Airflow CFM	Indoor Temp	Capacity & kw	OUTDOOR TEMPERATURE (ºF) (72% RH)							
					-10	0	10	20	30	40	50	60
09 (8.5)	XXE	2550	55	MBH	17.0	29.9	42.8	55.7	68.7	81.6	94.5	107.4
				kW	5.83	6.07	6.30	6.54	6.78	7.02	7.25	7.49
			70	MBH	14.1	27.0	39.9	52.8	65.7	78.7	91.6	104.5
				kW	7.06	7.30	7.54	7.78	8.01	8.25	8.49	8.73
			80	MBH	8.8	21.7	34.6	47.5	60.5	73.4	86.3	99.2
				kW	7.88	8.12	8.35	8.59	8.83	9.07	9.30	9.54
		3400	55	MBH	22.2	35.2	48.1	61.0	73.9	86.8	99.7	112.7
				kW	4.58	4.82	5.06	5.30	5.53	5.77	6.01	6.25
			70	MBH	19.2	32.1	45.0	57.9	70.9	83.8	96.7	109.6
				kW	5.79	6.02	6.26	6.50	6.74	6.97	7.21	7.45
			80	MBH	13.9	26.9	39.8	52.7	65.6	78.5	91.5	104.4
				kW	6.61	6.85	7.09	7.32	7.56	7.80	8.04	8.27
		4250	55	MBH	22.1	35.0	48.0	60.9	73.8	86.7	99.6	112.6
				kW	4.08	4.31	4.55	4.79	5.03	5.26	5.50	5.74
			70	MBH	19.2	32.1	45.0	58.0	70.9	83.8	96.7	109.6
				kW	5.31	5.55	5.79	6.02	6.26	6.50	6.74	6.97
			80	MBH	13.9	26.8	39.8	52.7	65.6	78.5	91.4	104.4
				kW	6.13	6.37	6.60	6.84	7.08	7.31	7.55	7.79

XXE12 Heating Capacities

Size (Tons)	Model	Airflow CFM	Indoor Temp	Capacity & kw	OUTDOOR TEMPERATURE (ºF) (72% RH)							
					-10	0	10	20	30	40	50	60
12 (10)	XXE	3000	55	MBH	19.3	34.9	50.4	65.9	81.4	97.0	112.5	128.0
				kW	5.01	5.53	6.04	6.56	7.07	7.58	8.10	8.61
			70	MBH	15.1	30.6	46.1	61.6	77.2	92.7	108.2	123.8
				kW	6.16	6.68	7.19	7.71	8.22	8.73	9.25	9.76
			80	MBH	15.6	31.2	46.7	62.2	77.7	93.3	108.8	124.3
				kW	7.11	7.63	8.14	8.66	9.17	9.68	10.20	10.71
		4000	55	MBH	20.4	35.9	51.5	67.0	82.5	98.1	113.6	129.1
				kW	4.27	4.79	5.30	5.82	6.33	6.84	7.36	7.87
			70	MBH	16.2	31.7	47.2	62.8	78.3	93.8	109.3	124.9
				kW	5.43	5.95	6.46	6.98	7.49	8.00	8.52	9.03
			80	MBH	16.8	32.3	47.8	63.4	78.9	94.4	109.9	125.5
				kW	6.39	6.91	7.42	7.94	8.45	8.96	9.48	9.99
		5000	55	MBH	22.4	38.0	53.5	69.0	84.5	100.1	115.6	131.1
				kW	3.81	4.33	4.84	5.36	5.87	6.38	6.90	7.41
			70	MBH	18.2	33.7	49.2	64.7	80.3	95.8	111.3	126.8
				kW	4.96	5.48	5.99	6.51	7.02	7.53	8.05	8.56
			80	MBH	18.7	34.3	49.8	65.3	80.8	96.4	111.9	127.4
				kW	5.91	6.43	6.94	7.46	7.97	8.48	9.00	9.51

XQE04 Heating Capacities

Size (Tons)	Model	Airflow CFM	Indoor Temp	Capacity & kw	OUTDOOR TEMPERATURE (ºF) (72% RH)							
					-10	0	10	20	30	40	50	60
04 (3)	XQE	900	55	MBH	5.9	11.2	16.5	21.8	27.1	32.4	37.7	43.0
				kW	1.93	2.05	2.18	2.30	2.43	2.56	2.68	2.81
			70	MBH	4.0	9.3	14.6	19.9	25.2	30.5	35.8	41.1
				kW	2.38	2.50	2.63	2.75	2.88	3.01	3.13	3.26
			80	MBH	3.0	8.3	13.6	18.9	24.2	29.5	34.8	40.1
				kW	2.78	2.91	3.04	3.16	3.29	3.41	3.54	3.67
		1200	55	MBH	5.8	11.1	16.4	21.7	27.0	32.3	37.6	42.9
				kW	1.62	1.74	1.87	2.00	2.12	2.25	2.37	2.50
			70	MBH	3.9	9.2	14.5	19.8	25.1	30.4	35.7	41.0
				kW	2.06	2.19	2.31	2.44	2.57	2.69	2.82	2.94
			80	MBH	2.8	8.1	13.4	18.7	24.0	29.3	34.6	39.9
				kW	2.47	2.59	2.72	2.85	2.97	3.10	3.22	3.35
		1500	55	MBH	6.5	11.8	17.1	22.4	27.7	33.0	38.3	43.6
				kW	1.49	1.62	1.74	1.87	2.00	2.12	2.25	2.37
			70	MBH	4.6	9.9	15.2	20.5	25.8	31.2	36.5	41.8
				kW	1.94	2.07	2.19	2.32	2.45	2.57	2.70	2.82
			80	MBH	3.6	8.9	14.2	19.5	24.8	30.1	35.4	40.7
				kW	2.35	2.48	2.60	2.73	2.85	2.98	3.11	3.23

XQE05 Heating Capacities

Size (Tons)	Model	Airflow CFM	Indoor Temp	Capacity & kw	Outdoor Temperature (F @ 72% RH)							
					-10	0	10	20	30	40	50	60
05 (4)	XQ	1200	55	MBH	7.9	14.6	21.2	27.9	34.5	41.1	47.8	54.4
				kW	3.1	3.2	3.3	3.4	3.5	3.6	3.7	3.8
			70	MBH	7.3	13.7	20.1	26.6	33.0	39.5	45.9	52.4
				kW	3.6	3.8	3.9	4.0	4.1	4.3	4.4	4.5
			80	MBH	6.6	13.0	19.3	25.7	32.1	38.4	44.8	51.2
				kW	4.1	4.2	4.4	4.5	4.7	4.8	5.0	5.1
		1600	55	MBH	8.3	15.1	21.9	28.7	35.5	42.3	49.1	55.9
				kW	3.0	3.1	3.1	3.2	3.3	3.3	3.4	3.4
			70	MBH	7.8	14.3	20.9	27.5	34.1	40.7	47.2	53.8
				kW	3.4	3.5	3.6	3.7	3.8	3.9	4.0	4.1
			80	MBH	7.0	13.5	20.0	26.5	33.0	39.5	46.0	52.6
				kW	3.8	3.9	4.0	4.1	4.2	4.3	4.4	4.5
		2000	55	MBH	9.1	16.0	22.8	29.7	36.6	43.4	50.3	57.2
				kW	3.3	3.4	3.4	3.4	3.5	3.5	3.6	3.6
			70	MBH	8.2	15.0	21.7	28.5	35.3	42.0	48.8	55.5
				kW	3.8	3.9	3.9	4.0	4.0	4.1	4.1	4.1
			80	MBH	7.0	13.7	20.5	27.3	34.1	40.9	47.6	54.4
				kW	4.2	4.2	4.3	4.3	4.4	4.5	4.5	4.6

XQE06 Heating Capacities

Size (Tons)	Model	Airflow CFM	Indoor Temp	Capacity & kw	Outdoor Temperature (F @ 72% RH)							
					-10	0	10	20	30	40	50	60
06 (5)	XQ	1500	55	MBH	8.4	16.7	24.9	33.1	41.3	49.5	57.7	66.0
				kW	3.6	3.7	3.8	4.0	4.1	4.3	4.4	4.5
			70	MBH	6.4	14.4	22.4	30.5	38.5	46.5	54.5	62.5
				kW	4.0	4.1	4.3	4.5	4.7	4.8	5.0	5.2
			80	MBH	--	13.2	21.1	29.0	36.9	44.8	52.7	60.6
				kW	4.4	4.6	4.8	4.9	5.1	5.3	5.5	5.7
		2000	55	MBH	7.8	16.3	24.8	33.2	41.7	50.1	58.6	67.1
				kW	3.8	3.9	4.0	4.1	4.2	4.3	4.4	4.5
			70	MBH	4.7	13.2	21.7	30.2	38.7	47.2	55.7	64.2
				kW	4.2	4.3	4.4	4.6	4.7	4.8	4.9	5.0
			80	MBH	--	9.5	18.2	27.0	35.7	44.5	53.2	61.9
				kW	4.5	4.7	4.8	4.9	5.1	5.2	5.3	5.5
		2500	55	MBH	7.8	16.5	25.3	34.0	42.7	51.4	60.1	68.8
				kW	4.0	4.1	4.1	4.2	4.2	4.3	4.4	4.4
			70	MBH	4.2	13.0	21.9	30.7	39.6	48.4	57.2	66.1
				kW	4.4	4.5	4.6	4.6	4.7	4.8	4.9	5.0
			80	MBH	3.7	12.2	20.7	29.2	37.8	46.3	54.8	63.3
				kW	4.8	4.9	5.0	5.1	5.2	5.2	5.3	5.4

Drive Selection

1. Determine side or bottom supply duct Application.
2. Determine desired airflow.
3. Calculate or measure the amount of external static pressure.
4. Add or deduct any additional static resistance from “Additional Static Resistance Table”.
5. Using the operating point determined from steps 1, 2 & 3, locate this point on the appropriate supply air blower performance table. (Linear interpolation may be necessary.)
6. Noting the RPM and BHP from step 4, locate the appropriate motor and, or drive on the RPM selection table.
7. Review the BHP compared to the motor options available. Select the appropriate motor and, or drive.
8. Review the RPM range for the motor options available. Select the appropriate drive if multiple drives are available for the chosen motor.
9. Determine turns open to obtain the desired operation point.

Example

1. 1600 CFM
2. 1.4 iwg
3. Using the airflow performance table below, the following data point was located: 1417 RPM & 1.28 BHP.
4. Using the RPM selection table below, Model XYE and Size 05 (4-Tons) is found.
5. The High Static Option is selected to achieve the required 1417 RPM.
6. Using the High Static Option, 2 turns open will achieve 1417 RPM.

Airflow Performance

Example Supply Air Blower Performance
XYE05 (4.0 Ton) Bottom Duct

CFM	Available External Static																			
	0.2		0.4		0.6		0.8		1.0		1.2		1.4		1.6		1.8		2.0	
	RPM	BHP	RPM	BHP	RPM	BHP	RPM	BHP	RPM	BHP	RPM	BHP	RPM	BHP	RPM	BHP	RPM	BHP	RPM	BHP
1200	801	0.25	903	0.38	999	0.51	1089	0.63	1173	0.76	1252	0.88	1327	1.00	1396	1.11	1461	1.22	1521	1.33
1300	822	0.31	924	0.44	1020	0.57	1110	0.69	1194	0.82	1273	0.94	1348	1.06	1417	1.17	1482	1.28	1542	1.39
1400	844	0.38	946	0.51	1042	0.64	1132	0.76	1216	0.89	1295	1.01	1370	1.13	1439	1.24	1504	1.35	1564	1.46
1500	867	0.46	969	0.59	1065	0.71	1155	0.84	1239	0.96	1319	1.08	1393	1.20	1462	1.32	1527	1.43	1587	1.53
1600	891	0.54	993	0.67	1089	0.79	1179	0.92	1264	1.04	1343	1.16	1417	1.28	1486	1.40	1551	1.51	**1612**	**1.61**
1700	917	0.63	1019	0.75	1115	0.88	1205	1.01	1289	1.13	1368	1.25	1442	1.37	1512	1.48	1577	1.60	**1637**	**1.70**
1800	943	0.72	1045	0.85	1141	0.97	1231	1.10	1316	1.22	1395	1.34	1469	1.46	1538	1.58	**1603**	**1.69**	--	--
1900	971	0.81	1073	0.94	1169	1.07	1259	1.19	1344	1.32	1423	1.44	1497	1.56	1566	1.67	**1631**	**1.78**	--	--
2000	1000	0.92	1102	1.04	1198	1.17	1288	1.29	1372	1.42	1452	1.54	1526	1.66	1595	1.77	--	--	--	--

kW = 0.929 x BHP

	Medium Static Option with Motor rated at 2.4-hp
	High Static Option with Motor rated at 2.4-hp
Bold	Field-supplied AK41 x 3/4" fixed blower pulley with motor rated at 2.4-hp
--	Exceeds recommended blower speed

Example RPM Selection

Model	Size (Tons)	Airflow Option	Phase	Max BHP	Blower Sheave	Motor Sheave	6 Turns Open	5 Turns Open	4 Turns Open	3 Turns Open	2 Turns Open	1 Turns Open	Fully Closed
XYE	05 (4)	Std.						Direct Drive					
		Med.	3	2.4	AK46	1VL34	N/A	792	875	958	1042	1125	1208
		H. Static	3	2.4	AK46	1VL44	N/A	1167	1250	1333	1417	1500	1593

Example Additional Static Resistance

Model	Size (Tons)	CFM	Economizer[1 2]	4" Filter[1]	Electric Heat kW[2]				
					6/6.5	9.2/10.5/11	13.8/14/16	23	---
XYE	05 (4.0)	1200	0.24	---	0.01	0.01	0.02	0.03	---
		1300	0.28	---	0.01	0.01	0.03	0.03	---
		1400	0.33	---	0.02	0.02	0.03	0.04	---
		1500	0.44	---	0.02	0.02	0.04	0.04	---
		1600	0.52	---	0.02	0.02	0.04	0.05	---
		1700	0.59	---	0.03	0.03	0.05	0.05	---
		1800	0.66	---	0.03	0.03	0.05	0.06	---
		1900	0.74	---	0.04	0.04	0.06	0.07	---
		2000	0.81	---	0.04	0.04	0.07	0.08	---

Altitude and Temperature Correction for CFM, Static Pressure and Power.

The information below should be used to assist in application of product when being applied at altitudes at or exceeding 1000 feet above sea level.

The air flow rates listed in the standard blower performance tables are based on standard air at sea level. As the altitude or temperature increases, the density of air decreases. In order to use the indoor blower tables for high altitude applications, certain corrections are necessary.

A centrifugal fan is a "constant volume" device. This means that, if the RPM remains constant, the CFM delivered is the same regardless of the density of the air. However, since the air at high altitude is less dense, less static pressure will be generated and less power will be required than a similar application at sea level. Air density correction factors are shown below.

Altitude/Temperature Correction Factors

Air Temp.	Altitude (Ft.)										
	0	1000	2000	3000	4000	5000	6000	7000	8000	9000	10000
40	1.060	1.022	0.986	0.950	0.916	0.882	0.849	0.818	0.788	0.758	0.729
50	1.039	1.002	0.966	0.931	0.898	0.864	0.832	0.802	0.772	0.743	0.715
60	1.019	0.982	0.948	0.913	0.880	0.848	0.816	0.787	0.757	0.729	0.701
70	1.000	0.964	0.930	0.896	0.864	0.832	0.801	0.772	0.743	0.715	0.688
80	0.982	0.947	0.913	0.880	0.848	0.817	0.787	0.758	0.730	0.702	0.676
90	0.964	0.929	0.897	0.864	0.833	0.802	0.772	0.744	0.716	0.689	0.663
100	0.946	0.912	0.880	0.848	0.817	0.787	0.758	0.730	0.703	0.676	0.651

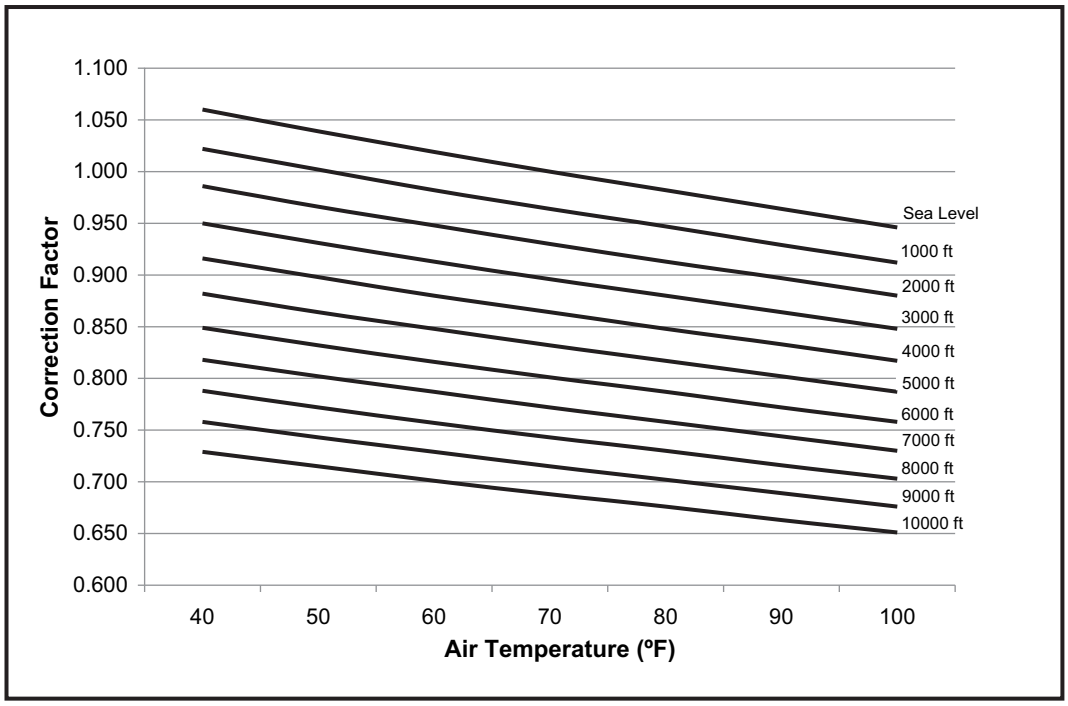

The examples below will assist in determining the airflow performance of the product at altitude.

Example 1: What are the corrected CFM, static pressure, and BHP at an elevation of 5,000 ft. if the airflow performance data is 3,000 CFM, 1.4 IWC and 2.0 BHP?

Solution: At an elevation of 5,000 ft. the indoor blower will still deliver 3,000 CFM if the rpm is unchanged. However, the Altitude correction must be used to determine the static pressure and BHP. Since no temperature data is given, we will assume an Air Temperature of 70°F. The Altitude/Temperature Factors show the correction factor to be 0.832.

Corrected static pressure = 1.4 x 0.832 = 1.16 IWC

Corrected BHP = 2.0 x 0.832 = 1.66

Example 2: A system, located at 5,000 feet of elevation, is to deliver 3,000 CFM at a static pressure of 1.4". Use the unit blower tables to select the blower speed and the BHP requirement.

Solution: As in the example above, no temperature information is given so 70°F is assumed.

The 1.4" static pressure given is at an elevation of 5,000 ft. The first step is to convert this static pressure to equivalent sea level conditions.

Sea level static pressure = 1.4" / .832 = 1.68"

Enter the Supply Air Blower Performance Table at 3,000 CFM and static pressure of 1.68". The rpm listed will be the same rpm needed at 5,000 ft.

Suppose that the corresponding BHP listed in the table is 2.0. This value must be corrected for elevation.

BHP at 5,000 ft. = 2.0 x .832 = 1.66

Indoor Blower Specifications

Model	Size (Tons)	Airflow Option	Motor						Motor Sheave			Blower Sheave			Belt
			Phase	Bhp	RPM	Eff.	SF	Frame	Datum Dia. (in.)	Bore (in.)	Model	Datum Dia. (in.)	Bore (in.)	Model	
XYE	04 (3)	Std.	Direct Drive												
		Med.	1	1.5	1725	0.79	1.15	56HZ	1.9 - 2.9	5/8	1VL34	4.2	3/4	AK46	A39
		Med.	3	2.4	1725	0.80	1.15	56Y	1.9 - 2.9	5/8	1VL34	4.2	3/4	AK46	A39
		H. Static	3	2.4	1725	0.80	1.15	56Y	2.8 - 3.8	5/8	1VL44	4.2	3/4	AK46	A40
XYE	05 (4)	Std.	Direct Drive												
		Med.	1	1.5	1725	0.79	1.15	56HZ	1.9 - 2.9	5/8	1VL34	4.2	3/4	AK46	A39
		Med.	3	2.4	1725	0.80	1.15	56Y	1.9 - 2.9	5/8	1VL34	4.2	3/4	AK46	A39
		H. Static	3	2.4	1725	0.80	1.15	56Y	2.8 - 3.8	5/8	1VL44	4.2	3/4	AK46	A40
XYE	06 (5)	Std.	Direct Drive												
		Med.	1	1.5	1750	0.83	1.15	56H	1.9 - 2.9	5/8	1VL34	4.2	3/4	AK46	A37
		Med.	3	2.4	1750	0.87	1.15	56HZ	1.9 - 2.9	5/8	1VL34	4.2	3/4	AK46	A37
		H. Static	3	2.9	1750	0.87	1.15	56Z	2.8 - 3.8	7/8	1VL44	4.2	3/4	AK46	A39
XYE	07 (6)	Std.	3	2.4	1725	0.80	1.15	56Y	1.9 - 2.9	5/8	1VL34	7.0	1	AK74	A47
		Med.	3	2.9	1725	0.81	1.15	56Y	2.8 - 3.8	7/8	1VL44	7.0	1	AK74	A48
		H. Static	3	3.7	1725	0.84	1.15	56HZ	3.4 - 4.4	7/8	1VP50	7.0	1	AK74	A48
XYE	A7 (6)	Std.	3	2.4	1725	0.80	1.15	56Y	1.9 - 2.9	5/8	1VL34	7.0	1	AK74	A47
		Med.	3	2.9	1725	0.81	1.15	56Y	2.8 - 3.8	7/8	1VL44	7.0	1	AK74	A48
		H. Static	3	3.7	1725	0.84	1.15	56HZ	3.4 - 4.4	7/8	1VP50	7.0	1	AK74	A48
XYE	08 (7.5)	Std.	3	2.4	1725	0.80	1.15	56Y	1.9 - 2.9	5/8	1VL34	7.0	1	AK74	A47
		Med.	3	2.4	1725	0.80	1.15	56Y	2.8 - 3.8	5/8	1VL44	7.0	1	AK74	A48
		H. Static	3	3.7	1725	0.84	1.15	56HZ	3.4 - 4.4	7/8	1VP50	7.0	1	AK74	A50
XYE	09 (8.5)	Std.	3	2.4	1725	0.80	1.15	56Y	1.9 - 2.9	5/8	1VL34	7.0	1	AK74	A47
		Med.	3	2.4	1725	0.80	1.15	56Y	2.8 - 3.8	5/8	1VL44	7.0	1	AK74	A48
		H. Static	3	3.7	1725	0.84	1.15	56HZ	3.4 - 4.4	7/8	1VP50	7.0	1	AK74	A50
XXE	A7 (6)	Std.	3	2.4	1725	0.80	1.15	56Y	1.9 - 2.9	5/8	1VL34	4.7	3/4	AK51	A39
		Med.	3	2.9	1725	0.81	1.15	56Y	2.8 - 3.8	7/8	1VL44	4.7	3/4	AK51	A40
		H. Static	3	3.7	1725	0.84	1.15	56HZ	3.4 - 4.4	7/8	1VP50	4.7	3/4	AK51	A41
XXE	08 (7.5)	Std.	3	2.4	1725	0.80	1.15	56Y	1.9 - 2.9	5/8	1VL34	7.0	1	AK74	A47
		Med.	3	2.4	1725	0.80	1.15	56Y	2.8 - 3.8	5/8	1VL44	7.0	1	AK74	A48
		H. Static	3	3.7	1725	0.84	1.15	56HZ	3.4 - 4.4	7/8	1VP50	7.0	1	AK74	A50
XXE	09 (8.5)	Std.	3	2.4	1725	0.80	1.15	56Y	1.9 - 2.9	5/8	1VL34	7.0	1	AK74	A47
		Med.	3	2.4	1725	0.80	1.15	56Y	2.8 - 3.8	5/8	1VL44	7.0	1	AK74	A48
		H. Static	3	3.7	1725	0.84	1.15	56HZ	3.4 - 4.4	7/8	1VP50	7.0	1	AK74	A50
XXE	12 (10)	Std.	3	2.4	1725	0.80	1.15	56Y	2.8 - 3.8	5/8	1VL44	7.5	1	AK79	A50
		Med.	3	3.7	1725	0.84	1.15	56HZ	3.4 - 4.4	7/8	1VP50	7.5	1	AK79	A50
		H. Static	3	5.25	1725	0.84	1.15	145TY	4.3 - 5.3	7/8	1VP56	7.9	1	BK85	BX52
XQE	04 (3)	Std.	Direct Drive												
		Med.	1	1.5	1725	0.79	1.15	56HZ	1.9 - 2.9	5/8	1VL34	4.2	3/4	AK46	A39
		Med.	3	2.4	1725	0.80	1.15	56Y	1.9 - 2.9	5/8	1VL34	4.2	3/4	AK46	A39
		H. Static	3	2.4	1725	0.80	1.15	56Y	2.8 - 3.8	5/8	1VL44	4.2	3/4	AK46	A40
XQE	05 (4)	Std.	Direct Drive												
		Med.	1	1.5	1725	0.79	1.15	56HZ	1.9 - 2.9	5/8	1VL34	4.2	3/4	AK46	A39
		Med.	3	2.4	1725	0.80	1.15	56Y	1.9 - 2.9	5/8	1VL34	4.2	3/4	AK46	A39
		H. Static	3	2.4	1725	0.80	1.15	56Y	2.8 - 3.8	5/8	1VL44	4.2	3/4	AK46	A40
XQE	06 (5)	Std.	Direct Drive												
		Med.	1	1.5	1750	0.83	1.15	56H	1.9 - 2.9	5/8	1VL34	4.2	3/4	AK46	A37
		Med.	3	2.4	1750	0.87	1.15	56HZ	1.9 - 2.9	5/8	1VL34	4.2	3/4	AK46	A37
		H. Static	3	2.9	1750	0.87	1.15	56Z	2.8 - 3.8	7/8	1VL44	4.2	3/4	AK46	A39

RPM Selection

Model	Size (Tons)	Airflow Option	Phase	Max BHP	Blower Sheave	Motor Sheave	6 Turns Open	5 Turns Open	4 Turns Open	3 Turns Open	2 Turns Open	1 Turns Open	Fully Closed
XYE	04 (3)	Std.					Direct Drive						
		Med	1	1.5	AK46	1VL34	N/A	792	875	958	1042	1125	1208
		Med	3	2.4	AK46	1VL34	N/A	792	875	958	1042	1125	1208
		H. Static	3	2.4	AK46	1VL44	N/A	1167	1250	1333	1417	1500	1593
XYE	05 (4)	Std.					Direct Drive						
		Med	1	1.5	AK46	1VL34	N/A	792	875	958	1042	1125	1208
		Med	3	2.4	AK46	1VL34	N/A	792	875	958	1042	1125	1208
		H. Static	3	2.4	AK46	1VL44	N/A	1167	1250	1333	1417	1500	1593
XYE	06 (5)	Std.					Direct Drive						
		Med	1	1.5	AK46	1VL34	N/A	792	875	958	1042	1125	1208
		Med	3	2.4	AK46	1VL34	N/A	792	875	958	1042	1125	1208
		H. Static	3	2.9	AK46	1VL44	N/A	1167	1250	1333	1417	1500	1593
XYE	07 (6)	Std.	3	2.4	AK74	1VL34	N/A	475	525	575	625	675	725
		Med.	3	2.9	AK74	1VL44	N/A	700	750	800	850	900	950
		H. Static	3	3.7	AK74	1VP50	N/A	850	900	950	1000	1050	1100
XYE	A7 (6)	Std.	3	2.4	AK74	1VL34	N/A	475	525	575	625	675	725
		Med.	3	2.9	AK74	1VL44	N/A	700	750	800	850	900	950
		H. Static	3	3.7	AK74	1VP50	N/A	850	900	950	1000	1050	1100
XYE	08 (7.5)	Std.	3	2.4	AK74	1VL34	N/A	475	525	575	625	675	725
		Med.	3	2.4	AK74	1VL44	N/A	700	750	800	850	900	950
		H. Static	3	3.7	AK74	1VP50	N/A	850	900	950	1000	1050	1100
XYE	09 (8.5)	Std.	3	2.4	AK74	1VL34	N/A	475	525	575	625	675	725
		Med.	3	2.4	AK74	1VL44	N/A	700	750	800	850	900	950
		H. Static	3	3.7	AK74	1VP50	N/A	850	900	950	1000	1050	1100
XXE	A7 (6)	Std.	3	2.4	AK51	1VL34	N/A	707	782	856	931	1005	1080
		Med.	3	2.9	AK51	1VL44	N/A	1043	1117	1191	1266	1340	1415
		H. Static	3	3.7	AK51	1VP50	N/A	1266	1340	1415	1489	1564	1638
XXE	08 (7.5)	Std.	3	2.4	AK74	1VL34	N/A	475	525	575	625	675	725
		Med.	3	2.9	AK74	1VL44	N/A	700	750	800	850	900	950
		H. Static	3	3.7	AK74	1VP50	N/A	850	900	950	1000	1050	1100
XXE	9 (8.5)	Std.	3	2.4	AK74	1VL34	N/A	475	525	575	625	675	725
		Med.	3	2.4	AK74	1VL44	N/A	700	750	800	850	900	950
		H. Static	3	3.7	AK74	1VP50	N/A	850	900	950	1000	1050	1100
XXE	12 (10)	Std.	3	2.4	AK79	1VL44	N/A	653	700	747	793	840	887
		Med.	3	3.7	AK79	1VP50	N/A	793	840	887	933	980	1027
		H. Static	3	5.25	BK85	1VP56	953	997	1041	1085	1130	1174	N/A
XQE	04 (3)	Std.					Direct Drive						
		Med	1	1.5	AK46	1VL34	N/A	792	875	958	1042	1125	1208
		Med	3	2.4	AK46	1VL34	N/A	792	875	958	1042	1125	1208
		H. Static	3	2.4	AK46	1VL44	N/A	1167	1250	1333	1417	1500	1593
XQE	05 (4)	Std.					Direct Drive						
		Med	1	1.5	AK46	1VL34	N/A	792	875	958	1042	1125	1208
		Med	3	2.4	AK46	1VL34	N/A	792	875	958	1042	1125	1208
		H. Static	3	2.4	AK46	1VL44	N/A	1167	1250	1333	1417	1500	1593
XQE	06 (5)	Std.					Direct Drive						
		Med	1	1.5	AK46	1VL34	N/A	792	875	958	1042	1125	1208
		Med	3	2.4	AK46	1VL34	N/A	792	875	958	1042	1125	1208
		H. Static	3	2.9	AK46	1VL44	N/A	1167	1250	1333	1417	1500	1593

Additional Static Resistance - XYE04-06

Model	Size (Tons)	CFM	Economizer[1 2]	4" Filter[1]	Electric Heat kW[2]				
					6/6.5	9.2/10.5/11	13.8/14/16	23	---
XYE	04 (3.0)	900	0.15	---	0.00	0.00	0.01	0.01	---
		1000	0.18	---	0.00	0.00	0.02	0.02	---
		1100	0.21	---	0.01	0.01	0.02	0.03	---
		1200	0.24	---	0.01	0.01	0.02	0.03	---
		1300	0.28	---	0.01	0.01	0.03	0.03	---
		1400	0.33	---	0.02	0.02	0.03	0.04	---
		1500	0.44	---	0.02	0.02	0.04	0.04	---
XYE	05 (4.0)	1200	0.24	---	0.01	0.01	0.02	0.03	---
		1300	0.28	---	0.01	0.01	0.03	0.03	---
		1400	0.33	---	0.02	0.02	0.03	0.04	---
		1500	0.44	---	0.02	0.02	0.04	0.04	---
		1600	0.52	---	0.02	0.02	0.04	0.05	---
		1700	0.59	---	0.03	0.03	0.05	0.05	---
		1800	0.66	---	0.03	0.03	0.05	0.06	---
		1900	0.74	---	0.04	0.04	0.06	0.07	---
		2000	0.81	---	0.04	0.04	0.07	0.08	---
XYE	06 (5.0)	1800	0.66	---	0.03	0.03	0.05	0.06	---
		2000	0.81	---	0.04	0.04	0.07	0.08	---
		2200	0.95	---	0.06	0.06	0.08	0.09	---
		2400	1.10	---	0.07	0.07	0.10	0.11	---
		2500	1.17	---	0.08	0.08	0.11	0.12	---

1. Deduct these values from the available external static pressure shown in the respective Blower Performance Tables.
2. The pressure drop through the economizer is greater for 100% outdoor air than for 100% return air. If the resistance of the return air duct is less than 0.25 IWG, the unit will deliver less CFM during full economizer operation.

Additional Static Resistance - XYE07, XYEA7

Model	Size (Tons)	CFM	Economizer[1 2]	4" Filter[1]	Electric Heat kW[2]		
					6/6.5	16/16.5/17	24.8/25.5/27.8
XYE	07 (6) A7 (6)	1800	0.11	---	0.03	0.05	0.06
		1900	0.11	---	0.04	0.06	0.06
		2000	0.11	---	0.04	0.06	0.07
		2100	0.12	---	0.05	0.07	0.08
		2200	0.12	---	0.06	0.07	0.09
		2300	0.12	---	0.06	0.08	0.09
		2400	0.13	---	0.07	0.08	0.10
		2500	0.13	---	0.08	0.09	0.11
		2600	0.13	---	0.08	0.09	0.11
		2700	0.15	---	0.09	0.10	0.12
		2800	0.15	---	0.09	0.10	0.12
		2900	0.16	---	0.10	0.11	0.13
		3000	0.17	---	0.11	0.12	0.14

1. Deduct these values from the available external static pressure shown in the respective Blower Performance Tables.
2. The pressure drop through the economizer is greater for 100% outdoor air than for 100% return air. If the resistance of the return air duct is less than 0.25 IWG, the unit will deliver less CFM during full economizer operation.

Additional Static Resistance - XYE08 thru 09

Model	Size (Tons)	CFM	Economizer[1 2]	4" Filter[1]	Electric Heat kW[2]			
					16/16.5/17	24.8/25.5/27.8	32/33/34	41.7/42.4
XYE	08 (7.5), 09 (8.5)	2200	0.11	---	0.07	0.09	0.10	0.12
		2600	0.13	---	0.09	0.11	0.12	0.15
		3000	0.17	---	0.12	0.14	0.15	0.19
		3400	0.20	---	0.15	0.18	0.19	0.23
		3800	0.25	---	0.19	0.22	0.23	0.27
		4000	0.28	---	0.21	0.24	0.25	0.30
		4400	0.33	---	0.25	0.29	0.30	0.35
		4800	0.38	---	0.30	0.34	0.35	0.41
		5200	0.43	---	0.35	0.39	0.41	0.47
		5600	0.46	---	0.41	0.45	0.47	0.54
		6000	0.50	---	0.48	0.52	0.54	0.60

1. Deduct these values from the available external static pressure shown in the respective Blower Performance Tables.
2. The pressure drop through the economizer is greater for 100% outdoor air than for 100% return air. If the resistance of the return air duct is less than 0.25 IWG, the unit will deliver less CFM during full economizer operation.

Additional Static Resistance - XXEA7

Model	Size (Tons)	CFM	Economizer [1 2]	4" Filter[2]	Electric Heat kW[2]							
					6/6.5	9.2/10.5/11	13.8/14/16	16/16.5/17	23	24.8/25.5/27.8	32/33/34	41.7/42.4
XXE	A7 (6.0)	1800	0.13	---	0.03	0.03	0.05	---	---	---	---	---
		2000	0.15	---	0.04	0.04	0.06	---	---	---	---	---
		2200	0.18	---	0.06	0.06	0.07	---	---	---	---	---
		2400	0.21	---	0.07	0.07	0.08	---	---	---	---	---
		2600	0.24	---	0.08	0.08	0.09	---	---	---	---	---
		2800	0.29	---	0.09	0.09	0.10	---	---	---	---	---
		3000	0.35	---	0.11	0.11	0.12	---	---	---	---	---

1. Deduct these values from the available external static pressure shown in the respective Blower Performance Tables.
2. The pressure drop through the economizer is greater for 100% outdoor air than for 100% return air. If the resistance of the return air duct is less than 0.25 IWG, the unit will deliver less CFM during full economizer operation.

Additional Static Resistance - XXE08-12

Model	Size (Tons)	CFM	Economizer[1 2]	4" Filter[1]	Electric Heat kW[2]			
					16/16.5/17	24.8/25.5/27.8	32/33/34	41.7/42.4
XXE	08 (7.5), 09 (8.5)	2200	0.11	---	0.07	0.09	0.10	0.12
		2600	0.13	---	0.09	0.11	0.12	0.15
		3000	0.17	---	0.12	0.14	0.15	0.19
		3400	0.20	---	0.15	0.18	0.19	0.23
		3800	0.25	---	0.19	0.22	0.23	0.27
		4000	0.28	---	0.21	0.24	0.25	0.30
		4400	0.33	---	0.25	0.29	0.30	0.35
		4800	0.38	---	0.30	0.34	0.35	0.41
		5200	0.43	---	0.35	0.39	0.41	0.47
		5600	0.46	---	0.41	0.45	0.47	0.54
		6000	0.50	---	0.48	0.52	0.54	0.60
XXE	12 (10.0)	2200	0.11	---	0.07	0.09	0.10	0.12
		2600	0.13	---	0.09	0.11	0.12	0.15
		3000	0.17	---	0.12	0.14	0.15	0.19
		3400	0.20	---	0.15	0.18	0.19	0.23
		3800	0.25	---	0.19	0.22	0.23	0.27
		4000	0.28	---	0.21	0.24	0.25	0.30
		4400	0.33	---	0.25	0.29	0.30	0.35
		4800	0.38	---	0.30	0.34	0.35	0.41
		5200	0.43	---	0.35	0.39	0.41	0.47
		5600	0.46	---	0.41	0.45	0.47	0.54
		6000	0.50	---	0.48	0.52	0.54	0.60

1. Deduct these values from the available external static pressure shown in the respective Blower Performance Tables.
2. The pressure drop through the economizer is greater for 100% outdoor air than for 100% return air. If the resistance of the return air duct is less than 0.25 IWG, the unit will deliver less CFM during full economizer operation.

Additional Static Resistance - XQE04-06

Model	Size (Tons)	CFM	Economizer[1 2]	4" Filter[1]	Electric Heat kW[2]				
					6/6.5	9.2/10.5/11	13.8/14/16	23	---
XQE	04 (3.0)	900	0.15	---	0.00	0.00	0.01	0.01	---
		1000	0.18	---	0.00	0.00	0.02	0.02	---
		1100	0.21	---	0.01	0.01	0.02	0.03	---
		1200	0.24	---	0.01	0.01	0.02	0.03	---
		1300	0.28	---	0.01	0.01	0.03	0.03	---
		1400	0.33	---	0.02	0.02	0.03	0.04	---
		1500	0.44	---	0.02	0.02	0.04	0.04	---
XQE	05 (4.0)	1200	0.24	---	0.01	0.01	0.02	0.03	---
		1300	0.28	---	0.01	0.01	0.03	0.03	---
		1400	0.33	---	0.02	0.02	0.03	0.04	---
		1500	0.44	---	0.02	0.02	0.04	0.04	---
		1600	0.52	---	0.02	0.02	0.04	0.05	---
		1700	0.59	---	0.03	0.03	0.05	0.05	---
		1800	0.66	---	0.03	0.03	0.05	0.06	---
		1900	0.74	---	0.04	0.04	0.06	0.07	---
		2000	0.81	---	0.04	0.04	0.07	0.08	---
XQE	06 (5.0)	1800	0.66	---	0.03	0.03	0.05	0.06	---
		2000	0.81	---	0.04	0.04	0.07	0.08	---
		2200	0.95	---	0.06	0.06	0.08	0.09	---
		2400	1.10	---	0.07	0.07	0.10	0.11	---
		2500	1.17	---	0.08	0.08	0.11	0.12	---

1. Deduct these values from the available external static pressure shown in the respective Blower Performance Tables.
2. The pressure drop through the economizer is greater for 100% outdoor air than for 100% return air. If the resistance of the return air duct is less than 0.25 IWG, the unit will deliver less CFM during full economizer operation.

Airflow Performance

XYE04-09 Side Duct Application (Belt Drive)

XYE04 (3.0 Ton) Side Duct

CFM	Available External Static																			
	0.2		0.4		0.6		0.8		1.0		1.2		1.4		1.6		1.8		2.0	
	RPM	BHP	RPM	BHP	RPM	BHP	RPM	BHP	RPM	BHP	RPM	BHP	RPM	BHP	RPM	BHP	RPM	BHP	RPM	BHP
900			810	0.27	922	0.38	1024	0.49	1118	0.59	1205	0.69	1285	0.80	1359	0.91	1429	1.03	1496	1.16
1000	**703**	**0.19**	826	0.31	938	0.43	1041	0.53	1135	0.64	1221	0.74	1301	0.85	1376	0.96	1446	1.08	1513	1.21
1100	**721**	**0.25**	843	0.37	956	0.48	1058	0.59	1152	0.69	1239	0.80	1319	0.90	1393	1.01	1463	1.13	1530	1.26
1200	**738**	**0.31**	861	0.43	973	0.54	1076	0.65	1170	0.75	1256	0.86	1336	0.96	1411	1.08	1481	1.19	1548	1.33
1300	**756**	**0.38**	879	0.50	991	0.61	1094	0.72	1188	0.82	1274	0.92	1354	1.03	1429	1.14	1499	1.26	1566	1.39
1400	**774**	**0.45**	897	0.57	1009	0.68	1112	0.79	1206	0.89	1292	1.00	1372	1.10	1447	1.21	1517	1.33	1584	1.47
1500	792	0.53	915	0.65	1027	0.76	1129	0.87	1223	0.97	1310	1.07	1390	1.18	1464	1.29	1535	1.41	**1602**	**1.54**

kW = 0.929 x BHP

Bold	Field-supplied AK51 x 3/4" fixed blower pulley with motor rated at 2.4-hp
	Medium Static Option with Motor rated at 2.4-hp
	High Static Option with Motor rated at 2.4-hp
Bold	Field-supplied AK41 x 3/4" fixed blower pulley with motor rated at 2.4-hp

XYE05 (4.0 Ton) Side Duct

CFM	Available External Static																			
	0.2		0.4		0.6		0.8		1.0		1.2		1.4		1.6		1.8		2.0	
	RPM	BHP	RPM	BHP	RPM	BHP	RPM	BHP	RPM	BHP	RPM	BHP	RPM	BHP	RPM	BHP	RPM	BHP	RPM	BHP
1200	**759**	**0.28**	860	0.38	957	0.49	1050	0.62	1139	0.76	1224	0.89	1306	1.03	1383	1.15	1457	1.26	1527	1.36
1300	**777**	**0.34**	878	0.44	975	0.55	1068	0.68	1157	0.81	1242	0.95	1324	1.08	1401	1.21	1475	1.32	1545	1.42
1400	796	0.40	897	0.50	995	0.61	1088	0.74	1177	0.88	1262	1.01	1343	1.15	1420	1.27	1494	1.38	1564	1.48
1500	816	0.46	918	0.56	1015	0.68	1108	0.81	1197	0.94	1282	1.08	1363	1.21	1440	1.34	1514	1.45	1584	1.54
1600	837	0.53	938	0.63	1035	0.75	1129	0.88	1218	1.01	1303	1.15	1384	1.28	1461	1.41	1535	1.52	**1605**	**1.61**
1700	858	0.61	960	0.71	1057	0.83	1150	0.95	1239	1.09	1324	1.22	1405	1.36	1482	1.48	1556	1.60	**1626**	**1.69**
1800	880	0.69	981	0.79	1078	0.91	1171	1.04	1260	1.17	1345	1.31	1427	1.44	1504	1.57	1578	1.68	**1648**	**1.77**
1900	902	0.78	1003	0.88	1100	1.00	1193	1.12	1282	1.26	1367	1.40	1448	1.53	1526	1.65	1599	1.77	--	--
2000	924	0.88	1025	0.98	1122	1.09	1215	1.22	1304	1.35	1389	1.49	1470	1.62	1548	1.75	**1621**	**1.86**	--	--

kW = 0.929 x BHP

Bold	Field-supplied AK51 x 3/4" fixed blower pulley with motor rated at 2.4-hp
	Medium Static Option with Motor rated at 2.4-hp
	High Static Option with Motor rated at 2.4-hp
Bold	Field-supplied AK41 x 3/4" fixed blower pulley with motor rated at 2.4-hp
--	Exceeds recommended blower speed

XYE06 (5.0 Ton) Side Duct

CFM	Available External Static																			
	0.2		0.4		0.6		0.8		1.0		1.2		1.4		1.6		1.8		2.0	
	RPM	BHP	RPM	BHP	RPM	BHP	RPM	BHP	RPM	BHP	RPM	BHP	RPM	BHP	RPM	BHP	RPM	BHP	RPM	BHP
1500	**770**	**0.40**	836	0.50	901	0.60	964	0.69	1025	0.79	1084	0.89	1142	0.98	1197	1.07	1250	1.15	1300	1.23
1600	**779**	**0.45**	845	0.54	910	0.64	973	0.74	1034	0.83	1093	0.93	1151	1.02	1206	1.11	1259	1.20	1309	1.27
1700	**791**	**0.50**	857	0.60	922	0.69	985	0.79	1046	0.89	1105	0.98	1162	1.07	1218	1.16	1271	1.25	1321	1.33
1800	805	0.56	872	0.66	936	0.75	999	0.85	1060	0.95	1120	1.04	1177	1.13	1232	1.22	1285	1.31	1335	1.39
1900	822	0.63	888	0.72	953	0.82	1016	0.92	1077	1.01	1136	1.11	1194	1.20	1249	1.29	1302	1.38	1352	1.46
2000	841	0.70	907	0.80	972	0.89	1035	0.99	1096	1.09	1155	1.18	1212	1.27	1268	1.36	1321	1.45	1371	1.53
2100	862	0.78	928	0.87	993	0.97	1056	1.07	1117	1.16	1176	1.26	1233	1.35	1289	1.44	1341	1.53	1392	1.61
2200	885	0.86	951	0.96	1016	1.05	1079	1.15	1140	1.25	1199	1.34	1256	1.43	1311	1.52	1364	1.61	1415	1.69
2300	910	0.95	976	1.04	1040	1.14	1103	1.23	1165	1.33	1224	1.43	1281	1.52	1336	1.61	1389	1.69	1440	1.77
2400	936	1.03	1002	1.13	1067	1.23	1130	1.32	1191	1.42	1250	1.52	1307	1.61	1362	1.70	1415	1.78	1466	1.86
2500	964	1.13	1030	1.22	1095	1.32	1158	1.41	1219	1.51	1278	1.61	1335	1.70	1390	1.79	1443	1.87	1494	1.95

kW = 0.857 x BHP

Bold	Field-supplied AK51 x 3/4" fixed blower pulley with motor rated at 2.4-hp
	Medium Static Option with Motor rated at 2.4-hp
	High Static Option with Motor rated at 2.9-hp

XYE07 (6.0 Ton) Side Duct

CFM	Available External Static																			
	0.20		0.40		0.60		0.80		1.00		1.20		1.40		1.60		1.80		2.00	
	RPMs	BHP	RPMs	BHP	RPMs	BHP	RPMs	BHP	RPMs	BHP	RPMs	BHP	RPMs	BHP	RPMs	BHP	RPMs	BHP	RPMs	BHP
1800	532	0.30	592	0.48	647	0.66	698	0.84	746	1.02	793	1.19	842	1.34	892	1.48	946	1.60	1006	1.69
1900	540	0.34	600	0.52	655	0.70	706	0.88	754	1.06	802	1.23	850	1.39	900	1.52	954	1.64	1014	1.73
2000	548	0.39	609	0.56	664	0.74	714	0.92	763	1.10	810	1.27	859	1.43	909	1.57	963	1.68	1023	1.77
2100	558	0.43	618	0.61	673	0.79	724	0.97	772	1.15	820	1.32	868	1.47	918	1.61	972	1.73	1032	1.82
2200	567	0.48	628	0.66	683	0.84	733	1.02	782	1.20	829	1.37	877	1.52	928	1.66	982	1.78	1042	1.86
2300	578	0.53	638	0.71	693	0.89	744	1.07	792	1.25	839	1.42	888	1.57	938	1.71	992	1.83	1052	1.91
2400	588	0.59	648	0.76	703	0.94	754	1.12	802	1.30	850	1.47	898	1.63	948	1.77	1003	1.88	1062	1.97
2500	599	0.64	659	0.82	714	1.00	765	1.18	813	1.36	861	1.53	909	1.69	959	1.82	1013	1.94	1073	2.03
2600	610	0.71	670	0.88	725	1.06	776	1.24	824	1.42	872	1.59	920	1.75	971	1.89	1025	2.00	1084	2.09
2700	622	0.77	682	0.95	737	1.13	788	1.31	836	1.49	883	1.66	932	1.81	982	1.95	1036	2.07	1096	2.16
2800	633	0.84	694	1.02	749	1.20	799	1.38	848	1.56	895	1.73	943	1.89	994	2.02	1048	2.14	-	-
2900	646	0.92	706	1.09	761	1.27	812	1.46	860	1.63	907	1.80	956	1.96	1006	2.10	1060	2.21	-	-
3000	658	1.00	718	1.17	773	1.35	824	1.54	872	1.71	920	1.88	968	2.04	1018	2.18	1073	2.29	-	-

Standard Static Option with Motor rated at 2.4-Max Bhp
Medium Static Option with Motor rated at 2.9-Max Bhp
High Static Option with Motor rated at 3.7-Max Bhp
-- Exceeds recommended blower speed
kW = 0.929 x BHP for Standard & Medium Static options kW = 0.895 x BHP for High Static option

XYEA7 (6.0 Ton) Side Duct

CFM	Available External Static																			
	0.20		0.40		0.60		0.80		1.00		1.20		1.40		1.60		1.80		2.00	
	RPMs	BHP	RPMs	BHP	RPMs	BHP	RPMs	BHP	RPMs	BHP	RPMs	BHP	RPMs	BHP	RPMs	BHP	RPMs	BHP	RPMs	BHP
1800	532	0.30	592	0.48	647	0.66	698	0.84	746	1.02	793	1.19	842	1.34	892	1.48	946	1.60	1006	1.69
1900	540	0.34	600	0.52	655	0.70	706	0.88	754	1.06	802	1.23	850	1.39	900	1.52	954	1.64	1014	1.73
2000	548	0.39	609	0.56	664	0.74	714	0.92	763	1.10	810	1.27	859	1.43	909	1.57	963	1.68	1023	1.77
2100	558	0.43	618	0.61	673	0.79	724	0.97	772	1.15	820	1.32	868	1.47	918	1.61	972	1.73	1032	1.82
2200	567	0.48	628	0.66	683	0.84	733	1.02	782	1.20	829	1.37	877	1.52	928	1.66	982	1.78	1042	1.86
2300	578	0.53	638	0.71	693	0.89	744	1.07	792	1.25	839	1.42	888	1.57	938	1.71	992	1.83	1052	1.91
2400	588	0.59	648	0.76	703	0.94	754	1.12	802	1.30	850	1.47	898	1.63	948	1.77	1003	1.88	1062	1.97
2500	599	0.64	659	0.82	714	1.00	765	1.18	813	1.36	861	1.53	909	1.69	959	1.82	1013	1.94	1073	2.03
2600	610	0.71	670	0.88	725	1.06	776	1.24	824	1.42	872	1.59	920	1.75	971	1.89	1025	2.00	1084	2.09
2700	622	0.77	682	0.95	737	1.13	788	1.31	836	1.49	883	1.66	932	1.81	982	1.95	1036	2.07	1096	2.16
2800	633	0.84	694	1.02	749	1.20	799	1.38	848	1.56	895	1.73	943	1.89	994	2.02	1048	2.14	-	-
2900	646	0.92	706	1.09	761	1.27	812	1.46	860	1.63	907	1.80	956	1.96	1006	2.10	1060	2.21	-	-
3000	658	1.00	718	1.17	773	1.35	824	1.54	872	1.71	920	1.88	968	2.04	1018	2.18	1073	2.29	-	-

Standard Static Option with Motor rated at 2.4-Max Bhp
Medium Static Option with Motor rated at 2.4-Max Bhp
High Static Option with Motor rated at 3.7-Max Bhp
-- Exceeds recommended blower speed

XYE08 (7.5 Ton) Side Duct

CFM	Available External Static																			
	0.2		0.4		0.6		0.8		1.0		1.2		1.4		1.6		1.8		2.0	
	RPM	BHP	RPM	BHP	RPM	BHP	RPM	BHP	RPM	BHP	RPM	BHP	RPM	BHP	RPM	BHP	RPM	BHP	RPM	BHP
2250	562	0.17	616	0.36	671	0.57	726	0.78	781	1.00	835	1.20	886	1.40	935	1.59	979	1.75	1019	1.89
2400	567	0.26	620	0.45	675	0.65	730	0.87	785	1.08	839	1.29	890	1.49	939	1.67	983	1.84	1023	1.97
2600	572	0.38	625	0.58	680	0.78	736	0.99	790	1.21	844	1.42	895	1.62	944	1.80	989	1.96	1029	2.10
2800	578	0.53	632	0.72	687	0.93	742	1.14	797	1.35	850	1.56	902	1.76	950	1.95	995	2.11	1035	2.24
3000	586	0.69	639	0.88	694	1.08	749	1.30	804	1.51	858	1.72	909	1.92	958	2.10	1002	2.27	1043	2.40
3200	595	0.86	648	1.05	703	1.25	758	1.46	813	1.68	867	1.89	918	2.09	967	2.27	1012	2.43	1052	2.57
3400	606	1.03	660	1.23	714	1.43	770	1.64	824	1.86	878	2.07	930	2.27	978	2.45	1023	2.61	1063	2.75
3600	619	1.22	673	1.41	728	1.62	783	1.83	838	2.04	891	2.25	943	2.45	991	2.63	1036	2.80	1076	2.93
3750	631	1.36	684	1.55	739	1.76	794	1.97	849	2.19	903	2.39	954	2.59	1003	2.78	1047	2.94	1087	3.08

Standard Static Option with Motor rated at 2.4-hp
Medium Static Option with Motor rated at 2.4-hp
High Static Option with Motor rated at 3.7-hp
kW = 0.929 x BHP for Standard & Medium Static options kW = 0.895 x BHP for High Static option

XYE09 (8.5 Ton) Side Duct

CFM	Available External Static																			
	0.2		0.4		0.6		0.8		1.0		1.2		1.4		1.6		1.8		2.0	
	RPM	BHP	RPM	BHP	RPM	BHP	RPM	BHP	RPM	BHP	RPM	BHP	RPM	BHP	RPM	BHP	RPM	BHP	RPM	BHP
2550	571	0.35	624	0.54	679	0.75	734	0.96	789	1.17	843	1.38	894	1.58	943	1.77	987	1.93	1027	2.07
2600	572	0.38	625	0.58	680	0.78	736	0.99	790	1.21	844	1.42	895	1.62	944	1.80	989	1.96	1029	2.10
2800	578	0.53	632	0.72	687	0.93	742	1.14	797	1.35	850	1.56	902	1.76	950	1.95	995	2.11	1035	2.24
3000	586	0.69	639	0.88	694	1.08	749	1.30	804	1.51	858	1.72	909	1.92	958	2.10	1002	2.27	1043	2.40
3200	595	0.86	648	1.05	703	1.25	758	1.46	813	1.68	867	1.89	918	2.09	967	2.27	1012	2.43	1052	2.57
3400	606	1.03	660	1.23	714	1.43	770	1.64	824	1.86	878	2.07	930	2.27	978	2.45	1023	2.61	1063	2.75
3600	619	1.22	673	1.41	728	1.62	783	1.83	838	2.04	891	2.25	943	2.45	991	2.63	1036	2.80	1076	2.93
3800	635	1.41	688	1.60	743	1.81	798	2.02	853	2.23	907	2.44	958	2.64	1007	2.83	1051	2.99	1091	3.13
4000	652	1.61	706	1.80	761	2.01	816	2.22	871	2.43	924	2.64	976	2.84	1024	3.02	1069	3.19	--	--
4200	672	1.81	726	2.00	781	2.21	**836**	**2.42**	891	2.64	944	2.84	996	3.04	1044	3.23	1089	3.39	--	--
4250	678	1.86	731	2.06	786	2.26	**841**	**2.47**	896	2.69	950	2.90	1001	3.10	1050	3.28	1094	3.44	--	--

Standard Static Option with Motor rated at 2.4-hp
Medium Static Option with Motor rated at 2.4-hp
High Static Option with Motor rated at 3.7-hp
Bold Field-supplied AK79 x 1 fixed pulley with Motor rated at 3.7-hp
-- Exceeds recommended blower speed
kW = 0.929 x BHP for Standard & Medium Static options kW = 0.895 x BHP for High Static option

XXEA7, XXE08 - XXE09, XXE12 Side Duct Application (Belt Drive)

XXEA7 (6.0 Ton) Side Duct

CFM	Available External Static Pressure - IWG																			
	0.2		0.4		0.6		0.8		1.0		1.2		1.4		1.6		1.8		2.0	
	RPM	BHP	RPM	BHP	RPM	BHP	RPM	BHP	RPM	BHP	RPM	BHP	RPM	BHP	RPM	BHP	RPM	BHP	RPM	BHP
1800	845	0.46	901	0.58	959	0.71	1017	0.83	1076	0.96	1133	1.08	1188	1.21	1240	1.34	1288	1.47	1332	1.60
1900	860	0.53	917	0.66	974	0.78	1033	0.91	1091	1.03	1148	1.16	1203	1.28	1255	1.41	1303	1.54	1347	1.68
2000	878	0.62	934	0.74	992	0.86	1050	0.99	1108	1.11	1165	1.24	1220	1.36	1272	1.49	1321	1.62	1365	1.76
2100	897	0.70	954	0.83	1011	0.95	1070	1.08	1128	1.20	1185	1.33	1240	1.45	1292	1.58	1340	1.71	1384	1.84
2200	919	0.80	975	0.92	1033	1.05	1091	1.17	1149	1.29	1206	1.42	1261	1.55	1313	1.68	1362	1.81	1406	1.94
2300	942	0.90	998	1.02	1056	1.15	1114	1.27	1172	1.40	1229	1.52	1284	1.65	1336	1.78	1385	1.91	1429	2.04
2400	966	1.01	1022	1.14	1080	1.26	1138	1.38	1196	1.51	1253	1.63	1308	1.76	1361	1.89	1409	2.02	1453	2.15
2500	992	1.13	1048	1.25	1106	1.38	1164	1.50	1222	1.63	1279	1.75	1334	1.88	1386	2.01	1435	2.14	1479	2.27
2600	1018	1.26	1075	1.38	1132	1.51	1191	1.63	1249	1.76	1306	1.88	1361	2.01	1413	2.14	1461	2.27	1505	2.40
2700	1046	1.40	1102	1.52	1160	1.64	1218	1.77	1276	1.89	1333	2.02	1388	2.14	1441	2.27	1489	2.40	1533	2.54
2800	1075	1.54	1131	1.67	1188	1.79	1247	1.91	1305	2.04	1362	2.16	1417	2.29	1469	2.42	1518	2.55	1561	2.68
2900	1104	1.70	1160	1.82	1218	1.94	1276	2.07	1334	2.19	1391	2.32	1446	2.45	1498	2.57	1547	2.70	1591	2.84
3000	1134	1.86	1190	1.98	1248	2.11	1306	2.23	1364	2.36	1421	2.48	1476	2.61	1528	2.74	1577	2.87	1621	3.00

Standard Static Option with Motor rated at 2.4-hp
Medium Static Option with Motor rated at 2.9-hp
High Static Option with Motor rated at 3.7-hp
- Exceeds recommended blower speed

Note: See RPM SELECTION table to determine desired motor sheave setting and to determine the maximum continuous BHP.
kW = 0.929 x BHP

XXE08 (7.5 Ton) Side Duct

CFM	Available External Static																			
	0.2		0.4		0.6		0.8		1.0		1.2		1.4		1.6		1.8		2.0	
	RPM	BHP	RPM	BHP	RPM	BHP	RPM	BHP	RPM	BHP	RPM	BHP	RPM	BHP	RPM	BHP	RPM	BHP	RPM	BHP
2250	562	0.17	616	0.36	671	0.57	726	0.78	781	1.00	835	1.20	886	1.40	935	1.59	979	1.75	1019	1.89
2400	567	0.26	620	0.45	675	0.65	730	0.87	785	1.08	839	1.29	890	1.49	939	1.67	983	1.84	1023	1.97
2600	572	0.38	625	0.58	680	0.78	736	0.99	790	1.21	844	1.42	895	1.62	944	1.80	989	1.96	1029	2.10
2800	578	0.53	632	0.72	687	0.93	742	1.14	797	1.35	850	1.56	902	1.76	950	1.95	995	2.11	1035	2.24
3000	586	0.69	639	0.88	694	1.08	749	1.30	804	1.51	858	1.72	909	1.92	958	2.10	1002	2.27	1043	2.40
3200	595	0.86	648	1.05	703	1.25	758	1.46	813	1.68	867	1.89	918	2.09	967	2.27	1012	2.43	1052	2.57
3400	606	1.03	660	1.23	714	1.43	770	1.64	824	1.86	878	2.07	930	2.27	978	2.45	1023	2.61	1063	2.75
3600	619	1.22	673	1.41	728	1.62	783	1.83	838	2.04	891	2.25	943	2.45	991	2.63	1036	2.80	1076	2.93
3750	631	1.36	684	1.55	739	1.76	794	1.97	849	2.19	903	2.39	954	2.59	1003	2.78	1047	2.94	1087	3.08

Standard Static Option with Motor rated at 2.4-hp
Medium Static Option with Motor rated at 2.4-hp
High Static Option with Motor rated at 3.7-hp
kW = 0.929 x BHP for Standard & Medium Static options kW = 0.895 x BHP for High Static option

XXE09 (8.5 Ton) Side Duct

CFM	Available External Static																			
	0.2		0.4		0.6		0.8		1.0		1.2		1.4		1.6		1.8		2.0	
	RPM	BHP	RPM	BHP	RPM	BHP	RPM	BHP	RPM	BHP	RPM	BHP	RPM	BHP	RPM	BHP	RPM	BHP	RPM	BHP
2550	571	0.35	624	0.54	679	0.75	734	0.96	789	1.17	843	1.38	894	1.58	943	1.77	987	1.93	1027	2.07
2600	572	0.38	625	0.58	680	0.78	736	0.99	790	1.21	844	1.42	895	1.62	944	1.80	989	1.96	1029	2.10
2800	578	0.53	632	0.72	687	0.93	742	1.14	797	1.35	850	1.56	902	1.76	950	1.95	995	2.11	1035	2.24
3000	586	0.69	639	0.88	694	1.08	749	1.30	804	1.51	858	1.72	909	1.92	958	2.10	1002	2.27	1043	2.40
3200	595	0.86	648	1.05	703	1.25	758	1.46	813	1.68	867	1.89	918	2.09	967	2.27	1012	2.43	1052	2.57
3400	606	1.03	660	1.23	714	1.43	770	1.64	824	1.86	878	2.07	930	2.27	978	2.45	1023	2.61	1063	2.75
3600	619	1.22	673	1.41	728	1.62	783	1.83	838	2.04	891	2.25	943	2.45	991	2.63	1036	2.80	1076	2.93
3800	635	1.41	688	1.60	743	1.81	798	2.02	853	2.23	907	2.44	958	2.64	1007	2.83	1051	2.99	1091	3.13
4000	652	1.61	706	1.80	761	2.01	816	2.22	871	2.43	924	2.64	976	2.84	1024	3.02	1069	3.19	--	--
4200	672	1.81	726	2.00	781	2.21	**836**	**2.42**	891	2.64	944	2.84	996	3.04	1044	3.23	1089	3.39	--	--
4250	678	1.86	731	2.06	786	2.26	**841**	**2.47**	896	2.69	950	2.90	1001	3.10	1050	3.28	1094	3.44	--	--

Standard Static Option with Motor rated at 2.4-hp
Medium Static Option with Motor rated at 2.4-hp
High Static Option with Motor rated at 3.7-hp
Bold Field-supplied AK79 x 1 fixed pulley with Motor rated at 3.7-hp
-- Exceeds recommended blower speed
kW = 0.929 x BHP for Standard & Medium Static options kW = 0.895 x BHP for High Static option

XXE12 (10 Ton) Side Duct

CFM	Available External Static Pressure - IWG																			
	0.2		0.4		0.6		0.8		1.0		1.2		1.4		1.6		1.8		2.0	
	RPM	BHP	RPM	BHP	RPM	BHP	RPM	BHP	RPM	BHP	RPM	BHP	RPM	BHP	RPM	BHP	RPM	BHP	RPM	BHP
3000			665	0.63	707	0.90	750	1.15	795	1.39	842	1.62	888	1.85	935	2.07	980	2.30	1024	2.53
3200			673	0.79	714	1.06	758	1.31	803	1.56	849	1.79	896	2.01	942	2.24	988	2.47	1032	2.70
3400			682	0.97	723	1.24	767	1.50	812	1.74	858	1.97	905	2.20	951	2.42	997	2.65	1041	2.88
3600	654	0.88	692	1.17	733	1.44	777	1.69	822	1.93	868	2.17	915	2.39	961	2.62	1007	2.84	1051	3.08
3800	665	1.10	704	1.38	745	1.65	788	1.91	834	2.15	880	2.38	927	2.61	973	2.83	1018	3.06	1062	3.29
4000	678	1.32	717	1.61	758	1.88	801	2.13	847	2.37	893	2.61	940	2.83	986	3.06	1032	3.28	1076	3.52
4200	693	1.57	731	1.85	772	2.12	816	2.37	861	2.62	907	2.85	954	3.07	1000	3.30	1046	3.53	1090	3.76
4400	709	1.82	747	2.11	788	2.38	832	2.63	877	2.87	923	3.10	970	3.33	1016	3.55	1062	3.78	1106	4.01
4600	726	2.09	764	2.37	806	2.64	849	2.90	894	3.14	941	3.37	987	3.60	1034	3.82	1079	4.05	1123	4.28
4800	745	2.37	**783**	**2.65**	824	2.92	868	3.18	913	3.42	959	3.65	1006	3.88	1052	4.10	1098	4.33	1142	4.56
5000	**765**	**2.66**	803	2.95	844	3.22	888	3.47	933	3.71	979	3.94	1026	4.17	1072	4.39	1118	4.62	1162	4.85

Standard Static Option with Motor rated at 2.4-hp
Medium Static Option with Motor rated at 3.7-hp
Bold Field Supplied AK84 x 1 fixed pulley with Motor rated at 3.7-hp
High Static Option with Motor rated at 5.25-hp
Exceeds recommended blower speed

XQE04-06 Side Duct Application (Belt Drive)

XQE04 (3.0 Ton) Side Duct

CFM	Available External Static																			
	0.2		0.4		0.6		0.8		1.0		1.2		1.4		1.6		1.8		2.0	
	RPM	BHP	RPM	BHP	RPM	BHP	RPM	BHP	RPM	BHP	RPM	BHP	RPM	BHP	RPM	BHP	RPM	BHP	RPM	BHP
900			810	0.27	922	0.38	1024	0.49	1118	0.59	1205	0.69	1285	0.80	1359	0.91	1429	1.03	1496	1.16
1000	**703**	**0.19**	826	0.31	938	0.43	1041	0.53	1135	0.64	1221	0.74	1301	0.85	1376	0.96	1446	1.08	1513	1.21
1100	**721**	**0.25**	843	0.37	956	0.48	1058	0.59	1152	0.69	1239	0.80	1319	0.90	1393	1.01	1463	1.13	1530	1.26
1200	**738**	**0.31**	861	0.43	973	0.54	1076	0.65	1170	0.75	1256	0.86	1336	0.96	1411	1.08	1481	1.19	1548	1.33
1300	**756**	**0.38**	879	0.50	991	0.61	1094	0.72	1188	0.82	1274	0.92	1354	1.03	1429	1.14	1499	1.26	1566	1.39
1400	**774**	**0.45**	897	0.57	1009	0.68	1112	0.79	1206	0.89	1292	1.00	1372	1.10	1447	1.21	1517	1.33	1584	1.47
1500	792	0.53	915	0.65	1027	0.76	1129	0.87	1223	0.97	1310	1.07	1390	1.18	1464	1.29	1535	1.41	**1602**	**1.54**

kW = 0.929 x BHP

Bold	Field-supplied AK51 x 3/4" fixed blower pulley with motor rated at 2.4-hp
	Medium Static Option with Motor rated at 2.4-hp
	High Static Option with Motor rated at 2.4-hp
Bold	Field-supplied AK41 x 3/4" fixed blower pulley with motor rated at 2.4-hp

XQE05 (4.0 Ton) Side Duct

CFM	Available External Static																			
	0.2		0.4		0.6		0.8		1.0		1.2		1.4		1.6		1.8		2.0	
	RPM	BHP	RPM	BHP	RPM	BHP	RPM	BHP	RPM	BHP	RPM	BHP	RPM	BHP	RPM	BHP	RPM	BHP	RPM	BHP
1200	**759**	**0.28**	860	0.38	957	0.49	1050	0.62	1139	0.76	1224	0.89	1306	1.03	1383	1.15	1457	1.26	1527	1.36
1300	**777**	**0.34**	878	0.44	975	0.55	1068	0.68	1157	0.81	1242	0.95	1324	1.08	1401	1.21	1475	1.32	1545	1.42
1400	796	0.40	897	0.50	995	0.61	1088	0.74	1177	0.88	1262	1.01	1343	1.15	1420	1.27	1494	1.38	1564	1.48
1500	816	0.46	918	0.56	1015	0.68	1108	0.81	1197	0.94	1282	1.08	1363	1.21	1440	1.34	1514	1.45	1584	1.54
1600	837	0.53	938	0.63	1035	0.75	1129	0.88	1218	1.01	1303	1.15	1384	1.28	1461	1.41	1535	1.52	**1605**	**1.61**
1700	858	0.61	960	0.71	1057	0.83	1150	0.95	1239	1.09	1324	1.22	1405	1.36	1482	1.48	1556	1.60	**1626**	**1.69**
1800	880	0.69	981	0.79	1078	0.91	1171	1.04	1260	1.17	1345	1.31	1427	1.44	1504	1.57	1578	1.68	**1648**	**1.77**
1900	902	0.78	1003	0.88	1100	1.00	1193	1.12	1282	1.26	1367	1.40	1448	1.53	1526	1.65	1599	1.77	--	--
2000	924	0.88	1025	0.98	1122	1.09	1215	1.22	1304	1.35	1389	1.49	1470	1.62	1548	1.75	**1621**	**1.86**	--	--

kW = 0.929 x BHP

Bold	Field-supplied AK51 x 3/4" fixed blower pulley with motor rated at 2.4-hp
	Medium Static Option with Motor rated at 2.4-hp
	High Static Option with Motor rated at 2.4-hp
Bold	Field-supplied AK41 x 3/4" fixed blower pulley with motor rated at 2.4-hp
--	Exceeds recommended blower speed

XQE06 (5.0 Ton) Side Duct

CFM	Available External Static																			
	0.2		0.4		0.6		0.8		1.0		1.2		1.4		1.6		1.8		2.0	
	RPM	BHP	RPM	BHP	RPM	BHP	RPM	BHP	RPM	BHP	RPM	BHP	RPM	BHP	RPM	BHP	RPM	BHP	RPM	BHP
1500	**770**	**0.40**	836	0.50	901	0.60	964	0.69	1025	0.79	1084	0.89	1142	0.98	1197	1.07	1250	1.15	1300	1.23
1600	**779**	**0.45**	845	0.54	910	0.64	973	0.74	1034	0.83	1093	0.93	1151	1.02	1206	1.11	1259	1.20	1309	1.27
1700	**791**	**0.50**	857	0.60	922	0.69	985	0.79	1046	0.89	1105	0.98	1162	1.07	1218	1.16	1271	1.25	1321	1.33
1800	805	0.56	872	0.66	936	0.75	999	0.85	1060	0.95	1120	1.04	1177	1.13	1232	1.22	1285	1.31	1335	1.39
1900	822	0.63	888	0.72	953	0.82	1016	0.92	1077	1.01	1136	1.11	1194	1.20	1249	1.29	1302	1.38	1352	1.46
2000	841	0.70	907	0.80	972	0.89	1035	0.99	1096	1.09	1155	1.18	1212	1.27	1268	1.36	1321	1.45	1371	1.53
2100	862	0.78	928	0.87	993	0.97	1056	1.07	1117	1.16	1176	1.26	1233	1.35	1289	1.44	1341	1.53	1392	1.61
2200	885	0.86	951	0.96	1016	1.05	1079	1.15	1140	1.25	1199	1.34	1256	1.43	1311	1.52	1364	1.61	1415	1.69
2300	910	0.95	976	1.04	1040	1.14	1103	1.23	1165	1.33	1224	1.43	1281	1.52	1336	1.61	1389	1.69	1440	1.77
2400	936	1.03	1002	1.13	1067	1.23	1130	1.32	1191	1.42	1250	1.52	1307	1.61	1362	1.70	1415	1.78	1466	1.86
2500	964	1.13	1030	1.22	1095	1.32	1158	1.41	1219	1.51	1278	1.61	1335	1.70	1390	1.79	1443	1.87	1494	1.95

kW = 0.857 x BHP

Bold	Field-supplied AK51 x 3/4" fixed blower pulley with motor rated at 2.4-hp
	Medium Static Option with Motor rated at 2.4-hp
	High Static Option with Motor rated at 2.9-hp

XYE04-09 Bottom Duct Application (Belt Drive)

XYE04 (3.0 Ton) Bottom Duct

CFM	Available External Static																			
	0.2		0.4		0.6		0.8		1.0		1.2		1.4		1.6		1.8		2.0	
	RPM	BHP	RPM	BHP	RPM	BHP	RPM	BHP	RPM	BHP	RPM	BHP	RPM	BHP	RPM	BHP	RPM	BHP	RPM	BHP
900	**743**	**0.14**	852	0.26	955	0.37	1050	0.48	1140	0.57	1225	0.67	1306	0.77	1384	0.87	1460	0.98	1535	1.09
1000	**757**	**0.20**	867	0.33	969	0.44	1065	0.54	1155	0.64	1240	0.74	1321	0.84	1399	0.94	1475	1.04	1549	1.16
1100	**774**	**0.27**	884	0.40	986	0.51	1082	0.61	1172	0.71	1257	0.81	1338	0.91	1416	1.01	1492	1.11	1566	1.23
1200	793	0.35	903	0.47	1005	0.58	1101	0.69	1191	0.78	1276	0.88	1357	0.98	1435	1.08	1511	1.19	1585	1.30
1300	814	0.42	924	0.54	1026	0.65	1122	0.76	1212	0.86	1297	0.96	1378	1.05	1456	1.15	1532	1.26	**1606**	**1.37**
1400	837	0.49	947	0.61	1049	0.72	1145	0.83	1235	0.93	1320	1.03	1401	1.12	1479	1.23	1555	1.33	**1629**	**1.45**
1500	862	0.56	972	0.68	1074	0.79	1170	0.90	1260	1.00	1345	1.09	1426	1.19	1504	1.29	1580	1.40	--	--

kW = 0.929 x BHP

Bold	Field-supplied AK51 x 3/4" fixed blower pulley with motor rated at 2.4-hp
	Medium Static Option with Motor rated at 2.4-hp
	High Static Option with Motor rated at 2.4-hp
Bold	Field-supplied AK41 x 3/4" fixed blower pulley with motor rated at 2.4-hp
--	Exceeds recommended blower speed

XYE05 (4.0 Ton) Bottom Duct

CFM	Available External Static																			
	0.2		0.4		0.6		0.8		1.0		1.2		1.4		1.6		1.8		2.0	
	RPM	BHP	RPM	BHP	RPM	BHP	RPM	BHP	RPM	BHP	RPM	BHP	RPM	BHP	RPM	BHP	RPM	BHP	RPM	BHP
1200	801	0.25	903	0.38	999	0.51	1089	0.63	1173	0.76	1252	0.88	1327	1.00	1396	1.11	1461	1.22	1521	1.33
1300	822	0.31	924	0.44	1020	0.57	1110	0.69	1194	0.82	1273	0.94	1348	1.06	1417	1.17	1482	1.28	1542	1.39
1400	844	0.38	946	0.51	1042	0.64	1132	0.76	1216	0.89	1295	1.01	1370	1.13	1439	1.24	1504	1.35	1564	1.46
1500	867	0.46	969	0.59	1065	0.71	1155	0.84	1239	0.96	1319	1.08	1393	1.20	1462	1.32	1527	1.43	1587	1.53
1600	891	0.54	993	0.67	1089	0.79	1179	0.92	1264	1.04	1343	1.16	1417	1.28	1486	1.40	1551	1.51	**1612**	**1.61**
1700	917	0.63	1019	0.75	1115	0.88	1205	1.01	1289	1.13	1368	1.25	1442	1.37	1512	1.48	1577	1.60	**1637**	**1.70**
1800	943	0.72	1045	0.85	1141	0.97	1231	1.10	1316	1.22	1395	1.34	1469	1.46	1538	1.58	**1603**	**1.69**	--	--
1900	971	0.81	1073	0.94	1169	1.07	1259	1.19	1344	1.32	1423	1.44	1497	1.56	1566	1.67	**1631**	**1.78**	--	--
2000	1000	0.92	1102	1.04	1198	1.17	1288	1.29	1372	1.42	1452	1.54	1526	1.66	1595	1.77	--	--	--	--

kW = 0.929 x BHP

	Medium Static Option with Motor rated at 2.4-hp
	High Static Option with Motor rated at 2.4-hp
Bold	Field-supplied AK41 x 3/4" fixed blower pulley with motor rated at 2.4-hp
--	Exceeds recommended blower speed

XYE06 (5.0 Ton) Bottom Duct

CFM	Available External Static																			
	0.2		0.4		0.6		0.8		1.0		1.2		1.4		1.6		1.8		2.0	
	RPM	BHP	RPM	BHP	RPM	BHP	RPM	BHP	RPM	BHP	RPM	BHP	RPM	BHP	RPM	BHP	RPM	BHP	RPM	BHP
1500	812	0.36	869	0.46	931	0.55	997	0.64	1063	0.74	1129	0.84	1193	0.94	1253	1.05	1307	1.16	1354	1.27
1600	829	0.43	886	0.52	948	0.61	1013	0.71	1080	0.80	1146	0.90	1210	1.01	1270	1.11	1324	1.22	1370	1.34
1700	846	0.50	904	0.59	966	0.68	1031	0.78	1097	0.87	1164	0.97	1227	1.07	1287	1.18	1341	1.29	1388	1.41
1800	865	0.57	922	0.66	985	0.75	1050	0.85	1116	0.95	1182	1.05	1246	1.15	1306	1.25	1360	1.36	1407	1.48
1900	885	0.65	943	0.74	1005	0.83	1070	0.93	1136	1.02	1203	1.12	1266	1.23	1326	1.33	1380	1.44	1427	1.56
2000	907	0.73	964	0.82	1026	0.92	1092	1.01	1158	1.11	1224	1.21	1288	1.31	1348	1.42	1402	1.53	1449	1.64
2100	930	0.82	987	0.91	1049	1.01	1115	1.10	1181	1.20	1247	1.30	1311	1.40	1371	1.51	1425	1.62	1472	1.73
2200	955	0.92	1012	1.01	1074	1.10	1139	1.20	1206	1.29	1272	1.39	1336	1.50	1396	1.60	1450	1.71	1496	1.83
2300	981	1.02	1038	1.11	1101	1.20	1166	1.30	1232	1.39	1298	1.49	1362	1.60	1422	1.70	1476	1.81	1523	1.93
2400	1009	1.12	1066	1.22	1128	1.31	1194	1.40	1260	1.50	1326	1.60	1390	1.70	1450	1.81	1504	1.92	1551	2.03
2500	1038	1.24	1096	1.33	1158	1.42	1223	1.52	1290	1.61	1356	1.71	1420	1.82	1480	1.92	1534	2.03	1580	2.15

kW = 0.857 x BHP

	Medium Static Option with Motor rated at 2.4-hp
	High Static Option with Motor rated at 2.9-hp

XYE07 (6.0 Ton) Bottom Duct

CFM	Available External Static																			
	0.20		0.40		0.60		0.80		1.00		1.20		1.40		1.60		1.80		2.00	
	RPMs	BHP	RPMs	BHP	RPMs	BHP	RPMs	BHP	RPMs	BHP	RPMs	BHP	RPMs	BHP	RPMs	BHP	RPMs	BHP	RPMs	BHP
1800	517	0.35	592	0.51	661	0.67	723	0.83	779	0.99	832	1.15	881	1.30	927	1.43	973	1.56	1017	1.66
1900	526	0.39	601	0.55	670	0.71	732	0.87	789	1.03	841	1.19	890	1.34	937	1.48	982	1.60	1026	1.71
2000	535	0.44	611	0.60	679	0.76	741	0.92	798	1.08	850	1.24	899	1.39	946	1.52	991	1.65	1036	1.76
2100	544	0.49	620	0.65	688	0.81	750	0.97	807	1.13	859	1.29	908	1.44	955	1.57	1000	1.70	1045	1.80
2200	554	0.54	629	0.70	698	0.86	760	1.02	816	1.18	869	1.34	918	1.49	964	1.63	1010	1.75	1054	1.86
2300	563	0.60	639	0.76	707	0.92	769	1.08	826	1.24	878	1.40	927	1.55	974	1.68	1019	1.81	1064	1.91
2400	573	0.66	649	0.82	717	0.98	779	1.14	836	1.30	888	1.46	937	1.61	984	1.74	1029	1.87	1074	1.98
2500	583	0.73	658	0.88	727	1.04	789	1.20	846	1.37	898	1.52	947	1.67	994	1.81	1039	1.93	1084	2.04
2600	593	0.79	669	0.95	737	1.11	799	1.27	856	1.43	908	1.59	957	1.74	1004	1.88	1049	2.00	1094	2.11
2700	603	0.87	679	1.02	747	1.18	809	1.35	866	1.51	919	1.66	968	1.81	1014	1.95	1059	2.07	-	-
2800	614	0.94	690	1.10	758	1.26	820	1.42	877	1.58	929	1.74	978	1.89	1025	2.03	1070	2.15	-	-
2900	625	1.02	701	1.18	769	1.34	831	1.50	888	1.66	940	1.82	989	1.97	1036	2.11	1081	2.23	-	-
3000	636	1.11	712	1.27	780	1.43	842	1.59	899	1.75	951	1.91	1000	2.05	1047	2.19	1092	2.32	-	-

Standard Static Option with Motor rated at 2.4-Max Bhp
Medium Static Option with Motor rated at 2.9-Max Bhp
High Static Option with Motor rated at 3.7-Max Bhp
-- Exceeds recommended blower speed
kW = 0.929 x BHP for Standard & Medium Static options kW = 0.895 x BHP for High Static option

XYEA7 (6.0 Ton) Bottom Duct

CFM	Available External Static																			
	0.20		0.40		0.60		0.80		1.00		1.20		1.40		1.60		1.80		2.00	
	RPMs	BHP	RPMs	BHP	RPMs	BHP	RPMs	BHP	RPMs	BHP	RPMs	BHP	RPMs	BHP	RPMs	BHP	RPMs	BHP	RPMs	BHP
1800	517	0.35	592	0.51	661	0.67	723	0.83	779	0.99	832	1.15	881	1.30	927	1.43	973	1.56	1017	1.66
1900	526	0.39	601	0.55	670	0.71	732	0.87	789	1.03	841	1.19	890	1.34	937	1.48	982	1.60	1026	1.71
2000	535	0.44	611	0.60	679	0.76	741	0.92	798	1.08	850	1.24	899	1.39	946	1.52	991	1.65	1036	1.76
2100	544	0.49	620	0.65	688	0.81	750	0.97	807	1.13	859	1.29	908	1.44	955	1.57	1000	1.70	1045	1.80
2200	554	0.54	629	0.70	698	0.86	760	1.02	816	1.18	869	1.34	918	1.49	964	1.63	1010	1.75	1054	1.86
2300	563	0.60	639	0.76	707	0.92	769	1.08	826	1.24	878	1.40	927	1.55	974	1.68	1019	1.81	1064	1.91
2400	573	0.66	649	0.82	717	0.98	779	1.14	836	1.30	888	1.46	937	1.61	984	1.74	1029	1.87	1074	1.98
2500	583	0.73	658	0.88	727	1.04	789	1.20	846	1.37	898	1.52	947	1.67	994	1.81	1039	1.93	1084	2.04
2600	593	0.79	669	0.95	737	1.11	799	1.27	856	1.43	908	1.59	957	1.74	1004	1.88	1049	2.00	1094	2.11
2700	603	0.87	679	1.02	747	1.18	809	1.35	866	1.51	919	1.66	968	1.81	1014	1.95	1059	2.07	-	-
2800	614	0.94	690	1.10	758	1.26	820	1.42	877	1.58	929	1.74	978	1.89	1025	2.03	1070	2.15	-	-
2900	625	1.02	701	1.18	769	1.34	831	1.50	888	1.66	940	1.82	989	1.97	1036	2.11	1081	2.23	-	-
3000	636	1.11	712	1.27	780	1.43	842	1.59	899	1.75	951	1.91	1000	2.05	1047	2.19	1092	2.32	-	-

Standard Static Option with Motor rated at 2.4-Max Bhp
Medium Static Option with Motor rated at 2.9-Max Bhp
High Static Option with Motor rated at 3.7-Max Bhp
-- Exceeds recommended blower speed
kW = 0.929 x BHP for Standard & Medium Static options kW = 0.895 x BHP for High Static option

XYE08 (7.5 Ton) Bottom Duct

CFM	Available External Static																			
	0.2		0.4		0.6		0.8		1.0		1.2		1.4		1.6		1.8		2.0	
	RPM	BHP	RPM	BHP	RPM	BHP	RPM	BHP	RPM	BHP	RPM	BHP	RPM	BHP	RPM	BHP	RPM	BHP	RPM	BHP
2250	552	0.25	614	0.43	674	0.63	733	0.83	789	1.02	844	1.22	898	1.41	950	1.58	1000	1.75	1049	1.89
2400	559	0.34	621	0.52	682	0.72	740	0.91	797	1.11	852	1.31	905	1.49	957	1.67	1007	1.83	1056	1.98
2600	569	0.47	631	0.65	691	0.85	750	1.04	806	1.24	861	1.44	915	1.62	967	1.80	1017	1.96	1066	2.11
2800	579	0.61	641	0.79	701	0.99	760	1.19	817	1.38	872	1.58	925	1.77	977	1.94	1027	2.11	1076	2.25
3000	590	0.76	652	0.95	713	1.14	771	1.34	828	1.54	883	1.73	936	1.92	988	2.10	1038	2.26	1087	2.40
3200	602	0.92	665	1.11	725	1.30	783	1.50	840	1.70	895	1.89	948	2.08	1000	2.26	1050	2.42	1099	2.57
3400	616	1.09	678	1.28	738	1.47	797	1.67	854	1.87	909	2.06	962	2.25	1014	2.43	1064	2.59	--	--
3600	631	1.27	693	1.45	754	1.65	812	1.85	869	2.04	924	2.24	977	2.43	1029	2.60	1079	2.77	--	--
3750	644	1.40	706	1.59	766	1.78	824	1.98	881	2.18	936	2.37	990	2.56	1041	2.74	1092	2.90	--	--

Standard Static Option with Motor rated at 2.4-hp
Medium Static Option with Motor rated at 2.4-hp
High Static Option with Motor rated at 3.7-hp
-- Exceeds recommended blower speed
kW = 0.929 x BHP for Standard & Medium Static options kW = 0.895 x BHP for High Static option

XYE09 (8.5 Ton) Bottom Duct

CFM	Available External Static																			
	0.2		0.4		0.6		0.8		1.0		1.2		1.4		1.6		1.8		2.0	
	RPM	BHP	RPM	BHP	RPM	BHP	RPM	BHP	RPM	BHP	RPM	BHP	RPM	BHP	RPM	BHP	RPM	BHP	RPM	BHP
2550	567	0.43	629	0.62	689	0.81	747	1.01	804	1.21	859	1.40	912	1.59	964	1.77	1014	1.93	1063	2.07
2600	569	0.47	631	0.65	691	0.85	750	1.04	806	1.24	861	1.44	915	1.62	967	1.80	1017	1.96	1066	2.11
2800	579	0.61	641	0.79	701	0.99	760	1.19	817	1.38	872	1.58	925	1.77	977	1.94	1027	2.11	1076	2.25
3000	590	0.76	652	0.95	713	1.14	771	1.34	828	1.54	883	1.73	936	1.92	988	2.10	1038	2.26	1087	2.40
3200	602	0.92	665	1.11	725	1.30	783	1.50	840	1.70	895	1.89	948	2.08	1000	2.26	1050	2.42	1099	2.57
3400	616	1.09	678	1.28	738	1.47	797	1.67	854	1.87	909	2.06	962	2.25	1014	2.43	1064	2.59	--	--
3600	631	1.27	693	1.45	754	1.65	812	1.85	869	2.04	924	2.24	977	2.43	1029	2.60	1079	2.77	--	--
3800	648	1.45	710	1.64	770	1.83	829	2.03	885	2.23	940	2.42	994	2.61	1046	2.78	1096	2.95	--	--
4000	666	1.64	729	1.82	789	2.01	847	2.21	904	2.41	959	2.61	1012	2.79	1064	2.97	--	--	--	--
4200	687	1.82	749	2.01	809	2.20	867	2.42	924	2.60	979	2.79	1032	2.98	1084	3.16	--	--	--	--
4250	692	1.87	754	2.06	814	2.25	873	2.45	929	2.65	984	2.84	1038	3.03	1090	3.21	--	--	--	--

Standard Static Option with Motor rated at 2.4-hp
Medium Static Option with Motor rated at 2.4-hp
High Static Option with Motor rated at 3.7-hp
-- Exceeds recommended blower speed

kW = 0.929 x BHP for Standard & Medium Static options kW = 0.895 x BHP for High Static option

XXEA7-12 Bottom Duct Application (Belt Drive)

XXEA7 (6.0 Ton) Bottom Duct

CFM	Available External Static Pressure - IWG																			
	0.2		0.4		0.6		0.8		1.0		1.2		1.4		1.6		1.8		2.0	
	RPM	BHP	RPM	BHP	RPM	BHP	RPM	BHP	RPM	BHP	RPM	BHP	RPM	BHP	RPM	BHP	RPM	BHP	RPM	BHP
1800	843	0.55	911	0.66	975	0.79	1035	0.93	1092	1.07	1148	1.21	1203	1.36	1258	1.49	1316	1.62	1376	1.74
1900	870	0.62	939	0.74	1003	0.86	1063	1.00	1120	1.14	1175	1.29	1230	1.43	1286	1.56	1343	1.69	1404	1.81
2000	898	0.70	967	0.82	1031	0.95	1090	1.08	1147	1.22	1203	1.37	1258	1.51	1314	1.64	1371	1.77	1432	1.89
2100	926	0.79	995	0.91	1059	1.04	1119	1.17	1176	1.31	1231	1.46	1286	1.60	1342	1.73	1399	1.86	1460	1.98
2200	955	0.89	1023	1.01	1087	1.14	1147	1.27	1204	1.41	1260	1.56	1315	1.70	1370	1.83	1428	1.96	1488	2.08
2300	983	1.00	1052	1.12	1116	1.24	1176	1.38	1233	1.52	1288	1.67	1343	1.81	1399	1.94	1456	2.07	1517	2.19
2400	1012	1.12	1081	1.23	1145	1.36	1205	1.50	1262	1.64	1317	1.79	1372	1.93	1428	2.06	1485	2.19	1546	2.31
2500	1041	1.25	1110	1.36	1173	1.49	1233	1.63	1290	1.77	1346	1.91	1401	2.06	1457	2.19	1514	2.32	1574	2.44
2600	1070	1.38	1139	1.50	1202	1.63	1262	1.77	1319	1.91	1375	2.05	1430	2.19	1485	2.33	1543	2.46	1603	2.57
2700	1098	1.53	1167	1.65	1231	1.78	1291	1.91	1348	2.06	1404	2.20	1459	2.34	1514	2.48	1572	2.60	1632	2.72
2800	1127	1.69	1196	1.80	1260	1.93	1320	2.07	1377	2.21	1432	2.36	1487	2.50	1543	2.63	1600	2.76	-	-
2900	1156	1.85	1225	1.97	1289	2.10	1348	2.24	1406	2.38	1461	2.52	1516	2.66	1572	2.80	1629	2.93	-	-
3000	1184	2.03	1253	2.14	1317	2.27	1377	2.41	1434	2.55	1490	2.69	1545	2.84	1600	2.97	1658	3.10	-	-

Standard Static Option with Motor rated at 2.4-hp
Medium Static Option with Motor rated at 2.9-hp
High Static Option with Motor rated at 3.7-hp
-- Exceeds recommended blower speed

Note: See RPM SELECTION table to determine desired motor sheave setting and to determine the maximum continuous BHP.
kW = 0.929 x BHP

XXE08 (7.5 Ton) Bottom Duct

CFM	Available External Static																			
	0.2		0.4		0.6		0.8		1.0		1.2		1.4		1.6		1.8		2.0	
	RPM	BHP	RPM	BHP	RPM	BHP	RPM	BHP	RPM	BHP	RPM	BHP	RPM	BHP	RPM	BHP	RPM	BHP	RPM	BHP
2250	552	0.25	614	0.43	674	0.63	733	0.83	789	1.02	844	1.22	898	1.41	950	1.58	1000	1.75	1049	1.89
2400	559	0.34	621	0.52	682	0.72	740	0.91	797	1.11	852	1.31	905	1.49	957	1.67	1007	1.83	1056	1.98
2600	569	0.47	631	0.65	691	0.85	750	1.04	806	1.24	861	1.44	915	1.62	967	1.80	1017	1.96	1066	2.11
2800	579	0.61	641	0.79	701	0.99	760	1.19	817	1.38	872	1.58	925	1.77	977	1.94	1027	2.11	1076	2.25
3000	590	0.76	652	0.95	713	1.14	771	1.34	828	1.54	883	1.73	936	1.92	988	2.10	1038	2.26	1087	2.40
3200	602	0.92	665	1.11	725	1.30	783	1.50	840	1.70	895	1.89	948	2.08	1000	2.26	1050	2.42	1099	2.57
3400	616	1.09	678	1.28	738	1.47	797	1.67	854	1.87	909	2.06	962	2.25	1014	2.43	1064	2.59	--	--
3600	631	1.27	693	1.45	754	1.65	812	1.85	869	2.04	924	2.24	977	2.43	1029	2.60	1079	2.77	--	--
3750	644	1.40	706	1.59	766	1.78	824	1.98	881	2.18	936	2.37	990	2.56	1041	2.74	1092	2.90	--	--

Standard Static Option with Motor rated at 2.4-hp
Medium Static Option with Motor rated at 2.4-hp
High Static Option with Motor rated at 3.7-hp
-- Exceeds recommended blower speed

kW = 0.929 x BHP for Standard & Medium Static options kW = 0.895 x BHP for High Static option

XXE09 (8.5 Ton) Bottom Duct

CFM	Available External Static																			
	0.2		0.4		0.6		0.8		1.0		1.2		1.4		1.6		1.8		2.0	
	RPM	BHP	RPM	BHP	RPM	BHP	RPM	BHP	RPM	BHP	RPM	BHP	RPM	BHP	RPM	BHP	RPM	BHP	RPM	BHP
2550	567	0.43	629	0.62	689	0.81	747	1.01	804	1.21	859	1.40	912	1.59	964	1.77	1014	1.93	1063	2.07
2600	569	0.47	631	0.65	691	0.85	750	1.04	806	1.24	861	1.44	915	1.62	967	1.80	1017	1.96	1066	2.11
2800	579	0.61	641	0.79	701	0.99	760	1.19	817	1.38	872	1.58	925	1.77	977	1.94	1027	2.11	1076	2.25
3000	590	0.76	652	0.95	713	1.14	771	1.34	828	1.54	883	1.73	936	1.92	988	2.10	1038	2.26	1087	2.40
3200	602	0.92	665	1.11	725	1.30	783	1.50	840	1.70	895	1.89	948	2.08	1000	2.26	1050	2.42	1099	2.57
3400	616	1.09	678	1.28	738	1.47	797	1.67	854	1.87	909	2.06	962	2.25	1014	2.43	1064	2.59	--	--
3600	631	1.27	693	1.45	754	1.65	812	1.85	869	2.04	924	2.24	977	2.43	1029	2.60	1079	2.77	--	--
3800	648	1.45	710	1.64	770	1.83	829	2.03	885	2.23	940	2.42	994	2.61	1046	2.78	1096	2.95	--	--
4000	666	1.64	729	1.82	789	2.01	847	2.21	904	2.41	959	2.61	1012	2.79	1064	2.97	--	--	--	--
4200	687	1.82	749	2.01	809	2.20	867	2.42	924	2.60	979	2.79	1032	2.98	1084	3.16	--	--	--	--
4250	692	1.87	754	2.06	814	2.25	873	2.45	929	2.65	984	2.84	1038	3.03	1090	3.21	--	--	--	--

Standard Static Option with Motor rated at 2.4-hp
Medium Static Option with Motor rated at 2.4-hp
High Static Option with Motor rated at 3.7-hp
-- Exceeds recommended blower speed
kW = 0.929 x BHP for Standard & Medium Static options kW = 0.895 x BHP for High Static option

XXE12 (10 Ton) Bottom Duct

CFM	Available External Static Pressure - IWG																			
	0.2		0.4		0.6		0.8		1.0		1.2		1.4		1.6		1.8		2.0	
	RPM	BHP	RPM	BHP	RPM	BHP	RPM	BHP	RPM	BHP	RPM	BHP	RPM	BHP	RPM	BHP	RPM	BHP	RPM	BHP
3000			665	0.84	715	1.05	763	1.25	809	1.45	855	1.64	901	1.84	947	2.04	995	2.26	1045	2.48
3200			675	1.01	726	1.22	774	1.42	820	1.61	866	1.81	911	2.01	958	2.21	1005	2.42	1055	2.65
3400			687	1.19	737	1.40	785	1.60	832	1.80	878	1.99	923	2.19	970	2.40	1017	2.61	1067	2.83
3600			700	1.39	750	1.60	798	1.80	845	2.00	891	2.20	936	2.39	983	2.60	1030	2.81	1080	3.04
3800	662	1.39	715	1.61	765	1.82	813	2.02	859	2.22	905	2.41	951	2.61	997	2.81	1045	3.03	1094	3.25
4000	677	1.62	730	1.84	780	2.05	828	2.26	875	2.45	921	2.65	966	2.85	1013	3.05	1060	3.26	1110	3.49
4200	694	1.87	747	2.09	797	2.30	845	2.50	892	2.70	937	2.90	983	3.09	1029	3.30	1077	3.51	1127	3.74
4400	712	2.13	765	2.35	815	2.57	863	2.77	910	2.96	956	3.16	1001	3.36	1048	3.56	1095	3.77	1145	4.00
4600	732	2.41	**785**	**2.63**	835	2.84	883	3.04	929	3.24	975	3.44	1021	3.63	1067	3.84	1115	4.05	1165	4.28
4800	**752**	**2.70**	805	2.92	856	3.13	904	3.33	950	3.53	996	3.73	1041	3.92	1088	4.13	1135	4.34	-	-
5000	**774**	**3.00**	827	3.22	878	3.43	925	3.64	972	3.83	1018	4.03	1063	4.23	1110	4.43	1157	4.64	-	-

Standard Static Option with Motor rated at 2.4-hp
Medium Static Option with Motor rated at 3.7-hp
Bold Field Supplied AK84 x 1 fixed pulley with Motor rated at 3.7-hp
High Static Option with Motor rated at 5.25-hp
-- Exceeds recommended blower speed

XQE04-09 Bottom Duct Application (Belt Drive)

XQE04 (3.0 Ton) Bottom Duct

CFM	Available External Static																			
	0.2		0.4		0.6		0.8		1.0		1.2		1.4		1.6		1.8		2.0	
	RPM	BHP	RPM	BHP	RPM	BHP	RPM	BHP	RPM	BHP	RPM	BHP	RPM	BHP	RPM	BHP	RPM	BHP	RPM	BHP
900	**743**	**0.14**	852	0.26	955	0.37	1050	0.48	1140	0.57	1225	0.67	1306	0.77	1384	0.87	1460	0.98	1535	1.09
1000	**757**	**0.20**	867	0.33	969	0.44	1065	0.54	1155	0.64	1240	0.74	1321	0.84	1399	0.94	1475	1.04	1549	1.16
1100	**774**	**0.27**	884	0.40	986	0.51	1082	0.61	1172	0.71	1257	0.81	1338	0.91	1416	1.01	1492	1.11	1566	1.23
1200	793	0.35	903	0.47	1005	0.58	1101	0.69	1191	0.78	1276	0.88	1357	0.98	1435	1.08	1511	1.19	1585	1.30
1300	814	0.42	924	0.54	1026	0.65	1122	0.76	1212	0.86	1297	0.96	1378	1.05	1456	1.15	1532	1.26	**1606**	**1.37**
1400	837	0.49	947	0.61	1049	0.72	1145	0.83	1235	0.93	1320	1.03	1401	1.12	1479	1.23	1555	1.33	**1629**	**1.45**
1500	862	0.56	972	0.68	1074	0.79	1170	0.90	1260	1.00	1345	1.09	1426	1.19	1504	1.29	1580	1.40	--	--

kW = 0.929 x BHP

Bold	Field-supplied AK51 x 3/4" fixed blower pulley with motor rated at 2.4-hp
	Medium Static Option with Motor rated at 2.4-hp
	High Static Option with Motor rated at 2.4-hp
Bold	Field-supplied AK41 x 3/4" fixed blower pulley with motor rated at 2.4-hp
--	Exceeds recommended blower speed

XQE05 (4.0 Ton) Bottom Duct

CFM	Available External Static																			
	0.2		0.4		0.6		0.8		1.0		1.2		1.4		1.6		1.8		2.0	
	RPM	BHP	RPM	BHP	RPM	BHP	RPM	BHP	RPM	BHP	RPM	BHP	RPM	BHP	RPM	BHP	RPM	BHP	RPM	BHP
1200	801	0.25	903	0.38	999	0.51	1089	0.63	1173	0.76	1252	0.88	1327	1.00	1396	1.11	1461	1.22	1521	1.33
1300	822	0.31	924	0.44	1020	0.57	1110	0.69	1194	0.82	1273	0.94	1348	1.06	1417	1.17	1482	1.28	1542	1.39
1400	844	0.38	946	0.51	1042	0.64	1132	0.76	1216	0.89	1295	1.01	1370	1.13	1439	1.24	1504	1.35	1564	1.46
1500	867	0.46	969	0.59	1065	0.71	1155	0.84	1239	0.96	1319	1.08	1393	1.20	1462	1.32	1527	1.43	1587	1.53
1600	891	0.54	993	0.67	1089	0.79	1179	0.92	1264	1.04	1343	1.16	1417	1.28	1486	1.40	1551	1.51	**1612**	**1.61**
1700	917	0.63	1019	0.75	1115	0.88	1205	1.01	1289	1.13	1368	1.25	1442	1.37	1512	1.48	1577	1.60	**1637**	**1.70**
1800	943	0.72	1045	0.85	1141	0.97	1231	1.10	1316	1.22	1395	1.34	1469	1.46	1538	1.58	**1603**	**1.69**	--	--
1900	971	0.81	1073	0.94	1169	1.07	1259	1.19	1344	1.32	1423	1.44	1497	1.56	1566	1.67	**1631**	**1.78**	--	--
2000	1000	0.92	1102	1.04	1198	1.17	1288	1.29	1372	1.42	1452	1.54	1526	1.66	1595	1.77	--	--	--	--

kW = 0.929 x BHP

	Medium Static Option with Motor rated at 2.4-hp
	High Static Option with Motor rated at 2.4-hp
Bold	Field-supplied AK41 x 3/4" fixed blower pulley with motor rated at 2.4-hp
--	Exceeds recommended blower speed

XQE06 (5.0 Ton) Bottom Duct

CFM	Available External Static																			
	0.2		0.4		0.6		0.8		1.0		1.2		1.4		1.6		1.8		2.0	
	RPM	BHP	RPM	BHP	RPM	BHP	RPM	BHP	RPM	BHP	RPM	BHP	RPM	BHP	RPM	BHP	RPM	BHP	RPM	BHP
1500	812	0.36	869	0.46	931	0.55	997	0.64	1063	0.74	1129	0.84	1193	0.94	1253	1.05	1307	1.16	1354	1.27
1600	829	0.43	886	0.52	948	0.61	1013	0.71	1080	0.80	1146	0.90	1210	1.01	1270	1.11	1324	1.22	1370	1.34
1700	846	0.50	904	0.59	966	0.68	1031	0.78	1097	0.87	1164	0.97	1227	1.07	1287	1.18	1341	1.29	1388	1.41
1800	865	0.57	922	0.66	985	0.75	1050	0.85	1116	0.95	1182	1.05	1246	1.15	1306	1.25	1360	1.36	1407	1.48
1900	885	0.65	943	0.74	1005	0.83	1070	0.93	1136	1.02	1203	1.12	1266	1.23	1326	1.33	1380	1.44	1427	1.56
2000	907	0.73	964	0.82	1026	0.92	1092	1.01	1158	1.11	1224	1.21	1288	1.31	1348	1.42	1402	1.53	1449	1.64
2100	930	0.82	987	0.91	1049	1.01	1115	1.10	1181	1.20	1247	1.30	1311	1.40	1371	1.51	1425	1.62	1472	1.73
2200	955	0.92	1012	1.01	1074	1.10	1139	1.20	1206	1.29	1272	1.39	1336	1.50	1396	1.60	1450	1.71	1496	1.83
2300	981	1.02	1038	1.11	1101	1.20	1166	1.30	1232	1.39	1298	1.49	1362	1.60	1422	1.70	1476	1.81	1523	1.93
2400	1009	1.12	1066	1.22	1128	1.31	1194	1.40	1260	1.50	1326	1.60	1390	1.70	1450	1.81	1504	1.92	1551	2.03
2500	1038	1.24	1096	1.33	1158	1.42	1223	1.52	1290	1.61	1356	1.71	1420	1.82	1480	1.92	1534	2.03	1580	2.15

kW = 0.857 x BHP

	Medium Static Option with Motor rated at 2.4-hp
	High Static Option with Motor rated at 2.9-hp

XYE04-06 Side Duct Application (Direct Drive)

XYE04-06 Side Duct

Unit (Ton)	Motor Speed	Available External Static														
		0.2			0.4			0.6			0.8			1.0		
		CFM	WATTS	RPM	CFM	WATTS	RPM	CFM	WATTS	RPM	CFM	WATTS	RPM	CFM	WATTS	RPM
XYE04 (3)	1 (LOW)	987	120	651	813	145	774	698	162	864	541	180	959	383	201	1047
	2 (MED/LOW)	1079	144	677	936	171	795	793	190	886	692	214	975	521	232	1063
	3 (MED)	1153	166	701	1037	195	812	875	221	913	786	239	986	654	263	1076
	4 (MED/HI)	1191	178	712	1086	206	815	927	233	916	837	257	998	711	278	1083
	5 (HI)	1326	229	757	1235	261	856	1124	291	951	973	319	1035	896	336	1099
XYE05 (4)	1 (LOW)	1302	207	727	1188	240	841	1037	266	933	941	296	1022	882	318	1098
	2 (MED/LOW)	1421	247	757	1323	282	861	1209	315	958	1064	346	1043	993	368	1116
	3 (MED)	1538	297	795	1453	332	888	1343	367	982	1216	396	1058	1093	427	1146
	4 (MED/HI)	1571	315	809	1496	352	898	1385	389	996	1288	420	1072	1135	444	1147
	5 (HI)	1779	432	878	1707	470	960	1615	511	1042	1516	544	1123	1165	468	1160
XYE06 (5)	1 (LOW)	1588	298	695	1517	330	761	1409	358	835	1273	393	913	1167	418	973
	2 (MED/LOW)	1624	321	713	1557	352	777	1464	383	845	1315	418	924	1224	446	983
	3 (MED)	1942	504	792	1881	536	852	1800	565	908	1714	605	969	1611	644	1038
	4 (MED/HI)	2146	631	840	2064	692	908	2001	713	954	1932	757	1007	1843	794	1065
	5 (HI)	2316	812	892	2240	861	954	2181	894	1000	2113	938	1045	2003	946	1093

XYE04-06 Bottom Duct Application (Direct Drive)

XYE04-06 Bottom Duct

Unit (Ton)	Motor Speed	Available External Static														
		0.2			0.4			0.6			0.8			1.0		
		CFM	WATTS	RPM	CFM	WATTS	RPM	CFM	WATTS	RPM	CFM	WATTS	RPM	CFM	WATTS	RPM
XYE04 (3)	1 (LOW)	929	128	699	782	148	794	663	164	880	514	187	976	377	202	1053
	2 (MED/LOW)	1036	157	732	870	177	827	803	198	905	649	217	996	508	236	1074
	3 (MED)	1106	181	760	956	204	849	878	225	928	755	245	1010	616	266	1092
	4 (MED/HI)	1147	197	776	1042	218	860	916	243	944	820	262	1017	671	286	1103
	5 (HI)	1272	252	830	1177	277	909	1037	304	986	975	323	1053	872	347	1125
XYE05 (4)	1 (LOW)	1256	220	776	1170	242	851	1077	266	931	988	298	1025	872	321	1113
	2 (MED/LOW)	1350	272	828	1279	292	893	1196	320	966	1105	347	1048	1003	372	1131
	3 (MED)	1449	323	866	1380	350	937	1303	370	996	1223	402	1071	1133	428	1149
	4 (MED/HI)	1488	345	882	1418	374	954	1357	394	1006	1264	424	1083	1160	442	1155
	5 (HI)	1677	471	966	1602	507	1034	1543	525	1083	1475	545	1131	1209	465	1162
XYE06 (5)	1 (LOW)	1548	310	720	1441	336	792	1337	370	864	1213	397	928	1097	421	988
	2 (MED/LOW)	1593	337	738	1488	363	805	1381	394	875	1271	425	937	1150	451	997
	3 (MED)	1880	532	827	1792	563	890	1719	588	944	1632	629	1006	1527	652	1061
	4 (MED/HI)	2066	689	895	1999	712	942	1907	761	999	1830	773	1048	1734	809	1100
	5 (HI)	2237	862	949	2163	882	996	2097	929	1036	1998	946	1085	1815	883	1115

XQE04-06 Side Duct Application (Direct Drive)

XQE04-06 Side Duct

Unit (Ton)	Motor Speed	Available External Static														
		0.2			0.4			0.6			0.8			1.0		
		CFM	WATTS	RPM	CFM	WATTS	RPM	CFM	WATTS	RPM	CFM	WATTS	RPM	CFM	WATTS	RPM
XYE04 (3)	1 (LOW)	987	120	651	813	145	774	698	162	864	541	180	959	383	201	1047
	2 (MED/LOW)	1079	144	677	936	171	795	793	190	886	692	214	975	521	232	1063
	3 (MED)	1153	166	701	1037	195	812	875	221	913	786	239	986	654	263	1076
	4 (MED/HI)	1191	178	712	1086	206	815	927	233	916	837	257	998	711	278	1083
	5 (HI)	1326	229	757	1235	261	856	1124	291	951	973	319	1035	896	336	1099
XYE05 (4)	1 (LOW)	1302	207	727	1188	240	841	1037	266	933	941	296	1022	882	318	1098
	2 (MED/LOW)	1421	247	757	1323	282	861	1209	315	958	1064	346	1043	993	368	1116
	3 (MED)	1538	297	795	1453	332	888	1343	367	982	1216	396	1058	1093	427	1146
	4 (MED/HI)	1571	315	809	1496	352	898	1385	389	996	1288	420	1072	1135	444	1147
	5 (HI)	1779	432	878	1707	470	960	1615	511	1042	1516	544	1123	1165	468	1160
XYE06 (5)	1 (LOW)	1588	298	695	1517	330	761	1409	358	835	1273	393	913	1167	418	973
	2 (MED/LOW)	1624	321	713	1557	352	777	1464	383	845	1315	418	924	1224	446	983
	3 (MED)	1942	504	792	1881	536	852	1800	565	908	1714	605	969	1611	644	1038
	4 (MED/HI)	2146	631	840	2064	692	908	2001	713	954	1932	757	1007	1843	794	1065
	5 (HI)	2316	812	892	2240	861	954	2181	894	1000	2113	938	1045	2003	946	1093

XQE04-06 Bottom Duct Application (Direct Drive)

XQE04-06 Bottom Duct

Unit (Ton)	Motor Speed	Available External Static														
		0.2			0.4			0.6			0.8			1.0		
		CFM	WATTS	RPM	CFM	WATTS	RPM	CFM	WATTS	RPM	CFM	WATTS	RPM	CFM	WATTS	RPM
XQE04 (3)	1 (LOW)	929	128	699	782	148	794	663	164	880	514	187	976	377	202	1053
	2 (MED/LOW)	1036	157	732	870	177	827	803	198	905	649	217	996	508	236	1074
	3 (MED)	1106	181	760	956	204	849	878	225	928	755	245	1010	616	266	1092
	4 (MED/HI)	1147	197	776	1042	218	860	916	243	944	820	262	1017	671	286	1103
	5 (HI)	1272	252	830	1177	277	909	1037	304	986	975	323	1053	872	347	1125
XQE05 (4)	1 (LOW)	1256	220	776	1170	242	851	1077	266	931	988	298	1025	872	321	1113
	2 (MED/LOW)	1350	272	828	1279	292	893	1196	320	966	1105	347	1048	1003	372	1131
	3 (MED)	1449	323	866	1380	350	937	1303	370	996	1223	402	1071	1133	428	1149
	4 (MED/HI)	1488	345	882	1418	374	954	1357	394	1006	1264	424	1083	1160	442	1155
	5 (HI)	1677	471	966	1602	507	1034	1543	525	1083	1475	545	1131	1209	465	1162
XQE06 (5)	1 (LOW)	1548	310	720	1441	336	792	1337	370	864	1213	397	928	1097	421	988
	2 (MED/LOW)	1593	337	738	1488	363	805	1381	394	875	1271	425	937	1150	451	997
	3 (MED)	1880	532	827	1792	563	890	1719	588	944	1632	629	1006	1527	652	1061
	4 (MED/HI)	2066	689	895	1999	712	942	1907	761	999	1830	773	1048	1734	809	1100
	5 (HI)	2237	862	949	2163	882	996	2097	929	1036	1998	946	1085	1815	883	1115

Power Exhaust Blower Curves

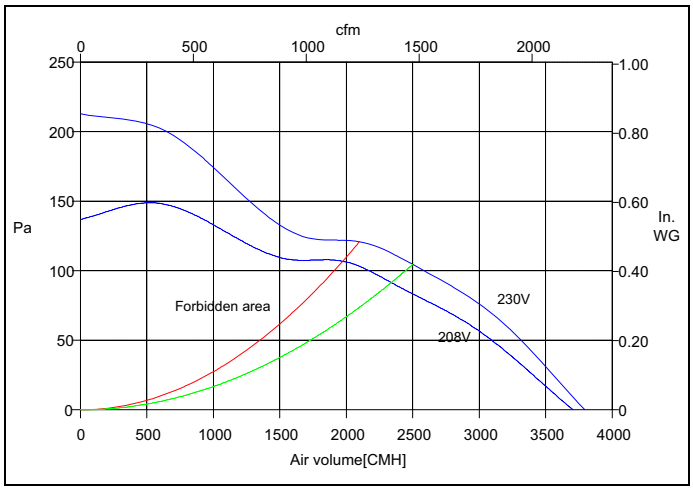

208/280-1-60 Power Exhaust Fan Curve

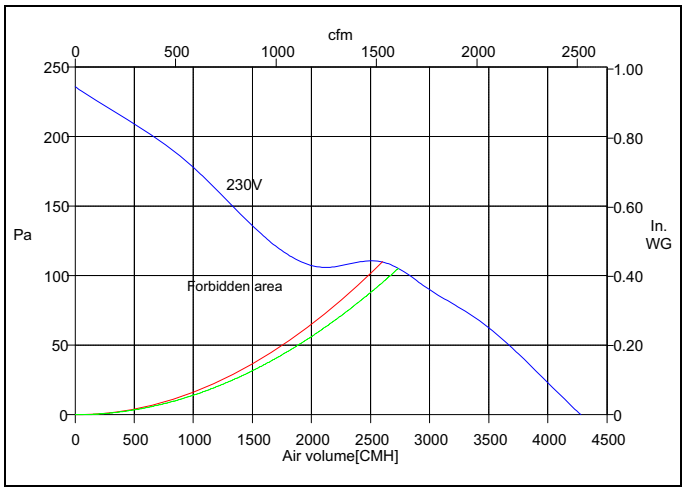

208/280-3-60 Power Exhaust Fan Curve

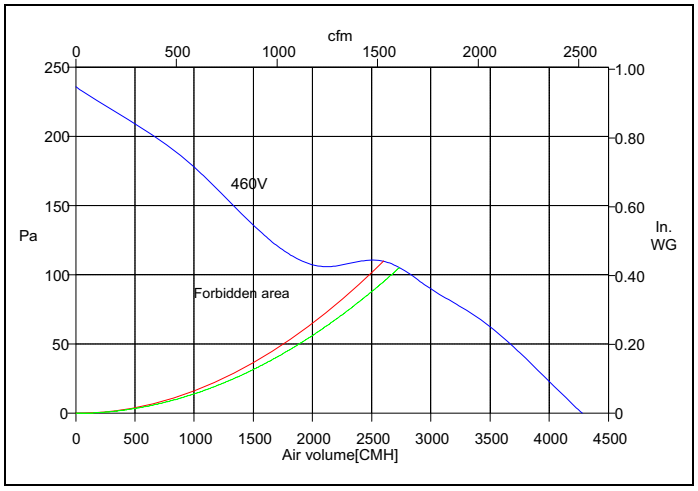

460-3-60 Power Exhaust Fan Curve

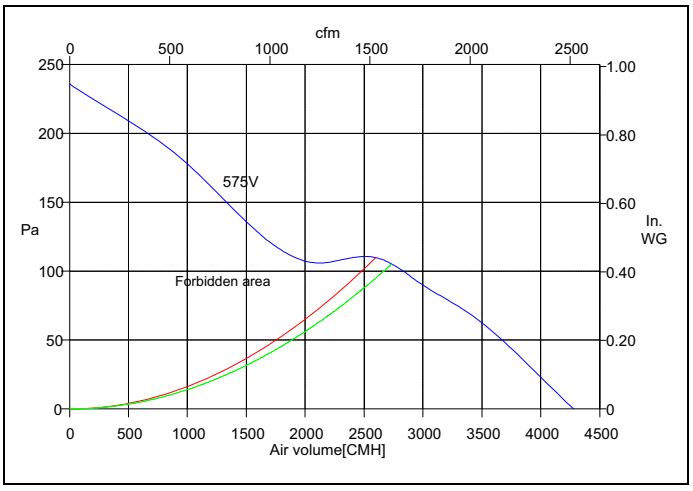

575-3-50 Power Exhaust Fan Curve

Electrical Data

XYE04-09 Standard Indoor Blower - Without Powered Convenience Outlet

Size (Tons)	Nominal Unit Voltage	Compressor 1			Compressor 2			OD Fan Motors (each)	Supply Blower Motor	Pwr Exh Motor	Pwr Conv Outlet	Electric Heat Field Installed Kit 2EK045*				MCA[1] (Amps)	Min Fuse[2]/ Breaker[3] Size (Amps)	Max Fuse[2]/ Breaker[3] Size (Amps)	Min Discon-nect Rating[4]		MCA[1] w/Pwr Exh (Amps)	Min Fuse[2]/ Breaker[3] Size w/ Pwr Exh (Amps)	Max Fuse[2]/ Breaker[3] Size w/ Pwr Exh (Amps)	Min Discon-nect Rating[4]/ Pwr Exh	
		RLA	LRA	MCC	RLA	LRA	MCC					Model	kW	Stages	Amps				FLA	LRA				FLA	LRA
04 (3)	208-1-60	15.4	83.9	24				2.3	6.6	1.5		None	-	-	-	28.2	30	40	28	91	29.7	30	45	30	94
												10625	4.9	1	23.6	57.7	60	60	55	114	59.2	60	60	57	118
												11125	7.9	1	38	75.7	80	80	72	129	77.2	80	80	73	132
	230-1-60	15.4	83.9	24				2.3	6	1.3		None	-	-	-	27.6	30	40	27	91	28.9	30	40	29	94
												10625	6.5	1	27.1	61.5	70	70	58	118	62.8	70	70	60	121
												11125	10.5	1	43.8	82.4	90	90	78	135	83.7	90	90	79	138
	208-3-60	10.4	73	16				2.3	6.6	1.1		None	-	-	-	21.9	25	30	22	80	23	25	30	23	82
												10625	4.9	1	13.6	38.9	40	45	38	93	40	40	45	39	96
												11125	7.9	1	21.9	49.3	50	50	47	102	50.4	60	60	49	104
												11625	12	1	33.3	63.5	70	70	60	113	64.6	70	70	62	116
	230-3-60	10.4	73	16				2.3	6	1		None	-	-	-	21.3	25	30	22	80	22.3	25	30	23	82
												10625	6.5	1	15.6	40.8	45	45	39	96	41.8	45	45	41	98
												11125	10.5	1	25.3	52.9	60	60	51	105	53.9	60	60	52	108
												11625	16	1	38.5	69.4	70	70	66	119	70.4	80	80	67	121
	460-3-60	5.8	38	9				1.3	3.2	0.5		None	-	-	-	11.8	15	15	12	43	12.3	15	15	12	44
												10646	6	1	7.2	20.8	25	25	20	50	21.3	25	25	21	51
												11146	11.5	1	13.8	29.1	30	30	28	57	29.6	30	30	28	58
												11446	14	1	16.8	32.8	35	35	31	60	33.3	35	35	32	61
	575-3-60	3.8	36.5	6				1.1	6	0.4		None	-	-	-	8.3	15	15	8	40	8.7	15	15	9	41
												11058	9.2	1	8.9	19.4	20	20	19	49	19.8	20	20	19	49
												11458	13.8	1	13.3	24.9	25	25	24	53	25.3	30	30	24	54
05 (4)	208-1-60	19.6	130	31				2.3	8.4	1.5		None	-	-	-	35.2	40	50	35	137	36.7	40	50	37	140
												10625	4.9	1	23.6	64.7	70	70	62	160	66.2	70	70	64	164
												11125	7.9	1	38	82.7	90	90	79	175	84.2	90	90	80	178
	230-1-60	19.6	130	31				2.3	7.6	1.3		None	-	-	-	34.4	35	50	34	137	35.7	40	50	35	140
												10625	6.5	1	27.1	68.3	70	80	65	164	69.6	70	80	67	167
												11125	10.5	1	43.8	89.2	90	90	84	181	90.5	100	100	86	184
	208-3-60	13.7	83.1	21				2.3	8.4	1.1		None	-	-	-	27.8	30	40	28	90	28.9	30	40	29	92
												10625	4.9	1	13.6	44.8	45	50	44	104	45.9	50	50	45	106
												11125	7.9	1	21.9	55.2	60	60	53	112	56.3	60	60	55	114
												11625	12	1	33.3	69.4	70	70	66	123	70.5	80	80	68	126
	230-3-60	13.7	83.1	21				2.3	7.6	1		None	-	-	-	27	30	40	27	90	28	30	40	28	92
												10625	6.5	1	15.6	46.5	50	50	45	106	47.5	50	50	46	108
												11125	10.5	1	25.3	58.6	60	60	56	115	59.6	60	60	57	118
												11625	16	1	38.5	75.1	80	80	71	129	76.1	80	80	73	131
	460-3-60	6.2	41	10				1.3	4	0.5		None	-	-	-	13.1	15	15	13	46	13.6	15	15	14	47
												10646	6	1	7.2	22.1	25	25	22	53	22.6	25	25	22	54
												11146	11.5	1	13.8	30.4	35	35	29	60	30.9	35	35	30	61
												11446	14	1	16.8	34.1	35	35	33	63	34.6	35	35	33	64
	575-3-60	4.8	33	8				1.1	7.6	0.4		None	-	-	-	10.1	15	15	10	36	10.5	15	15	11	37
												11058	9.2	1	8.9	21.2	25	25	20	45	21.6	25	25	21	46
												11458	13.8	1	13.3	26.7	30	30	26	49	27.1	30	30	26	50

XYE04-09 Standard Indoor Blower - Without Powered Convenience Outlet (Continued)

Size (Tons)	Nominal Unit Voltage	Compressor 1			Compressor 2			OD Fan Motors (each)	Supply Blower Motor	Pwr Exh Motor	Pwr Conv Outlet	Electric Heat Field Installed Kit 2EK045*				MCA[1] (Amps)	Min Fuse[2]/ Breaker[3] Size (Amps)	Max Fuse[2]/ Breaker[3] Size (Amps)	Min Discon-nect Rating[4]		MCA[1] w/Pwr Exh (Amps)	Min Fuse[2]/ Breaker[3] Size w/ Pwr Exh (Amps)	Max Fuse[2]/ Breaker[3] Size w/ Pwr Exh (Amps)	Min Discon-nect Rating[4]/ Pwr Exh	
		RLA	LRA	MCC	RLA	LRA	MCC					Model	kW	Stages	Amps				FLA	LRA				FLA	LRA
06 (5)	208-1-60	24.4	144.2	38				2.3	8.4	1.5		None	-	-	-	41.2	45	60	40	151	42.7	45	60	42	154
												10625	4.9	1	23.6	70.7	80	80	68	175	72.2	80	90	69	178
												11125	7.9	1	38	88.7	90	100	84	189	90.2	100	100	86	192
	230-1-60	24.4	144.2	38				2.3	7.6	1.3		None	-	-	-	40.4	45	60	39	151	41.7	45	60	41	154
												10625	6.5	1	27.1	74.3	80	90	71	178	75.6	80	90	72	181
												11125	10.5	1	43.8	95.2	100	100	90	195	96.5	100	100	91	198
	208-3-60	16	110	25				2.3	8.4	1.1		None	-	-	-	30.7	35	45	31	117	31.8	35	45	32	119
												10625	4.9	1	13.6	47.7	50	60	46	130	48.8	50	60	48	133
												11125	7.9	1	21.9	58.1	60	60	56	139	59.2	60	60	57	141
												11625	12	1	33.3	72.3	80	80	69	150	73.4	80	80	70	153
	230-3-60	16	110	25				2.3	7.6	1		None	-	-	-	29.9	30	45	30	117	30.9	35	45	31	119
												10625	6.5	1	15.6	49.4	50	60	48	133	50.4	60	60	49	135
												11125	10.5	1	25.3	61.5	70	70	59	142	62.5	70	70	60	145
												11625	16	1	38.5	78	80	80	74	156	79	80	80	75	158
	460-3-60	7.8	52	12				1.3	4	0.5		None	-	-	-	15.1	20	20	15	57	15.6	20	20	16	58
												10646	6	1	7.2	24.1	25	30	23	64	24.6	25	30	24	65
												11146	11.5	1	13.8	32.4	35	35	31	71	32.9	35	35	32	72
												11446	14	1	16.8	36.1	40	40	34	74	36.6	40	40	35	75
	575-3-60	5.7	38.9	9				1.1	7.6	0.4		None	-	-	-	11.2	15	15	11	42	11.6	15	15	12	43
												11458	13.8	1	13.3	27.8	30	30	27	55	28.2	30	30	27	56
												12358	23	1	22.1	38.8	40	40	37	64	39.2	40	40	37	65
07 (6)	208-3-60	19.6	136	31				2.3	5.2	1.1		None	-	-	-	34.3	35	50	34	178	36.5	40	50	36	188
												10725	4.9	1	13.6	51.3	60	60	49	191	53.5	60	60	52	201
												11725	12	1	33.3	75.9	80	80	72	211	78.1	80	80	75	221
												12525	18.6	1	51.6	98.8	100	100	93	229	101	110	110	96	239
	230-3-60	19.6	136	31				2.3	5.2	1		None	-	-	-	34.3	35	50	34	181	36.3	40	50	36	176
												10725	6.5	1	15.6	53.8	60	60	52	197	55.8	60	70	54	206
												11725	16	1	38.5	82.4	90	90	78	220	84.4	90	90	80	229
												12525	24.8	1	59.7	108.9	110	110	102	241	110.9	125	125	105	250
	460-3-60	8.2	66.1	13				1.3	2.6	0.5		None	-	-	-	15.5	20	20	15	90	16.5	20	20	17	87
												10746	6	1	7.2	24.5	25	30	24	97	25.5	30	30	25	102
												11746	16.5	1	19.8	40.3	45	45	38	110	41.3	45	45	39	114
												12646	25.5	1	30.7	53.9	60	60	51	121	54.9	60	60	52	125
	575-3-60	6.6	55.3	10				1.1	2	0.4		None	-	-	-	12.5	15	15	12	75	13.3	15	15	13	72
												11758	17	1	16.4	33	35	35	31	91	33.8	35	35	32	95
												12658	25.7	1	24.7	43.4	45	45	41	99	44.2	45	45	42	103
A7 (6)	208-3-60	17.6	136	27				4.4	5.2	1.1		None	-	-	-	31.6	35	45	31	158	33.8	35	50	34	163
												10725	4.9	1	13.6	48.6	50	60	47	172	50.8	60	60	49	177
												11725	12	1	33.3	73.2	80	80	70	192	75.4	80	80	72	197
												12525	18.6	1	51.6	96.1	100	100	91	210	98.3	100	100	93	215
	230-3-60	17.6	136	27				4.4	5.2	1		None	-	-	-	31.6	35	45	31	161	33.6	35	50	34	166
												10725	6.5	1	15.6	51.1	60	60	49	177	53.1	60	60	52	181
												11725	16	1	38.5	79.7	80	80	76	200	81.7	90	90	78	204
												12525	24.8	1	59.7	106.2	110	110	100	221	108.2	110	110	102	225
	460-3-60	8.5	66.1	13				2.5	2.6	0.5		None	-	-	-	18.2	20	25	19	79	19.2	20	25	20	81
												10746	6	1	7.2	27.2	30	30	27	86	28.2	30	30	28	88
												11746	16.5	1	19.8	43	45	45	41	98	44	45	45	42	101
												12646	25.5	1	30.7	56.6	60	60	54	109	57.6	60	60	55	112
	575-3-60	6.3	55.3	10				4.4	2	0.4		None	-	-	-	18.7	20	20	20	65	19.5	20	20	21	67
												11758	17	1	16.4	39.2	40	40	39	82	40	40	40	39	84
												12658	25.7	1	24.7	49.6	50	50	48	90	50.4	60	60	49	92

XYE04-09 Standard Indoor Blower - Without Powered Convenience Outlet (Continued)

Size (Tons)	Nominal Unit Voltage	Compressor 1			Compressor 2			OD Fan Motors (each)	Supply Blower Motor	Pwr Exh Motor	Pwr Conv Outlet	Electric Heat Field Installed Kit 2EK045*				MCA[1] (Amps)	Min Fuse[2]/ Breaker[3] Size (Amps)	Max Fuse[2]/ Breaker[3] Size (Amps)	Min Discon-nect Rating[4]		MCA[1] w/Pwr Exh (Amps)	Min Fuse[2]/ Breaker[3] Size w/ Pwr Exh (Amps)	Max Fuse[2]/ Breaker[3] Size w/ Pwr Exh (Amps)	Min Discon-nect Rating[4]/ Pwr Exh	
		RLA	LRA	MCC	RLA	LRA	MCC					Model	kW	Stages	Amps				FLA	LRA				FLA	LRA
08 (7.5)	208-3-60	13.8	83.1	22	13.6	83.1	21	5.8	5.2	1.1		None	-	-	-	41.9	45	50	44	211	44.1	45	50	47	221
												11725	12	1	33.3	83.5	90	90	82	244	85.7	90	90	85	254
												12525	18.6	1	51.6	106.4	110	110	104	262	108.6	110	110	106	272
												13225	24	1	66.6	125.2	150	150	121	277	127.4	150	150	123	287
												14225	31.8	2	88.3	116.9	125	125	112	270	119.6	125	125	115	280
	230-3-60	13.8	83.1	22	13.6	83.1	21	5.2	5.2	1		None	-	-	-	41.3	45	50	43	210	43.3	45	50	46	215
												11725	16	1	38.5	89.4	90	90	88	249	91.4	100	100	90	258
												12525	24.8	1	59.7	115.9	125	125	112	270	117.9	125	125	114	279
												13225	32	1	77	137.6	150	150	132	287	139.6	150	150	134	296
												14225	42.4	2	102	134	150	150	122	278	136.5	150	150	124	288
	460-3-60	6.2	41	10	6.1	41	10	2.9	2.6	0.5		None	-	-	-	19.4	20	25	20	106	20.4	25	25	22	108
												11746	16.5	1	19.8	44.2	45	45	43	125	45.2	50	50	44	130
												12846	27.8	1	33.4	61.2	70	70	59	139	62.2	70	70	60	143
												13346	33	1	39.7	69	70	70	66	145	70	70	70	67	150
												14246	41.7	2	50.2	66	70	70	59	139	67.3	70	70	60	143
	575-3-60	4.9	33	8	4.2	33	7	2.2	2	0.4		None	-	-	-	14.5	15	15	15	87	15.3	20	20	16	89
												11758	17	1	16.4	35	35	35	34	104	35.8	40	40	35	107
												13458	34	1	32.7	55.4	60	60	53	120	56.2	60	60	54	124
09 (8.5)	208-3-60	14.5	98	23	13.7	83.1	21	5.8	5.2	1.1		None	-	-	-	42.8	45	50	45	226	45	45	50	48	236
												11725	12	1	33.3	84.4	90	90	83	259	86.6	90	90	86	269
												12525	18.6	1	51.6	107.3	110	110	104	277	109.5	110	110	107	287
												13225	24	1	66.6	126.1	150	150	122	292	128.3	150	150	124	302
												14225	31.8	2	88.3	116.9	125	125	113	285	119.6	125	125	116	295
	230-3-60	14.5	98	23	13.7	83.1	21	5.2	5.2	1		None	-	-	-	42.2	45	50	44	225	44.2	45	50	47	230
												11725	16	1	38.5	90.3	100	100	89	264	92.3	100	100	91	273
												12525	24.8	1	59.7	116.8	125	125	113	285	118.8	125	125	115	294
												13225	32	1	77	138.5	150	150	133	302	140.5	150	150	135	311
												14225	42.4	2	102	134	150	150	123	293	136.5	150	150	125	302
	460-3-60	6.3	55	10	6.2	41	10	2.9	2.6	0.5		None	-	-	-	19.6	20	25	21	120	20.6	25	25	22	122
												11746	16.5	1	19.8	44.4	45	45	43	139	45.4	50	50	45	144
												12846	27.8	1	33.4	61.4	70	70	59	153	62.4	70	70	60	157
												13346	33	1	39.7	69.2	70	70	66	159	70.2	80	80	68	164
												14246	41.7	2	50.2	66	70	70	59	153	67.3	70	70	60	157
	575-3-60	6	41	9	4.8	33	8	2.2	2	0.4		None	-	-	-	16.5	20	20	17	95	17.3	20	20	18	97
												11758	17	1	16.4	37	40	40	36	112	37.8	40	40	37	115
												13458	34	1	32.7	57.4	60	60	55	128	58.2	60	60	56	132
With VFD																									
A7 (6)	208-3-60	17.6	136	27				4.4	7	1.1		None	-	-	-	33.4	35	50	33	196	35.6	40	50	36	201
												10725	4.9	1	13.6	50.4	60	60	49	210	52.6	60	60	52	215
												11725	12	1	33.3	75	80	80	72	229	77.2	80	80	74	234
												12525	18.6	1	51.6	97.9	100	100	93	248	100.1	110	110	95	253
	230-3-60	17.6	136	27				4.4	7.2	1		None	-	-	-	33.6	35	50	34	198	35.6	40	50	36	202
												10725	6.5	1	15.6	53.1	60	60	52	213	55.1	60	60	54	218
												11725	16	1	38.5	81.7	90	90	78	236	83.7	90	90	80	241
												12525	24.8	1	59.7	108.2	110	110	102	258	110.2	125	125	105	262
	460-3-60	8.5	66.1	13				2.5	3.6	0.5		None	-	-	-	19.2	20	25	20	97	20.2	25	25	21	99
												10746	6	1	7.2	28.2	30	30	28	104	29.2	30	30	29	106
												11746	16.5	1	19.8	44	45	45	42	117	45	45	45	44	119
												12646	25.5	1	30.7	57.6	60	60	55	128	58.6	60	60	56	130
	575-3-60	6.3	55.3	10				4.4	2.5	0.4		None	-	-	-	19.2	20	25	20	73	20	20	25	21	75
												11758	17	1	16.4	39.7	40	40	39	89	40.5	45	45	40	91
												12658	25.7	1	24.7	50.1	60	60	49	98	50.9	60	60	50	100

XYE04-09 Standard Indoor Blower - Without Powered Convenience Outlet (Continued)

Size (Tons)	Nominal Unit Voltage	Compressor 1			Compressor 2			OD Fan Motors (each)	Supply Blower Motor	Pwr Exh Motor	Pwr Conv Outlet	Electric Heat Field Installed Kit 2EK045*				MCA[1] (Amps)	Min Fuse[2]/ Breaker[3] Size (Amps)	Max Fuse[2]/ Breaker[3] Size (Amps)	Min Discon-nect Rating[4]		MCA[1] w/Pwr Exh (Amps)	Min Fuse[2]/ Breaker[3] Size w/ Pwr Exh (Amps)	Max Fuse[2]/ Breaker[3] Size w/ Pwr Exh (Amps)	Min Discon-nect Rating[4]/ Pwr Exh	
		RLA	LRA	MCC	RLA	LRA	MCC					Model	kW	Stages	Amps				FLA	LRA				FLA	LRA
08 (7.5)	208-3-60	13.8	83.1	22	13.6	83.1	21	5.8	7	1.1		None	-	-	-	43.7	45	50	46	248	45.9	50	50	49	258
												11725	12	1	33.3	85.3	90	90	85	282	87.5	90	90	87	292
												12525	18.6	1	51.6	108.2	110	110	106	300	110.4	125	125	108	310
												13225	24	1	66.6	127	150	150	123	315	129.2	150	150	125	325
												14225	31.8	2	88.3	119.1	125	125	114	307	121.9	125	125	117	317
	230-3-60	13.8	83.1	22	13.6	83.1	21	5.2	7.2	1		None	-	-	-	43.3	45	50	46	247	45.3	50	50	48	252
												11725	16	1	38.5	91.4	100	100	90	286	93.4	100	100	92	295
												12525	24.8	1	59.7	117.9	125	125	114	307	119.9	125	125	117	316
												13225	32	1	77	139.6	150	150	134	324	141.6	150	150	137	333
												14225	42.4	2	102	136.5	150	150	124	315	139	150	150	126	324
	460-3-60	6.2	41	10	6.1	41	10	2.9	3.6	0.5		None	-	-	-	20.4	25	25	22	124	21.4	25	25	23	126
												11746	16.5	1	19.8	45.2	50	50	44	144	46.2	50	50	46	148
												12846	27.8	1	33.4	62.2	70	70	60	157	63.2	70	70	61	162
												13346	33	1	39.7	70	70	70	67	164	71	80	80	68	168
												14246	41.7	2	50.2	67.3	70	70	60	157	68.5	70	70	61	162
	575-3-60	4.9	33	8	4.2	33	7	2.2	2.5	0.4		None	-	-	-	15	20	20	16	95	15.8	20	20	17	97
												11758	17	1	16.4	35.5	40	40	35	111	36.3	40	40	36	115
												13458	34	1	32.7	55.9	60	60	53	128	56.7	60	60	54	131
09 (8.5)	208-3-60	14.5	98	23	13.7	83.1	21	5.8	7	1.1		None	-	-	-	44.6	45	50	47	263	46.8	50	60	50	273
												11725	12	1	33.3	86.2	90	90	85	297	88.4	90	90	88	307
												12525	18.6	1	51.6	109.1	110	110	106	315	111.3	125	125	109	325
												13225	24	1	66.6	127.9	150	150	124	330	130.1	150	150	126	340
												14225	31.8	2	88.3	119.1	125	125	115	322	121.9	125	125	118	332
	230-3-60	14.5	98	23	13.7	83.1	21	5.2	7.2	1		None	-	-	-	44.2	45	50	47	262	46.2	50	60	49	267
												11725	16	1	38.5	92.3	100	100	91	300	94.3	100	100	93	310
												12525	24.8	1	59.7	118.8	125	125	115	322	120.8	125	125	118	331
												13225	32	1	77	140.5	150	150	135	339	142.5	150	150	138	348
												14225	42.4	2	102	136.5	150	150	125	330	139	150	150	127	339
	460-3-60	6.3	55	10	6.2	41	10	2.9	3.6	0.5		None	-	-	-	20.6	25	25	22	138	21.6	25	25	23	140
												11746	16.5	1	19.8	45.4	50	50	45	158	46.4	50	50	46	162
												12846	27.8	1	33.4	62.4	70	70	60	171	63.4	70	70	61	176
												13346	33	1	39.7	70.2	80	80	68	178	71.2	80	80	69	182
												14246	41.7	2	50.2	67.3	70	70	60	171	68.5	70	70	61	176
	575-3-60	6	41	9	4.8	33	8	2.2	2.5	0.4		None	-	-	-	17	20	20	18	103	17.8	20	20	19	105
												11758	17	1	16.4	37.5	40	40	37	119	38.3	40	40	38	123
												13458	34	1	32.7	57.9	60	60	55	136	58.7	60	60	56	139

1. Minimum Circuit Ampacity.
2. Dual Element, Time Delay Type.
3. HACR type per NEC.
4. Non-fused Disconnect, Verify on the unit nameplate that the disconnect is properly sized for the application. Units with field installed electric heat kits may exceed the factory installed disconnect amperage rating.

XYE04-09 Standard Indoor Blower - With Powered Convenience Outlet

Size (Tons)	Nominal Unit Voltage	Compressor 1			Compressor 2			OD Fan Motors (each)	Supply Blower Motor	Pwr Exh Motor	Pwr Conv Outlet	Electric Heat Field Installed Kit 2EK045*				MCA[1] (Amps)	Min Fuse[2]/ Breaker[3] Size (Amps)	Max Fuse[2]/ Breaker[3] Size (Amps)	Min Discon-nect Rating[4]		MCA[1] w/Pwr Exh (Amps)	Min Fuse[2]/ Breaker[3] Size w/ Pwr Exh (Amps)	Max Fuse[2]/ Breaker[3] Size w/ Pwr Exh (Amps)	Min Discon-nect Rating[4]/ Pwr Exh	
		RLA	LRA	MCC	RLA	LRA	MCC					Model	kW	Stages	Amps				FLA	LRA				FLA	LRA
04 (3)	208-1-60	15.4	83.9	24				2.3	6.6	1.5	8.6	None	-	-	-	32.5	35	45	33	95	34	35	45	35	98
												10625	4.9	1	23.6	62	70	70	60	119	63.5	70	70	62	122
												11125	7.9	1	38	80	80	80	77	133	81.5	90	90	78	136
	230-1-60	15.4	83.9	24				2.3	6	1.3	8.6	None	-	-	-	31.9	35	45	32	95	33.2	35	45	34	98
												10625	6.5	1	27.1	65.8	70	70	63	122	67.1	70	70	65	125
												11125	10.5	1	43.8	86.7	90	90	83	139	88	90	90	84	142
	208-3-60	10.4	73	16				2.3	6.6	1.1	8.6	None	-	-	-	26.2	30	35	27	84	27.3	30	35	28	87
												10625	4.9	1	13.6	43.2	45	50	43	98	44.3	45	50	44	100
												11125	7.9	1	21.9	53.6	60	60	52	106	54.7	60	60	54	109
												11625	12	1	33.3	67.8	70	70	65	117	68.9	70	70	67	120
	230-3-60	10.4	73	16				2.3	6	1	8.6	None	-	-	-	25.6	30	35	26	84	26.6	30	35	28	87
												10625	6.5	1	15.6	45.1	50	50	44	100	46.1	50	50	46	102
												11125	10.5	1	25.3	57.2	60	60	56	110	58.2	60	60	57	112
												11625	16	1	38.5	73.7	80	80	71	123	74.7	80	80	72	125
	460-3-60	5.8	38	9				1.3	3.2	0.5	8.6	None	-	-	-	14	15	15	14	45	14.5	15	15	15	46
												10646	6	1	7.2	23	25	25	23	52	23.5	25	25	23	53
												11146	11.5	1	13.8	31.3	35	35	30	59	31.8	35	35	31	60
												11446	14	1	16.8	35	35	35	34	62	35.5	40	40	34	63
	575-3-60	3.8	36.5	6				1.1	6	0.4	8.6	None	-	-	-	10	15	15	10	41	10.4	15	15	11	42
												11058	9.2	1	8.9	21.1	25	25	21	50	21.5	25	25	21	51
												11458	13.8	1	13.3	26.6	30	30	26	55	27	30	30	26	56
05 (4)	208-1-60	19.6	130	31				2.3	8.4	1.5	8.6	None	-	-	-	39.5	40	50	40	141	41	45	60	42	145
												10625	4.9	1	23.6	69	70	80	67	165	70.5	80	80	69	168
												11125	7.9	1	38	87	90	90	83	179	88.5	90	90	85	183
	230-1-60	19.6	130	31				2.3	7.6	1.3	8.6	None	-	-	-	38.7	40	50	39	141	40	40	50	40	144
												10625	6.5	1	27.1	72.6	80	80	70	168	73.9	80	80	72	171
												11125	10.5	1	43.8	93.5	100	100	89	185	94.8	100	100	91	188
	208-3-60	13.7	83.1	21				2.3	8.4	1.1	8.6	None	-	-	-	32.1	35	45	33	94	33.2	35	45	34	97
												10625	4.9	1	13.6	49.1	50	50	49	108	50.2	60	60	50	110
												11125	7.9	1	21.9	59.5	60	60	58	116	60.6	70	70	59	119
												11625	12	1	33.3	73.7	80	80	71	128	74.8	80	80	73	130
	230-3-60	13.7	83.1	21				2.3	7.6	1	8.6	None	-	-	-	31.3	35	45	32	94	32.3	35	45	33	97
												10625	6.5	1	15.6	50.8	60	60	50	110	51.8	60	60	51	112
												11125	10.5	1	25.3	62.9	70	70	61	120	63.9	70	70	62	122
												11625	16	1	38.5	79.4	80	80	76	133	80.4	90	90	78	135
	460-3-60	6.2	41	10				1.3	4	0.5	8.6	None	-	-	-	15.3	20	20	16	48	15.8	20	20	16	49
												10646	6	1	7.2	24.3	25	25	24	55	24.8	25	25	25	56
												11146	11.5	1	13.8	32.6	35	35	32	62	33.1	35	35	32	63
												11446	14	1	16.8	36.3	40	40	35	65	36.8	40	40	36	66
	575-3-60	4.8	33	8				1.1	7.6	0.4	8.6	None	-	-	-	11.9	15	15	12	38	12.3	15	15	13	39
												11058	9.2	1	8.9	23	25	25	23	47	23.4	25	25	23	48
												11458	13.8	1	13.3	28.5	30	30	28	51	28.9	30	30	28	52

XYE04-09 Standard Indoor Blower - With Powered Convenience Outlet (Continued)

Size (Tons)	Nominal Unit Voltage	Compressor 1			Compressor 2			OD Fan Motors (each)	Supply Blower Motor	Pwr Exh Motor	Pwr Conv Outlet	Electric Heat Field Installed Kit 2EK045*				MCA[1] (Amps)	Min Fuse[2]/ Breaker[3] Size (Amps)	Max Fuse[2]/ Breaker[3] Size (Amps)	Min Discon-nect Rating[4]		MCA[1] w/Pwr Exh (Amps)	Min Fuse[2]/ Breaker[3] Size w/ Pwr Exh (Amps)	Max Fuse[2]/ Breaker[3] Size w/ Pwr Exh (Amps)	Min Discon-nect Rating[4]/ Pwr Exh	
		RLA	LRA	MCC	RLA	LRA	MCC					Model	kW	Stages	Amps				FLA	LRA				FLA	LRA
06 (5)	208-1-60	24.4	144.2	38				2.3	8.4	1.5	8.6	None	-	-	-	45.5	50	60	45	155	47	50	70	47	159
												10625	4.9	1	23.6	75	80	90	72	179	76.5	80	90	74	182
												11125	7.9	1	38	93	100	100	89	193	94.5	100	100	91	197
	230-1-60	24.4	144.2	38				2.3	7.6	1.3	8.6	None	-	-	-	44.7	45	60	44	156	46	50	70	46	158
												10625	6.5	1	27.1	78.6	80	90	76	183	79.9	80	90	77	186
												11125	10.5	1	43.8	99.5	100	110	95	199	100.8	110	110	96	202
	208-3-60	16	110	25				2.3	8.4	1.1	8.6	None	-	-	-	35	35	50	36	121	36.1	40	50	37	124
												10625	4.9	1	13.6	52	60	60	51	135	53.1	60	60	53	137
												11125	7.9	1	21.9	62.4	70	70	61	143	63.5	70	70	62	146
												11625	12	1	33.3	76.6	80	80	74	154	77.7	80	80	75	157
	230-3-60	16	110	25				2.3	7.6	1	8.6	None	-	-	-	34.2	35	50	35	121	35.2	40	50	36	124
												10625	6.5	1	15.6	53.7	60	60	53	137	54.7	60	60	54	139
												11125	10.5	1	25.3	65.8	70	70	64	147	66.8	70	70	65	149
												11625	16	1	38.5	82.3	90	90	79	160	83.3	90	90	80	162
	460-3-60	7.8	52	12				1.3	4	0.5	8.6	None	-	-	-	17.3	20	25	18	59	17.8	20	25	18	60
												10646	6	1	7.2	26.3	30	30	26	66	26.8	30	30	26	67
												11146	11.5	1	13.8	34.6	35	35	33	73	35.1	40	40	34	74
												11446	14	1	16.8	38.3	40	40	37	76	38.8	40	40	37	77
	575-3-60	5.7	38.9	9				1.1	7.6	0.4	8.6	None	-	-	-	13	15	15	13	44	13.4	15	15	14	45
												11458	13.8	1	13.3	29.6	30	30	29	57	30	30	30	29	58
												12358	23	1	22.1	40.6	45	45	39	66	41	45	45	39	67
07 (6)	208-3-60	19.6	136	31				2.3	5.2	1.1	8.6	None	-	-	-	38.6	40	50	39	182	40.8	45	50	41	192
												10725	4.9	1	13.6	55.6	60	70	54	196	57.8	60	70	57	206
												11725	12	1	33.3	80.2	90	90	77	215	82.4	90	90	80	225
												12525	18.6	1	51.6	103.1	110	110	98	234	105.3	110	110	101	244
	230-3-60	19.6	136	31				2.3	5.2	1	8.6	None	-	-	-	38.6	40	50	39	185	40.6	45	60	41	180
												10725	6.5	1	15.6	58.1	60	70	57	201	60.1	70	70	59	210
												11725	16	1	38.5	86.7	90	90	83	224	88.7	90	90	85	233
												12525	24.8	1	59.7	113.2	125	125	107	245	115.2	125	125	110	254
	460-3-60	8.2	66.1	13				1.3	2.6	0.5	8.6	None	-	-	-	17.7	20	25	18	92	18.7	20	25	19	89
												10746	6	1	7.2	26.7	30	30	26	100	27.7	30	30	27	104
												11746	16.5	1	19.8	42.5	45	45	41	112	43.5	45	45	42	117
												12646	25.5	1	30.7	56.1	60	60	53	123	57.1	60	60	54	127
	575-3-60	6.6	55.3	10				1.1	2	0.4	8.6	None	-	-	-	14.2	15	20	14	76	15	15	20	15	74
												11758	17	1	16.4	34.7	35	35	33	93	35.5	40	40	34	96
												12658	25.7	1	24.7	45.1	50	50	43	101	45.9	50	50	44	105
A7 (6)	208-3-60	17.6	136	27				4.4	5.2	1.1	8.6	None	-	-	-	35.9	40	50	36	163	38.1	40	50	39	168
												10725	4.9	1	13.6	52.9	60	60	52	176	55.1	60	60	54	181
												11725	12	1	33.3	77.5	80	80	75	196	79.7	80	80	77	201
												12525	18.6	1	51.6	100.4	110	110	96	214	102.6	110	110	98	219
	230-3-60	17.6	136	27				4.4	5.2	1	8.6	None	-	-	-	35.9	40	50	36	165	37.9	40	50	39	170
												10725	6.5	1	15.6	55.4	60	60	54	181	57.4	60	70	56	186
												11725	16	1	38.5	84	90	90	81	204	86	90	90	83	208
												12525	24.8	1	59.7	110.5	125	125	105	225	112.5	125	125	107	230
	460-3-60	8.5	66.1	13				2.5	2.6	0.5	8.6	None	-	-	-	20.4	25	25	21	81	21.4	25	25	22	83
												10746	6	1	7.2	29.4	30	35	29	88	30.4	35	35	30	90
												11746	16.5	1	19.8	45.2	50	50	44	101	46.2	50	50	45	103
												12646	25.5	1	30.7	58.8	60	60	56	111	59.8	60	60	58	114
	575-3-60	6.3	55.3	10				4.4	2	0.4	8.6	None	-	-	-	20.4	25	25	22	67	21.2	25	25	23	69
												11758	17	1	16.4	40.9	45	45	40	83	41.7	45	45	41	85
												12658	25.7	1	24.7	51.3	60	60	50	92	52.1	60	60	51	94

XYE04-09 Standard Indoor Blower - With Powered Convenience Outlet (Continued)

Size (Tons)	Nominal Unit Voltage	Compressor 1			Compressor 2			OD Fan Motors (each)	Supply Blower Motor	Pwr Exh Motor	Pwr Conv Outlet	Electric Heat Field Installed Kit 2EK045*				MCA[1] (Amps)	Min Fuse[2]/ Breaker[3] Size (Amps)	Max Fuse[2]/ Breaker[3] Size (Amps)	Min Discon-nect Rating[4]		MCA[1] w/Pwr Exh (Amps)	Min Fuse[2]/ Breaker[3] Size w/ Pwr Exh (Amps)	Max Fuse[2]/ Breaker[3] Size w/ Pwr Exh (Amps)	Min Discon-nect Rating[4]/ Pwr Exh	
		RLA	LRA	MCC	RLA	LRA	MCC					Model	kW	Stages	Amps				FLA	LRA				FLA	LRA
08 (7.5)	208-3-60	13.8	83.1	22	13.6	83.1	21	5.8	5.2	1.1	8.6	None	-	-	-	46.2	50	50	49	215	48.4	50	60	52	225
												11725	12	1	33.3	87.8	90	90	87	248	90	90	90	90	258
												12525	18.6	1	51.6	110.7	125	125	108	267	112.9	125	125	111	277
												13225	24	1	66.6	129.5	150	150	126	282	131.7	150	150	128	292
												14225	31.8	2	88.3	122.3	125	125	117	274	125	150	150	120	284
	230-3-60	13.8	83.1	22	13.6	83.1	21	5.2	5.2	1	8.6	None	-	-	-	45.6	50	50	48	215	47.6	50	60	51	219
												11725	16	1	38.5	93.7	100	100	93	253	95.7	100	100	95	262
												12525	24.8	1	59.7	120.2	125	125	117	274	122.2	125	125	119	283
												13225	32	1	77	141.9	150	150	137	292	143.9	150	150	139	301
												14225	42.4	2	102	139.4	150	150	127	283	141.9	150	150	129	292
	460-3-60	6.2	41	10	6.1	41	10	2.9	2.6	0.5	8.6	None	-	-	-	21.6	25	25	23	108	22.6	25	25	24	110
												11746	16.5	1	19.8	46.4	50	50	46	127	47.4	50	50	47	132
												12846	27.8	1	33.4	63.4	70	70	61	141	64.4	70	70	63	145
												13346	33	1	39.7	71.2	80	80	69	147	72.2	80	80	70	152
												14246	41.7	2	50.2	68.7	70	70	61	141	69.9	70	70	63	145
	575-3-60	4.9	33	8	4.2	33	7	2.2	2	0.4	8.6	None	-	-	-	16.2	20	20	17	89	17	20	20	18	91
												11758	17	1	16.4	36.7	40	40	36	105	37.5	40	40	37	109
												13458	34	1	32.7	57.1	60	60	55	122	57.9	60	60	56	125
09 (8.5)	208-3-60	14.5	98	23	13.7	83.1	21	5.8	5.2	1.1	8.6	None	-	-	-	47.1	50	60	50	230	49.3	50	60	53	240
												11725	12	1	33.3	88.7	90	90	88	263	90.9	100	100	91	273
												12525	18.6	1	51.6	111.6	125	125	109	281	113.8	125	125	112	291
												13225	24	1	66.6	130.4	150	150	127	296	132.6	150	150	129	306
												14225	31.8	2	88.3	122.3	125	125	118	289	125	150	150	121	299
	230-3-60	14.5	98	23	13.7	83.1	21	5.2	5.2	1	8.6	None	-	-	-	46.5	50	60	49	229	48.5	50	60	52	234
												11725	16	1	38.5	94.6	100	100	94	268	96.6	100	100	96	277
												12525	24.8	1	59.7	121.1	125	125	118	289	123.1	125	125	120	298
												13225	32	1	77	142.8	150	150	138	306	144.8	150	150	140	316
												14225	42.4	2	102	139.4	150	150	128	298	141.9	150	150	130	307
	460-3-60	6.3	55	10	6.2	41	10	2.9	2.6	0.5	8.6	None	-	-	-	21.8	25	25	23	122	22.8	25	25	24	124
												11746	16.5	1	19.8	46.6	50	50	46	141	47.6	50	50	47	146
												12846	27.8	1	33.4	63.6	70	70	62	155	64.6	70	70	63	159
												13346	33	1	39.7	71.4	80	80	69	161	72.4	80	80	70	166
												14246	41.7	2	50.2	68.7	70	70	62	155	69.9	70	70	63	159
	575-3-60	6	41	9	4.8	33	8	2.2	2	0.4	8.6	None	-	-	-	18.2	20	20	19	97	19	20	20	20	99
												11758	17	1	16.4	38.7	40	40	38	113	39.5	40	40	39	117
												13458	34	1	32.7	59.1	60	60	57	130	59.9	60	60	58	133
With VFD																									
A7 (6)	208-3-60	17.6	136	27				4.4	7	1.1	8.6	None	-	-	-	37.7	40	50	38	200	39.9	40	50	41	205
												10725	4.9	1	13.6	54.7	60	60	54	214	56.9	60	70	56	219
												11725	12	1	33.3	79.3	80	80	77	234	81.5	90	90	79	239
												12525	18.6	1	51.6	102.2	110	110	98	252	104.4	110	110	100	257
	230-3-60	17.6	136	27				4.4	7.2	1	8.6	None	-	-	-	37.9	40	50	39	202	39.9	40	50	41	207
												10725	6.5	1	15.6	57.4	60	70	56	218	59.4	60	70	59	222
												11725	16	1	38.5	86	90	90	83	241	88	90	90	85	245
												12525	24.8	1	59.7	112.5	125	125	107	262	114.5	125	125	109	266
	460-3-60	8.5	66.1	13				2.5	3.6	0.5	8.6	None	-	-	-	21.4	25	25	22	99	22.4	25	25	23	101
												10746	6	1	7.2	30.4	35	35	30	106	31.4	35	35	32	109
												11746	16.5	1	19.8	46.2	50	50	45	119	47.2	50	50	46	121
												12646	25.5	1	30.7	59.8	60	60	58	130	60.8	70	70	59	132
	575-3-60	6.3	55.3	10				4.4	2.5	0.4	8.6	None	-	-	-	20.9	25	25	22	75	21.7	25	25	23	77
												11758	17	1	16.4	41.4	45	45	41	91	42.2	45	45	42	93
												12658	25.7	1	24.7	51.8	60	60	51	99	52.6	60	60	52	101

XYE04-09 Standard Indoor Blower - With Powered Convenience Outlet (Continued)

Size (Tons)	Nominal Unit Voltage	Compressor 1			Compressor 2			OD Fan Motors (each)	Supply Blower Motor	Pwr Exh Motor	Pwr Conv Outlet	Electric Heat Field Installed Kit 2EK045*				MCA[1] (Amps)	Min Fuse[2]/ Breaker[3] Size (Amps)	Max Fuse[2]/ Breaker[3] Size (Amps)	Min Discon-nect Rating[4]		MCA[1] w/Pwr Exh (Amps)	Min Fuse[2]/ Breaker[3] Size w/ Pwr Exh (Amps)	Max Fuse[2]/ Breaker[3] Size w/ Pwr Exh (Amps)	Min Discon-nect Rating[4]/ Pwr Exh	
		RLA	LRA	MCC	RLA	LRA	MCC					Model	kW	Stages	Amps				FLA	LRA				FLA	LRA
08 (7.5)	208-3-60	13.8	83.1	22	13.6	83.1	21	5.8	7	1.1	8.6	None	-	-	-	48	50	60	51	253	50.2	60	60	54	263
												11725	12	1	33.3	89.6	90	90	89	286	91.8	100	100	92	296
												12525	18.6	1	51.6	112.5	125	125	111	304	114.7	125	125	113	314
												13225	24	1	66.6	131.3	150	150	128	319	133.5	150	150	130	329
												14225	31.8	2	88.3	124.5	125	125	119	312	127.3	150	150	122	322
	230-3-60	13.8	83.1	22	13.6	83.1	21	5.2	7.2	1	8.6	None	-	-	-	47.6	50	60	51	251	49.6	50	60	53	256
												11725	16	1	38.5	95.7	100	100	95	290	97.7	100	100	97	299
												12525	24.8	1	59.7	122.2	125	125	119	311	124.2	125	125	122	320
												13225	32	1	77	143.9	150	150	139	328	145.9	150	150	142	338
												14225	42.4	2	102	141.9	150	150	129	319	144.4	150	150	131	329
	460-3-60	6.2	41	10	6.1	41	10	2.9	3.6	0.5	8.6	None	-	-	-	22.6	25	25	24	126	23.6	25	25	25	128
												11746	16.5	1	19.8	47.4	50	50	47	146	48.4	50	50	48	150
												12846	27.8	1	33.4	64.4	70	70	63	159	65.4	70	70	64	164
												13346	33	1	39.7	72.2	80	80	70	166	73.2	80	80	71	170
												14246	41.7	2	50.2	69.9	70	70	63	159	71.2	80	80	64	164
	575-3-60	4.9	33	8	4.2	33	7	2.2	2.5	0.4	8.6	None	-	-	-	16.7	20	20	18	97	17.5	20	20	19	99
												11758	17	1	16.4	37.2	40	40	37	113	38	40	40	38	117
												13458	34	1	32.7	57.6	60	60	55	129	58.4	60	60	56	133
09 (8.5)	208-3-60	14.5	98	23	13.7	83.1	21	5.8	7	1.1	8.6	None	-	-	-	48.9	50	60	52	268	51.1	60	60	55	278
												11725	12	1	33.3	90.5	100	100	90	301	92.7	100	100	93	311
												12525	18.6	1	51.6	113.4	125	125	111	319	115.6	125	125	114	329
												13225	24	1	66.6	132.2	150	150	129	334	134.4	150	150	131	344
												14225	31.8	2	88.3	124.5	125	125	120	327	127.3	150	150	123	337
	230-3-60	14.5	98	23	13.7	83.1	21	5.2	7.2	1	8.6	None	-	-	-	48.5	50	60	52	266	50.5	60	60	54	271
												11725	16	1	38.5	96.6	100	100	96	305	98.6	100	100	98	314
												12525	24.8	1	59.7	123.1	125	125	120	326	125.1	150	150	123	335
												13225	32	1	77	144.8	150	150	140	343	146.8	150	150	142	352
												14225	42.4	2	102	141.9	150	150	130	334	144.4	150	150	132	344
	460-3-60	6.3	55	10	6.2	41	10	2.9	3.6	0.5	8.6	None	-	-	-	22.8	25	25	24	140	23.8	25	25	26	142
												11746	16.5	1	19.8	47.6	50	50	47	160	48.6	50	50	48	164
												12846	27.8	1	33.4	64.6	70	70	63	173	65.6	70	70	64	178
												13346	33	1	39.7	72.4	80	80	70	180	73.4	80	80	71	184
												14246	41.7	2	50.2	69.9	70	70	63	173	71.2	80	80	64	178
	575-3-60	6	41	9	4.8	33	8	2.2	2.5	0.4	8.6	None	-	-	-	18.7	20	20	20	105	19.5	20	20	21	107
												11758	17	1	16.4	39.2	40	40	39	121	40	40	40	40	125
												13458	34	1	32.7	59.6	60	60	57	137	60.4	70	70	58	141

1. Minimum Circuit Ampacity.
2. Dual Element, Time Delay Type.
3. HACR type per NEC.
4. Non-fused Disconnect, Verify on the unit nameplate that the disconnect is properly sized for the application. Units with field installed electric heat kits may exceed the factory installed disconnect amperage rating.

XYE04-09 Medium Indoor Blower - Without Powered Convenience Outlet

Size (Tons)	Nominal Unit Voltage	Compressor 1			Compressor 2			OD Fan Motors (each)	Supply Blower Motor	Pwr Exh Motor	Pwr Conv Outlet	Electric Heat Field Installed Kit 2EK045*				MCA[1] (Amps)	Min Fuse[2]/ Breaker[3] Size (Amps)	Max Fuse[2]/ Breaker[3] Size (Amps)	Min Discon-nect Rating[4]		MCA[1] w/Pwr Exh (Amps)	Min Fuse[2]/ Breaker[3] Size w/ Pwr Exh (Amps)	Max Fuse[2]/ Breaker[3] Size w/ Pwr Exh (Amps)	Min Discon-nect Rating[4]/ Pwr Exh	
		RLA	LRA	MCC	RLA	LRA	MCC					Model	kW	Stages	Amps				FLA	LRA				FLA	LRA
04 (3)	208-1-60	15.4	83.9	24				2.3	7.6	1.5		None	-	-	-	29.2	30	40	29	122	30.7	35	45	31	125
												10625	4.9	1	23.6	58.7	60	60	56	145	60.2	70	70	58	149
												11125	7.9	1	38	76.7	80	80	73	160	78.2	80	80	75	163
	230-1-60	15.4	83.9	24				2.3	7	1.3		None	-	-	-	28.6	30	40	28	124	29.9	30	45	30	127
												10625	6.5	1	27.1	62.5	70	70	60	152	63.8	70	70	61	154
												11125	10.5	1	43.8	83.4	90	90	79	168	84.7	90	90	80	171
	208-3-60	10.4	73	16				2.3	5.2	1.1		None	-	-	-	20.5	25	30	21	100	21.6	25	30	22	103
												10625	4.9	1	13.6	37.5	40	40	36	114	38.6	40	45	37	116
												11125	7.9	1	21.9	47.9	50	50	46	122	49	50	50	47	125
												11625	12	1	33.3	62.1	70	70	59	134	63.2	70	70	60	136
	230-3-60	10.4	73	16				2.3	5.2	1		None	-	-	-	20.5	25	30	21	103	21.5	25	30	22	105
												10625	6.5	1	15.6	40	40	45	39	119	41	45	45	40	121
												11125	10.5	1	25.3	52.1	60	60	50	128	53.1	60	60	51	131
												11625	16	1	38.5	68.6	70	70	65	142	69.6	70	70	66	144
	460-3-60	5.8	38	9				1.3	2.6	0.5		None	-	-	-	11.2	15	15	11	53	11.7	15	15	12	55
												10646	6	1	7.2	20.2	25	25	19	61	20.7	25	25	20	62
												11146	11.5	1	13.8	28.5	30	30	27	67	29	30	30	28	68
												11446	14	1	16.8	32.2	35	35	30	70	32.7	35	35	31	71
	575-3-60	3.8	36.5	6				1.1	2	0.4		None	-	-	-	7.9	15	15	8	49	8.3	15	15	8	50
												11058	9.2	1	8.9	19	20	20	18	58	19.4	20	20	19	59
												11458	13.8	1	13.3	24.5	25	25	23	62	24.9	25	25	24	63
05 (4)	208-1-60	19.6	130	31				2.3	7.6	1.5		None	-	-	-	34.4	35	50	34	168	35.9	40	50	36	171
												10625	4.9	1	23.6	63.9	70	70	61	191	65.4	70	70	63	195
												11125	7.9	1	38	81.9	90	90	78	206	83.4	90	90	79	209
	230-1-60	19.6	130	31				2.3	7	1.3		None	-	-	-	33.8	35	50	33	171	35.1	40	50	35	173
												10625	6.5	1	27.1	67.7	70	80	64	198	69	70	80	66	201
												11125	10.5	1	43.8	88.6	90	90	84	214	89.9	90	90	85	217
	208-3-60	13.7	83.1	21				2.3	5.2	1.1		None	-	-	-	24.6	25	35	24	110	25.7	30	35	26	113
												10625	4.9	1	13.6	41.6	45	50	40	124	42.7	45	50	41	126
												11125	7.9	1	21.9	52	60	60	50	132	53.1	60	60	51	135
												11625	12	1	33.3	66.2	70	70	63	144	67.3	70	70	64	146
	230-3-60	13.7	83.1	21				2.3	5.2	1		None	-	-	-	24.6	25	35	24	113	25.6	30	35	26	115
												10625	6.5	1	15.6	44.1	45	50	42	129	45.1	50	50	43	131
												11125	10.5	1	25.3	56.2	60	60	53	138	57.2	60	60	55	141
												11625	16	1	38.5	72.7	80	80	69	152	73.7	80	80	70	154
	460-3-60	6.2	41	10				1.3	2.6	0.5		None	-	-	-	11.7	15	15	12	56	12.2	15	15	12	58
												10646	6	1	7.2	20.7	25	25	20	64	21.2	25	25	20	65
												11146	11.5	1	13.8	29	30	30	27	70	29.5	30	30	28	71
												11446	14	1	16.8	32.7	35	35	31	73	33.2	35	35	32	74
	575-3-60	4.8	33	8				1.1	2	0.4		None	-	-	-	9.1	15	15	9	45	9.5	15	15	10	46
												11058	9.2	1	8.9	20.2	25	25	19	54	20.6	25	25	20	55
												11458	13.8	1	13.3	25.7	30	30	24	59	26.1	30	30	25	60

XYE04-09 Medium Indoor Blower - Without Powered Convenience Outlet (Continued)

Size (Tons)	Nominal Unit Voltage	Compressor 1			Compressor 2			OD Fan Motors (each)	Supply Blower Motor	Pwr Exh Motor	Pwr Conv Outlet	Electric Heat Field Installed Kit 2EK045*				MCA[1] (Amps)	Min Fuse[2]/ Breaker[3] Size (Amps)	Max Fuse[2]/ Breaker[3] Size (Amps)	Min Discon-nect Rating[4]		MCA[1] w/Pwr Exh (Amps)	Min Fuse[2]/ Breaker[3] Size w/ Pwr Exh (Amps)	Max Fuse[2]/ Breaker[3] Size w/ Pwr Exh (Amps)	Min Discon-nect Rating[4]/ Pwr Exh	
		RLA	LRA	MCC	RLA	LRA	MCC					Model	kW	Stages	Amps				FLA	LRA				FLA	LRA
06 (5)	208-1-60	24.4	144.2	38				2.3	6.8	1.5		None	-	-	-	39.6	40	60	39	182	41.1	45	60	40	185
												10625	4.9	1	23.6	69.1	70	80	66	205	70.6	80	80	67	209
												11125	7.9	1	38	87.1	90	100	82	220	88.6	90	100	84	223
	230-1-60	24.4	144.2	38				2.3	6.2	1.3		None	-	-	-	39	40	60	38	182	40.3	45	60	39	185
												10625	6.5	1	27.1	72.9	80	90	69	209	74.2	80	90	70	212
												11125	10.5	1	43.8	93.8	100	100	88	226	95.1	100	100	90	229
	208-3-60	16	110	25				2.3	7	1.1		None	-	-	-	29.3	30	45	29	175	30.4	35	45	30	177
												10625	4.9	1	13.6	46.3	50	50	45	189	47.4	50	60	46	191
												11125	7.9	1	21.9	56.7	60	60	54	197	57.8	60	60	56	199
												11625	12	1	33.3	70.9	80	80	67	208	72	80	80	69	211
	230-3-60	16	110	25				2.3	7.2	1		None	-	-	-	29.5	30	45	29	177	30.5	35	45	30	179
												10625	6.5	1	15.6	49	50	60	47	192	50	50	60	48	195
												11125	10.5	1	25.3	61.1	70	70	58	202	62.1	70	70	60	204
												11625	16	1	38.5	77.6	80	80	74	215	78.6	80	80	75	218
	460-3-60	7.8	52	12				1.3	3.6	0.5		None	-	-	-	14.7	15	20	15	86	15.2	20	20	15	87
												10646	6	1	7.2	23.7	25	25	23	93	24.2	25	25	23	94
												11146	11.5	1	13.8	32	35	35	30	100	32.5	35	35	31	101
												11446	14	1	16.8	35.7	40	40	34	103	36.2	40	40	35	104
	575-3-60	5.7	38.9	9				1.1	2.5	0.4		None	-	-	-	10.7	15	15	11	59	11.1	15	15	11	60
												11458	13.8	1	13.3	27.3	30	30	26	72	27.7	30	30	26	73
												12358	23	1	22.1	38.3	40	40	36	81	38.7	40	40	37	82
07 (6)	208-3-60	19.6	136	31				2.3	7.5	1.1		None	-	-	-	36.6	40	50	36	204	38.8	40	50	39	214
												10725	4.9	1	13.6	53.6	60	60	52	218	55.8	60	70	55	228
												11725	12	1	33.3	78.2	80	80	75	237	80.4	90	90	77	247
												12525	18.6	1	51.6	101.1	110	110	96	256	103.3	110	110	98	266
	230-3-60	19.6	136	31				2.3	7.5	1		None	-	-	-	36.6	40	50	36	211	38.6	40	50	39	206
												10725	6.5	1	15.6	56.1	60	70	54	227	58.1	60	70	57	236
												11725	16	1	38.5	84.7	90	90	81	250	86.7	90	90	83	259
												12525	24.8	1	59.7	111.2	125	125	105	271	113.2	125	125	107	280
	460-3-60	8.2	66.1	13				1.3	3.4	0.5		None	-	-	-	16.3	20	20	16	105	17.3	20	20	17	102
												10746	6	1	7.2	25.3	30	30	25	112	26.3	30	30	26	117
												11746	16.5	1	19.8	41.1	45	45	39	125	42.1	45	45	40	129
												12646	25.5	1	30.7	54.7	60	60	52	136	55.7	60	60	53	140
	575-3-60	6.6	55.3	10				1.1	2.8	0.4		None	-	-	-	13.3	15	15	13	87	14.1	15	15	14	84
												11758	17	1	16.4	33.8	35	35	32	103	34.6	35	35	33	107
												12658	25.7	1	24.7	44.2	45	45	42	111	45	45	45	43	115
A7 (6)	208-3-60	17.6	136	27				4.4	7.5	1.1		None	-	-	-	33.9	35	50	34	185	36.1	40	50	36	190
												10725	4.9	1	13.6	50.9	60	60	50	198	53.1	60	60	52	203
												11725	12	1	33.3	75.5	80	80	72	218	77.7	80	80	75	223
												12525	18.6	1	51.6	98.4	100	100	93	236	100.6	110	110	96	241
	230-3-60	17.6	136	27				4.4	7.5	1		None	-	-	-	33.9	35	50	34	191	35.9	40	50	36	196
												10725	6.5	1	15.6	53.4	60	60	52	207	55.4	60	60	54	211
												11725	16	1	38.5	82	90	90	78	230	84	90	90	81	234
												12525	24.8	1	59.7	108.5	110	110	103	251	110.5	125	125	105	255
	460-3-60	8.5	66.1	13				2.5	3.4	0.5		None	-	-	-	19	20	25	19	94	20	20	25	21	96
												10746	6	1	7.2	28	30	30	28	101	29	30	30	29	103
												11746	16.5	1	19.8	43.8	45	45	42	113	44.8	45	45	43	116
												12646	25.5	1	30.7	57.4	60	60	55	124	58.4	60	60	56	127
	575-3-60	6.3	55.3	10				4.4	2.8	0.4		None	-	-	-	19.5	20	25	21	77	20.3	25	25	22	79
												11758	17	1	16.4	40	40	40	39	94	40.8	45	45	40	96
												12658	25.7	1	24.7	50.4	60	60	49	102	51.2	60	60	50	104

XYE04-09 Medium Indoor Blower - Without Powered Convenience Outlet (Continued)

Size (Tons)	Nominal Unit Voltage	Compressor 1			Compressor 2			OD Fan Motors (each)	Supply Blower Motor	Pwr Exh Motor	Pwr Conv Outlet	Electric Heat Field Installed Kit 2EK045*				MCA[1] (Amps)	Min Fuse[2]/ Breaker[3] Size (Amps)	Max Fuse[2]/ Breaker[3] Size (Amps)	Min Discon-nect Rating[4]		MCA[1] w/Pwr Exh (Amps)	Min Fuse[2]/ Breaker[3] Size w/ Pwr Exh (Amps)	Max Fuse[2]/ Breaker[3] Size w/ Pwr Exh (Amps)	Min Discon-nect Rating[4]/ Pwr Exh	
		RLA	LRA	MCC	RLA	LRA	MCC					Model	kW	Stages	Amps				FLA	LRA				FLA	LRA
08 (7.5)	208-3-60	13.8	83.1	22	13.6	83.1	21	5.8	5.2	1.1		None	-	-	-	41.9	45	50	44	211	44.1	45	50	47	221
												11725	12	1	33.3	83.5	90	90	82	244	85.7	90	90	85	254
												12525	18.6	1	51.6	106.4	110	110	104	262	108.6	110	110	106	272
												13225	24	1	66.6	125.2	150	150	121	277	127.4	150	150	123	287
												14225	31.8	2	88.3	116.9	125	125	112	270	119.6	125	125	115	280
	230-3-60	13.8	83.1	22	13.6	83.1	21	5.2	5.2	1		None	-	-	-	41.3	45	50	43	210	43.3	45	50	46	215
												11725	16	1	38.5	89.4	90	90	88	249	91.4	100	100	90	258
												12525	24.8	1	59.7	115.9	125	125	112	270	117.9	125	125	114	279
												13225	32	1	77	137.6	150	150	132	287	139.6	150	150	134	296
												14225	42.4	2	102	134	150	150	122	278	136.5	150	150	124	288
	460-3-60	6.2	41	10	6.1	41	10	2.9	2.6	0.5		None	-	-	-	19.4	20	25	20	106	20.4	25	25	22	108
												11746	16.5	1	19.8	44.2	45	45	43	125	45.2	50	50	44	130
												12846	27.8	1	33.4	61.2	70	70	59	139	62.2	70	70	60	143
												13346	33	1	39.7	69	70	70	66	145	70	70	70	67	150
												14246	41.7	2	50.2	66	70	70	59	139	67.3	70	70	60	143
	575-3-60	4.9	33	8	4.2	33	7	2.2	2	0.4		None	-	-	-	14.5	15	15	15	87	15.3	20	20	16	89
												11758	17	1	16.4	35	35	35	34	104	35.8	40	40	35	107
												13458	34	1	32.7	55.4	60	60	53	120	56.2	60	60	54	124
09 (8.5)	208-3-60	14.5	98	23	13.7	83.1	21	5.8	5.2	1.1		None	-	-	-	42.8	45	50	45	226	45	45	50	48	236
												11725	12	1	33.3	84.4	90	90	83	259	86.6	90	90	86	269
												12525	18.6	1	51.6	107.3	110	110	104	277	109.5	110	110	107	287
												13225	24	1	66.6	126.1	150	150	122	292	128.3	150	150	124	302
												14225	31.8	2	88.3	116.9	125	125	113	285	119.6	125	125	116	295
	230-3-60	14.5	98	23	13.7	83.1	21	5.2	5.2	1		None	-	-	-	42.2	45	50	44	225	44.2	45	50	47	230
												11725	16	1	38.5	90.3	100	100	89	264	92.3	100	100	91	273
												12525	24.8	1	59.7	116.8	125	125	113	285	118.8	125	125	115	294
												13225	32	1	77	138.5	150	150	133	302	140.5	150	150	135	311
												14225	42.4	2	102	134	150	150	123	293	136.5	150	150	125	302
	460-3-60	6.3	55	10	6.2	41	10	2.9	2.6	0.5		None	-	-	-	19.6	20	25	21	120	20.6	25	25	22	122
												11746	16.5	1	19.8	44.4	45	45	43	139	45.4	50	50	45	144
												12846	27.8	1	33.4	61.4	70	70	59	153	62.4	70	70	60	157
												13346	33	1	39.7	69.2	70	70	66	159	70.2	80	80	68	164
												14246	41.7	2	50.2	66	70	70	59	153	67.3	70	70	60	157
	575-3-60	6	41	9	4.8	33	8	2.2	2	0.4		None	-	-	-	16.5	20	20	17	95	17.3	20	20	18	97
												11758	17	1	16.4	37	40	40	36	112	37.8	40	40	37	115
												13458	34	1	32.7	57.4	60	60	55	128	58.2	60	60	56	132
With VFD																									
A7 (6)	208-3-60	17.6	136	27				4.4	8.9	1.1		None	-	-	-	35.3	40	50	36	198	37.5	40	50	38	203
												10725	4.9	1	13.6	52.3	60	60	51	211	54.5	60	60	54	216
												11725	12	1	33.3	76.9	80	80	74	231	79.1	80	80	76	236
												12525	18.6	1	51.6	99.8	100	100	95	249	102	110	110	97	254
	230-3-60	17.6	136	27				4.4	8.2	1		None	-	-	-	34.6	35	50	35	205	36.6	40	50	37	210
												10725	6.5	1	15.6	54.1	60	60	53	221	56.1	60	60	55	225
												11725	16	1	38.5	82.7	90	90	79	244	84.7	90	90	81	248
												12525	24.8	1	59.7	109.2	110	110	103	265	111.2	125	125	106	269
	460-3-60	8.5	66.1	13				2.5	4.1	0.5		None	-	-	-	19.7	20	25	20	101	20.7	25	25	21	103
												10746	6	1	7.2	28.7	30	35	29	108	29.7	30	35	30	110
												11746	16.5	1	19.8	44.5	45	45	43	120	45.5	50	50	44	123
												12646	25.5	1	30.7	58.1	60	60	56	131	59.1	60	60	57	134
	575-3-60	6.3	55.3	10				4.4	3.2	0.4		None	-	-	-	19.9	20	25	21	81	20.7	25	25	22	83
												11758	17	1	16.4	40.4	45	45	40	98	41.2	45	45	41	100
												12658	25.7	1	24.7	50.8	60	60	49	106	51.6	60	60	50	108

XYE04-09 Medium Indoor Blower - Without Powered Convenience Outlet (Continued)

Size (Tons)	Nominal Unit Voltage	Compressor 1			Compressor 2			OD Fan Motors (each)	Supply Blower Motor	Pwr Exh Motor	Pwr Conv Outlet	Electric Heat Field Installed Kit 2EK045*				MCA[1] (Amps)	Min Fuse[2]/ Breaker[3] Size (Amps)	Max Fuse[2]/ Breaker[3] Size (Amps)	Min Discon-nect Rating[4]		MCA[1] w/Pwr Exh (Amps)	Min Fuse[2]/ Breaker[3] Size w/ Pwr Exh (Amps)	Max Fuse[2]/ Breaker[3] Size w/ Pwr Exh (Amps)	Min Discon-nect Rating[4]/ Pwr Exh	
		RLA	LRA	MCC	RLA	LRA	MCC					Model	kW	Stages	Amps				FLA	LRA				FLA	LRA
08 (7.5)	208-3-60	13.8	83.1	22	13.6	83.1	21	5.8	7	1.1		None	-	-	-	43.7	45	50	46	248	45.9	50	50	49	258
												11725	12	1	33.3	85.3	90	90	85	282	87.5	90	90	87	292
												12525	18.6	1	51.6	108.2	110	110	106	300	110.4	125	125	108	310
												13225	24	1	66.6	127	150	150	123	315	129.2	150	150	125	325
												14225	31.8	2	88.3	119.1	125	125	114	307	121.9	125	125	117	317
	230-3-60	13.8	83.1	22	13.6	83.1	21	5.2	7.2	1		None	-	-	-	43.3	45	50	46	247	45.3	50	50	48	252
												11725	16	1	38.5	91.4	100	100	90	286	93.4	100	100	92	295
												12525	24.8	1	59.7	117.9	125	125	114	307	119.9	125	125	117	316
												13225	32	1	77	139.6	150	150	134	324	141.6	150	150	137	333
												14225	42.4	2	102	136.5	150	150	124	315	139	150	150	126	324
	460-3-60	6.2	41	10	6.1	41	10	2.9	3.6	0.5		None	-	-	-	20.4	25	25	22	124	21.4	25	25	23	126
												11746	16.5	1	19.8	45.2	50	50	44	144	46.2	50	50	46	148
												12846	27.8	1	33.4	62.2	70	70	60	157	63.2	70	70	61	162
												13346	33	1	39.7	70	70	70	67	164	71	80	80	68	168
												14246	41.7	2	50.2	67.3	70	70	60	157	68.5	70	70	61	162
	575-3-60	4.9	33	8	4.2	33	7	2.2	2.5	0.4		None	-	-	-	15	20	20	16	95	15.8	20	20	17	97
												11758	17	1	16.4	35.5	40	40	35	111	36.3	40	40	36	115
												13458	34	1	32.7	55.9	60	60	53	128	56.7	60	60	54	131
09 (8.5)	208-3-60	14.5	98	23	13.7	83.1	21	5.8	7	1.1		None	-	-	-	44.6	45	50	47	263	46.8	50	60	50	273
												11725	12	1	33.3	86.2	90	90	85	297	88.4	90	90	88	307
												12525	18.6	1	51.6	109.1	110	110	106	315	111.3	125	125	109	325
												13225	24	1	66.6	127.9	150	150	124	330	130.1	150	150	126	340
												14225	31.8	2	88.3	119.1	125	125	115	322	121.9	125	125	118	332
	230-3-60	14.5	98	23	13.7	83.1	21	5.2	7.2	1		None	-	-	-	44.2	45	50	47	262	46.2	50	60	49	267
												11725	16	1	38.5	92.3	100	100	91	300	94.3	100	100	93	310
												12525	24.8	1	59.7	118.8	125	125	115	322	120.8	125	125	118	331
												13225	32	1	77	140.5	150	150	135	339	142.5	150	150	138	348
												14225	42.4	2	102	136.5	150	150	125	330	139	150	150	127	339
	460-3-60	6.3	55	10	6.2	41	10	2.9	3.6	0.5		None	-	-	-	20.6	25	25	22	138	21.6	25	25	23	140
												11746	16.5	1	19.8	45.4	50	50	45	158	46.4	50	50	46	162
												12846	27.8	1	33.4	62.4	70	70	60	171	63.4	70	70	61	176
												13346	33	1	39.7	70.2	80	80	68	178	71.2	80	80	69	182
												14246	41.7	2	50.2	67.3	70	70	60	171	68.5	70	70	61	176
	575-3-60	6	41	9	4.8	33	8	2.2	2.5	0.4		None	-	-	-	17	20	20	18	103	17.8	20	20	19	105
												11758	17	1	16.4	37.5	40	40	37	119	38.3	40	40	38	123
												13458	34	1	32.7	57.9	60	60	55	136	58.7	60	60	56	139

1. Minimum Circuit Ampacity.
2. Dual Element, Time Delay Type.
3. HACR type per NEC.
4. Non-fused Disconnect, Verify on the unit nameplate that the disconnect is properly sized for the application. Units with field installed electric heat kits may exceed the factory installed disconnect amperage rating.

XYE04-09 Medium Indoor Blower - With Powered Convenience Outlet

Size (Tons)	Nominal Unit Voltage	Compressor 1			Compressor 2			OD Fan Motors (each)	Supply Blower Motor	Pwr Exh Motor	Pwr Conv Outlet	Electric Heat Field Installed Kit 2EK045*				MCA[1] (Amps)	Min Fuse[2]/ Breaker[3] Size (Amps)	Max Fuse[2]/ Breaker[3] Size (Amps)	Min Discon-nect Rating[4]		MCA[1] w/Pwr Exh (Amps)	Min Fuse[2]/ Breaker[3] Size w/ Pwr Exh (Amps)	Max Fuse[2]/ Breaker[3] Size w/ Pwr Exh (Amps)	Min Discon-nect Rating[4]/ Pwr Exh	
		RLA	LRA	MCC	RLA	LRA	MCC					Model	kW	Stages	Amps				FLA	LRA				FLA	LRA
04 (3)	208-1-60	15.4	83.9	24				2.3	7.6	1.5	8.6	None	-	-	-	33.5	35	45	34	126	35	35	50	36	129
												10625	4.9	1	23.6	63	70	70	61	150	64.5	70	70	63	153
												11125	7.9	1	38	81	90	90	78	164	82.5	90	90	79	167
	230-1-60	15.4	83.9	24				2.3	7	1.3	8.6	None	-	-	-	32.9	35	45	33	129	34.2	35	45	35	132
												10625	6.5	1	27.1	66.8	70	70	65	156	68.1	70	70	66	159
												11125	10.5	1	43.8	87.7	90	90	84	173	89	90	90	85	175
	208-3-60	10.4	73	16				2.3	5.2	1.1	8.6	None	-	-	-	24.8	25	35	26	105	25.9	30	35	27	107
												10625	4.9	1	13.6	41.8	45	45	41	118	42.9	45	45	42	121
												11125	7.9	1	21.9	52.2	60	60	51	126	53.3	60	60	52	129
												11625	12	1	33.3	66.4	70	70	64	138	67.5	70	70	65	140
	230-3-60	10.4	73	16				2.3	5.2	1	8.6	None	-	-	-	24.8	25	35	26	107	25.8	30	35	27	110
												10625	6.5	1	15.6	44.3	45	50	43	123	45.3	50	50	45	125
												11125	10.5	1	25.3	56.4	60	60	55	133	57.4	60	60	56	135
												11625	16	1	38.5	72.9	80	80	70	146	73.9	80	80	71	148
	460-3-60	5.8	38	9				1.3	2.6	0.5	8.6	None	-	-	-	13.4	15	15	14	56	13.9	15	15	14	57
												10646	6	1	7.2	22.4	25	25	22	63	22.9	25	25	23	64
												11146	11.5	1	13.8	30.7	35	35	30	69	31.2	35	35	30	70
												11446	14	1	16.8	34.4	35	35	33	72	34.9	35	35	34	73
	575-3-60	3.8	36.5	6				1.1	2	0.4	8.6	None	-	-	-	9.6	15	15	10	51	10	15	15	10	51
												11058	9.2	1	8.9	20.7	25	25	20	59	21.1	25	25	21	60
												11458	13.8	1	13.3	26.2	30	30	25	64	26.6	30	30	26	65
05 (4)	208-1-60	19.6	130	31				2.3	7.6	1.5	8.6	None	-	-	-	38.7	40	50	39	172	40.2	45	50	41	176
												10625	4.9	1	23.6	68.2	70	80	66	196	69.7	70	80	68	199
												11125	7.9	1	38	86.2	90	90	83	210	87.7	90	90	84	214
	230-1-60	19.6	130	31				2.3	7	1.3	8.6	None	-	-	-	38.1	40	50	38	175	39.4	40	50	40	178
												10625	6.5	1	27.1	72	80	80	69	202	73.3	80	80	71	205
												11125	10.5	1	43.8	92.9	100	100	89	219	94.2	100	100	90	222
	208-3-60	13.7	83.1	21				2.3	5.2	1.1	8.6	None	-	-	-	28.9	30	40	29	115	30	30	40	31	117
												10625	4.9	1	13.6	45.9	50	50	45	128	47	50	50	46	131
												11125	7.9	1	21.9	56.3	60	60	55	137	57.4	60	60	56	139
												11625	12	1	33.3	70.5	80	80	68	148	71.6	80	80	69	150
	230-3-60	13.7	83.1	21				2.3	5.2	1	8.6	None	-	-	-	28.9	30	40	29	117	29.9	30	40	30	120
												10625	6.5	1	15.6	48.4	50	50	47	133	49.4	50	50	48	135
												11125	10.5	1	25.3	60.5	70	70	58	143	61.5	70	70	60	145
												11625	16	1	38.5	77	80	80	74	156	78	80	80	75	158
	460-3-60	6.2	41	10				1.3	2.6	0.5	8.6	None	-	-	-	13.9	15	20	14	59	14.4	15	20	15	60
												10646	6	1	7.2	22.9	25	25	22	66	23.4	25	25	23	67
												11146	11.5	1	13.8	31.2	35	35	30	72	31.7	35	35	31	73
												11446	14	1	16.8	34.9	35	35	33	75	35.4	40	40	34	76
	575-3-60	4.8	33	8				1.1	2	0.4	8.6	None	-	-	-	10.8	15	15	11	47	11.2	15	15	12	48
												11058	9.2	1	8.9	21.9	25	25	21	56	22.3	25	25	22	57
												11458	13.8	1	13.3	27.4	30	30	26	60	27.8	30	30	27	61

XYE04-09 Medium Indoor Blower - With Powered Convenience Outlet (Continued)

Size (Tons)	Nominal Unit Voltage	Compressor 1			Compressor 2			OD Fan Motors (each)	Supply Blower Motor	Pwr Exh Motor	Pwr Conv Outlet	Electric Heat Field Installed Kit 2EK045*				MCA[1] (Amps)	Min Fuse[2]/ Breaker[3] Size (Amps)	Max Fuse[2]/ Breaker[3] Size (Amps)	Min Discon-nect Rating[4]		MCA[1] w/Pwr Exh (Amps)	Min Fuse[2]/ Breaker[3] Size w/ Pwr Exh (Amps)	Max Fuse[2]/ Breaker[3] Size w/ Pwr Exh (Amps)	Min Discon-nect Rating[4]/ Pwr Exh	
		RLA	LRA	MCC	RLA	LRA	MCC					Model	kW	Stages	Amps				FLA	LRA				FLA	LRA
06 (5)	208-1-60	24.4	144.2	38				2.3	6.8	1.5	8.6	None	-	-	-	43.9	45	60	43	186	45.4	50	60	45	189
												10625	4.9	1	23.6	73.4	80	90	71	209	74.9	80	90	72	213
												11125	7.9	1	38	91.4	100	100	87	224	92.9	100	100	89	227
	230-1-60	24.4	144.2	38				2.3	6.2	1.3	8.6	None	-	-	-	43.3	45	60	43	187	44.6	45	60	44	189
												10625	6.5	1	27.1	77.2	80	90	74	214	78.5	80	90	75	217
												11125	10.5	1	43.8	98.1	100	110	93	230	99.4	100	110	95	233
	208-3-60	16	110	25				2.3	7	1.1	8.6	None	-	-	-	33.6	35	45	34	179	34.7	35	50	35	182
												10625	4.9	1	13.6	50.6	60	60	50	193	51.7	60	60	51	195
												11125	7.9	1	21.9	61	70	70	59	201	62.1	70	70	60	204
												11625	12	1	33.3	75.2	80	80	72	213	76.3	80	80	74	215
	230-3-60	16	110	25				2.3	7.2	1	8.6	None	-	-	-	33.8	35	45	34	181	34.8	35	50	35	183
												10625	6.5	1	15.6	53.3	60	60	52	197	54.3	60	60	53	199
												11125	10.5	1	25.3	65.4	70	70	63	206	66.4	70	70	65	209
												11625	16	1	38.5	81.9	90	90	79	220	82.9	90	90	80	222
	460-3-60	7.8	52	12				1.3	3.6	0.5	8.6	None	-	-	-	16.9	20	20	17	88	17.4	20	20	18	89
												10646	6	1	7.2	25.9	30	30	25	95	26.4	30	30	26	96
												11146	11.5	1	13.8	34.2	35	35	33	102	34.7	35	35	34	103
												11446	14	1	16.8	37.9	40	40	36	105	38.4	40	40	37	106
	575-3-60	5.7	38.9	9				1.1	2.5	0.4	8.6	None	-	-	-	12.4	15	15	13	61	12.8	15	15	13	62
												11458	13.8	1	13.3	29	30	30	28	74	29.4	30	30	28	75
												12358	23	1	22.1	40	40	40	38	83	40.4	45	45	39	84
07 (6)	208-3-60	19.6	136	31				2.3	7.5	1.1	8.6	None	-	-	-	40.9	45	60	41	208	43.1	45	60	44	218
												10725	4.9	1	13.6	57.9	60	70	57	222	60.1	70	70	60	232
												11725	12	1	33.3	82.5	90	90	80	242	84.7	90	90	82	252
												12525	18.6	1	51.6	105.4	110	110	101	260	107.6	110	110	103	270
	230-3-60	19.6	136	31				2.3	7.5	1	8.6	None	-	-	-	40.9	45	60	41	215	42.9	45	60	44	210
												10725	6.5	1	15.6	60.4	70	70	59	231	62.4	70	70	62	240
												11725	16	1	38.5	89	90	90	86	254	91	100	100	88	263
												12525	24.8	1	59.7	115.5	125	125	110	275	117.5	125	125	112	284
	460-3-60	8.2	66.1	13				1.3	3.4	0.5	8.6	None	-	-	-	18.5	20	25	19	107	19.5	20	25	20	104
												10746	6	1	7.2	27.5	30	30	27	115	28.5	30	30	28	119
												11746	16.5	1	19.8	43.3	45	45	42	127	44.3	45	45	43	132
												12646	25.5	1	30.7	56.9	60	60	54	138	57.9	60	60	55	142
	575-3-60	6.6	55.3	10				1.1	2.8	0.4	8.6	None	-	-	-	15	20	20	15	88	15.8	20	20	16	86
												11758	17	1	16.4	35.5	40	40	34	105	36.3	40	40	35	108
												12658	25.7	1	24.7	45.9	50	50	44	113	46.7	50	50	45	117
	575-3-60	6.6	55.3	10				1.1	2.8	0.4	8.6	None	-	-	-	15	20	20	15	88	15.8	20	20	16	86
												11758	17	1	16.4	35.5	40	40	34	105	36.3	40	40	35	108
												12658	25.7	1	24.7	45.9	50	50	44	113	46.7	50	50	45	117
A7 (6)	208-3-60	17.6	136	27				4.4	7.5	1.1	8.6	None	-	-	-	38.2	40	50	39	189	40.4	45	50	41	194
												10725	4.9	1	13.6	55.2	60	60	55	203	57.4	60	70	57	208
												11725	12	1	33.3	79.8	80	80	77	222	82	90	90	80	227
												12525	18.6	1	51.6	102.7	110	110	98	241	104.9	110	110	101	246
	230-3-60	17.6	136	27				4.4	7.5	1	8.6	None	-	-	-	38.2	40	50	39	195	40.2	45	50	41	200
												10725	6.5	1	15.6	57.7	60	70	57	211	59.7	60	70	59	216
												11725	16	1	38.5	86.3	90	90	83	234	88.3	90	90	85	238
												12525	24.8	1	59.7	112.8	125	125	108	255	114.8	125	125	110	260
	460-3-60	8.5	66.1	13				2.5	3.4	0.5	8.6	None	-	-	-	21.2	25	25	22	96	22.2	25	25	23	98
												10746	6	1	7.2	30.2	35	35	30	103	31.2	35	35	31	105
												11746	16.5	1	19.8	46	50	50	45	116	47	50	50	46	118
												12646	25.5	1	30.7	59.6	60	60	57	126	60.6	70	70	58	129
	575-3-60	6.3	55.3	10				4.4	2.8	0.4	8.6	None	-	-	-	21.2	25	25	23	79	22	25	25	23	81
												11758	17	1	16.4	41.7	45	45	41	95	42.5	45	45	42	97
												12658	25.7	1	24.7	52.1	60	60	51	104	52.9	60	60	52	106
	208-3-60	17.6	136	27				4.4	7.5	1.1	8.6	None	-	-	-	38.2	40	50	39	189	40.4	45	50	41	194
												10725	4.9	1	13.6	55.2	60	60	55	203	57.4	60	70	57	208
												11725	12	1	33.3	79.8	80	80	77	222	82	90	90	80	227

XYE04-09 Medium Indoor Blower - With Powered Convenience Outlet (Continued)

Size (Tons)	Nominal Unit Voltage	Compressor 1			Compressor 2			OD Fan Motors (each)	Supply Blower Motor	Pwr Exh Motor	Pwr Conv Outlet	Electric Heat Field Installed Kit 2EK045*				MCA[1] (Amps)	Min Fuse[2]/ Breaker[3] Size (Amps)	Max Fuse[2]/ Breaker[3] Size (Amps)	Min Discon-nect Rating[4]		MCA[1] w/Pwr Exh (Amps)	Min Fuse[2]/ Breaker[3] Size w/ Pwr Exh (Amps)	Max Fuse[2]/ Breaker[3] Size w/ Pwr Exh (Amps)	Min Discon-nect Rating[4]/ Pwr Exh	
		RLA	LRA	MCC	RLA	LRA	MCC					Model	kW	Stages	Amps				FLA	LRA				FLA	LRA
08 (7.5)	208-3-60	13.8	83.1	22	13.6	83.1	21	5.8	5.2	1.1	8.6	None	-	-	-	46.2	50	50	49	215	48.4	50	60	52	225
												11725	12	1	33.3	87.8	90	90	87	248	90	90	90	90	258
												12525	18.6	1	51.6	110.7	125	125	108	267	112.9	125	125	111	277
												13225	24	1	66.6	129.5	150	150	126	282	131.7	150	150	128	292
												14225	31.8	2	88.3	122.3	125	125	117	274	125	150	150	120	284
	230-3-60	13.8	83.1	22	13.6	83.1	21	5.2	5.2	1	8.6	None	-	-	-	45.6	50	50	48	215	47.6	50	60	51	219
												11725	16	1	38.5	93.7	100	100	93	253	95.7	100	100	95	262
												12525	24.8	1	59.7	120.2	125	125	117	274	122.2	125	125	119	283
												13225	32	1	77	141.9	150	150	137	292	143.9	150	150	139	301
												14225	42.4	2	102	139.4	150	150	127	283	141.9	150	150	129	292
	460-3-60	6.2	41	10	6.1	41	10	2.9	2.6	0.5	8.6	None	-	-	-	21.6	25	25	23	108	22.6	25	25	24	110
												11746	16.5	1	19.8	46.4	50	50	46	127	47.4	50	50	47	132
												12846	27.8	1	33.4	63.4	70	70	61	141	64.4	70	70	63	145
												13346	33	1	39.7	71.2	80	80	69	147	72.2	80	80	70	152
												14246	41.7	2	50.2	68.7	70	70	61	141	69.9	70	70	63	145
	575-3-60	4.9	33	8	4.2	33	7	2.2	2	0.4	8.6	None	-	-	-	16.2	20	20	17	89	17	20	20	18	91
												11758	17	1	16.4	36.7	40	40	36	105	37.5	40	40	37	109
												13458	34	1	32.7	57.1	60	60	55	122	57.9	60	60	56	125
09 (8.5)	208-3-60	14.5	98	23	13.7	83.1	21	5.8	5.2	1.1	8.6	None	-	-	-	47.1	50	60	50	230	49.3	50	60	53	240
												11725	12	1	33.3	88.7	90	90	88	263	90.9	100	100	91	273
												12525	18.6	1	51.6	111.6	125	125	109	281	113.8	125	125	112	291
												13225	24	1	66.6	130.4	150	150	127	296	132.6	150	150	129	306
												14225	31.8	2	88.3	122.3	125	125	118	289	125	150	150	121	299
	230-3-60	14.5	98	23	13.7	83.1	21	5.2	5.2	1	8.6	None	-	-	-	46.5	50	60	49	229	48.5	50	60	52	234
												11725	16	1	38.5	94.6	100	100	94	268	96.6	100	100	96	277
												12525	24.8	1	59.7	121.1	125	125	118	289	123.1	125	125	120	298
												13225	32	1	77	142.8	150	150	138	306	144.8	150	150	140	316
												14225	42.4	2	102	139.4	150	150	128	298	141.9	150	150	130	307
	460-3-60	6.3	55	10	6.2	41	10	2.9	2.6	0.5	8.6	None	-	-	-	21.8	25	25	23	122	22.8	25	25	24	124
												11746	16.5	1	19.8	46.6	50	50	46	141	47.6	50	50	47	146
												12846	27.8	1	33.4	63.6	70	70	62	155	64.6	70	70	63	159
												13346	33	1	39.7	71.4	80	80	69	161	72.4	80	80	70	166
												14246	41.7	2	50.2	68.7	70	70	62	155	69.9	70	70	63	159
	575-3-60	6	41	9	4.8	33	8	2.2	2	0.4	8.6	None	-	-	-	18.2	20	20	19	97	19	20	20	20	99
												11758	17	1	16.4	38.7	40	40	38	113	39.5	40	40	39	117
												13458	34	1	32.7	59.1	60	60	57	130	59.9	60	60	58	133
With VFD																									
A7 (6)	208-3-60	17.6	136	27				4.4	8.9	1.1	8.6	None	-	-	-	39.6	40	50	40	202	41.8	45	50	43	207
												10725	4.9	1	13.6	56.6	60	70	56	216	58.8	60	70	59	221
												11725	12	1	33.3	81.2	90	90	79	235	83.4	90	90	81	240
												12525	18.6	1	51.6	104.1	110	110	100	254	106.3	110	110	102	259
	230-3-60	17.6	136	27				4.4	8.2	1	8.6	None	-	-	-	38.9	40	50	40	209	40.9	45	50	42	214
												10725	6.5	1	15.6	58.4	60	70	58	225	60.4	70	70	60	230
												11725	16	1	38.5	87	90	90	84	248	89	90	90	86	252
												12525	24.8	1	59.7	113.5	125	125	108	269	115.5	125	125	111	274
	460-3-60	8.5	66.1	13				2.5	4.1	0.5	8.6	None	-	-	-	21.9	25	30	23	103	22.9	25	30	24	105
												10746	6	1	7.2	30.9	35	35	31	110	31.9	35	35	32	112
												11746	16.5	1	19.8	46.7	50	50	46	123	47.7	50	50	47	125
												12646	25.5	1	30.7	60.3	70	70	58	133	61.3	70	70	59	136
	575-3-60	6.3	55.3	10				4.4	3.2	0.4	8.6	None	-	-	-	21.6	25	25	23	83	22.4	25	25	24	85
												11758	17	1	16.4	42.1	45	45	42	100	42.9	45	45	43	101
												12658	25.7	1	24.7	52.5	60	60	51	108	53.3	60	60	52	110
	208-3-60	17.6	136	27				4.4	8.9	1.1	8.6	None	-	-	-	39.6	40	50	40	202	41.8	45	50	43	207
												10725	4.9	1	13.6	56.6	60	70	56	216	58.8	60	70	59	221
												11725	12	1	33.3	81.2	90	90	79	235	83.4	90	90	81	240

XYE04-09 Medium Indoor Blower - With Powered Convenience Outlet (Continued)

Size (Tons)	Nominal Unit Voltage	Compressor 1			Compressor 2			OD Fan Motors (each)	Supply Blower Motor	Pwr Exh Motor	Pwr Conv Outlet	Electric Heat Field Installed Kit 2EK045*				MCA[1] (Amps)	Min Fuse[2]/ Breaker[3] Size (Amps)	Max Fuse[2]/ Breaker[3] Size (Amps)	Min Discon-nect Rating[4]		MCA[1] w/Pwr Exh (Amps)	Min Fuse[2]/ Breaker[3] Size w/ Pwr Exh (Amps)	Max Fuse[2]/ Breaker[3] Size w/ Pwr Exh (Amps)	Min Discon-nect Rating[4]/ Pwr Exh	
		RLA	LRA	MCC	RLA	LRA	MCC					Model	kW	Stages	Amps				FLA	LRA				FLA	LRA
08 (7.5)	208-3-60	13.8	83.1	22	13.6	83.1	21	5.8	7	1.1	8.6	None	-	-	-	48	50	60	51	253	50.2	60	60	54	263
												11725	12	1	33.3	89.6	90	90	89	286	91.8	100	100	92	296
												12525	18.6	1	51.6	112.5	125	125	111	304	114.7	125	125	113	314
												13225	24	1	66.6	131.3	150	150	128	319	133.5	150	150	130	329
												14225	31.8	2	88.3	124.5	125	125	119	312	127.3	150	150	122	322
	230-3-60	13.8	83.1	22	13.6	83.1	21	5.2	7.2	1	8.6	None	-	-	-	47.6	50	60	51	251	49.6	50	60	53	256
												11725	16	1	38.5	95.7	100	100	95	290	97.7	100	100	97	299
												12525	24.8	1	59.7	122.2	125	125	119	311	124.2	125	125	122	320
												13225	32	1	77	143.9	150	150	139	328	145.9	150	150	142	338
												14225	42.4	2	102	141.9	150	150	129	319	144.4	150	150	131	329
	460-3-60	6.2	41	10	6.1	41	10	2.9	3.6	0.5	8.6	None	-	-	-	22.6	25	25	24	126	23.6	25	25	25	128
												11746	16.5	1	19.8	47.4	50	50	47	146	48.4	50	50	48	150
												12846	27.8	1	33.4	64.4	70	70	63	159	65.4	70	70	64	164
												13346	33	1	39.7	72.2	80	80	70	166	73.2	80	80	71	170
												14246	41.7	2	50.2	69.9	70	70	63	159	71.2	80	80	64	164
	575-3-60	4.9	33	8	4.2	33	7	2.2	2.5	0.4	8.6	None	-	-	-	16.7	20	20	18	97	17.5	20	20	19	99
												11758	17	1	16.4	37.2	40	40	37	113	38	40	40	38	117
												13458	34	1	32.7	57.6	60	60	55	129	58.4	60	60	56	133
09 (8.5)	208-3-60	14.5	98	23	13.7	83.1	21	5.8	7	1.1	8.6	None	-	-	-	48.9	50	60	52	268	51.1	60	60	55	278
												11725	12	1	33.3	90.5	100	100	90	301	92.7	100	100	93	311
												12525	18.6	1	51.6	113.4	125	125	111	319	115.6	125	125	114	329
												13225	24	1	66.6	132.2	150	150	129	334	134.4	150	150	131	344
												14225	31.8	2	88.3	124.5	125	125	120	327	127.3	150	150	123	337
	230-3-60	14.5	98	23	13.7	83.1	21	5.2	7.2	1	8.6	None	-	-	-	48.5	50	60	52	266	50.5	60	60	54	271
												11725	16	1	38.5	96.6	100	100	96	305	98.6	100	100	98	314
												12525	24.8	1	59.7	123.1	125	125	120	326	125.1	150	150	123	335
												13225	32	1	77	144.8	150	150	140	343	146.8	150	150	142	352
												14225	42.4	2	102	141.9	150	150	130	334	144.4	150	150	132	344
	460-3-60	6.3	55	10	6.2	41	10	2.9	3.6	0.5	8.6	None	-	-	-	22.8	25	25	24	140	23.8	25	25	26	142
												11746	16.5	1	19.8	47.6	50	50	47	160	48.6	50	50	48	164
												12846	27.8	1	33.4	64.6	70	70	63	173	65.6	70	70	64	178
												13346	33	1	39.7	72.4	80	80	70	180	73.4	80	80	71	184
												14246	41.7	2	50.2	69.9	70	70	63	173	71.2	80	80	64	178
	575-3-60	6	41	9	4.8	33	8	2.2	2.5	0.4	8.6	None	-	-	-	18.7	20	20	20	105	19.5	20	20	21	107
												11758	17	1	16.4	39.2	40	40	39	121	40	40	40	40	125
												13458	34	1	32.7	59.6	60	60	57	137	60.4	70	70	58	141

1. Minimum Circuit Ampacity.
2. Dual Element, Time Delay Type.
3. HACR type per NEC.
4. Non-fused Disconnect, Verify on the unit nameplate that the disconnect is properly sized for the application. Units with field installed electric heat kits may exceed the factory installed disconnect amperage rating.

XYE04-09 High Indoor Blower - Without Powered Convenience Outlet

Size (Tons)	Nominal Unit Voltage	Compressor 1			Compressor 2			OD Fan Motors (each)	Supply Blower Motor	Pwr Exh Motor	Pwr Conv Outlet	Electric Heat Field Installed Kit 2EK045*				MCA[1] (Amps)	Min Fuse[2]/ Breaker[3] Size (Amps)	Max Fuse[2]/ Breaker[3] Size (Amps)	Min Discon-nect Rating[4]		MCA[1] w/Pwr Exh (Amps)	Min Fuse[2]/ Breaker[3] Size w/ Pwr Exh (Amps)	Max Fuse[2]/ Breaker[3] Size w/ Pwr Exh (Amps)	Min Discon-nect Rating[4]/ Pwr Exh	
		RLA	LRA	MCC	RLA	LRA	MCC					Model	kW	Stages	Amps				FLA	LRA				FLA	LRA
04 (3)	208-3-60	10.4	73	16				2.3	5.2	1.1		None	-	-	-	20.5	25	30	21	100	21.6	25	30	22	103
												10625	4.9	1	13.6	37.5	40	40	36	114	38.6	40	45	37	116
												11125	7.9	1	21.9	47.9	50	50	46	122	49	50	50	47	125
												11625	12	1	33.3	62.1	70	70	59	134	63.2	70	70	60	136
	230-3-60	10.4	73	16				2.3	5.2	1		None	-	-	-	20.5	25	30	21	103	21.5	25	30	22	105
												10625	6.5	1	15.6	40	40	45	39	119	41	45	45	40	121
												11125	10.5	1	25.3	52.1	60	60	50	128	53.1	60	60	51	131
												11625	16	1	38.5	68.6	70	70	65	142	69.6	70	70	66	144
	460-3-60	5.8	38	9				1.3	2.6	0.5		None	-	-	-	11.2	15	15	11	53	11.7	15	15	12	55
												10646	6	1	7.2	20.2	25	25	19	61	20.7	25	25	20	62
												11146	11.5	1	13.8	28.5	30	30	27	67	29	30	30	28	68
												11446	14	1	16.8	32.2	35	35	30	70	32.7	35	35	31	71
	575-3-60	3.8	36.5	6				1.1	2	0.4		None	-	-	-	7.9	15	15	8	49	8.3	15	15	8	50
												11058	9.2	1	8.9	19	20	20	18	58	19.4	20	20	19	59
												11458	13.8	1	13.3	24.5	25	25	23	62	24.9	25	25	24	63
05 (4)	208-3-60	13.7	83.1	21				2.3	5.2	1.1		None	-	-	-	24.6	25	35	24	110	25.7	30	35	26	113
												10625	4.9	1	13.6	41.6	45	50	40	124	42.7	45	50	41	126
												11125	7.9	1	21.9	52	60	60	50	132	53.1	60	60	51	135
												11625	12	1	33.3	66.2	70	70	63	144	67.3	70	70	64	146
	230-3-60	13.7	83.1	21				2.3	5.2	1		None	-	-	-	24.6	25	35	24	113	25.6	30	35	26	115
												10625	6.5	1	15.6	44.1	45	50	42	129	45.1	50	50	43	131
												11125	10.5	1	25.3	56.2	60	60	53	138	57.2	60	60	55	141
												11625	16	1	38.5	72.7	80	80	69	152	73.7	80	80	70	154
	460-3-60	6.2	41	10				1.3	2.6	0.5		None	-	-	-	11.7	15	15	12	56	12.2	15	15	12	58
												10646	6	1	7.2	20.7	25	25	20	64	21.2	25	25	20	65
												11146	11.5	1	13.8	29	30	30	27	70	29.5	30	30	28	71
												11446	14	1	16.8	32.7	35	35	31	73	33.2	35	35	32	74
	575-3-60	4.8	33	8				1.1	2	0.4		None	-	-	-	9.1	15	15	9	45	9.5	15	15	10	46
												11058	9.2	1	8.9	20.2	25	25	19	54	20.6	25	25	20	55
												11458	13.8	1	13.3	25.7	30	30	24	59	26.1	30	30	25	60
06 (5)	208-3-60	16	110	25				2.3	8.9	1.1		None	-	-	-	31.2	35	45	31	192	32.3	35	45	33	194
												10625	4.9	1	13.6	48.2	50	60	47	205	49.3	50	60	48	208
												11125	7.9	1	21.9	58.6	60	60	56	214	59.7	60	70	58	216
												11625	12	1	33.3	72.8	80	80	70	225	73.9	80	80	71	227
	230-3-60	16	110	25				2.3	8.2	1		None	-	-	-	30.5	35	45	30	194	31.5	35	45	32	196
												10625	6.5	1	15.6	50	50	60	48	210	51	60	60	50	212
												11125	10.5	1	25.3	62.1	70	70	60	219	63.1	70	70	61	222
												11625	16	1	38.5	78.6	80	80	75	233	79.6	80	80	76	235
	460-3-60	7.8	52	12				1.3	4.1	0.5		None	-	-	-	15.2	20	20	15	89	15.7	20	20	16	91
												10646	6	1	7.2	24.2	25	30	23	97	24.7	25	30	24	98
												11146	11.5	1	13.8	32.5	35	35	31	103	33	35	35	32	104
												11446	14	1	16.8	36.2	40	40	35	106	36.7	40	40	35	107
	575-3-60	5.7	38.9	9				1.1	3.2	0.4		None	-	-	-	11.4	15	15	12	67	11.8	15	15	12	68
												11458	13.8	1	13.3	28	30	30	27	81	28.4	30	30	27	82
												12358	23	1	22.1	39	40	40	37	89	39.4	40	40	37	90

XYE04-09 High Indoor Blower - Without Powered Convenience Outlet (Continued)

Size (Tons)	Nominal Unit Voltage	Compressor 1			Compressor 2			OD Fan Motors (each)	Supply Blower Motor	Pwr Exh Motor	Pwr Conv Outlet	Electric Heat Field Installed Kit 2EK045*				MCA[1] (Amps)	Min Fuse[2]/ Breaker[3] Size (Amps)	Max Fuse[2]/ Breaker[3] Size (Amps)	Min Discon-nect Rating[4]		MCA[1] w/Pwr Exh (Amps)	Min Fuse[2]/ Breaker[3] Size w/ Pwr Exh (Amps)	Max Fuse[2]/ Breaker[3] Size w/ Pwr Exh (Amps)	Min Discon-nect Rating[4]/ Pwr Exh	
		RLA	LRA	MCC	RLA	LRA	MCC					Model	kW	Stages	Amps				FLA	LRA				FLA	LRA
07 (6)	208-3-60	19.6	136	31				2.3	10.2	1.1		None	-	-	-	39.3	40	50	40	219	41.5	45	60	42	229
												10725	4.9	1	13.6	56.3	60	70	55	232	58.5	60	70	58	242
												11725	12	1	33.3	80.9	90	90	78	252	83.1	90	90	80	262
												12525	18.6	1	51.6	103.8	110	110	99	270	106	110	110	101	280
	230-3-60	19.6	136	31				2.3	10.2	1		None	-	-	-	39.3	40	50	40	225	41.3	45	60	42	220
												10725	6.5	1	15.6	58.8	60	70	58	241	60.8	70	70	60	250
												11725	16	1	38.5	87.4	90	90	84	264	89.4	90	90	86	273
												12525	24.8	1	59.7	113.9	125	125	108	285	115.9	125	125	111	294
	460-3-60	8.2	66.1	13				1.3	4.8	0.5		None	-	-	-	17.7	20	25	18	112	18.7	20	25	19	109
												10746	6	1	7.2	26.7	30	30	26	119	27.7	30	30	27	124
												11746	16.5	1	19.8	42.5	45	45	41	132	43.5	45	45	42	136
												12646	25.5	1	30.7	56.1	60	60	53	143	57.1	60	60	54	147
	575-3-60	6.6	55.3	10				1.1	3.4	0.4		None	-	-	-	13.9	15	20	14	92	14.7	15	20	15	89
												11758	17	1	16.4	34.4	35	35	33	109	35.2	40	40	34	112
												12658	25.7	1	24.7	44.8	45	45	42	117	45.6	50	50	43	121
A7 (6)	208-3-60	17.6	136	27				4.4	10.2	1.1		None	-	-	-	36.6	40	50	37	199	38.8	40	50	40	204
												10725	4.9	1	13.6	53.6	60	60	53	213	55.8	60	60	55	218
												11725	12	1	33.3	78.2	80	80	75	233	80.4	90	90	78	238
												12525	18.6	1	51.6	101.1	110	110	96	251	103.3	110	110	99	256
	230-3-60	17.6	136	27				4.4	10.2	1		None	-	-	-	36.6	40	50	37	205	38.6	40	50	39	210
												10725	6.5	1	15.6	56.1	60	60	55	221	58.1	60	70	57	225
												11725	16	1	38.5	84.7	90	90	81	244	86.7	90	90	84	248
												12525	24.8	1	59.7	111.2	125	125	106	265	113.2	125	125	108	269
	460-3-60	8.5	66.1	13				2.5	4.8	0.5		None	-	-	-	20.4	25	25	21	101	21.4	25	25	22	103
												10746	6	1	7.2	29.4	30	35	29	108	30.4	35	35	30	110
												11746	16.5	1	19.8	45.2	50	50	44	120	46.2	50	50	45	123
												12646	25.5	1	30.7	58.8	60	60	56	131	59.8	60	60	58	134
	575-3-60	6.3	55.3	10				4.4	3.4	0.4		None	-	-	-	20.1	25	25	21	83	20.9	25	25	22	85
												11758	17	1	16.4	40.6	45	45	40	99	41.4	45	45	41	101
												12658	25.7	1	24.7	51	60	60	50	108	51.8	60	60	51	109
08 (7.5)	208-3-60	13.8	83.1	22	13.6	83.1	21	5.8	10.2	1.1		None	-	-	-	46.9	50	60	50	251	49.1	50	60	52	261
												11725	12	1	33.3	88.5	90	90	88	285	90.7	100	100	91	295
												12525	18.6	1	51.6	111.4	125	125	109	303	113.6	125	125	112	313
												13225	24	1	66.6	130.2	150	150	127	318	132.4	150	150	129	328
												14225	31.8	2	88.3	123.1	125	125	118	311	125.9	150	150	120	321
	230-3-60	13.8	83.1	22	13.6	83.1	21	5.2	10.2	1		None	-	-	-	46.3	50	60	49	254	48.3	50	60	52	259
												11725	16	1	38.5	94.4	100	100	93	293	96.4	100	100	96	302
												12525	24.8	1	59.7	120.9	125	125	118	314	122.9	125	125	120	323
												13225	32	1	77	142.6	150	150	138	331	144.6	150	150	140	340
												14225	42.4	2	102	140.3	150	150	128	322	142.8	150	150	130	332
	460-3-60	6.2	41	10	6.1	41	10	2.9	4.8	0.5		None	-	-	-	21.6	25	25	23	128	22.6	25	25	24	130
												11746	16.5	1	19.8	46.4	50	50	46	147	47.4	50	50	47	152
												12846	27.8	1	33.4	63.4	70	70	61	161	64.4	70	70	63	165
												13346	33	1	39.7	71.2	80	80	69	167	72.2	80	80	70	172
												14246	41.7	2	50.2	68.8	70	70	61	161	70	70	70	63	165
	575-3-60	4.9	33	8	4.2	33	7	2.2	3.4	0.4		None	-	-	-	15.9	20	20	17	105	16.7	20	20	18	107
												11758	17	1	16.4	36.4	40	40	36	121	37.2	40	40	37	125
												13458	34	1	32.7	56.8	60	60	55	138	57.6	60	60	55	141

XYE04-09 High Indoor Blower - Without Powered Convenience Outlet (Continued)

Size (Tons)	Nominal Unit Voltage	Compressor 1			Compressor 2			OD Fan Motors (each)	Supply Blower Motor	Pwr Exh Motor	Pwr Conv Outlet	Electric Heat Field Installed Kit 2EK045*				MCA[1] (Amps)	Min Fuse[2]/ Breaker[3] Size (Amps)	Max Fuse[2]/ Breaker[3] Size (Amps)	Min Discon-nect Rating[4]		MCA[1] w/Pwr Exh (Amps)	Min Fuse[2]/ Breaker[3] Size w/ Pwr Exh (Amps)	Max Fuse[2]/ Breaker[3] Size w/ Pwr Exh (Amps)	Min Discon-nect Rating[4]/ Pwr Exh	
		RLA	LRA	MCC	RLA	LRA	MCC					Model	kW	Stages	Amps				FLA	LRA				FLA	LRA
09 (8.5)	208-3-60	14.5	98	23	13.7	83.1	21	5.8	10.2	1.1		None	-	-	-	47.8	50	60	51	266	50	50	60	53	276
												11725	12	1	33.3	89.4	90	90	89	300	91.6	100	100	92	310
												12525	18.6	1	51.6	112.3	125	125	110	318	114.5	125	125	113	328
												13225	24	1	66.6	131.1	150	150	127	333	133.3	150	150	130	343
												14225	31.8	2	88.3	123.1	125	125	119	325	125.9	150	150	121	335
	230-3-60	14.5	98	23	13.7	83.1	21	5.2	10.2	1		None	-	-	-	47.2	50	60	50	269	49.2	50	60	52	274
												11725	16	1	38.5	95.3	100	100	94	308	97.3	100	100	97	317
												12525	24.8	1	59.7	121.8	125	125	119	329	123.8	125	125	121	338
												13225	32	1	77	143.5	150	150	139	346	145.5	150	150	141	355
												14225	42.4	2	102	140.3	150	150	128	337	142.8	150	150	131	346
	460-3-60	6.3	55	10	6.2	41	10	2.9	4.8	0.5		None	-	-	-	21.8	25	25	23	142	22.8	25	25	24	144
												11746	16.5	1	19.8	46.6	50	50	46	161	47.6	50	50	47	166
												12846	27.8	1	33.4	63.6	70	70	62	175	64.6	70	70	63	179
												13346	33	1	39.7	71.4	80	80	69	181	72.4	80	80	70	186
												14246	41.7	2	50.2	68.8	70	70	62	175	70	70	70	63	179
	575-3-60	6	41	9	4.8	33	8	2.2	3.4	0.4		None	-	-	-	17.9	20	20	19	113	18.7	20	20	20	115
												11758	17	1	16.4	38.4	40	40	38	129	39.2	40	40	39	133
												13458	34	1	32.7	58.8	60	60	56	146	59.6	60	60	57	149
With VFD																									
A7 (6)	208-3-60	17.6	136	27				4.4	9.9	1.1		None	-	-	-	36.3	40	50	37	209	38.5	40	50	39	214
												10725	4.9	1	13.6	53.3	60	60	52	222	55.5	60	60	55	227
												11725	12	1	33.3	77.9	80	80	75	242	80.1	90	90	78	247
												12525	18.6	1	51.6	100.8	110	110	96	260	103	110	110	99	265
	230-3-60	17.6	136	27				4.4	9.4	1		None	-	-	-	35.8	40	50	36	217	37.8	40	50	38	221
												10725	6.5	1	15.6	55.3	60	60	54	232	57.3	60	70	56	237
												11725	16	1	38.5	83.9	90	90	80	255	85.9	90	90	83	260
												12525	24.8	1	59.7	110.4	125	125	105	276	112.4	125	125	107	281
	460-3-60	8.5	66.1	13				2.5	4.7	0.5		None	-	-	-	20.3	25	25	21	106	21.3	25	25	22	109
												10746	6	1	7.2	29.3	30	35	29	114	30.3	35	35	30	116
												11746	16.5	1	19.8	45.1	50	50	44	126	46.1	50	50	45	128
												12646	25.5	1	30.7	58.7	60	60	56	137	59.7	60	60	57	139
	575-3-60	6.3	55.3	10				4.4	4.3	0.4		None	-	-	-	21	25	25	22	95	21.8	25	25	23	97
												11758	17	1	16.4	41.5	45	45	41	112	42.3	45	45	42	114
												12658	25.7	1	24.7	51.9	60	60	51	120	52.7	60	60	52	122
08 (7.5)	208-3-60	13.8	83.1	22	13.6	83.1	21	5.8	9.9	1.1		None	-	-	-	46.6	50	60	50	261	48.8	50	60	52	271
												11725	12	1	33.3	88.2	90	90	88	294	90.4	100	100	90	304
												12525	18.6	1	51.6	111.1	125	125	109	312	113.3	125	125	111	322
												13225	24	1	66.6	129.9	150	150	126	327	132.1	150	150	129	337
												14225	31.8	2	88.3	122.8	125	125	118	320	125.5	150	150	120	330
	230-3-60	13.8	83.1	22	13.6	83.1	21	5.2	9.4	1		None	-	-	-	45.5	50	50	48	266	47.5	50	60	51	270
												11725	16	1	38.5	93.6	100	100	93	304	95.6	100	100	95	314
												12525	24.8	1	59.7	120.1	125	125	117	326	122.1	125	125	119	335
												13225	32	1	77	141.8	150	150	137	343	143.8	150	150	139	352
												14225	42.4	2	102	139.3	150	150	127	334	141.8	150	150	129	343
	460-3-60	6.2	41	10	6.1	41	10	2.9	4.7	0.5		None	-	-	-	21.5	25	25	23	133	22.5	25	25	24	136
												11746	16.5	1	19.8	46.3	50	50	46	153	47.3	50	50	47	158
												12846	27.8	1	33.4	63.3	70	70	61	167	64.3	70	70	62	171
												13346	33	1	39.7	71.1	80	80	69	173	72.1	80	80	70	177
												14246	41.7	2	50.2	68.6	70	70	61	167	69.9	70	70	62	171
	575-3-60	4.9	33	8	4.2	33	7	2.2	4.3	0.4		None	-	-	-	16.8	20	20	18	117	17.6	20	20	19	119
												11758	17	1	16.4	37.3	40	40	37	134	38.1	40	40	38	137
												13458	34	1	32.7	57.7	60	60	56	150	58.5	60	60	56	154

XYE04-09 High Indoor Blower - Without Powered Convenience Outlet (Continued)

Size (Tons)	Nominal Unit Voltage	Compressor 1			Compressor 2			OD Fan Motors (each)	Supply Blower Motor	Pwr Exh Motor	Pwr Conv Outlet	Electric Heat Field Installed Kit 2EK045*				MCA[1] (Amps)	Min Fuse[2]/ Breaker[3] Size (Amps)	Max Fuse[2]/ Breaker[3] Size (Amps)	Min Discon-nect Rating[4]		MCA[1] w/Pwr Exh (Amps)	Min Fuse[2]/ Breaker[3] Size w/ Pwr Exh (Amps)	Max Fuse[2]/ Breaker[3] Size w/ Pwr Exh (Amps)	Min Discon-nect Rating[4]/ Pwr Exh	
		RLA	LRA	MCC	RLA	LRA	MCC					Model	kW	Stages	Amps				FLA	LRA				FLA	LRA
09 (8.5)	208-3-60	14.5	98	23	13.7	83.1	21	5.8	9.9	1.1		None	-	-	-	47.5	50	60	50	276	49.7	50	60	53	286
												11725	12	1	33.3	89.1	90	90	89	309	91.3	100	100	91	319
												12525	18.6	1	51.6	112	125	125	110	327	114.2	125	125	112	337
												13225	24	1	66.6	130.8	150	150	127	342	133	150	150	130	352
												14225	31.8	2	88.3	122.8	125	125	118	335	125.5	150	150	121	345
	230-3-60	14.5	98	23	13.7	83.1	21	5.2	9.4	1		None	-	-	-	46.4	50	60	49	281	48.4	50	60	52	285
												11725	16	1	38.5	94.5	100	100	93	319	96.5	100	100	96	328
												12525	24.8	1	59.7	121	125	125	118	340	123	125	125	120	350
												13225	32	1	77	142.7	150	150	138	358	144.7	150	150	140	367
												14225	42.4	2	102	139.3	150	150	128	349	141.8	150	150	130	358
	460-3-60	6.3	55	10	6.2	41	10	2.9	4.7	0.5		None	-	-	-	21.7	25	25	23	147	22.7	25	25	24	150
												11746	16.5	1	19.8	46.5	50	50	46	167	47.5	50	50	47	172
												12846	27.8	1	33.4	63.5	70	70	62	181	64.5	70	70	63	185
												13346	33	1	39.7	71.3	80	80	69	187	72.3	80	80	70	191
												14246	41.7	2	50.2	68.6	70	70	62	181	69.9	70	70	63	185
	575-3-60	6	41	9	4.8	33	8	2.2	4.3	0.4		None	-	-	-	18.8	20	20	20	125	19.6	20	20	21	127
												11758	17	1	16.4	39.3	40	40	39	142	40.1	45	45	40	145
												13458	34	1	32.7	59.7	60	60	58	158	60.5	70	70	58	162

1. Minimum Circuit Ampacity.
2. Dual Element, Time Delay Type.
3. HACR type per NEC.
4. Non-fused Disconnect, Verify on the unit nameplate that the disconnect is properly sized for the application. Units with field installed electric heat kits may exceed the factory installed disconnect amperage rating.

XYE04-09 High Indoor Blower - With Powered Convenience Outlet

Size (Tons)	Nominal Unit Voltage	Compressor 1			Compressor 2			OD Fan Motors (each)	Supply Blower Motor	Pwr Exh Motor	Pwr Conv Outlet	Electric Heat Field Installed Kit 2EK045*				MCA[1] (Amps)	Min Fuse[2]/ Breaker[3] Size (Amps)	Max Fuse[2]/ Breaker[3] Size (Amps)	Min Discon-nect Rating[4]		MCA[1] w/Pwr Exh (Amps)	Min Fuse[2]/ Breaker[3] Size w/ Pwr Exh (Amps)	Max Fuse[2]/ Breaker[3] Size w/ Pwr Exh (Amps)	Min Discon-nect Rating[4]/ Pwr Exh	
		RLA	LRA	MCC	RLA	LRA	MCC					Model	kW	Stages	Amps				FLA	LRA				FLA	LRA
04 (3)	208-3-60	10.4	73	16				2.3	5.2	1.1	8.6	None	-	-	-	24.8	25	35	26	105	25.9	30	35	27	107
												10625	4.9	1	13.6	41.8	45	45	41	118	42.9	45	45	42	121
												11125	7.9	1	21.9	52.2	60	60	51	126	53.3	60	60	52	129
												11625	12	1	33.3	66.4	70	70	64	138	67.5	70	70	65	140
	230-3-60	10.4	73	16				2.3	5.2	1	8.6	None	-	-	-	24.8	25	35	26	107	25.8	30	35	27	110
												10625	6.5	1	15.6	44.3	45	50	43	123	45.3	50	50	45	125
												11125	10.5	1	25.3	56.4	60	60	55	133	57.4	60	60	56	135
												11625	16	1	38.5	72.9	80	80	70	146	73.9	80	80	71	148
	460-3-60	5.8	38	9				1.3	2.6	0.5	8.6	None	-	-	-	13.4	15	15	14	56	13.9	15	15	14	57
												10646	6	1	7.2	22.4	25	25	22	63	22.9	25	25	23	64
												11146	11.5	1	13.8	30.7	35	35	30	69	31.2	35	35	30	70
												11446	14	1	16.8	34.4	35	35	33	72	34.9	35	35	34	73
	575-3-60	3.8	36.5	6				1.1	2	0.4	8.6	None	-	-	-	9.6	15	15	10	51	10	15	15	10	51
												11058	9.2	1	8.9	20.7	25	25	20	59	21.1	25	25	21	60
												11458	13.8	1	13.3	26.2	30	30	25	64	26.6	30	30	26	65
05 (4)	208-3-60	13.7	83.1	21				2.3	5.2	1.1	8.6	None	-	-	-	28.9	30	40	29	115	30	30	40	31	117
												10625	4.9	1	13.6	45.9	50	50	45	128	47	50	50	46	131
												11125	7.9	1	21.9	56.3	60	60	55	137	57.4	60	60	56	139
												11625	12	1	33.3	70.5	80	80	68	148	71.6	80	80	69	150
	230-3-60	13.7	83.1	21				2.3	5.2	1	8.6	None	-	-	-	28.9	30	40	29	117	29.9	30	40	30	120
												10625	6.5	1	15.6	48.4	50	50	47	133	49.4	50	50	48	135
												11125	10.5	1	25.3	60.5	70	70	58	143	61.5	70	70	60	145
												11625	16	1	38.5	77	80	80	74	156	78	80	80	75	158
	460-3-60	6.2	41	10				1.3	2.6	0.5	8.6	None	-	-	-	13.9	15	20	14	59	14.4	15	20	15	60
												10646	6	1	7.2	22.9	25	25	22	66	23.4	25	25	23	67
												11146	11.5	1	13.8	31.2	35	35	30	72	31.7	35	35	31	73
												11446	14	1	16.8	34.9	35	35	33	75	35.4	40	40	34	76
	575-3-60	4.8	33	8				1.1	2	0.4	8.6	None	-	-	-	10.8	15	15	11	47	11.2	15	15	12	48
												11058	9.2	1	8.9	21.9	25	25	21	56	22.3	25	25	22	57
												11458	13.8	1	13.3	27.4	30	30	26	60	27.8	30	30	27	61
06 (5)	208-3-60	16	110	25				2.3	8.9	1.1	8.6	None	-	-	-	35.5	40	50	36	196	36.6	40	50	37	198
												10625	4.9	1	13.6	52.5	60	60	52	210	53.6	60	60	53	212
												11125	7.9	1	21.9	62.9	70	70	61	218	64	70	70	63	220
												11625	12	1	33.3	77.1	80	80	75	229	78.2	80	80	76	232
	230-3-60	16	110	25				2.3	8.2	1	8.6	None	-	-	-	34.8	35	50	35	198	35.8	40	50	37	201
												10625	6.5	1	15.6	54.3	60	60	53	214	55.3	60	60	55	216
												11125	10.5	1	25.3	66.4	70	70	65	224	67.4	70	70	66	226
												11625	16	1	38.5	82.9	90	90	80	237	83.9	90	90	81	239
	460-3-60	7.8	52	12				1.3	4.1	0.5	8.6	None	-	-	-	17.4	20	25	18	92	17.9	20	25	18	93
												10646	6	1	7.2	26.4	30	30	26	99	26.9	30	30	27	100
												11146	11.5	1	13.8	34.7	35	35	34	105	35.2	40	40	34	106
												11446	14	1	16.8	38.4	40	40	37	108	38.9	40	40	38	109
	575-3-60	5.7	38.9	9				1.1	3.2	0.4	8.6	None	-	-	-	13.1	15	15	13	69	13.5	15	15	14	70
												11458	13.8	1	13.3	29.7	30	30	29	82	30.1	35	35	29	83
												12358	23	1	22.1	40.7	45	45	39	91	41.1	45	45	39	92

XYE04-09 High Indoor Blower - With Powered Convenience Outlet (Continued)

Size (Tons)	Nominal Unit Voltage	Compressor 1			Compressor 2			OD Fan Motors (each)	Supply Blower Motor	Pwr Exh Motor	Pwr Conv Outlet	Electric Heat Field Installed Kit 2EK045*				MCA[1] (Amps)	Min Fuse[2]/ Breaker[3] Size (Amps)	Max Fuse[2]/ Breaker[3] Size (Amps)	Min Discon-nect Rating[4]		MCA[1] w/Pwr Exh (Amps)	Min Fuse[2]/ Breaker[3] Size w/ Pwr Exh (Amps)	Max Fuse[2]/ Breaker[3] Size w/ Pwr Exh (Amps)	Min Discon-nect Rating[4]/ Pwr Exh	
		RLA	LRA	MCC	RLA	LRA	MCC					Model	kW	Stages	Amps				FLA	LRA				FLA	LRA
07 (6)	208-3-60	19.6	136	31				2.3	10.2	1.1	8.6	None	-	-	-	43.6	45	60	45	223	45.8	50	60	47	233
												10725	4.9	1	13.6	60.6	70	70	60	236	62.8	70	70	63	246
												11725	12	1	33.3	85.2	90	90	83	256	87.4	90	90	85	266
												12525	18.6	1	51.6	108.1	110	110	104	274	110.3	125	125	106	284
	230-3-60	19.6	136	31				2.3	10.2	1	8.6	None	-	-	-	43.6	45	60	45	229	45.6	50	60	47	224
												10725	6.5	1	15.6	63.1	70	70	62	245	65.1	70	80	65	254
												11725	16	1	38.5	91.7	100	100	89	268	93.7	100	100	91	277
												12525	24.8	1	59.7	118.2	125	125	113	289	120.2	125	125	115	298
	460-3-60	8.2	66.1	13				1.3	4.8	0.5	8.6	None	-	-	-	19.9	20	25	20	114	20.9	25	25	22	111
												10746	6	1	7.2	28.9	30	35	29	122	29.9	30	35	30	126
												11746	16.5	1	19.8	44.7	45	45	43	134	45.7	50	50	44	139
												12646	25.5	1	30.7	58.3	60	60	56	145	59.3	60	60	57	149
	575-3-60	6.6	55.3	10				1.1	3.4	0.4	8.6	None	-	-	-	15.6	20	20	16	94	16.4	20	20	17	91
												11758	17	1	16.4	36.1	40	40	35	110	36.9	40	40	36	114
												12658	25.7	1	24.7	46.5	50	50	44	119	47.3	50	50	45	122
A7 (6)	208-3-60	17.6	136	27				4.4	10.2	1.1	8.6	None	-	-	-	40.9	45	50	42	204	43.1	45	50	45	209
												10725	4.9	1	13.6	57.9	60	70	58	217	60.1	70	70	60	222
												11725	12	1	33.3	82.5	90	90	80	237	84.7	90	90	83	242
												12525	18.6	1	51.6	105.4	110	110	101	255	107.6	110	110	104	260
	230-3-60	17.6	136	27				4.4	10.2	1	8.6	None	-	-	-	40.9	45	50	42	209	42.9	45	60	44	214
												10725	6.5	1	15.6	60.4	70	70	60	225	62.4	70	70	62	230
												11725	16	1	38.5	89	90	90	86	248	91	100	100	89	252
												12525	24.8	1	59.7	115.5	125	125	111	269	117.5	125	125	113	274
	460-3-60	8.5	66.1	13				2.5	4.8	0.5	8.6	None	-	-	-	22.6	25	30	24	103	23.6	25	30	25	105
												10746	6	1	7.2	31.6	35	35	32	110	32.6	35	35	33	112
												11746	16.5	1	19.8	47.4	50	50	46	123	48.4	50	50	47	125
												12646	25.5	1	30.7	61	70	70	59	133	62	70	70	60	136
	575-3-60	6.3	55.3	10				4.4	3.4	0.4	8.6	None	-	-	-	21.8	25	25	23	85	22.6	25	25	24	86
												11758	17	1	16.4	42.3	45	45	42	101	43.1	45	45	43	103
												12658	25.7	1	24.7	52.7	60	60	52	109	53.5	60	60	53	111
08 (7.5)	208-3-60	13.8	83.1	22	13.6	83.1	21	5.8	10.2	1.1	8.6	None	-	-	-	51.2	60	60	55	256	53.4	60	60	57	266
												11725	12	1	33.3	92.8	100	100	93	289	95	100	100	96	299
												12525	18.6	1	51.6	115.7	125	125	114	307	117.9	125	125	117	317
												13225	24	1	66.6	134.5	150	150	131	322	136.7	150	150	134	332
												14225	31.8	2	88.3	128.5	150	150	123	315	131.3	150	150	125	325
	230-3-60	13.8	83.1	22	13.6	83.1	21	5.2	10.2	1	8.6	None	-	-	-	50.6	60	60	54	259	52.6	60	60	56	263
												11725	16	1	38.5	98.7	100	100	98	297	100.7	110	110	101	306
												12525	24.8	1	59.7	125.2	150	150	123	318	127.2	150	150	125	327
												13225	32	1	77	146.9	150	150	143	336	148.9	150	150	145	345
												14225	42.4	2	102	145.6	150	150	132	327	148.1	150	150	135	336
	460-3-60	6.2	41	10	6.1	41	10	2.9	4.8	0.5	8.6	None	-	-	-	23.8	25	25	26	130	24.8	25	25	27	132
												11746	16.5	1	19.8	48.6	50	50	48	149	49.6	50	50	49	154
												12846	27.8	1	33.4	65.6	70	70	64	163	66.6	70	70	65	167
												13346	33	1	39.7	73.4	80	80	71	169	74.4	80	80	72	174
												14246	41.7	2	50.2	71.4	80	80	64	163	72.7	80	80	65	167
	575-3-60	4.9	33	8	4.2	33	7	2.2	3.4	0.4	8.6	None	-	-	-	17.6	20	20	19	107	18.4	20	20	20	108
												11758	17	1	16.4	38.1	40	40	38	123	38.9	40	40	39	127
												13458	34	1	32.7	58.5	60	60	56	139	59.3	60	60	57	143

XYE04-09 High Indoor Blower - With Powered Convenience Outlet (Continued)

Size (Tons)	Nominal Unit Voltage	Compressor 1			Compressor 2			OD Fan Motors (each)	Supply Blower Motor	Pwr Exh Motor	Pwr Conv Outlet	Electric Heat Field Installed Kit 2EK045*				MCA[1] (Amps)	Min Fuse[2]/ Breaker[3] Size (Amps)	Max Fuse[2]/ Breaker[3] Size (Amps)	Min Discon-nect Rating[4]		MCA[1] w/Pwr Exh (Amps)	Min Fuse[2]/ Breaker[3] Size w/ Pwr Exh (Amps)	Max Fuse[2]/ Breaker[3] Size w/ Pwr Exh (Amps)	Min Discon-nect Rating[4]/ Pwr Exh	
		RLA	LRA	MCC	RLA	LRA	MCC					Model	kW	Stages	Amps				FLA	LRA				FLA	LRA
09 (8.5)	208-3-60	14.5	98	23	13.7	83.1	21	5.8	10.2	1.1	8.6	None	-	-	-	52.1	60	60	56	271	54.3	60	60	58	281
												11725	12	1	33.3	93.7	100	100	94	304	95.9	100	100	97	314
												12525	18.6	1	51.6	116.6	125	125	115	322	118.8	125	125	118	332
												13225	24	1	66.6	135.4	150	150	132	337	137.6	150	150	135	347
												14225	31.8	2	88.3	128.5	150	150	124	330	131.3	150	150	126	340
	230-3-60	14.5	98	23	13.7	83.1	21	5.2	10.2	1	8.6	None	-	-	-	51.5	60	60	55	273	53.5	60	60	57	278
												11725	16	1	38.5	99.6	100	100	99	312	101.6	110	110	102	321
												12525	24.8	1	59.7	126.1	150	150	124	333	128.1	150	150	126	342
												13225	32	1	77	147.8	150	150	144	350	149.8	150	150	146	360
												14225	42.4	2	102	145.6	150	150	133	342	148.1	150	150	136	351
	460-3-60	6.3	55	10	6.2	41	10	2.9	4.8	0.5	8.6	None	-	-	-	24	25	30	26	144	25	25	30	27	146
												11746	16.5	1	19.8	48.8	50	50	49	163	49.8	50	50	50	168
												12846	27.8	1	33.4	65.8	70	70	64	177	66.8	70	70	65	181
												13346	33	1	39.7	73.6	80	80	71	183	74.6	80	80	73	188
												14246	41.7	2	50.2	71.4	80	80	64	177	72.7	80	80	65	181
	575-3-60	6	41	9	4.8	33	8	2.2	3.4	0.4	8.6	None	-	-	-	19.6	20	25	21	115	20.4	25	25	22	116
												11758	17	1	16.4	40.1	45	45	40	131	40.9	45	45	41	135
												13458	34	1	32.7	60.5	70	70	58	147	61.3	70	70	59	151
With VFD																									
A7 (6)	208-3-60	17.6	136	27				4.4	9.9	1.1	8.6	None	-	-	-	40.6	45	50	42	213	42.8	45	50	44	218
												10725	4.9	1	13.6	57.6	60	70	57	226	59.8	60	70	60	231
												11725	12	1	33.3	82.2	90	90	80	246	84.4	90	90	82	251
												12525	18.6	1	51.6	105.1	110	110	101	264	107.3	110	110	104	269
	230-3-60	17.6	136	27				4.4	9.4	1	8.6	None	-	-	-	40.1	45	50	41	221	42.1	45	50	43	226
												10725	6.5	1	15.6	59.6	60	70	59	237	61.6	70	70	61	241
												11725	16	1	38.5	88.2	90	90	85	259	90.2	100	100	88	264
												12525	24.8	1	59.7	114.7	125	125	110	281	116.7	125	125	112	285
	460-3-60	8.5	66.1	13				2.5	4.7	0.5	8.6	None	-	-	-	22.5	25	30	23	109	23.5	25	30	25	111
												10746	6	1	7.2	31.5	35	35	32	116	32.5	35	35	33	118
												11746	16.5	1	19.8	47.3	50	50	46	128	48.3	50	50	47	131
												12646	25.5	1	30.7	60.9	70	70	59	139	61.9	70	70	60	141
	575-3-60	6.3	55.3	10				4.4	4.3	0.4	8.6	None	-	-	-	22.7	25	25	24	97	23.5	25	25	25	99
												11758	17	1	16.4	43.2	45	45	43	113	44	45	45	44	115
												12658	25.7	1	24.7	53.6	60	60	53	122	54.4	60	60	54	124
08 (7.5)	208-3-60	13.8	83.1	22	13.6	83.1	21	5.8	9.9	1.1	8.6	None	-	-	-	50.9	60	60	55	265	53.1	60	60	57	275
												11725	12	1	33.3	92.5	100	100	93	298	94.7	100	100	95	308
												12525	18.6	1	51.6	115.4	125	125	114	317	117.6	125	125	116	327
												13225	24	1	66.6	134.2	150	150	131	332	136.4	150	150	134	342
												14225	31.8	2	88.3	128.1	150	150	122	324	130.9	150	150	125	334
	230-3-60	13.8	83.1	22	13.6	83.1	21	5.2	9.4	1	8.6	None	-	-	-	49.8	50	60	53	270	51.8	60	60	56	275
												11725	16	1	38.5	97.9	100	100	98	309	99.9	100	100	100	318
												12525	24.8	1	59.7	124.4	125	125	122	330	126.4	150	150	124	339
												13225	32	1	77	146.1	150	150	142	347	148.1	150	150	144	356
												14225	42.4	2	102	144.6	150	150	132	338	147.1	150	150	134	347
	460-3-60	6.2	41	10	6.1	41	10	2.9	4.7	0.5	8.6	None	-	-	-	23.7	25	25	25	135	24.7	25	25	27	138
												11746	16.5	1	19.8	48.5	50	50	48	155	49.5	50	50	49	160
												12846	27.8	1	33.4	65.5	70	70	64	169	66.5	70	70	65	173
												13346	33	1	39.7	73.3	80	80	71	175	74.3	80	80	72	180
												14246	41.7	2	50.2	71.3	80	80	64	169	72.6	80	80	65	173
	575-3-60	4.9	33	8	4.2	33	7	2.2	4.3	0.4	8.6	None	-	-	-	18.5	20	20	20	119	19.3	20	20	21	121
												11758	17	1	16.4	39	40	40	39	135	39.8	40	40	40	139
												13458	34	1	32.7	59.4	60	60	58	152	60.2	70	70	58	155

XYE04-09 High Indoor Blower - With Powered Convenience Outlet (Continued)

Size (Tons)	Nominal Unit Voltage	Compressor 1			Compressor 2			OD Fan Motors (each)	Supply Blower Motor	Pwr Exh Motor	Pwr Conv Outlet	Electric Heat Field Installed Kit 2EK045*				MCA[1] (Amps)	Min Fuse[2]/ Breaker[3] Size (Amps)	Max Fuse[2]/ Breaker[3] Size (Amps)	Min Discon-nect Rating[4]		MCA[1] w/Pwr Exh (Amps)	Min Fuse[2]/ Breaker[3] Size w/ Pwr Exh (Amps)	Max Fuse[2]/ Breaker[3] Size w/ Pwr Exh (Amps)	Min Discon-nect Rating[4]/ Pwr Exh	
		RLA	LRA	MCC	RLA	LRA	MCC					Model	kW	Stages	Amps				FLA	LRA				FLA	LRA
09 (8.5)	208-3-60	14.5	98	23	13.7	83.1	21	5.8	9.9	1.1	8.6	None	-	-	-	51.8	60	60	55	280	54	60	60	58	290
												11725	12	1	33.3	93.4	100	100	94	313	95.6	100	100	96	323
												12525	18.6	1	51.6	116.3	125	125	115	332	118.5	125	125	117	342
												13225	24	1	66.6	135.1	150	150	132	347	137.3	150	150	135	357
												14225	31.8	2	88.3	128.1	150	150	123	339	130.9	150	150	126	349
	230-3-60	14.5	98	23	13.7	83.1	21	5.2	9.4	1	8.6	None	-	-	-	50.7	60	60	54	285	52.7	60	60	56	290
												11725	16	1	38.5	98.8	100	100	98	324	100.8	110	110	101	333
												12525	24.8	1	59.7	125.3	150	150	123	345	127.3	150	150	125	354
												13225	32	1	77	147	150	150	143	362	149	150	150	145	371
												14225	42.4	2	102	144.6	150	150	132	353	147.1	150	150	135	362
	460-3-60	6.3	55	10	6.2	41	10	2.9	4.7	0.5	8.6	None	-	-	-	23.9	25	30	26	149	24.9	25	30	27	152
												11746	16.5	1	19.8	48.7	50	50	48	169	49.7	50	50	50	174
												12846	27.8	1	33.4	65.7	70	70	64	183	66.7	70	70	65	187
												13346	33	1	39.7	73.5	80	80	71	189	74.5	80	80	72	194
												14246	41.7	2	50.2	71.3	80	80	64	183	72.6	80	80	65	187
	575-3-60	6	41	9	4.8	33	8	2.2	4.3	0.4	8.6	None	-	-	-	20.5	25	25	22	127	21.3	25	25	23	129
												11758	17	1	16.4	41	45	45	41	143	41.8	45	45	42	147
												13458	34	1	32.7	61.4	70	70	59	160	62.2	70	70	60	163

1. Minimum Circuit Ampacity.
2. Dual Element, Time Delay Type.
3. HACR type per NEC.
4. Non-fused Disconnect, Verify on the unit nameplate that the disconnect is properly sized for the application. Units with field installed electric heat kits may exceed the factory installed disconnect amperage rating.

XXEA7-12 Standard Indoor Blower - Without Powered Convenience Outlet

Size (Tons)	Nominal Unit Voltage	Compressor 1			Compressor 2			OD Fan Motors (each)	Supply Blower Motor	Pwr Exh Motor	Pwr Conv Outlet	Electric Heat Field Installed Kit 2EK045*				MCA[1] (Amps)	Min Fuse[2]/ Breaker[3] Size (Amps)	Max Fuse[2]/ Breaker[3] Size (Amps)	Min Discon-nect Rating[4]		MCA[1] w/Pwr Exh (Amps)	Min Fuse[2]/ Breaker[3] Size w/ Pwr Exh (Amps)	Max Fuse[2]/ Breaker[3] Size w/ Pwr Exh (Amps)	Min Discon-nect Rating[4]/ Pwr Exh	
		RLA	LRA	MCC	RLA	LRA	MCC					Model	kW	Stages	Amps				FLA	LRA				FLA	LRA
A7 (6)	208-3-60	17.6	136	27				2.3	5.2	1.1		None	-	-	-	29.5	30	45	29	163	30.6	35	45	30	166
												10625	4.9	1	13.6	46.5	50	60	45	177	47.6	50	60	46	179
												11125	7.9	1	21.9	56.9	60	60	54	185	58	60	70	55	188
												11625	12	1	33.3	71.1	80	80	67	197	72.2	80	80	68	199
	230-3-60	17.6	136	27				2.3	5.2	1		None	-	-	-	29.5	30	45	29	166	30.5	35	45	30	168
												10625	6.5	1	15.6	49	50	60	47	182	50	50	60	48	184
												11125	10.5	1	25.3	61.1	70	70	58	191	62.1	70	70	59	194
												11625	16	1	38.5	77.6	80	80	73	205	78.6	80	80	74	207
	460-3-60	8.5	66.1	13				1.3	2.6	0.5		None	-	-	-	14.5	15	20	14	82	15	15	20	15	83
												10646	6	1	7.2	23.5	25	30	23	89	24	25	30	23	90
												11146	11.5	1	13.8	31.8	35	35	30	95	32.3	35	35	31	96
												11446	14	1	16.8	35.5	40	40	34	98	36	40	40	34	99
	575-3-60	6.3	55.3	10				1.1	2	0.4		None	-	-	-	11	15	15	11	68	11.4	15	15	11	69
08 (7.5)	208-3-60	13.8	83.1	22	13.8	83.1	22	2.3	5.2	1.1		None	-	-	-	40.9	45	50	43	198	43.1	45	50	46	203
												11725	12	1	33.3	82.5	90	90	81	232	84.7	90	90	84	237
												12525	18.6	1	51.6	105.4	110	110	102	250	107.6	110	110	105	255
												13225	24	1	66.6	124.2	125	125	120	265	126.4	150	150	122	270
												14225	31.8	2	88.3	116.9	125	125	111	257	119.6	125	125	114	262
	230-3-60	13.8	83.1	22	13.8	83.1	22	2.3	5.2	1		None	-	-	-	40.9	45	50	43	201	42.9	45	50	45	206
												11725	16	1	38.5	89	90	90	87	240	91	100	100	90	244
												12525	24.8	1	59.7	115.5	125	125	112	261	117.5	125	125	114	266
												13225	32	1	77	137.2	150	150	132	278	139.2	150	150	134	283
												14225	42.4	2	102	134	150	150	121	269	136.5	150	150	124	274
	460-3-60	6.2	41	10	6.2	41	10	1.3	2.6	0.5		None	-	-	-	19.2	20	25	20	100	20.2	25	25	21	103
												11746	16.5	1	19.8	44	45	45	43	120	45	45	45	44	122
												12846	27.8	1	33.4	61	70	70	59	134	62	70	70	60	136
												13346	33	1	39.7	68.8	70	70	66	140	69.8	70	70	67	142
												14246	41.7	2	50.2	66	70	70	59	134	67.3	70	70	60	136
	575-3-60	4.9	33	8	4.9	33	8	1.1	2	0.4		None	-	-	-	15.2	20	20	16	81	16	20	20	17	83
												11758	17	1	16.4	35.7	40	40	35	97	36.5	40	40	36	99
												13458	34	1	32.7	56.1	60	60	54	113	56.9	60	60	55	115
09 (8.5)	208-3-60	14.5	98	23	14.5	98	23	2.3	5.2	1.1		None	-	-	-	42.4	45	50	45	228	44.6	45	50	47	233
												11725	12	1	33.3	84	90	90	83	261	86.2	90	90	85	266
												12525	18.6	1	51.6	106.9	110	110	104	280	109.1	110	110	106	285
												13225	24	1	66.6	125.7	150	150	121	295	127.9	150	150	124	300
												14225	31.8	2	88.3	116.9	125	125	113	287	119.6	125	125	115	292
	230-3-60	14.5	98	23	14.5	98	23	2.3	5.2	1		None	-	-	-	42.4	45	50	45	231	44.4	45	50	47	236
												11725	16	1	38.5	90.5	100	100	89	270	92.5	100	100	91	274
												12525	24.8	1	59.7	117	125	125	113	291	119	125	125	116	295
												13225	32	1	77	138.7	150	150	133	308	140.7	150	150	135	313
												14225	42.4	2	102	134	150	150	123	299	136.5	150	150	125	304
	460-3-60	6.3	55	10	6.3	55	10	1.3	2.6	0.5		None	-	-	-	19.4	20	25	20	128	20.4	25	25	22	131
												11746	16.5	1	19.8	44.2	45	45	43	148	45.2	50	50	44	150
												12846	27.8	1	33.4	61.2	70	70	59	162	62.2	70	70	60	164
												13346	33	1	39.7	69	70	70	66	168	70	70	70	67	170
												14246	41.7	2	50.2	66	70	70	59	162	67.3	70	70	60	164
	575-3-60	6	41	9	6	41	9	1.1	2	0.4		None	-	-	-	17.7	20	20	19	97	18.5	20	20	20	99
												11758	17	1	16.4	38.2	40	40	37	113	39	40	40	38	115
												13458	34	1	32.7	58.6	60	60	56	129	59.4	60	60	57	131

XXEA7-12 Standard Indoor Blower - Without Powered Convenience Outlet (Continued)

Size (Tons)	Nominal Unit Voltage	Compressor 1			Compressor 2			OD Fan Motors (each)	Supply Blower Motor	Pwr Exh Motor	Pwr Conv Outlet	Electric Heat Field Installed Kit 2EK045*				MCA[1] (Amps)	Min Fuse[2]/ Breaker[3] Size (Amps)	Max Fuse[2]/ Breaker[3] Size (Amps)	Min Discon-nect Rating[4]		MCA[1] w/Pwr Exh (Amps)	Min Fuse[2]/ Breaker[3] Size w/ Pwr Exh (Amps)	Max Fuse[2]/ Breaker[3] Size w/ Pwr Exh (Amps)	Min Discon-nect Rating[4]/ Pwr Exh	
		RLA	LRA	MCC	RLA	LRA	MCC					Model	kW	Stages	Amps				FLA	LRA				FLA	LRA
12 (10)	208-3-60	15.6	110	24	16	110	25	5.8	5.2	1.1		None	-	-	-	46.6	50	60	49	264	48.8	50	60	52	269
												11725	12	1	33.3	88.2	90	90	87	298	90.4	100	100	90	303
												12525	18.6	1	51.6	111.1	125	125	108	316	113.3	125	125	111	321
												13225	24	1	66.6	129.9	150	150	126	331	132.1	150	150	128	336
												14225	31.8	2	88.3	120.5	125	125	117	324	122.7	125	125	119	329
	230-3-60	15.6	110	24	16	110	25	5.2	5.2	1		None	-	-	-	46	50	60	48	264	48	50	60	51	269
												11725	16	1	38.5	94.1	100	100	93	303	96.1	100	100	95	307
												12525	24.8	1	59.7	120.6	125	125	117	324	122.6	125	125	119	328
												13225	32	1	77	142.3	150	150	137	341	144.3	150	150	139	346
												14225	42.4	2	102	134	150	150	127	332	136.5	150	150	129	337
	460-3-60	7.8	52	12	7.8	52	12	2.9	2.6	0.5		None	-	-	-	23.1	25	30	24	128	24.1	25	30	25	130
												11746	16.5	1	19.8	47.9	50	50	47	147	48.9	50	50	48	150
												12846	27.8	1	33.4	64.9	70	70	63	161	65.9	70	70	64	163
												13346	33	1	39.7	72.7	80	80	70	167	73.7	80	80	71	169
												14246	41.7	2	50.2	66	70	70	63	161	67.3	70	70	64	163
	575-3-60	5.8	38.9	9	5.7	38.9	9	2.2	2	0.4		None	-	-	-	17.2	20	20	18	99	18	20	20	19	101
												11758	17	1	16.4	37.7	40	40	37	116	38.5	40	40	38	117
												13458	34	1	32.7	58.1	60	60	56	132	58.9	60	60	57	134
												With VFD													
A7 (6)	208-3-60	17.6	136	27				2.3	7	1.1		None	-	-	-	31.3	35	45	31	201	32.4	35	50	32	203
												10625	4.9	1	13.6	48.3	50	60	47	215	49.4	50	60	48	217
												11125	7.9	1	21.9	58.7	60	70	56	223	59.8	60	70	57	225
												11625	12	1	33.3	72.9	80	80	69	234	74	80	80	70	237
	230-3-60	17.6	136	27				2.3	7.2	1		None	-	-	-	31.5	35	45	31	203	32.5	35	50	32	205
												10625	6.5	1	15.6	51	60	60	49	218	52	60	60	50	221
												11125	10.5	1	25.3	63.1	70	70	60	228	64.1	70	70	61	230
												11625	16	1	38.5	79.6	80	80	75	241	80.6	90	90	77	244
	460-3-60	8.5	66.1	13				1.3	3.6	0.5		None	-	-	-	15.5	20	20	15	100	16	20	20	16	101
												10646	6	1	7.2	24.5	25	30	24	107	25	25	30	24	108
												11146	11.5	1	13.8	32.8	35	35	31	114	33.3	35	35	32	115
												11446	14	1	16.8	36.5	40	40	35	117	37	40	40	35	118
	575-3-60	6.3	55.3	10				1.1	2.5	0.4		None	-	-	-	11.5	15	15	11	75	11.9	15	15	12	76
08 (7.5)	208-3-60	13.8	83.1	22	13.8	83.1	22	2.3	7	1.1		None	-	-	-	42.7	45	50	45	236	44.9	45	50	48	241
												11725	12	1	33.3	84.3	90	90	83	269	86.5	90	90	86	274
												12525	18.6	1	51.6	107.2	110	110	104	288	109.4	110	110	107	293
												13225	24	1	66.6	126	150	150	122	303	128.2	150	150	124	308
												14225	31.8	2	88.3	119.1	125	125	113	295	121.9	125	125	116	300
	230-3-60	13.8	83.1	22	13.8	83.1	22	2.3	7.2	1		None	-	-	-	42.9	45	50	45	238	44.9	45	50	48	243
												11725	16	1	38.5	91	100	100	90	277	93	100	100	92	281
												12525	24.8	1	59.7	117.5	125	125	114	298	119.5	125	125	116	302
												13225	32	1	77	139.2	150	150	134	315	141.2	150	150	136	320
												14225	42.4	2	102	136.5	150	150	124	306	139	150	150	126	311
	460-3-60	6.2	41	10	6.2	41	10	1.3	3.6	0.5		None	-	-	-	20.2	25	25	21	119	21.2	25	25	23	121
												11746	16.5	1	19.8	45	45	45	44	139	46	50	50	45	141
												12846	27.8	1	33.4	62	70	70	60	152	63	70	70	61	154
												13346	33	1	39.7	69.8	70	70	67	158	70.8	80	80	68	161
												14246	41.7	2	50.2	67.3	70	70	60	152	68.5	70	70	61	154
	575-3-60	4.9	33	8	4.9	33	8	1.1	2.5	0.4		None	-	-	-	15.7	20	20	17	88	16.5	20	20	18	90
												11758	17	1	16.4	36.2	40	40	36	105	37	40	40	36	107
												13458	34	1	32.7	56.6	60	60	54	121	57.4	60	60	55	123

XXEA7-12 Standard Indoor Blower - Without Powered Convenience Outlet (Continued)

Size (Tons)	Nominal Unit Voltage	Compressor 1			Compressor 2			OD Fan Motors (each)	Supply Blower Motor	Pwr Exh Motor	Pwr Conv Outlet	Electric Heat Field Installed Kit 2EK045*				MCA[1] (Amps)	Min Fuse[2]/ Breaker[3] Size (Amps)	Max Fuse[2]/ Breaker[3] Size (Amps)	Min Discon-nect Rating[4]		MCA[1] w/Pwr Exh (Amps)	Min Fuse[2]/ Breaker[3] Size w/ Pwr Exh (Amps)	Max Fuse[2]/ Breaker[3] Size w/ Pwr Exh (Amps)	Min Discon-nect Rating[4]/ Pwr Exh	
		RLA	LRA	MCC	RLA	LRA	MCC					Model	kW	Stages	Amps				FLA	LRA				FLA	LRA
09 (8.5)	208-3-60	14.5	98	23	14.5	98	23	2.3	7	1.1		None	-	-	-	44.2	45	50	47	266	46.4	50	50	49	271
												11725	12	1	33.3	85.8	90	90	85	299	88	90	90	88	304
												12525	18.6	1	51.6	108.7	110	110	106	317	110.9	125	125	109	322
												13225	24	1	66.6	127.5	150	150	123	332	129.7	150	150	126	337
												14225	31.8	2	88.3	119.1	125	125	115	325	121.9	125	125	117	330
	230-3-60	14.5	98	23	14.5	98	23	2.3	7.2	1		None	-	-	-	44.4	45	50	47	268	46.4	50	60	49	272
												11725	16	1	38.5	92.5	100	100	91	306	94.5	100	100	93	311
												12525	24.8	1	59.7	119	125	125	116	328	121	125	125	118	332
												13225	32	1	77	140.7	150	150	135	345	142.7	150	150	138	349
												14225	42.4	2	102	136.5	150	150	125	336	139	150	150	128	341
	460-3-60	6.3	55	10	6.3	55	10	1.3	3.6	0.5		None	-	-	-	20.4	25	25	22	147	21.4	25	25	23	149
												11746	16.5	1	19.8	45.2	50	50	44	167	46.2	50	50	46	169
												12846	27.8	1	33.4	62.2	70	70	60	180	63.2	70	70	61	182
												13346	33	1	39.7	70	70	70	67	186	71	80	80	68	189
												14246	41.7	2	50.2	67.3	70	70	60	180	68.5	70	70	61	182
	575-3-60	6	41	9	6	41	9	1.1	2.5	0.4		None	-	-	-	18.2	20	20	19	104	19	20	20	20	106
												11758	17	1	16.4	38.7	40	40	38	121	39.5	40	40	39	123
												13458	34	1	32.7	59.1	60	60	57	137	59.9	60	60	58	139
12 (10)	208-3-60	15.6	110	24	16	110	25	5.8	7	1.1		None	-	-	-	48.4	50	60	51	302	50.6	60	60	54	307
												11725	12	1	33.3	90	90	90	89	335	92.2	100	100	92	340
												12525	18.6	1	51.6	112.9	125	125	110	354	115.1	125	125	113	359
												13225	24	1	66.6	131.7	150	150	128	369	133.9	150	150	130	374
												14225	31.8	2	88.3	122.3	125	125	119	361	124.5	125	125	122	366
	230-3-60	15.6	110	24	16	110	25	5.2	7.2	1		None	-	-	-	48	50	60	51	301	50	50	60	53	305
												11725	16	1	38.5	96.1	100	100	95	339	98.1	100	100	97	344
												12525	24.8	1	59.7	122.6	125	125	119	361	124.6	125	125	122	365
												13225	32	1	77	144.3	150	150	139	378	146.3	150	150	141	382
												14225	42.4	2	102	136.5	150	150	129	369	139	150	150	131	374
	460-3-60	7.8	52	12	7.8	52	12	2.9	3.6	0.5		None	-	-	-	24.1	25	30	25	146	25.1	30	30	27	148
												11746	16.5	1	19.8	48.9	50	50	48	166	49.9	50	50	49	168
												12846	27.8	1	33.4	65.9	70	70	64	179	66.9	70	70	65	182
												13346	33	1	39.7	73.7	80	80	71	186	74.7	80	80	72	188
												14246	41.7	2	50.2	67.3	70	70	64	179	68.5	70	70	65	182
	575-3-60	5.8	38.9	9	5.7	38.9	9	2.2	2.5	0.4		None	-	-	-	17.7	20	20	19	107	18.5	20	20	20	109
												11758	17	1	16.4	38.2	40	40	37	123	39	40	40	38	125
												13458	34	1	32.7	58.6	60	60	56	140	59.4	60	60	57	141

1. Minimum Circuit Ampacity.
2. Dual Element, Time Delay Type.
3. HACR type per NEC.
4. Non-fused Disconnect, Verify on the unit nameplate that the disconnect is properly sized for the application. Units with field installed electric heat kits may exceed the factory installed disconnect amperage rating.

XXEA7-12 Standard Indoor Blower - With Powered Convenience Outlet

Size (Tons)	Nominal Unit Voltage	Compressor 1			Compressor 2			OD Fan Motors (each)	Supply Blower Motor	Pwr Exh Motor	Pwr Conv Outlet	Electric Heat Field Installed Kit 2EK045*				MCA[1] (Amps)	Min Fuse[2]/ Breaker[3] Size (Amps)	Max Fuse[2]/ Breaker[3] Size (Amps)	Min Discon-nect Rating[4]		MCA[1] w/Pwr Exh (Amps)	Min Fuse[2]/ Breaker[3] Size w/ Pwr Exh (Amps)	Max Fuse[2]/ Breaker[3] Size w/ Pwr Exh (Amps)	Min Discon-nect Rating[4]/ Pwr Exh	
		RLA	LRA	MCC	RLA	LRA	MCC					Model	kW	Stages	Amps				FLA	LRA				FLA	LRA
A7 (6)	208-3-60	17.6	136	27				2.3	5.2	1.1	8.6	None	-	-	-	33.8	35	50	34	168	34.9	35	50	35	170
												10625	4.9	1	13.6	50.8	60	60	49	181	51.9	60	60	51	184
												11125	7.9	1	21.9	61.2	70	70	59	189	62.3	70	70	60	192
												11625	12	1	33.3	75.4	80	80	72	201	76.5	80	80	73	203
	230-3-60	17.6	136	27				2.3	5.2	1	8.6	None	-	-	-	33.8	35	50	34	170	34.8	35	50	35	173
												10625	6.5	1	15.6	53.3	60	60	52	186	54.3	60	60	53	188
												11125	10.5	1	25.3	65.4	70	70	63	196	66.4	70	70	64	198
												11625	16	1	38.5	81.9	90	90	78	209	82.9	90	90	79	211
	460-3-60	8.5	66.1	13				1.3	2.6	0.5	8.6	None	-	-	-	16.7	20	25	17	84	17.2	20	25	17	85
												10646	6	1	7.2	25.7	30	30	25	91	26.2	30	30	26	92
												11146	11.5	1	13.8	34	35	35	33	97	34.5	35	35	33	99
												11446	14	1	16.8	37.7	40	40	36	100	38.2	40	40	37	102
	575-3-60	6.3	55.3	10				1.1	2	0.4	8.6	None	-	-	-	12.7	15	15	13	69	13.1	15	15	13	70
08 (7.5)	208-3-60	13.8	83.1	22	13.8	83.1	22	2.3	5.2	1.1	8.6	None	-	-	-	45.2	50	50	48	203	47.4	50	60	50	208
												11725	12	1	33.3	86.8	90	90	86	236	89	90	90	89	241
												12525	18.6	1	51.6	109.7	110	110	107	254	111.9	125	125	110	259
												13225	24	1	66.6	128.5	150	150	125	269	130.7	150	150	127	274
												14225	31.8	2	88.3	122.3	125	125	116	262	125	150	150	118	267
	230-3-60	13.8	83.1	22	13.8	83.1	22	2.3	5.2	1	8.6	None	-	-	-	45.2	50	50	48	206	47.2	50	60	50	210
												11725	16	1	38.5	93.3	100	100	92	244	95.3	100	100	95	249
												12525	24.8	1	59.7	119.8	125	125	117	265	121.8	125	125	119	270
												13225	32	1	77	141.5	150	150	137	283	143.5	150	150	139	287
												14225	42.4	2	102	139.4	150	150	126	274	141.9	150	150	129	278
	460-3-60	6.2	41	10	6.2	41	10	1.3	2.6	0.5	8.6	None	-	-	-	21.4	25	25	23	102	22.4	25	25	24	105
												11746	16.5	1	19.8	46.2	50	50	46	122	47.2	50	50	47	124
												12846	27.8	1	33.4	63.2	70	70	61	136	64.2	70	70	62	138
												13346	33	1	39.7	71	80	80	68	142	72	80	80	70	144
												14246	41.7	2	50.2	68.7	70	70	61	136	69.9	70	70	62	138
	575-3-60	4.9	33	8	4.9	33	8	1.1	2	0.4	8.6	None	-	-	-	16.9	20	20	18	82	17.7	20	20	19	84
												11758	17	1	16.4	37.4	40	40	37	99	38.2	40	40	38	101
												13458	34	1	32.7	57.8	60	60	56	115	58.6	60	60	57	117
09 (8.5)	208-3-60	14.5	98	23	14.5	98	23	2.3	5.2	1.1	8.6	None	-	-	-	46.7	50	60	50	232	48.9	50	60	52	237
												11725	12	1	33.3	88.3	90	90	88	266	90.5	100	100	90	271
												12525	18.6	1	51.6	111.2	125	125	109	284	113.4	125	125	111	289
												13225	24	1	66.6	130	150	150	126	299	132.2	150	150	129	304
												14225	31.8	2	88.3	122.3	125	125	118	291	125	150	150	120	296
	230-3-60	14.5	98	23	14.5	98	23	2.3	5.2	1	8.6	None	-	-	-	46.7	50	60	50	235	48.7	50	60	52	240
												11725	16	1	38.5	94.8	100	100	94	274	96.8	100	100	96	278
												12525	24.8	1	59.7	121.3	125	125	118	295	123.3	125	125	121	300
												13225	32	1	77	143	150	150	138	312	145	150	150	140	317
												14225	42.4	2	102	139.4	150	150	128	303	141.9	150	150	130	308
	460-3-60	6.3	55	10	6.3	55	10	1.3	2.6	0.5	8.6	None	-	-	-	21.6	25	25	23	130	22.6	25	25	24	133
												11746	16.5	1	19.8	46.4	50	50	46	150	47.4	50	50	47	152
												12846	27.8	1	33.4	63.4	70	70	61	164	64.4	70	70	63	166
												13346	33	1	39.7	71.2	80	80	69	170	72.2	80	80	70	172
												14246	41.7	2	50.2	68.7	70	70	61	164	69.9	70	70	63	166
	575-3-60	6	41	9	6	41	9	1.1	2	0.4	8.6	None	-	-	-	19.4	20	25	21	98	20.2	25	25	22	100
												11758	17	1	16.4	39.9	40	40	39	115	40.7	45	45	40	117
												13458	34	1	32.7	60.3	70	70	58	131	61.1	70	70	59	133

XXEA7-12 Standard Indoor Blower - With Powered Convenience Outlet (Continued)

Size (Tons)	Nominal Unit Voltage	Compressor 1			Compressor 2			OD Fan Motors (each)	Supply Blower Motor	Pwr Exh Motor	Pwr Conv Outlet	Electric Heat Field Installed Kit 2EK045*				MCA[1] (Amps)	Min Fuse[2]/ Breaker[3] Size (Amps)	Max Fuse[2]/ Breaker[3] Size (Amps)	Min Discon-nect Rating[4]		MCA[1] w/Pwr Exh (Amps)	Min Fuse[2]/ Breaker[3] Size w/ Pwr Exh (Amps)	Max Fuse[2]/ Breaker[3] Size w/ Pwr Exh (Amps)	Min Discon-nect Rating[4]/ Pwr Exh	
		RLA	LRA	MCC	RLA	LRA	MCC					Model	kW	Stages	Amps				FLA	LRA				FLA	LRA
12 (10)	208-3-60	15.6	110	24	16	110	25	5.8	5.2	1.1	8.6	None	-	-	-	50.9	60	60	54	269	53.1	60	60	56	274
												11725	12	1	33.3	92.5	100	100	92	302	94.7	100	100	95	307
												12525	18.6	1	51.6	115.4	125	125	113	320	117.6	125	125	116	325
												13225	24	1	66.6	134.2	150	150	131	335	136.4	150	150	133	340
												14225	31.8	2	88.3	124.8	125	125	122	328	127	150	150	124	333
	230-3-60	15.6	110	24	16	110	25	5.2	5.2	1	8.6	None	-	-	-	50.3	60	60	53	268	52.3	60	60	56	273
												11725	16	1	38.5	98.4	100	100	98	307	100.4	110	110	100	311
												12525	24.8	1	59.7	124.9	125	125	122	328	126.9	150	150	124	333
												13225	32	1	77	146.6	150	150	142	345	148.6	150	150	144	350
												14225	42.4	2	102	139.4	150	150	132	336	141.9	150	150	134	341
	460-3-60	7.8	52	12	7.8	52	12	2.9	2.6	0.5	8.6	None	-	-	-	25.3	30	30	27	130	26.3	30	30	28	132
												11746	16.5	1	19.8	50.1	60	60	50	149	51.1	60	60	51	152
												12846	27.8	1	33.4	67.1	70	70	65	163	68.1	70	70	66	165
												13346	33	1	39.7	74.9	80	80	72	169	75.9	80	80	74	172
												14246	41.7	2	50.2	68.7	70	70	65	163	69.9	70	70	66	165
	575-3-60	5.8	38.9	9	5.7	38.9	9	2.2	2	0.4	8.6	None	-	-	-	18.9	20	20	20	101	19.7	20	20	21	103
												11758	17	1	16.4	39.4	40	40	39	117	40.2	45	45	40	119
												13458	34	1	32.7	59.8	60	60	58	134	60.6	70	70	59	135
												With VFD													
A7 (6)	208-3-60	17.6	136	27				2.3	7	1.1	8.6	None	-	-	-	35.6	40	50	36	205	36.7	40	50	37	208
												10625	4.9	1	13.6	52.6	60	60	52	219	53.7	60	60	53	221
												11125	7.9	1	21.9	63	70	70	61	227	64.1	70	70	62	230
												11625	12	1	33.3	77.2	80	80	74	239	78.3	80	80	75	241
	230-3-60	17.6	136	27				2.3	7.2	1	8.6	None	-	-	-	35.8	40	50	36	207	36.8	40	50	37	209
												10625	6.5	1	15.6	55.3	60	60	54	223	56.3	60	70	55	225
												11125	10.5	1	25.3	67.4	70	70	65	232	68.4	70	70	66	235
												11625	16	1	38.5	83.9	90	90	80	246	84.9	90	90	82	248
	460-3-60	8.5	66.1	13				1.3	3.6	0.5	8.6	None	-	-	-	17.7	20	25	18	102	18.2	20	25	19	103
												10646	6	1	7.2	26.7	30	30	26	109	27.2	30	30	27	110
												11146	11.5	1	13.8	35	35	40	34	116	35.5	40	40	34	117
												11446	14	1	16.8	38.7	40	40	37	119	39.2	40	40	38	120
	575-3-60	6.3	55.3	10				1.1	2.5	0.4	8.6	None	-	-	-	13.2	15	15	13	77	13.6	15	15	14	78
08 (7.5)	208-3-60	13.8	83.1	22	13.8	83.1	22	2.3	7	1.1	8.6	None	-	-	-	47	50	60	50	240	49.2	50	60	53	245
												11725	12	1	33.3	88.6	90	90	88	274	90.8	100	100	91	279
												12525	18.6	1	51.6	111.5	125	125	109	292	113.7	125	125	112	297
												13225	24	1	66.6	130.3	150	150	127	307	132.5	150	150	129	312
												14225	31.8	2	88.3	124.5	125	125	118	299	127.3	150	150	121	304
	230-3-60	13.8	83.1	22	13.8	83.1	22	2.3	7.2	1	8.6	None	-	-	-	47.2	50	60	50	242	49.2	50	60	53	247
												11725	16	1	38.5	95.3	100	100	95	281	97.3	100	100	97	285
												12525	24.8	1	59.7	121.8	125	125	119	302	123.8	125	125	121	307
												13225	32	1	77	143.5	150	150	139	319	145.5	150	150	141	324
												14225	42.4	2	102	141.9	150	150	129	310	144.4	150	150	131	315
	460-3-60	6.2	41	10	6.2	41	10	1.3	3.6	0.5	8.6	None	-	-	-	22.4	25	25	24	121	23.4	25	25	25	123
												11746	16.5	1	19.8	47.2	50	50	47	141	48.2	50	50	48	143
												12846	27.8	1	33.4	64.2	70	70	62	154	65.2	70	70	63	156
												13346	33	1	39.7	72	80	80	70	161	73	80	80	71	163
												14246	41.7	2	50.2	69.9	70	70	62	154	71.2	80	80	63	156
	575-3-60	4.9	33	8	4.9	33	8	1.1	2.5	0.4	8.6	None	-	-	-	17.4	20	20	19	90	18.2	20	20	20	92
												11758	17	1	16.4	37.9	40	40	37	107	38.7	40	40	38	108
												13458	34	1	32.7	58.3	60	60	56	123	59.1	60	60	57	125

XXEA7-12 Standard Indoor Blower - With Powered Convenience Outlet (Continued)

Size (Tons)	Nominal Unit Voltage	Compressor 1			Compressor 2			OD Fan Motors (each)	Supply Blower Motor	Pwr Exh Motor	Pwr Conv Outlet	Electric Heat Field Installed Kit 2EK045*				MCA[1] (Amps)	Min Fuse[2]/ Breaker[3] Size (Amps)	Max Fuse[2]/ Breaker[3] Size (Amps)	Min Discon-nect Rating[4]		MCA[1] w/Pwr Exh (Amps)	Min Fuse[2]/ Breaker[3] Size w/ Pwr Exh (Amps)	Max Fuse[2]/ Breaker[3] Size w/ Pwr Exh (Amps)	Min Discon-nect Rating[4]/ Pwr Exh	
		RLA	LRA	MCC	RLA	LRA	MCC					Model	kW	Stages	Amps				FLA	LRA				FLA	LRA
09 (8.5)	208-3-60	14.5	98	23	14.5	98	23	2.3	7	1.1	8.6	None	-	-	-	48.5	50	60	52	270	50.7	60	60	54	275
												11725	12	1	33.3	90.1	100	100	90	303	92.3	100	100	92	308
												12525	18.6	1	51.6	113	125	125	111	322	115.2	125	125	114	327
												13225	24	1	66.6	131.8	150	150	128	337	134	150	150	131	342
												14225	31.8	2	88.3	124.5	125	125	120	329	127.3	150	150	122	334
	230-3-60	14.5	98	23	14.5	98	23	2.3	7.2	1	8.6	None	-	-	-	48.7	50	60	52	272	50.7	60	60	54	277
												11725	16	1	38.5	96.8	100	100	96	311	98.8	100	100	98	315
												12525	24.8	1	59.7	123.3	125	125	121	332	125.3	150	150	123	336
												13225	32	1	77	145	150	150	140	349	147	150	150	143	354
												14225	42.4	2	102	141.9	150	150	130	340	144.4	150	150	132	345
	460-3-60	6.3	55	10	6.3	55	10	1.3	3.6	0.5	8.6	None	-	-	-	22.6	25	25	24	149	23.6	25	25	25	151
												11746	16.5	1	19.8	47.4	50	50	47	169	48.4	50	50	48	171
												12846	27.8	1	33.4	64.4	70	70	63	182	65.4	70	70	64	184
												13346	33	1	39.7	72.2	80	80	70	189	73.2	80	80	71	191
												14246	41.7	2	50.2	69.9	70	70	63	182	71.2	80	80	64	184
	575-3-60	6	41	9	6	41	9	1.1	2.5	0.4	8.6	None	-	-	-	19.9	20	25	21	106	20.7	25	25	22	108
												11758	17	1	16.4	40.4	45	45	40	123	41.2	45	45	41	124
												13458	34	1	32.7	60.8	70	70	59	139	61.6	70	70	60	141
12 (10)	208-3-60	15.6	110	24	16	110	25	5.8	7	1.1	8.6	None	-	-	-	52.7	60	60	56	306	54.9	60	60	59	311
												11725	12	1	33.3	94.3	100	100	94	340	96.5	100	100	97	345
												12525	18.6	1	51.6	117.2	125	125	115	358	119.4	125	125	118	363
												13225	24	1	66.6	136	150	150	133	373	138.2	150	150	135	378
												14225	31.8	2	88.3	126.6	150	150	124	366	128.8	150	150	127	371
	230-3-60	15.6	110	24	16	110	25	5.2	7.2	1	8.6	None	-	-	-	52.3	60	60	56	305	54.3	60	70	58	310
												11725	16	1	38.5	100.4	110	110	100	344	102.4	110	110	102	348
												12525	24.8	1	59.7	126.9	150	150	124	365	128.9	150	150	127	369
												13225	32	1	77	148.6	150	150	144	382	150.6	175	175	146	387
												14225	42.4	2	102	141.9	150	150	134	373	144.4	150	150	136	378
	460-3-60	7.8	52	12	7.8	52	12	2.9	3.6	0.5	8.6	None	-	-	-	26.3	30	30	28	148	27.3	30	30	29	150
												11746	16.5	1	19.8	51.1	60	60	51	168	52.1	60	60	52	170
												12846	27.8	1	33.4	68.1	70	70	66	181	69.1	70	70	68	184
												13346	33	1	39.7	75.9	80	80	74	188	76.9	80	80	75	190
												14246	41.7	2	50.2	69.9	70	70	66	181	71.2	80	80	68	184
	575-3-60	5.8	38.9	9	5.7	38.9	9	2.2	2.5	0.4	8.6	None	-	-	-	19.4	20	25	21	109	20.2	25	25	22	110
												11758	17	1	16.4	39.9	40	40	39	125	40.7	45	45	40	127
												13458	34	1	32.7	60.3	70	70	58	141	61.1	70	70	59	143

1. Minimum Circuit Ampacity.
2. Dual Element, Time Delay Type.
3. HACR type per NEC.
4. Non-fused Disconnect, Verify on the unit nameplate that the disconnect is properly sized for the application. Units with field installed electric heat kits may exceed the factory installed disconnect amperage rating.

XXEA7-12 Medium Indoor Blower - Without Powered Convenience Outlet

Size (Tons)	Nominal Unit Voltage	Compressor 1			Compressor 2			OD Fan Motors (each)	Supply Blower Motor	Pwr Exh Motor	Pwr Conv Outlet	Electric Heat Field Installed Kit 2EK045*				MCA[1] (Amps)	Min Fuse[2]/ Breaker[3] Size (Amps)	Max Fuse[2]/ Breaker[3] Size (Amps)	Min Discon-nect Rating[4]		MCA[1] w/Pwr Exh (Amps)	Min Fuse[2]/ Breaker[3] Size w/ Pwr Exh (Amps)	Max Fuse[2]/ Breaker[3] Size w/ Pwr Exh (Amps)	Min Discon-nect Rating[4]/ Pwr Exh	
		RLA	LRA	MCC	RLA	LRA	MCC					Model	kW	Stages	Amps				FLA	LRA				FLA	LRA
A7 (6)	208-3-60	17.6	136	27				2.3	7.5	1.1		None	-	-	-	31.8	35	45	32	189	32.9	35	50	33	192
												10625	4.9	1	13.6	48.8	50	60	47	203	49.9	50	60	48	206
												11125	7.9	1	21.9	59.2	60	70	57	211	60.3	70	70	58	214
												11625	12	1	33.3	73.4	80	80	70	223	74.5	80	80	71	225
	230-3-60	17.6	136	27				2.3	7.5	1		None	-	-	-	31.8	35	45	32	196	32.8	35	50	33	198
												10625	6.5	1	15.6	51.3	60	60	49	212	52.3	60	60	51	214
												11125	10.5	1	25.3	63.4	70	70	61	221	64.4	70	70	62	224
												11625	16	1	38.5	79.9	80	80	76	235	80.9	90	90	77	237
	460-3-60	8.5	66.1	13				1.3	3.4	0.5		None	-	-	-	15.3	20	20	15	97	15.8	20	20	16	98
												10646	6	1	7.2	24.3	25	30	23	104	24.8	25	30	24	105
												11146	11.5	1	13.8	32.6	35	35	31	110	33.1	35	35	32	111
												11446	14	1	16.8	36.3	40	40	35	113	36.8	40	40	35	114
	575-3-60	6.3	55.3	10				1.1	2.8	0.4		None	-	-	-	11.8	15	15	12	80	12.2	15	15	12	81
08 (7.5)	208-3-60	13.8	83.1	22	13.8	83.1	22	2.3	5.2	1.1		None	-	-	-	40.9	45	50	43	198	43.1	45	50	46	203
												11725	12	1	33.3	82.5	90	90	81	232	84.7	90	90	84	237
												12525	18.6	1	51.6	105.4	110	110	102	250	107.6	110	110	105	255
												13225	24	1	66.6	124.2	125	125	120	265	126.4	150	150	122	270
												14225	31.8	2	88.3	116.9	125	125	111	257	119.6	125	125	114	262
	230-3-60	13.8	83.1	22	13.8	83.1	22	2.3	5.2	1		None	-	-	-	40.9	45	50	43	201	42.9	45	50	45	206
												11725	16	1	38.5	89	90	90	87	240	91	100	100	90	244
												12525	24.8	1	59.7	115.5	125	125	112	261	117.5	125	125	114	266
												13225	32	1	77	137.2	150	150	132	278	139.2	150	150	134	283
												14225	42.4	2	102	134	150	150	121	269	136.5	150	150	124	274
	460-3-60	6.2	41	10	6.2	41	10	1.3	2.6	0.5		None	-	-	-	19.2	20	25	20	100	20.2	25	25	21	103
												11746	16.5	1	19.8	44	45	45	43	120	45	45	45	44	122
												12846	27.8	1	33.4	61	70	70	59	134	62	70	70	60	136
												13346	33	1	39.7	68.8	70	70	66	140	69.8	70	70	67	142
												14246	41.7	2	50.2	66	70	70	59	134	67.3	70	70	60	136
	575-3-60	4.9	33	8	4.9	33	8	1.1	2	0.4		None	-	-	-	15.2	20	20	16	81	16	20	20	17	83
												11758	17	1	16.4	35.7	40	40	35	97	36.5	40	40	36	99
												13458	34	1	32.7	56.1	60	60	54	113	56.9	60	60	55	115
09 (8.5)	208-3-60	14.5	98	23	14.5	98	23	2.3	5.2	1.1		None	-	-	-	42.4	45	50	45	228	44.6	45	50	47	233
												11725	12	1	33.3	84	90	90	83	261	86.2	90	90	85	266
												12525	18.6	1	51.6	106.9	110	110	104	280	109.1	110	110	106	285
												13225	24	1	66.6	125.7	150	150	121	295	127.9	150	150	124	300
												14225	31.8	2	88.3	116.9	125	125	113	287	119.6	125	125	115	292
	230-3-60	14.5	98	23	14.5	98	23	2.3	5.2	1		None	-	-	-	42.4	45	50	45	231	44.4	45	50	47	236
												11725	16	1	38.5	90.5	100	100	89	270	92.5	100	100	91	274
												12525	24.8	1	59.7	117	125	125	113	291	119	125	125	116	295
												13225	32	1	77	138.7	150	150	133	308	140.7	150	150	135	313
												14225	42.4	2	102	134	150	150	123	299	136.5	150	150	125	304
	460-3-60	6.3	55	10	6.3	55	10	1.3	2.6	0.5		None	-	-	-	19.4	20	25	20	128	20.4	25	25	22	131
												11746	16.5	1	19.8	44.2	45	45	43	148	45.2	50	50	44	150
												12846	27.8	1	33.4	61.2	70	70	59	162	62.2	70	70	60	164
												13346	33	1	39.7	69	70	70	66	168	70	70	70	67	170
												14246	41.7	2	50.2	66	70	70	59	162	67.3	70	70	60	164
	575-3-60	6	41	9	6	41	9	1.1	2	0.4		None	-	-	-	17.7	20	20	19	97	18.5	20	20	20	99
												11758	17	1	16.4	38.2	40	40	37	113	39	40	40	38	115
												13458	34	1	32.7	58.6	60	60	56	129	59.4	60	60	57	131

XXEA7-12 Medium Indoor Blower - Without Powered Convenience Outlet (Continued)

Size (Tons)	Nominal Unit Voltage	Compressor 1			Compressor 2			OD Fan Motors (each)	Supply Blower Motor	Pwr Exh Motor	Pwr Conv Outlet	Electric Heat Field Installed Kit 2EK045*				MCA[1] (Amps)	Min Fuse[2]/ Breaker[3] Size (Amps)	Max Fuse[2]/ Breaker[3] Size (Amps)	Min Discon-nect Rating[4]		MCA[1] w/Pwr Exh (Amps)	Min Fuse[2]/ Breaker[3] Size w/ Pwr Exh (Amps)	Max Fuse[2]/ Breaker[3] Size w/ Pwr Exh (Amps)	Min Discon-nect Rating[4]/ Pwr Exh	
		RLA	LRA	MCC	RLA	LRA	MCC					Model	kW	Stages	Amps				FLA	LRA				FLA	LRA
12 (10)	208-3-60	15.6	110	24	16	110	25	5.8	10.2	1.1		None	-	-	-	51.6	60	60	55	305	53.8	60	60	57	310
												11725	12	1	33.3	93.2	100	100	93	339	95.4	100	100	96	344
												12525	18.6	1	51.6	116.1	125	125	114	357	118.3	125	125	117	362
												13225	24	1	66.6	134.9	150	150	131	372	137.1	150	150	134	377
												14225	31.8	2	88.3	125.5	150	150	123	364	127.7	150	150	125	369
	230-3-60	15.6	110	24	16	110	25	5.2	10.2	1		None	-	-	-	51	60	60	54	308	53	60	60	56	313
												11725	16	1	38.5	99.1	100	100	98	347	101.1	110	110	101	351
												12525	24.8	1	59.7	125.6	150	150	123	368	127.6	150	150	125	372
												13225	32	1	77	147.3	150	150	143	385	149.3	150	150	145	390
												14225	42.4	2	102	140.3	150	150	132	376	142.8	150	150	135	381
	460-3-60	7.8	52	12	7.8	52	12	2.9	4.8	0.5		None	-	-	-	25.3	30	30	27	150	26.3	30	30	28	152
												11746	16.5	1	19.8	50.1	60	60	50	169	51.1	60	60	51	172
												12846	27.8	1	33.4	67.1	70	70	65	183	68.1	70	70	66	185
												13346	33	1	39.7	74.9	80	80	72	189	75.9	80	80	74	191
												14246	41.7	2	50.2	68.8	70	70	65	183	70	70	70	66	185
	575-3-60	5.8	38.9	9	5.7	38.9	9	2.2	3.4	0.4		None	-	-	-	18.6	20	20	20	117	19.4	20	20	21	119
												11758	17	1	16.4	39.1	40	40	39	133	39.9	40	40	39	135
												13458	34	1	32.7	59.5	60	60	57	149	60.3	70	70	58	151
												With VFD													
A7 (6)	208-3-60	17.6	136	27				2.3	8.9	1.1		None	-	-	-	33.2	35	50	33	218	34.3	35	50	34	220
												10625	4.9	1	13.6	50.2	60	60	49	231	51.3	60	60	50	234
												11125	7.9	1	21.9	60.6	70	70	58	240	61.7	70	70	60	242
												11625	12	1	33.3	74.8	80	80	71	251	75.9	80	80	73	253
	230-3-60	17.6	136	27				2.3	8.2	1		None	-	-	-	32.5	35	50	32	220	33.5	35	50	33	222
												10625	6.5	1	15.6	52	60	60	50	236	53	60	60	51	238
												11125	10.5	1	25.3	64.1	70	70	61	245	65.1	70	70	63	248
												11625	16	1	38.5	80.6	90	90	77	259	81.6	90	90	78	261
	460-3-60	8.5	66.1	13				1.3	4.1	0.5		None	-	-	-	16	20	20	16	104	16.5	20	20	17	105
												10646	6	1	7.2	25	25	30	24	111	25.5	30	30	25	112
												11146	11.5	1	13.8	33.3	35	35	32	117	33.8	35	35	32	118
												11446	14	1	16.8	37	40	40	35	120	37.5	40	40	36	121
	575-3-60	6.3	55.3	10				1.1	3.2	0.4		None	-	-	-	12.2	15	15	12	84	12.6	15	15	13	85
08 (7.5)	208-3-60	13.8	83.1	22	13.8	83.1	22	2.3	7	1.1		None	-	-	-	42.7	45	50	45	236	44.9	45	50	48	241
												11725	12	1	33.3	84.3	90	90	83	269	86.5	90	90	86	274
												12525	18.6	1	51.6	107.2	110	110	104	288	109.4	110	110	107	293
												13225	24	1	66.6	126	150	150	122	303	128.2	150	150	124	308
												14225	31.8	2	88.3	119.1	125	125	113	295	121.9	125	125	116	300
	230-3-60	13.8	83.1	22	13.8	83.1	22	2.3	7.2	1		None	-	-	-	42.9	45	50	45	238	44.9	45	50	48	243
												11725	16	1	38.5	91	100	100	90	277	93	100	100	92	281
												12525	24.8	1	59.7	117.5	125	125	114	298	119.5	125	125	116	302
												13225	32	1	77	139.2	150	150	134	315	141.2	150	150	136	320
												14225	42.4	2	102	136.5	150	150	124	306	139	150	150	126	311
	460-3-60	6.2	41	10	6.2	41	10	1.3	3.6	0.5		None	-	-	-	20.2	25	25	21	119	21.2	25	25	23	121
												11746	16.5	1	19.8	45	45	45	44	139	46	50	50	45	141
												12846	27.8	1	33.4	62	70	70	60	152	63	70	70	61	154
												13346	33	1	39.7	69.8	70	70	67	158	70.8	80	80	68	161
												14246	41.7	2	50.2	67.3	70	70	60	152	68.5	70	70	61	154
	575-3-60	4.9	33	8	4.9	33	8	1.1	2.5	0.4		None	-	-	-	15.7	20	20	17	88	16.5	20	20	18	90
												11758	17	1	16.4	36.2	40	40	36	105	37	40	40	36	107
												13458	34	1	32.7	56.6	60	60	54	121	57.4	60	60	55	123

XXEA7-12 Medium Indoor Blower - Without Powered Convenience Outlet (Continued)

Size (Tons)	Nominal Unit Voltage	Compressor 1			Compressor 2			OD Fan Motors (each)	Supply Blower Motor	Pwr Exh Motor	Pwr Conv Outlet	Electric Heat Field Installed Kit 2EK045*				MCA[1] (Amps)	Min Fuse[2]/ Breaker[3] Size (Amps)	Max Fuse[2]/ Breaker[3] Size (Amps)	Min Discon-nect Rating[4]		MCA[1] w/Pwr Exh (Amps)	Min Fuse[2]/ Breaker[3] Size w/ Pwr Exh (Amps)	Max Fuse[2]/ Breaker[3] Size w/ Pwr Exh (Amps)	Min Discon-nect Rating[4]/ Pwr Exh	
		RLA	LRA	MCC	RLA	LRA	MCC					Model	kW	Stages	Amps				FLA	LRA				FLA	LRA
09 (8.5)	208-3-60	14.5	98	23	14.5	98	23	2.3	7	1.1		None	-	-	-	44.2	45	50	47	266	46.4	50	50	49	271
												11725	12	1	33.3	85.8	90	90	85	299	88	90	90	88	304
												12525	18.6	1	51.6	108.7	110	110	106	317	110.9	125	125	109	322
												13225	24	1	66.6	127.5	150	150	123	332	129.7	150	150	126	337
												14225	31.8	2	88.3	119.1	125	125	115	325	121.9	125	125	117	330
	230-3-60	14.5	98	23	14.5	98	23	2.3	7.2	1		None	-	-	-	44.4	45	50	47	268	46.4	50	60	49	272
												11725	16	1	38.5	92.5	100	100	91	306	94.5	100	100	93	311
												12525	24.8	1	59.7	119	125	125	116	328	121	125	125	118	332
												13225	32	1	77	140.7	150	150	135	345	142.7	150	150	138	349
												14225	42.4	2	102	136.5	150	150	125	336	139	150	150	128	341
	460-3-60	6.3	55	10	6.3	55	10	1.3	3.6	0.5		None	-	-	-	20.4	25	25	22	147	21.4	25	25	23	149
												11746	16.5	1	19.8	45.2	50	50	44	167	46.2	50	50	46	169
												12846	27.8	1	33.4	62.2	70	70	60	180	63.2	70	70	61	182
												13346	33	1	39.7	70	70	70	67	186	71	80	80	68	189
												14246	41.7	2	50.2	67.3	70	70	60	180	68.5	70	70	61	182
	575-3-60	6	41	9	6	41	9	1.1	2.5	0.4		None	-	-	-	18.2	20	20	19	104	19	20	20	20	106
												11758	17	1	16.4	38.7	40	40	38	121	39.5	40	40	39	123
												13458	34	1	32.7	59.1	60	60	57	137	59.9	60	60	58	139
12 (10)	208-3-60	15.6	110	24	16	110	25	5.8	9.9	1.1		None	-	-	-	51.3	60	60	54	315	53.5	60	60	57	320
												11725	12	1	33.3	92.9	100	100	93	348	95.1	100	100	95	353
												12525	18.6	1	51.6	115.8	125	125	114	366	118	125	125	116	371
												13225	24	1	66.6	134.6	150	150	131	381	136.8	150	150	134	386
												14225	31.8	2	88.3	125.2	150	150	122	374	127.4	150	150	125	379
	230-3-60	15.6	110	24	16	110	25	5.2	9.4	1		None	-	-	-	50.2	60	60	53	320	52.2	60	60	55	324
												11725	16	1	38.5	98.3	100	100	97	358	100.3	110	110	100	363
												12525	24.8	1	59.7	124.8	125	125	122	379	126.8	150	150	124	384
												13225	32	1	77	146.5	150	150	142	397	148.5	150	150	144	401
												14225	42.4	2	102	139.3	150	150	131	388	141.8	150	150	134	392
	460-3-60	7.8	52	12	7.8	52	12	2.9	4.7	0.5		None	-	-	-	25.2	30	30	27	155	26.2	30	30	28	158
												11746	16.5	1	19.8	50	50	50	49	175	51	60	60	51	177
												12846	27.8	1	33.4	67	70	70	65	189	68	70	70	66	191
												13346	33	1	39.7	74.8	80	80	72	195	75.8	80	80	73	197
												14246	41.7	2	50.2	68.6	70	70	65	189	69.9	70	70	66	191
	575-3-60	5.8	38.9	9	5.7	38.9	9	2.2	4.3	0.4		None	-	-	-	19.5	20	25	21	129	20.3	25	25	22	131
												11758	17	1	16.4	40	40	40	40	146	40.8	45	45	40	147
												13458	34	1	32.7	60.4	70	70	58	162	61.2	70	70	59	164

1. Minimum Circuit Ampacity.
2. Dual Element, Time Delay Type.
3. HACR type per NEC.
4. Non-fused Disconnect, Verify on the unit nameplate that the disconnect is properly sized for the application. Units with field installed electric heat kits may exceed the factory installed disconnect amperage rating.

XXEA7-12 Medium Indoor Blower - With Powered Convenience Outlet

Size (Tons)	Nominal Unit Voltage	Compressor 1			Compressor 2			OD Fan Motors (each)	Supply Blower Motor	Pwr Exh Motor	Pwr Conv Outlet	Electric Heat Field Installed Kit 2EK045*				MCA[1] (Amps)	Min Fuse[2]/ Breaker[3] Size (Amps)	Max Fuse[2]/ Breaker[3] Size (Amps)	Min Discon-nect Rating[4]		MCA[1] w/Pwr Exh (Amps)	Min Fuse[2]/ Breaker[3] Size w/ Pwr Exh (Amps)	Max Fuse[2]/ Breaker[3] Size w/ Pwr Exh (Amps)	Min Discon-nect Rating[4]/ Pwr Exh	
		RLA	LRA	MCC	RLA	LRA	MCC					Model	kW	Stages	Amps				FLA	LRA				FLA	LRA
A7 (6)	208-3-60	17.6	136	27				2.3	7.5	1.1	8.6	None	-	-	-	36.1	40	50	36	194	37.2	40	50	38	196
												10625	4.9	1	13.6	53.1	60	60	52	207	54.2	60	60	53	210
												11125	7.9	1	21.9	63.5	70	70	62	216	64.6	70	70	63	218
												11625	12	1	33.3	77.7	80	80	75	227	78.8	80	80	76	230
	230-3-60	17.6	136	27				2.3	7.5	1	8.6	None	-	-	-	36.1	40	50	36	200	37.1	40	50	38	203
												10625	6.5	1	15.6	55.6	60	60	54	216	56.6	60	70	56	218
												11125	10.5	1	25.3	67.7	70	70	66	226	68.7	70	80	67	228
												11625	16	1	38.5	84.2	90	90	81	239	85.2	90	90	82	241
	460-3-60	8.5	66.1	13				1.3	3.4	0.5	8.6	None	-	-	-	17.5	20	25	18	99	18	20	25	18	100
												10646	6	1	7.2	26.5	30	30	26	106	27	30	30	27	107
												11146	11.5	1	13.8	34.8	35	35	34	112	35.3	40	40	34	114
												11446	14	1	16.8	38.5	40	40	37	115	39	40	40	38	117
	575-3-60	6.3	55.3	10				1.1	2.8	0.4	8.6	None	-	-	-	13.5	15	15	14	81	13.9	15	15	14	82
08 (7.5)	208-3-60	13.8	83.1	22	13.8	83.1	22	2.3	5.2	1.1	8.6	None	-	-	-	45.2	50	50	48	203	47.4	50	60	50	208
												11725	12	1	33.3	86.8	90	90	86	236	89	90	90	89	241
												12525	18.6	1	51.6	109.7	110	110	107	254	111.9	125	125	110	259
												13225	24	1	66.6	128.5	150	150	125	269	130.7	150	150	127	274
												14225	31.8	2	88.3	122.3	125	125	116	262	125	150	150	118	267
	230-3-60	13.8	83.1	22	13.8	83.1	22	2.3	5.2	1	8.6	None	-	-	-	45.2	50	50	48	206	47.2	50	60	50	210
												11725	16	1	38.5	93.3	100	100	92	244	95.3	100	100	95	249
												12525	24.8	1	59.7	119.8	125	125	117	265	121.8	125	125	119	270
												13225	32	1	77	141.5	150	150	137	283	143.5	150	150	139	287
												14225	42.4	2	102	139.4	150	150	126	274	141.9	150	150	129	278
	460-3-60	6.2	41	10	6.2	41	10	1.3	2.6	0.5	8.6	None	-	-	-	21.4	25	25	23	102	22.4	25	25	24	105
												11746	16.5	1	19.8	46.2	50	50	46	122	47.2	50	50	47	124
												12846	27.8	1	33.4	63.2	70	70	61	136	64.2	70	70	62	138
												13346	33	1	39.7	71	80	80	68	142	72	80	80	70	144
												14246	41.7	2	50.2	68.7	70	70	61	136	69.9	70	70	62	138
	575-3-60	4.9	33	8	4.9	33	8	1.1	2	0.4	8.6	None	-	-	-	16.9	20	20	18	82	17.7	20	20	19	84
												11758	17	1	16.4	37.4	40	40	37	99	38.2	40	40	38	101
												13458	34	1	32.7	57.8	60	60	56	115	58.6	60	60	57	117
09 (8.5)	208-3-60	14.5	98	23	14.5	98	23	2.3	5.2	1.1	8.6	None	-	-	-	46.7	50	60	50	232	48.9	50	60	52	237
												11725	12	1	33.3	88.3	90	90	88	266	90.5	100	100	90	271
												12525	18.6	1	51.6	111.2	125	125	109	284	113.4	125	125	111	289
												13225	24	1	66.6	130	150	150	126	299	132.2	150	150	129	304
												14225	31.8	2	88.3	122.3	125	125	118	291	125	150	150	120	296
	230-3-60	14.5	98	23	14.5	98	23	2.3	5.2	1	8.6	None	-	-	-	46.7	50	60	50	235	48.7	50	60	52	240
												11725	16	1	38.5	94.8	100	100	94	274	96.8	100	100	96	278
												12525	24.8	1	59.7	121.3	125	125	118	295	123.3	125	125	121	300
												13225	32	1	77	143	150	150	138	312	145	150	150	140	317
												14225	42.4	2	102	139.4	150	150	128	303	141.9	150	150	130	308
	460-3-60	6.3	55	10	6.3	55	10	1.3	2.6	0.5	8.6	None	-	-	-	21.6	25	25	23	130	22.6	25	25	24	133
												11746	16.5	1	19.8	46.4	50	50	46	150	47.4	50	50	47	152
												12846	27.8	1	33.4	63.4	70	70	61	164	64.4	70	70	63	166
												13346	33	1	39.7	71.2	80	80	69	170	72.2	80	80	70	172
												14246	41.7	2	50.2	68.7	70	70	61	164	69.9	70	70	63	166
	575-3-60	6	41	9	6	41	9	1.1	2	0.4	8.6	None	-	-	-	19.4	20	25	21	98	20.2	25	25	22	100
												11758	17	1	16.4	39.9	40	40	39	115	40.7	45	45	40	117
												13458	34	1	32.7	60.3	70	70	58	131	61.1	70	70	59	133

XXEA7-12 Medium Indoor Blower - With Powered Convenience Outlet (Continued)

Size (Tons)	Nominal Unit Voltage	Compressor 1			Compressor 2			OD Fan Motors (each)	Supply Blower Motor	Pwr Exh Motor	Pwr Conv Outlet	Electric Heat Field Installed Kit 2EK045*				MCA[1] (Amps)	Min Fuse[2]/ Breaker[3] Size (Amps)	Max Fuse[2]/ Breaker[3] Size (Amps)	Min Discon-nect Rating[4]		MCA[1] w/Pwr Exh (Amps)	Min Fuse[2]/ Breaker[3] Size w/ Pwr Exh (Amps)	Max Fuse[2]/ Breaker[3] Size w/ Pwr Exh (Amps)	Min Discon-nect Rating[4]/ Pwr Exh	
		RLA	LRA	MCC	RLA	LRA	MCC					Model	kW	Stages	Amps				FLA	LRA				FLA	LRA
12 (10)	208-3-60	15.6	110	24	16	110	25	5.8	10.2	1.1	8.6	None	-	-	-	55.9	60	70	60	310	58.1	60	70	62	315
												11725	12	1	33.3	97.5	100	100	98	343	99.7	100	100	101	348
												12525	18.6	1	51.6	120.4	125	125	119	361	122.6	125	125	122	366
												13225	24	1	66.6	139.2	150	150	136	376	141.4	150	150	139	381
												14225	31.8	2	88.3	129.8	150	150	128	369	132	150	150	130	374
	230-3-60	15.6	110	24	16	110	25	5.2	10.2	1	8.6	None	-	-	-	55.3	60	70	59	312	57.3	60	70	61	317
												11725	16	1	38.5	103.4	110	110	103	351	105.4	110	110	106	355
												12525	24.8	1	59.7	129.9	150	150	128	372	131.9	150	150	130	377
												13225	32	1	77	151.6	175	175	148	389	153.6	175	175	150	394
												14225	42.4	2	102	145.6	150	150	137	380	148.1	150	150	140	385
	460-3-60	7.8	52	12	7.8	52	12	2.9	4.8	0.5	8.6	None	-	-	-	27.5	30	35	29	152	28.5	30	35	30	154
												11746	16.5	1	19.8	52.3	60	60	52	171	53.3	60	60	53	174
												12846	27.8	1	33.4	69.3	70	70	68	185	70.3	80	80	69	187
												13346	33	1	39.7	77.1	80	80	75	191	78.1	80	80	76	194
												14246	41.7	2	50.2	71.4	80	80	68	185	72.7	80	80	69	187
	575-3-60	5.8	38.9	9	5.7	38.9	9	2.2	3.4	0.4	8.6	None	-	-	-	20.3	25	25	22	118	21.1	25	25	23	120
												11758	17	1	16.4	40.8	45	45	40	135	41.6	45	45	41	137
												13458	34	1	32.7	61.2	70	70	59	151	62	70	70	60	153
												With VFD													
A7 (6)	208-3-60	17.6	136	27				2.3	8.9	1.1	8.6	None	-	-	-	37.5	40	50	38	222	38.6	40	50	39	224
												10625	4.9	1	13.6	54.5	60	60	54	236	55.6	60	60	55	238
												11125	7.9	1	21.9	64.9	70	70	63	244	66	70	70	65	246
												11625	12	1	33.3	79.1	80	80	76	255	80.2	90	90	78	258
	230-3-60	17.6	136	27				2.3	8.2	1	8.6	None	-	-	-	36.8	40	50	37	224	37.8	40	50	38	227
												10625	6.5	1	15.6	56.3	60	70	55	240	57.3	60	70	56	242
												11125	10.5	1	25.3	68.4	70	70	66	250	69.4	70	80	68	252
												11625	16	1	38.5	84.9	90	90	82	263	85.9	90	90	83	265
	460-3-60	8.5	66.1	13				1.3	4.1	0.5	8.6	None	-	-	-	18.2	20	25	19	106	18.7	20	25	19	107
												10646	6	1	7.2	27.2	30	30	27	113	27.7	30	30	27	114
												11146	11.5	1	13.8	35.5	40	40	34	119	36	40	40	35	121
												11446	14	1	16.8	39.2	40	40	38	122	39.7	40	40	38	124
	575-3-60	6.3	55.3	10				1.1	3.2	0.4	8.6	None	-	-	-	13.9	15	20	14	85	14.3	15	20	15	86
08 (7.5)	208-3-60	13.8	83.1	22	13.8	83.1	22	2.3	7	1.1	8.6	None	-	-	-	47	50	60	50	240	49.2	50	60	53	245
												11725	12	1	33.3	88.6	90	90	88	274	90.8	100	100	91	279
												12525	18.6	1	51.6	111.5	125	125	109	292	113.7	125	125	112	297
												13225	24	1	66.6	130.3	150	150	127	307	132.5	150	150	129	312
												14225	31.8	2	88.3	124.5	125	125	118	299	127.3	150	150	121	304
	230-3-60	13.8	83.1	22	13.8	83.1	22	2.3	7.2	1	8.6	None	-	-	-	47.2	50	60	50	242	49.2	50	60	53	247
												11725	16	1	38.5	95.3	100	100	95	281	97.3	100	100	97	285
												12525	24.8	1	59.7	121.8	125	125	119	302	123.8	125	125	121	307
												13225	32	1	77	143.5	150	150	139	319	145.5	150	150	141	324
												14225	42.4	2	102	141.9	150	150	129	310	144.4	150	150	131	315
	460-3-60	6.2	41	10	6.2	41	10	1.3	3.6	0.5	8.6	None	-	-	-	22.4	25	25	24	121	23.4	25	25	25	123
												11746	16.5	1	19.8	47.2	50	50	47	141	48.2	50	50	48	143
												12846	27.8	1	33.4	64.2	70	70	62	154	65.2	70	70	63	156
												13346	33	1	39.7	72	80	80	70	161	73	80	80	71	163
												14246	41.7	2	50.2	69.9	70	70	62	154	71.2	80	80	63	156
	575-3-60	4.9	33	8	4.9	33	8	1.1	2.5	0.4	8.6	None	-	-	-	17.4	20	20	19	90	18.2	20	20	20	92
												11758	17	1	16.4	37.9	40	40	37	107	38.7	40	40	38	108
												13458	34	1	32.7	58.3	60	60	56	123	59.1	60	60	57	125

XXEA7-12 Medium Indoor Blower - With Powered Convenience Outlet (Continued)

Size (Tons)	Nominal Unit Voltage	Compressor 1			Compressor 2			OD Fan Motors (each)	Supply Blower Motor	Pwr Exh Motor	Pwr Conv Outlet	Electric Heat Field Installed Kit 2EK045*				MCA[1] (Amps)	Min Fuse[2]/ Breaker[3] Size (Amps)	Max Fuse[2]/ Breaker[3] Size (Amps)	Min Discon-nect Rating[4]		MCA[1] w/Pwr Exh (Amps)	Min Fuse[2]/ Breaker[3] Size w/ Pwr Exh (Amps)	Max Fuse[2]/ Breaker[3] Size w/ Pwr Exh (Amps)	Min Discon-nect Rating[4]/ Pwr Exh	
		RLA	LRA	MCC	RLA	LRA	MCC					Model	kW	Stages	Amps				FLA	LRA				FLA	LRA
09 (8.5)	208-3-60	14.5	98	23	14.5	98	23	2.3	7	1.1	8.6	None	-	-	-	48.5	50	60	52	270	50.7	60	60	54	275
												11725	12	1	33.3	90.1	100	100	90	303	92.3	100	100	92	308
												12525	18.6	1	51.6	113	125	125	111	322	115.2	125	125	114	327
												13225	24	1	66.6	131.8	150	150	128	337	134	150	150	131	342
												14225	31.8	2	88.3	124.5	125	125	120	329	127.3	150	150	122	334
	230-3-60	14.5	98	23	14.5	98	23	2.3	7.2	1	8.6	None	-	-	-	48.7	50	60	52	272	50.7	60	60	54	277
												11725	16	1	38.5	96.8	100	100	96	311	98.8	100	100	98	315
												12525	24.8	1	59.7	123.3	125	125	121	332	125.3	150	150	123	336
												13225	32	1	77	145	150	150	140	349	147	150	150	143	354
												14225	42.4	2	102	141.9	150	150	130	340	144.4	150	150	132	345
	460-3-60	6.3	55	10	6.3	55	10	1.3	3.6	0.5	8.6	None	-	-	-	22.6	25	25	24	149	23.6	25	25	25	151
												11746	16.5	1	19.8	47.4	50	50	47	169	48.4	50	50	48	171
												12846	27.8	1	33.4	64.4	70	70	63	182	65.4	70	70	64	184
												13346	33	1	39.7	72.2	80	80	70	189	73.2	80	80	71	191
												14246	41.7	2	50.2	69.9	70	70	63	182	71.2	80	80	64	184
	575-3-60	6	41	9	6	41	9	1.1	2.5	0.4	8.6	None	-	-	-	19.9	20	25	21	106	20.7	25	25	22	108
												11758	17	1	16.4	40.4	45	45	40	123	41.2	45	45	41	124
												13458	34	1	32.7	60.8	70	70	59	139	61.6	70	70	60	141
12 (10)	208-3-60	15.6	110	24	16	110	25	5.8	9.9	1.1	8.6	None	-	-	-	55.6	60	70	59	319	57.8	60	70	62	324
												11725	12	1	33.3	97.2	100	100	98	352	99.4	100	100	100	357
												12525	18.6	1	51.6	120.1	125	125	119	370	122.3	125	125	121	375
												13225	24	1	66.6	138.9	150	150	136	385	141.1	150	150	138	390
												14225	31.8	2	88.3	129.5	150	150	127	378	131.7	150	150	130	383
	230-3-60	15.6	110	24	16	110	25	5.2	9.4	1	8.6	None	-	-	-	54.5	60	70	58	324	56.5	60	70	60	329
												11725	16	1	38.5	102.6	110	110	102	362	104.6	110	110	105	367
												12525	24.8	1	59.7	129.1	150	150	127	384	131.1	150	150	129	388
												13225	32	1	77	150.8	175	175	147	401	152.8	175	175	149	406
												14225	42.4	2	102	144.6	150	150	136	392	147.1	150	150	139	397
	460-3-60	7.8	52	12	7.8	52	12	2.9	4.7	0.5	8.6	None	-	-	-	27.4	30	35	29	157	28.4	30	35	30	160
												11746	16.5	1	19.8	52.2	60	60	52	177	53.2	60	60	53	179
												12846	27.8	1	33.4	69.2	70	70	68	191	70.2	80	80	69	193
												13346	33	1	39.7	77	80	80	75	197	78	80	80	76	199
												14246	41.7	2	50.2	71.3	80	80	68	191	72.6	80	80	69	193
	575-3-60	5.8	38.9	9	5.7	38.9	9	2.2	4.3	0.4	8.6	None	-	-	-	21.2	25	25	23	131	22	25	25	24	133
												11758	17	1	16.4	41.7	45	45	42	147	42.5	45	45	42	149
												13458	34	1	32.7	62.1	70	70	60	164	62.9	70	70	61	165

1. Minimum Circuit Ampacity.
2. Dual Element, Time Delay Type.
3. HACR type per NEC.
4. Non-fused Disconnect, Verify on the unit nameplate that the disconnect is properly sized for the application. Units with field installed electric heat kits may exceed the factory installed disconnect amperage rating.

XXEA7-12 High Indoor Blower - Without Powered Convenience Outlet

Size (Tons)	Nominal Unit Voltage	Compressor 1			Compressor 2			OD Fan Motors (each)	Supply Blower Motor	Pwr Exh Motor	Pwr Conv Outlet	Electric Heat Field Installed Kit 2EK045*				MCA[1] (Amps)	Min Fuse[2]/ Breaker[3] Size (Amps)	Max Fuse[2]/ Breaker[3] Size (Amps)	Min Discon-nect Rating[4]		MCA[1] w/Pwr Exh (Amps)	Min Fuse[2]/ Breaker[3] Size w/ Pwr Exh (Amps)	Max Fuse[2]/ Breaker[3] Size w/ Pwr Exh (Amps)	Min Discon-nect Rating[4]/ Pwr Exh	
		RLA	LRA	MCC	RLA	LRA	MCC					Model	kW	Stages	Amps				FLA	LRA				FLA	LRA
A7 (6)	208-3-60	17.6	136	27				2.3	10.2	1.1		None	-	-	-	34.5	35	50	35	204	35.6	40	50	36	207
												10625	4.9	1	13.6	51.5	60	60	50	218	52.6	60	60	52	220
												11125	7.9	1	21.9	61.9	70	70	60	226	63	70	70	61	228
												11625	12	1	33.3	76.1	80	80	73	237	77.2	80	80	74	240
	230-3-60	17.6	136	27				2.3	10.2	1		None	-	-	-	34.5	35	50	35	210	35.5	40	50	36	212
												10625	6.5	1	15.6	54	60	60	53	226	55	60	60	54	228
												11125	10.5	1	25.3	66.1	70	70	64	235	67.1	70	70	65	238
												11625	16	1	38.5	82.6	90	90	79	249	83.6	90	90	80	251
	460-3-60	8.5	66.1	13				1.3	4.8	0.5		None	-	-	-	16.7	20	25	17	104	17.2	20	25	17	105
												10646	6	1	7.2	25.7	30	30	25	111	26.2	30	30	26	112
												11146	11.5	1	13.8	34	35	35	33	117	34.5	35	35	33	118
												11446	14	1	16.8	37.7	40	40	36	120	38.2	40	40	37	121
	575-3-60	6.3	55.3	10				1.1	3.4	0.4		None	-	-	-	12.4	15	15	12	85	12.8	15	15	13	86
08 (7.5)	208-3-60	13.8	83.1	22	13.8	83.1	22	2.3	10.2	1.1		None	-	-	-	45.9	50	50	49	239	48.1	50	60	51	244
												11725	12	1	33.3	87.5	90	90	87	272	89.7	90	90	90	277
												12525	18.6	1	51.6	110.4	125	125	108	291	112.6	125	125	111	296
												13225	24	1	66.6	129.2	150	150	125	306	131.4	150	150	128	311
												14225	31.8	2	88.3	123.1	125	125	117	298	125.9	150	150	119	303
	230-3-60	13.8	83.1	22	13.8	83.1	22	2.3	10.2	1		None	-	-	-	45.9	50	50	49	245	47.9	50	60	51	250
												11725	16	1	38.5	94	100	100	93	284	96	100	100	95	288
												12525	24.8	1	59.7	120.5	125	125	117	305	122.5	125	125	120	310
												13225	32	1	77	142.2	150	150	137	322	144.2	150	150	140	327
												14225	42.4	2	102	140.3	150	150	127	313	142.8	150	150	129	318
	460-3-60	6.2	41	10	6.2	41	10	1.3	4.8	0.5		None	-	-	-	21.4	25	25	23	122	22.4	25	25	24	125
												11746	16.5	1	19.8	46.2	50	50	46	142	47.2	50	50	47	144
												12846	27.8	1	33.4	63.2	70	70	61	156	64.2	70	70	62	158
												13346	33	1	39.7	71	80	80	68	162	72	80	80	70	164
												14246	41.7	2	50.2	68.8	70	70	61	156	70	70	70	62	158
	575-3-60	4.9	33	8	4.9	33	8	1.1	3.4	0.4		None	-	-	-	16.6	20	20	18	98	17.4	20	20	19	100
												11758	17	1	16.4	37.1	40	40	37	115	37.9	40	40	37	117
												13458	34	1	32.7	57.5	60	60	55	131	58.3	60	60	56	133
09 (8.5)	208-3-60	14.5	98	23	14.5	98	23	2.3	10.2	1.1		None	-	-	-	47.4	50	60	50	269	49.6	50	60	53	274
												11725	12	1	33.3	89	90	90	89	302	91.2	100	100	91	307
												12525	18.6	1	51.6	111.9	125	125	110	320	114.1	125	125	112	325
												13225	24	1	66.6	130.7	150	150	127	335	132.9	150	150	129	340
												14225	31.8	2	88.3	123.1	125	125	118	328	125.9	150	150	121	333
	230-3-60	14.5	98	23	14.5	98	23	2.3	10.2	1		None	-	-	-	47.4	50	60	50	275	49.4	50	60	53	280
												11725	16	1	38.5	95.5	100	100	95	314	97.5	100	100	97	318
												12525	24.8	1	59.7	122	125	125	119	335	124	125	125	121	339
												13225	32	1	77	143.7	150	150	139	352	145.7	150	150	141	357
												14225	42.4	2	102	140.3	150	150	129	343	142.8	150	150	131	348
	460-3-60	6.3	55	10	6.3	55	10	1.3	4.8	0.5		None	-	-	-	21.6	25	25	23	150	22.6	25	25	24	153
												11746	16.5	1	19.8	46.4	50	50	46	170	47.4	50	50	47	172
												12846	27.8	1	33.4	63.4	70	70	61	184	64.4	70	70	63	186
												13346	33	1	39.7	71.2	80	80	69	190	72.2	80	80	70	192
												14246	41.7	2	50.2	68.8	70	70	61	184	70	70	70	63	186
	575-3-60	6	41	9	6	41	9	1.1	3.4	0.4		None	-	-	-	19.1	20	25	20	114	19.9	20	25	21	116
												11758	17	1	16.4	39.6	40	40	39	131	40.4	45	45	40	133
												13458	34	1	32.7	60	60	60	58	147	60.8	70	70	59	149

XXEA7-12 High Indoor Blower - Without Powered Convenience Outlet (Continued)

Size (Tons)	Nominal Unit Voltage	Compressor 1			Compressor 2			OD Fan Motors (each)	Supply Blower Motor	Pwr Exh Motor	Pwr Conv Outlet	Electric Heat Field Installed Kit 2EK045*				MCA[1] (Amps)	Min Fuse[2]/ Breaker[3] Size (Amps)	Max Fuse[2]/ Breaker[3] Size (Amps)	Min Discon-nect Rating[4]		MCA[1] w/Pwr Exh (Amps)	Min Fuse[2]/ Breaker[3] Size w/ Pwr Exh (Amps)	Max Fuse[2]/ Breaker[3] Size w/ Pwr Exh (Amps)	Min Discon-nect Rating[4]/ Pwr Exh	
		RLA	LRA	MCC	RLA	LRA	MCC					Model	kW	Stages	Amps				FLA	LRA				FLA	LRA
12 (10)	208-3-60	15.6	110	24	16	110	25	5.8	14.9	1.1		None	-	-	-	56.3	60	70	60	323	58.5	60	70	63	328
												11725	12	1	33.3	97.9	100	100	98	357	100.1	110	110	101	362
												12525	18.6	1	51.6	120.8	125	125	119	375	123	125	125	122	380
												13225	24	1	66.6	139.6	150	150	137	390	141.8	150	150	139	395
												14225	31.8	2	88.3	130.2	150	150	128	382	132.4	150	150	131	387
	230-3-60	15.6	110	24	16	110	25	5.2	15	1		None	-	-	-	55.8	60	70	60	322	57.8	60	70	62	327
												11725	16	1	38.5	103.9	110	110	104	361	105.9	110	110	106	365
												12525	24.8	1	59.7	130.4	150	150	128	382	132.4	150	150	131	386
												13225	32	1	77	152.1	175	175	148	399	154.1	175	175	150	404
												14225	42.4	2	102	146.3	150	150	138	390	148.8	150	150	140	395
	460-3-60	7.8	52	12	7.8	52	12	2.9	7.5	0.5		None	-	-	-	28	30	35	30	159	29	30	35	31	161
												11746	16.5	1	19.8	52.8	60	60	53	179	53.8	60	60	54	181
												12846	27.8	1	33.4	69.8	70	70	68	192	70.8	80	80	69	195
												13346	33	1	39.7	77.6	80	80	76	199	78.6	80	80	77	201
												14246	41.7	2	50.2	72.1	80	80	68	192	73.4	80	80	69	195
	575-3-60	5.8	38.9	9	5.7	38.9	9	2.2	5.6	0.4		None	-	-	-	20.8	25	25	22	124	21.6	25	25	23	126
												11758	17	1	16.4	41.3	45	45	41	141	42.1	45	45	42	143
												13458	34	1	32.7	61.7	70	70	60	157	62.5	70	70	61	159
												With VFD													
A7 (6)	208-3-60	17.6	136	27				2.3	9.9	1.1		None	-	-	-	34.2	35	50	34	213	35.3	40	50	36	216
												10625	4.9	1	13.6	51.2	60	60	50	227	52.3	60	60	51	229
												11125	7.9	1	21.9	61.6	70	70	59	235	62.7	70	70	61	238
												11625	12	1	33.3	75.8	80	80	73	247	76.9	80	80	74	249
	230-3-60	17.6	136	27				2.3	9.4	1		None	-	-	-	33.7	35	50	34	222	34.7	35	50	35	224
												10625	6.5	1	15.6	53.2	60	60	52	237	54.2	60	60	53	240
												11125	10.5	1	25.3	65.3	70	70	63	247	66.3	70	70	64	249
												11625	16	1	38.5	81.8	90	90	78	260	82.8	90	90	79	262
	460-3-60	8.5	66.1	13				1.3	4.7	0.5		None	-	-	-	16.6	20	25	17	109	17.1	20	25	17	110
												10646	6	1	7.2	25.6	30	30	25	117	26.1	30	30	26	118
												11146	11.5	1	13.8	33.9	35	35	33	123	34.4	35	35	33	124
												11446	14	1	16.8	37.6	40	40	36	126	38.1	40	40	37	127
	575-3-60	6.3	55.3	10				1.1	4.3	0.4		None	-	-	-	13.3	15	15	13	98	13.7	15	15	14	99
08 (7.5)	208-3-60	13.8	83.1	22	13.8	83.1	22	2.3	9.9	1.1		None	-	-	-	45.6	50	50	48	248	47.8	50	60	51	253
												11725	12	1	33.3	87.2	90	90	87	282	89.4	90	90	89	287
												12525	18.6	1	51.6	110.1	125	125	108	300	112.3	125	125	110	305
												13225	24	1	66.6	128.9	150	150	125	315	131.1	150	150	128	320
												14225	31.8	2	88.3	122.8	125	125	116	307	125.5	150	150	119	312
	230-3-60	13.8	83.1	22	13.8	83.1	22	2.3	9.4	1		None	-	-	-	45.1	50	50	48	257	47.1	50	60	50	261
												11725	16	1	38.5	93.2	100	100	92	295	95.2	100	100	94	300
												12525	24.8	1	59.7	119.7	125	125	116	317	121.7	125	125	119	321
												13225	32	1	77	141.4	150	150	136	334	143.4	150	150	139	338
												14225	42.4	2	102	139.3	150	150	126	325	141.8	150	150	128	330
	460-3-60	6.2	41	10	6.2	41	10	1.3	4.7	0.5		None	-	-	-	21.3	25	25	23	128	22.3	25	25	24	130
												11746	16.5	1	19.8	46.1	50	50	45	148	47.1	50	50	47	150
												12846	27.8	1	33.4	63.1	70	70	61	162	64.1	70	70	62	164
												13346	33	1	39.7	70.9	80	80	68	168	71.9	80	80	69	170
												14246	41.7	2	50.2	68.6	70	70	61	162	69.9	70	70	62	164
	575-3-60	4.9	33	8	4.9	33	8	1.1	4.3	0.4		None	-	-	-	17.5	20	20	19	111	18.3	20	20	20	113
												11758	17	1	16.4	38	40	40	38	127	38.8	40	40	39	129
												13458	34	1	32.7	58.4	60	60	56	143	59.2	60	60	57	145

XXEA7-12 High Indoor Blower - Without Powered Convenience Outlet (Continued)

Size (Tons)	Nominal Unit Voltage	Compressor 1			Compressor 2			OD Fan Motors (each)	Supply Blower Motor	Pwr Exh Motor	Pwr Conv Outlet	Electric Heat Field Installed Kit 2EK045*				MCA[1] (Amps)	Min Fuse[2]/ Breaker[3] Size (Amps)	Max Fuse[2]/ Breaker[3] Size (Amps)	Min Discon-nect Rating[4]		MCA[1] w/Pwr Exh (Amps)	Min Fuse[2]/ Breaker[3] Size w/ Pwr Exh (Amps)	Max Fuse[2]/ Breaker[3] Size w/ Pwr Exh (Amps)	Min Discon-nect Rating[4]/ Pwr Exh	
		RLA	LRA	MCC	RLA	LRA	MCC					Model	kW	Stages	Amps				FLA	LRA				FLA	LRA
09 (8.5)	208-3-60	14.5	98	23	14.5	98	23	2.3	9.9	1.1		None	-	-	-	47.1	50	60	50	278	49.3	50	60	53	283
												11725	12	1	33.3	88.7	90	90	88	311	90.9	100	100	91	316
												12525	18.6	1	51.6	111.6	125	125	109	330	113.8	125	125	112	335
												13225	24	1	66.6	130.4	150	150	127	345	132.6	150	150	129	350
												14225	31.8	2	88.3	122.8	125	125	118	337	125.5	150	150	121	342
	230-3-60	14.5	98	23	14.5	98	23	2.3	9.4	1		None	-	-	-	46.6	50	60	49	287	48.6	50	60	52	291
												11725	16	1	38.5	94.7	100	100	94	325	96.7	100	100	96	330
												12525	24.8	1	59.7	121.2	125	125	118	346	123.2	125	125	120	351
												13225	32	1	77	142.9	150	150	138	364	144.9	150	150	140	368
												14225	42.4	2	102	139.3	150	150	128	355	141.8	150	150	130	359
	460-3-60	6.3	55	10	6.3	55	10	1.3	4.7	0.5		None	-	-	-	21.5	25	25	23	156	22.5	25	25	24	158
												11746	16.5	1	19.8	46.3	50	50	46	176	47.3	50	50	47	178
												12846	27.8	1	33.4	63.3	70	70	61	190	64.3	70	70	62	192
												13346	33	1	39.7	71.1	80	80	69	196	72.1	80	80	70	198
												14246	41.7	2	50.2	68.6	70	70	61	190	69.9	70	70	62	192
	575-3-60	6	41	9	6	41	9	1.1	4.3	0.4		None	-	-	-	20	25	25	21	127	20.8	25	25	22	129
												11758	17	1	16.4	40.5	45	45	40	143	41.3	45	45	41	145
												13458	34	1	32.7	60.9	70	70	59	159	61.7	70	70	60	161
12 (10)	208-3-60	15.6	110	24	16	110	25	5.8	13.5	1.1		None	-	-	-	54.9	60	70	59	345	57.1	60	70	61	350
												11725	12	1	33.3	96.5	100	100	97	378	98.7	100	100	99	383
												12525	18.6	1	51.6	119.4	125	125	118	396	121.6	125	125	120	401
												13225	24	1	66.6	138.2	150	150	135	411	140.4	150	150	138	416
												14225	31.8	2	88.3	128.8	150	150	127	404	131	150	150	129	409
	230-3-60	15.6	110	24	16	110	25	5.2	13.4	1		None	-	-	-	54.2	60	70	58	341	56.2	60	70	60	346
												11725	16	1	38.5	102.3	110	110	102	380	104.3	110	110	104	384
												12525	24.8	1	59.7	128.8	150	150	126	401	130.8	150	150	129	405
												13225	32	1	77	150.5	175	175	146	418	152.5	175	175	149	423
												14225	42.4	2	102	144.3	150	150	136	409	146.8	150	150	138	414
	460-3-60	7.8	52	12	7.8	52	12	2.9	6.7	0.5		None	-	-	-	27.2	30	30	29	166	28.2	30	30	30	168
												11746	16.5	1	19.8	52	60	60	52	186	53	60	60	53	188
												12846	27.8	1	33.4	69	70	70	67	199	70	70	70	69	202
												13346	33	1	39.7	76.8	80	80	75	206	77.8	80	80	76	208
												14246	41.7	2	50.2	71.1	80	80	67	199	72.4	80	80	69	202
	575-3-60	5.8	38.9	9	5.7	38.9	9	2.2	5.4	0.4		None	-	-	-	20.6	25	25	22	129	21.4	25	25	23	131
												11758	17	1	16.4	41.1	45	45	41	146	41.9	45	45	42	147
												13458	34	1	32.7	61.5	70	70	60	162	62.3	70	70	60	164

1. Minimum Circuit Ampacity.
2. Dual Element, Time Delay Type.
3. HACR type per NEC.
4. Non-fused Disconnect, Verify on the unit nameplate that the disconnect is properly sized for the application. Units with field installed electric heat kits may exceed the factory installed disconnect amperage rating.

XXEA7-12 High Indoor Blower - With Powered Convenience Outlet

Size (Tons)	Nominal Unit Voltage	Compressor 1			Compressor 2			OD Fan Motors (each)	Supply Blower Motor	Pwr Exh Motor	Pwr Conv Outlet	Electric Heat Field Installed Kit 2EK045*				MCA[1] (Amps)	Min Fuse[2]/ Breaker[3] Size (Amps)	Max Fuse[2]/ Breaker[3] Size (Amps)	Min Discon-nect Rating[4]		MCA[1] w/Pwr Exh (Amps)	Min Fuse[2]/ Breaker[3] Size w/ Pwr Exh (Amps)	Max Fuse[2]/ Breaker[3] Size w/ Pwr Exh (Amps)	Min Discon-nect Rating[4]/ Pwr Exh	
		RLA	LRA	MCC	RLA	LRA	MCC					Model	kW	Stages	Amps				FLA	LRA				FLA	LRA
A7 (6)	208-3-60	17.6	136	27				2.3	10.2	1.1	8.6	None	-	-	-	38.8	40	50	40	208	39.9	40	50	41	211
												10625	4.9	1	13.6	55.8	60	70	55	222	56.9	60	70	56	224
												11125	7.9	1	21.9	66.2	70	70	65	230	67.3	70	70	66	233
												11625	12	1	33.3	80.4	90	90	78	242	81.5	90	90	79	244
	230-3-60	17.6	136	27				2.3	10.2	1	8.6	None	-	-	-	38.8	40	50	40	214	39.8	40	50	41	217
												10625	6.5	1	15.6	58.3	60	70	58	230	59.3	60	70	59	232
												11125	10.5	1	25.3	70.4	80	80	69	240	71.4	80	80	70	242
												11625	16	1	38.5	86.9	90	90	84	253	87.9	90	90	85	255
	460-3-60	8.5	66.1	13				1.3	4.8	0.5	8.6	None	-	-	-	18.9	20	25	19	106	19.4	20	25	20	107
												10646	6	1	7.2	27.9	30	30	28	113	28.4	30	30	28	114
												11146	11.5	1	13.8	36.2	40	40	35	119	36.7	40	40	36	121
												11446	14	1	16.8	39.9	40	40	39	122	40.4	45	45	39	124
	575-3-60	6.3	55.3	10				1.1	3.4	0.4	8.6	None	-	-	-	14.1	15	20	14	87	14.5	15	20	15	88
08 (7.5)	208-3-60	13.8	83.1	22	13.8	83.1	22	2.3	10.2	1.1	8.6	None	-	-	-	50.2	60	60	54	243	52.4	60	60	56	248
												11725	12	1	33.3	91.8	100	100	92	277	94	100	100	95	282
												12525	18.6	1	51.6	114.7	125	125	113	295	116.9	125	125	116	300
												13225	24	1	66.6	133.5	150	150	130	310	135.7	150	150	133	315
												14225	31.8	2	88.3	128.5	150	150	122	302	131.3	150	150	124	307
	230-3-60	13.8	83.1	22	13.8	83.1	22	2.3	10.2	1	8.6	None	-	-	-	50.2	60	60	54	250	52.2	60	60	56	254
												11725	16	1	38.5	98.3	100	100	98	288	100.3	110	110	100	293
												12525	24.8	1	59.7	124.8	125	125	122	309	126.8	150	150	125	314
												13225	32	1	77	146.5	150	150	142	327	148.5	150	150	145	331
												14225	42.4	2	102	145.6	150	150	132	318	148.1	150	150	134	322
	460-3-60	6.2	41	10	6.2	41	10	1.3	4.8	0.5	8.6	None	-	-	-	23.6	25	25	25	124	24.6	25	25	26	127
												11746	16.5	1	19.8	48.4	50	50	48	144	49.4	50	50	49	146
												12846	27.8	1	33.4	65.4	70	70	64	158	66.4	70	70	65	160
												13346	33	1	39.7	73.2	80	80	71	164	74.2	80	80	72	166
												14246	41.7	2	50.2	71.4	80	80	64	158	72.7	80	80	65	160
	575-3-60	4.9	33	8	4.9	33	8	1.1	3.4	0.4	8.6	None	-	-	-	18.3	20	20	20	100	19.1	20	20	21	102
												11758	17	1	16.4	38.8	40	40	39	116	39.6	40	40	39	118
												13458	34	1	32.7	59.2	60	60	57	133	60	60	60	58	135
09 (8.5)	208-3-60	14.5	98	23	14.5	98	23	2.3	10.2	1.1	8.6	None	-	-	-	51.7	60	60	55	273	53.9	60	60	58	278
												11725	12	1	33.3	93.3	100	100	94	306	95.5	100	100	96	311
												12525	18.6	1	51.6	116.2	125	125	115	325	118.4	125	125	117	330
												13225	24	1	66.6	135	150	150	132	340	137.2	150	150	134	345
												14225	31.8	2	88.3	128.5	150	150	123	332	131.3	150	150	126	337
	230-3-60	14.5	98	23	14.5	98	23	2.3	10.2	1	8.6	None	-	-	-	51.7	60	60	55	279	53.7	60	60	58	284
												11725	16	1	38.5	99.8	100	100	100	318	101.8	110	110	102	322
												12525	24.8	1	59.7	126.3	150	150	124	339	128.3	150	150	126	344
												13225	32	1	77	148	150	150	144	356	150	150	150	146	361
												14225	42.4	2	102	145.6	150	150	134	347	148.1	150	150	136	352
	460-3-60	6.3	55	10	6.3	55	10	1.3	4.8	0.5	8.6	None	-	-	-	23.8	25	30	26	152	24.8	25	30	27	155
												11746	16.5	1	19.8	48.6	50	50	48	172	49.6	50	50	49	174
												12846	27.8	1	33.4	65.6	70	70	64	186	66.6	70	70	65	188
												13346	33	1	39.7	73.4	80	80	71	192	74.4	80	80	72	194
												14246	41.7	2	50.2	71.4	80	80	64	186	72.7	80	80	65	188
	575-3-60	6	41	9	6	41	9	1.1	3.4	0.4	8.6	None	-	-	-	20.8	25	25	22	116	21.6	25	25	23	118
												11758	17	1	16.4	41.3	45	45	41	132	42.1	45	45	42	134
												13458	34	1	32.7	61.7	70	70	60	149	62.5	70	70	61	151

XXEA7-12 High Indoor Blower - With Powered Convenience Outlet (Continued)

Size (Tons)	Nominal Unit Voltage	Compressor 1			Compressor 2			OD Fan Motors (each)	Supply Blower Motor	Pwr Exh Motor	Pwr Conv Outlet	Electric Heat Field Installed Kit 2EK045*				MCA[1] (Amps)	Min Fuse[2]/ Breaker[3] Size (Amps)	Max Fuse[2]/ Breaker[3] Size (Amps)	Min Discon-nect Rating[4]		MCA[1] w/Pwr Exh (Amps)	Min Fuse[2]/ Breaker[3] Size w/ Pwr Exh (Amps)	Max Fuse[2]/ Breaker[3] Size w/ Pwr Exh (Amps)	Min Discon-nect Rating[4]/ Pwr Exh	
		RLA	LRA	MCC	RLA	LRA	MCC					Model	kW	Stages	Amps				FLA	LRA				FLA	LRA
12 (10)	208-3-60	15.6	110	24	16	110	25	5.8	14.9	1.1	8.6	None	-	-	-	60.6	70	70	65	328	62.8	70	70	68	333
												11725	12	1	33.3	102.2	110	110	103	361	104.4	110	110	106	366
												12525	18.6	1	51.6	125.1	150	150	124	379	127.3	150	150	127	384
												13225	24	1	66.6	143.9	150	150	142	394	146.1	150	150	144	399
												14225	31.8	2	88.3	134.5	150	150	133	387	137.1	150	150	136	392
	230-3-60	15.6	110	24	16	110	25	5.2	15	1	8.6	None	-	-	-	60.1	70	70	65	326	62.1	70	70	67	331
												11725	16	1	38.5	108.2	110	110	109	365	110.2	125	125	111	369
												12525	24.8	1	59.7	134.7	150	150	133	386	136.7	150	150	135	391
												13225	32	1	77	156.4	175	175	153	403	158.4	175	175	155	408
												14225	42.4	2	102	151.6	175	175	143	394	154.1	175	175	145	399
	460-3-60	7.8	52	12	7.8	52	12	2.9	7.5	0.5	8.6	None	-	-	-	30.2	35	35	32	161	31.2	35	35	34	163
												11746	16.5	1	19.8	55	60	60	55	181	56	60	60	56	183
												12846	27.8	1	33.4	72	80	80	71	195	73	80	80	72	197
												13346	33	1	39.7	79.8	80	80	78	201	80.8	90	90	79	203
												14246	41.7	2	50.2	74.8	80	80	71	195	76.1	80	80	72	197
	575-3-60	5.8	38.9	9	5.7	38.9	9	2.2	5.6	0.4	8.6	None	-	-	-	22.5	25	25	24	126	23.3	25	25	25	128
												11758	17	1	16.4	43	45	45	43	142	43.8	45	45	44	144
												13458	34	1	32.7	63.4	70	70	62	159	64.2	70	70	63	161
												With VFD													
A7 (6)	208-3-60	17.6	136	27				2.3	9.9	1.1	8.6	None	-	-	-	38.5	40	50	39	218	39.6	40	50	40	220
												10625	4.9	1	13.6	55.5	60	60	55	231	56.6	60	70	56	234
												11125	7.9	1	21.9	65.9	70	70	64	240	67	70	70	66	242
												11625	12	1	33.3	80.1	90	90	78	251	81.2	90	90	79	253
	230-3-60	17.6	136	27				2.3	9.4	1	8.6	None	-	-	-	38	40	50	39	226	39	40	50	40	228
												10625	6.5	1	15.6	57.5	60	70	57	242	58.5	60	70	58	244
												11125	10.5	1	25.3	69.6	70	80	68	251	70.6	80	80	69	254
												11625	16	1	38.5	86.1	90	90	83	264	87.1	90	90	84	267
	460-3-60	8.5	66.1	13				1.3	4.7	0.5	8.6	None	-	-	-	18.8	20	25	19	111	19.3	20	25	20	113
												10646	6	1	7.2	27.8	30	30	27	119	28.3	30	30	28	120
												11146	11.5	1	13.8	36.1	40	40	35	125	36.6	40	40	36	126
												11446	14	1	16.8	39.8	40	40	39	128	40.3	45	45	39	129
	575-3-60	6.3	55.3	10				1.1	4.3	0.4	8.6	None	-	-	-	15	20	20	15	99	15.4	20	20	16	100
08 (7.5)	208-3-60	13.8	83.1	22	13.8	83.1	22	2.3	9.9	1.1	8.6	None	-	-	-	49.9	50	60	53	253	52.1	60	60	56	258
												11725	12	1	33.3	91.5	100	100	92	286	93.7	100	100	94	291
												12525	18.6	1	51.6	114.4	125	125	113	304	116.6	125	125	115	309
												13225	24	1	66.6	133.2	150	150	130	319	135.4	150	150	132	324
												14225	31.8	2	88.3	128.1	150	150	121	312	130.9	150	150	124	317
	230-3-60	13.8	83.1	22	13.8	83.1	22	2.3	9.4	1	8.6	None	-	-	-	49.4	50	60	53	261	51.4	60	60	55	266
												11725	16	1	38.5	97.5	100	100	97	300	99.5	100	100	99	304
												12525	24.8	1	59.7	124	125	125	121	321	126	150	150	124	325
												13225	32	1	77	145.7	150	150	141	338	147.7	150	150	144	343
												14225	42.4	2	102	144.6	150	150	131	329	147.1	150	150	133	334
	460-3-60	6.2	41	10	6.2	41	10	1.3	4.7	0.5	8.6	None	-	-	-	23.5	25	25	25	130	24.5	25	25	26	132
												11746	16.5	1	19.8	48.3	50	50	48	150	49.3	50	50	49	152
												12846	27.8	1	33.4	65.3	70	70	64	164	66.3	70	70	65	166
												13346	33	1	39.7	73.1	80	80	71	170	74.1	80	80	72	172
												14246	41.7	2	50.2	71.3	80	80	64	164	72.6	80	80	65	166
	575-3-60	4.9	33	8	4.9	33	8	1.1	4.3	0.4	8.6	None	-	-	-	19.2	20	20	21	112	20	20	20	22	114
												11758	17	1	16.4	39.7	40	40	40	129	40.5	45	45	40	131
												13458	34	1	32.7	60.1	70	70	58	145	60.9	70	70	59	147

XXEA7-12 High Indoor Blower - With Powered Convenience Outlet (Continued)

Size (Tons)	Nominal Unit Voltage	Compressor 1			Compressor 2			OD Fan Motors (each)	Supply Blower Motor	Pwr Exh Motor	Pwr Conv Outlet	Electric Heat Field Installed Kit 2EK045*				MCA[1] (Amps)	Min Fuse[2]/ Breaker[3] Size (Amps)	Max Fuse[2]/ Breaker[3] Size (Amps)	Min Discon-nect Rating[4]		MCA[1] w/Pwr Exh (Amps)	Min Fuse[2]/ Breaker[3] Size w/ Pwr Exh (Amps)	Max Fuse[2]/ Breaker[3] Size w/ Pwr Exh (Amps)	Min Discon-nect Rating[4]/ Pwr Exh	
		RLA	LRA	MCC	RLA	LRA	MCC					Model	kW	Stages	Amps				FLA	LRA				FLA	LRA
09 (8.5)	208-3-60	14.5	98	23	14.5	98	23	2.3	9.9	1.1	8.6	None	-	-	-	51.4	60	60	55	282	53.6	60	60	58	287
												11725	12	1	33.3	93	100	100	93	316	95.2	100	100	96	321
												12525	18.6	1	51.6	115.9	125	125	114	334	118.1	125	125	117	339
												13225	24	1	66.6	134.7	150	150	132	349	136.9	150	150	134	354
												14225	31.8	2	88.3	128.1	150	150	123	342	130.9	150	150	125	347
	230-3-60	14.5	98	23	14.5	98	23	2.3	9.4	1	8.6	None	-	-	-	50.9	60	60	54	291	52.9	60	60	57	296
												11725	16	1	38.5	99	100	100	99	329	101	110	110	101	334
												12525	24.8	1	59.7	125.5	150	150	123	351	127.5	150	150	125	355
												13225	32	1	77	147.2	150	150	143	368	149.2	150	150	145	373
												14225	42.4	2	102	144.6	150	150	133	359	147.1	150	150	135	364
	460-3-60	6.3	55	10	6.3	55	10	1.3	4.7	0.5	8.6	None	-	-	-	23.7	25	25	25	158	24.7	25	25	27	160
												11746	16.5	1	19.8	48.5	50	50	48	178	49.5	50	50	49	180
												12846	27.8	1	33.4	65.5	70	70	64	192	66.5	70	70	65	194
												13346	33	1	39.7	73.3	80	80	71	198	74.3	80	80	72	200
												14246	41.7	2	50.2	71.3	80	80	64	192	72.6	80	80	65	194
	575-3-60	6	41	9	6	41	9	1.1	4.3	0.4	8.6	None	-	-	-	21.7	25	25	23	128	22.5	25	25	24	130
												11758	17	1	16.4	42.2	45	45	42	145	43	45	45	43	147
												13458	34	1	32.7	62.6	70	70	61	161	63.4	70	70	62	163
12 (10)	208-3-60	15.6	110	24	16	110	25	5.8	13.5	1.1	8.6	None	-	-	-	59.2	60	70	63	349	61.4	70	70	66	354
												11725	12	1	33.3	100.8	110	110	102	382	103	110	110	104	387
												12525	18.6	1	51.6	123.7	125	125	123	401	125.9	150	150	125	406
												13225	24	1	66.6	142.5	150	150	140	416	144.7	150	150	143	421
												14225	31.8	2	88.3	133.1	150	150	131	408	135.4	150	150	134	413
	230-3-60	15.6	110	24	16	110	25	5.2	13.4	1	8.6	None	-	-	-	58.5	60	70	63	345	60.5	70	70	65	350
												11725	16	1	38.5	106.6	110	110	107	384	108.6	110	110	109	388
												12525	24.8	1	59.7	133.1	150	150	131	405	135.1	150	150	134	410
												13225	32	1	77	154.8	175	175	151	422	156.8	175	175	154	427
												14225	42.4	2	102	149.6	150	150	141	413	152.1	175	175	143	418
	460-3-60	7.8	52	12	7.8	52	12	2.9	6.7	0.5	8.6	None	-	-	-	29.4	30	35	32	168	30.4	35	35	33	170
												11746	16.5	1	19.8	54.2	60	60	54	188	55.2	60	60	55	190
												12846	27.8	1	33.4	71.2	80	80	70	202	72.2	80	80	71	204
												13346	33	1	39.7	79	80	80	77	208	80	80	80	78	210
												14246	41.7	2	50.2	73.8	80	80	70	202	75.1	80	80	71	204
	575-3-60	5.8	38.9	9	5.7	38.9	9	2.2	5.4	0.4	8.6	None	-	-	-	22.3	25	25	24	131	23.1	25	25	25	133
												11758	17	1	16.4	42.8	45	45	43	147	43.6	45	45	44	149
												13458	34	1	32.7	63.2	70	70	62	164	64	70	70	62	165

1. Minimum Circuit Ampacity.
2. Dual Element, Time Delay Type.
3. HACR type per NEC.
4. Non-fused Disconnect, Verify on the unit nameplate that the disconnect is properly sized for the application. Units with field installed electric heat kits may exceed the factory installed disconnect amperage rating.

XQE04-06 Standard Indoor Blower - Without Powered Convenience Outlet

Size (Tons)	Nominal Unit Voltage	Compressor 1			Compressor 2			OD Fan Motors (each)	Supply Blower Motor	Pwr Exh Motor	Pwr Conv Outlet	Electric Heat Field Installed Kit 2EK045*				MCA[1] (Amps)	Min Fuse[2]/ Breaker[3] Size (Amps)	Max Fuse[2]/ Breaker[3] Size (Amps)	Min Disconnect Rating[4]		MCA[1] w/Pwr Exh (Amps)	Min Fuse[2]/ Breaker[3] Size w/ Pwr Exh (Amps)	Max Fuse[2]/ Breaker[3] Size w/ Pwr Exh (Amps)	Min Discon-nect Rating[4]/ Pwr Exh	
		RLA	LRA	MCC	RLA	LRA	MCC					Model	kW	Stages	Amps				FLA	LRA				FLA	LRA
04 (3)	208-1-60	15.4	83.9	24				2.3	6.6	1.5		None	-	-	-	28.2	30	40	28	91	29.7	30	45	30	94
												10625	4.9	1	23.6	57.7	60	60	55	114	59.2	60	60	57	118
												11125	7.9	1	38	75.7	80	80	72	129	77.2	80	80	73	132
	230-1-60	15.4	83.9	24				2.3	6	1.3		None	-	-	-	27.6	30	40	27	91	28.9	30	40	29	94
												10625	6.5	1	27.1	61.5	70	70	58	118	62.8	70	70	60	121
												11125	10.5	1	43.8	82.4	90	90	78	135	83.7	90	90	79	138
	208-3-60	10.4	73	16				2.3	6.6	1.1		None	-	-	-	21.9	25	30	22	80	23	25	30	23	82
												10625	4.9	1	13.6	38.9	40	45	38	93	40	40	45	39	96
												11125	7.9	1	21.9	49.3	50	50	47	102	50.4	60	60	49	104
												11625	12	1	33.3	63.5	70	70	60	113	64.6	70	70	62	116
	230-3-60	10.4	73	16				2.3	6	1		None	-	-	-	21.3	25	30	22	80	22.3	25	30	23	82
												10625	6.5	1	15.6	40.8	45	45	39	96	41.8	45	45	41	98
												11125	10.5	1	25.3	52.9	60	60	51	105	53.9	60	60	52	108
												11625	16	1	38.5	69.4	70	70	66	119	70.4	80	80	67	121
	460-3-60	5.8	38	9				1.3	3.2	0.5		None	-	-	-	11.8	15	15	12	43	12.3	15	15	12	44
												10646	6	1	7.2	20.8	25	25	20	50	21.3	25	25	21	51
												11146	11.5	1	13.8	29.1	30	30	28	57	29.6	30	30	28	58
												11446	14	1	16.8	32.8	35	35	31	60	33.3	35	35	32	61
	575-3-60	3.8	36.5	6				1.1	6	0.4		None	-	-	-	8.3	15	15	8	40	8.7	15	15	9	41
												11058	9.2	1	8.9	19.4	20	20	19	49	19.8	20	20	19	49
												11458	13.8	1	13.3	24.9	25	25	24	53	25.3	30	30	24	54
05 (4)	208-1-60	19.6	130	31				2.3	8.4	1.5		None	-	-	-	35.2	40	50	35	137	36.7	40	50	37	140
												10625	4.9	1	23.6	64.7	70	70	62	160	66.2	70	70	64	164
												11125	7.9	1	38	82.7	90	90	79	175	84.2	90	90	80	178
	230-1-60	19.6	130	31				2.3	7.6	1.3		None	-	-	-	34.4	35	50	34	137	35.7	40	50	35	140
												10625	6.5	1	27.1	68.3	70	80	65	164	69.6	70	80	67	167
												11125	10.5	1	43.8	89.2	90	90	84	181	90.5	100	100	86	184
	208-3-60	13.7	83.1	21				2.3	8.4	1.1		None	-	-	-	27.8	30	40	28	90	28.9	30	40	29	92
												10625	4.9	1	13.6	44.8	45	50	44	104	45.9	50	50	45	106
												11125	7.9	1	21.9	55.2	60	60	53	112	56.3	60	60	55	114
												11625	12	1	33.3	69.4	70	70	66	123	70.5	80	80	68	126
	230-3-60	13.7	83.1	21				2.3	7.6	1		None	-	-	-	27	30	40	27	90	28	30	40	28	92
												10625	6.5	1	15.6	46.5	50	50	45	106	47.5	50	50	46	108
												11125	10.5	1	25.3	58.6	60	60	56	115	59.6	60	60	57	118
												11625	16	1	38.5	75.1	80	80	71	129	76.1	80	80	73	131
	460-3-60	6.2	41	10				1.3	4	0.5		None	-	-	-	13.1	15	15	13	46	13.6	15	15	14	47
												10646	6	1	7.2	22.1	25	25	22	53	22.6	25	25	22	54
												11146	11.5	1	13.8	30.4	35	35	29	60	30.9	35	35	30	61
												11446	14	1	16.8	34.1	35	35	33	63	34.6	35	35	33	64
	575-3-60	4.8	33	8				1.1	7.6	0.4		None	-	-	-	10.1	15	15	10	36	10.5	15	15	11	37
												11058	9.2	1	8.9	21.2	25	25	20	45	21.6	25	25	21	46
												11458	13.8	1	13.3	26.7	30	30	26	49	27.1	30	30	26	50

XQE04-06 Standard Indoor Blower - Without Powered Convenience Outlet (Continued)

Size (Tons)	Nominal Unit Voltage	Compressor 1			Compressor 2			OD Fan Motors (each)	Supply Blower Motor	Pwr Exh Motor	Pwr Conv Outlet	Electric Heat Field Installed Kit 2EK045*				MCA[1] (Amps)	Min Fuse[2]/ Breaker[3] Size (Amps)	Max Fuse[2]/ Breaker[3] Size (Amps)	Min Disconnect Rating[4]		MCA[1] w/Pwr Exh (Amps)	Min Fuse[2]/ Breaker[3] Size w/ Pwr Exh (Amps)	Max Fuse[2]/ Breaker[3] Size w/ Pwr Exh (Amps)	Min Discon-nect Rating[4]/ Pwr Exh	
		RLA	LRA	MCC	RLA	LRA	MCC					Model	kW	Stages	Amps				FLA	LRA				FLA	LRA
06 (5)	208-1-60	24.4	144.2	38				2.3	8.4	1.5		None	-	-	-	41.2	45	60	40	151	42.7	45	60	42	154
												10625	4.9	1	23.6	70.7	80	80	68	175	72.2	80	90	69	178
												11125	7.9	1	38	88.7	90	100	84	189	90.2	100	100	86	192
	230-1-60	24.4	144.2	38				2.3	7.6	1.3		None	-	-	-	40.4	45	60	39	151	41.7	45	60	41	154
												10625	6.5	1	27.1	74.3	80	90	71	178	75.6	80	90	72	181
												11125	10.5	1	43.8	95.2	100	100	90	195	96.5	100	100	91	198
	208-3-60	16	110	25				2.3	8.4	1.1		None	-	-	-	30.7	35	45	31	117	31.8	35	45	32	119
												10625	4.9	1	13.6	47.7	50	60	46	130	48.8	50	60	48	133
												11125	7.9	1	21.9	58.1	60	60	56	139	59.2	60	60	57	141
												11625	12	1	33.3	72.3	80	80	69	150	73.4	80	80	70	153
	230-3-60	16	110	25				2.3	7.6	1		None	-	-	-	29.9	30	45	30	117	30.9	35	45	31	119
												10625	6.5	1	15.6	49.4	50	60	48	133	50.4	60	60	49	135
												11125	10.5	1	25.3	61.5	70	70	59	142	62.5	70	70	60	145
												11625	16	1	38.5	78	80	80	74	156	79	80	80	75	158
	460-3-60	7.8	52	12				1.3	4	0.5		None	-	-	-	15.1	20	20	15	57	15.6	20	20	16	58
												10646	6	1	7.2	24.1	25	30	23	64	24.6	25	30	24	65
												11146	11.5	1	13.8	32.4	35	35	31	71	32.9	35	35	32	72
												11446	14	1	16.8	36.1	40	40	34	74	36.6	40	40	35	75
	575-3-60	5.7	38.9	9				1.1	7.6	0.4		None	-	-	-	11.2	15	15	11	42	11.6	15	15	12	43
												11458	13.8	1	13.3	27.8	30	30	27	55	28.2	30	30	27	56
												12358	23	1	22.1	38.8	40	40	37	64	39.2	40	40	37	65

1. Minimum Circuit Ampacity.
2. Dual Element, Time Delay Type.
3. HACR type per NEC.
4. Non-fused Disconnect, Verify on the unit nameplate that the disconnect is properly sized for the application. Units with field installed electric heat kits may exceed the factory installed disconnect amperage rating.

XQE04-06 Standard Indoor Blower - With Powered Convenience Outlet

Size (Tons)	Nominal Unit Voltage	Compressor 1			Compressor 2			OD Fan Motors (each)	Supply Blower Motor	Pwr Exh Motor	Pwr Conv Outlet	Electric Heat Field Installed Kit 2EK045*				MCA[1] (Amps)	Min Fuse[2]/ Breaker[3] Size (Amps)	Max Fuse[2]/ Breaker[3] Size (Amps)	Min Disconnect Rating[4]		MCA[1] w/Pwr Exh (Amps)	Min Fuse[2]/ Breaker[3] Size w/ Pwr Exh (Amps)	Max Fuse[2]/ Breaker[3] Size w/ Pwr Exh (Amps)	Min Discon-nect Rating[4]/ Pwr Exh	
		RLA	LRA	MCC	RLA	LRA	MCC					Model	kW	Stages	Amps				FLA	LRA				FLA	LRA
04 (3)	208-1-60	15.4	83.9	24				2.3	6.6	1.5	8.6	None	-	-	-	32.5	35	45	33	95	34	35	45	35	98
												10625	4.9	1	23.6	62	70	70	60	119	63.5	70	70	62	122
												11125	7.9	1	38	80	80	80	77	133	81.5	90	90	78	136
	230-1-60	15.4	83.9	24				2.3	6	1.3	8.6	None	-	-	-	31.9	35	45	32	95	33.2	35	45	34	98
												10625	6.5	1	27.1	65.8	70	70	63	122	67.1	70	70	65	125
												11125	10.5	1	43.8	86.7	90	90	83	139	88	90	90	84	142
	208-3-60	10.4	73	16				2.3	6.6	1.1	8.6	None	-	-	-	26.2	30	35	27	84	27.3	30	35	28	87
												10625	4.9	1	13.6	43.2	45	50	43	98	44.3	45	50	44	100
												11125	7.9	1	21.9	53.6	60	60	52	106	54.7	60	60	54	109
												11625	12	1	33.3	67.8	70	70	65	117	68.9	70	70	67	120
	230-3-60	10.4	73	16				2.3	6	1	8.6	None	-	-	-	25.6	30	35	26	84	26.6	30	35	28	87
												10625	6.5	1	15.6	45.1	50	50	44	100	46.1	50	50	46	102
												11125	10.5	1	25.3	57.2	60	60	56	110	58.2	60	60	57	112
												11625	16	1	38.5	73.7	80	80	71	123	74.7	80	80	72	125
	460-3-60	5.8	38	9				1.3	3.2	0.5	8.6	None	-	-	-	14	15	15	14	45	14.5	15	15	15	46
												10646	6	1	7.2	23	25	25	23	52	23.5	25	25	23	53
												11146	11.5	1	13.8	31.3	35	35	30	59	31.8	35	35	31	60
												11446	14	1	16.8	35	35	35	34	62	35.5	40	40	34	63
	575-3-60	3.8	36.5	6				1.1	6	0.4	8.6	None	-	-	-	10	15	15	10	41	10.4	15	15	11	42
												11058	9.2	1	8.9	21.1	25	25	21	50	21.5	25	25	21	51
												11458	13.8	1	13.3	26.6	30	30	26	55	27	30	30	26	56
05 (4)	208-1-60	19.6	130	31				2.3	8.4	1.5	8.6	None	-	-	-	39.5	40	50	40	141	41	45	60	42	145
												10625	4.9	1	23.6	69	70	80	67	165	70.5	80	80	69	168
												11125	7.9	1	38	87	90	90	83	179	88.5	90	90	85	183
	230-1-60	19.6	130	31				2.3	7.6	1.3	8.6	None	-	-	-	38.7	40	50	39	141	40	40	50	40	144
												10625	6.5	1	27.1	72.6	80	80	70	168	73.9	80	80	72	171
												11125	10.5	1	43.8	93.5	100	100	89	185	94.8	100	100	91	188
	208-3-60	13.7	83.1	21				2.3	8.4	1.1	8.6	None	-	-	-	32.1	35	45	33	94	33.2	35	45	34	97
												10625	4.9	1	13.6	49.1	50	50	49	108	50.2	60	60	50	110
												11125	7.9	1	21.9	59.5	60	60	58	116	60.6	70	70	59	119
												11625	12	1	33.3	73.7	80	80	71	128	74.8	80	80	73	130
	230-3-60	13.7	83.1	21				2.3	7.6	1	8.6	None	-	-	-	31.3	35	45	32	94	32.3	35	45	33	97
												10625	6.5	1	15.6	50.8	60	60	50	110	51.8	60	60	51	112
												11125	10.5	1	25.3	62.9	70	70	61	120	63.9	70	70	62	122
												11625	16	1	38.5	79.4	80	80	76	133	80.4	90	90	78	135
	460-3-60	6.2	41	10				1.3	4	0.5	8.6	None	-	-	-	15.3	20	20	16	48	15.8	20	20	16	49
												10646	6	1	7.2	24.3	25	25	24	55	24.8	25	25	25	56
												11146	11.5	1	13.8	32.6	35	35	32	62	33.1	35	35	32	63
												11446	14	1	16.8	36.3	40	40	35	65	36.8	40	40	36	66
	575-3-60	4.8	33	8				1.1	7.6	0.4	8.6	None	-	-	-	11.9	15	15	12	38	12.3	15	15	13	39
												11058	9.2	1	8.9	23	25	25	23	47	23.4	25	25	23	48
												11458	13.8	1	13.3	28.5	30	30	28	51	28.9	30	30	28	52

XQE04-06 Standard Indoor Blower - With Powered Convenience Outlet (Continued)

Size (Tons)	Nominal Unit Voltage	Compressor 1			Compressor 2			OD Fan Motors (each)	Supply Blower Motor	Pwr Exh Motor	Pwr Conv Outlet	Electric Heat Field Installed Kit 2EK045*				MCA[1] (Amps)	Min Fuse[2]/ Breaker[3] Size (Amps)	Max Fuse[2]/ Breaker[3] Size (Amps)	Min Disconnect Rating[4]		MCA[1] w/Pwr Exh (Amps)	Min Fuse[2]/ Breaker[3] Size w/ Pwr Exh (Amps)	Max Fuse[2]/ Breaker[3] Size w/ Pwr Exh (Amps)	Min Discon-nect Rating[4]/ Pwr Exh	
		RLA	LRA	MCC	RLA	LRA	MCC					Model	kW	Stages	Amps				FLA	LRA				FLA	LRA
06 (5)	208-1-60	24.4	144.2	38				2.3	8.4	1.5	8.6	None	-	-	-	45.5	50	60	45	155	47	50	70	47	159
												10625	4.9	1	23.6	75	80	90	72	179	76.5	80	90	74	182
												11125	7.9	1	38	93	100	100	89	193	94.5	100	100	91	197
	230-1-60	24.4	144.2	38				2.3	7.6	1.3	8.6	None	-	-	-	44.7	45	60	44	156	46	50	70	46	158
												10625	6.5	1	27.1	78.6	80	90	76	183	79.9	80	90	77	186
												11125	10.5	1	43.8	99.5	100	110	95	199	100.8	110	110	96	202
	208-3-60	16	110	25				2.3	8.4	1.1	8.6	None	-	-	-	35	35	50	36	121	36.1	40	50	37	124
												10625	4.9	1	13.6	52	60	60	51	135	53.1	60	60	53	137
												11125	7.9	1	21.9	62.4	70	70	61	143	63.5	70	70	62	146
												11625	12	1	33.3	76.6	80	80	74	154	77.7	80	80	75	157
	230-3-60	16	110	25				2.3	7.6	1	8.6	None	-	-	-	34.2	35	50	35	121	35.2	40	50	36	124
												10625	6.5	1	15.6	53.7	60	60	53	137	54.7	60	60	54	139
												11125	10.5	1	25.3	65.8	70	70	64	147	66.8	70	70	65	149
												11625	16	1	38.5	82.3	90	90	79	160	83.3	90	90	80	162
	460-3-60	7.8	52	12				1.3	4	0.5	8.6	None	-	-	-	17.3	20	25	18	59	17.8	20	25	18	60
												10646	6	1	7.2	26.3	30	30	26	66	26.8	30	30	26	67
												11146	11.5	1	13.8	34.6	35	35	33	73	35.1	40	40	34	74
												11446	14	1	16.8	38.3	40	40	37	76	38.8	40	40	37	77
	575-3-60	5.7	38.9	9				1.1	7.6	0.4	8.6	None	-	-	-	13	15	15	13	44	13.4	15	15	14	45
												11458	13.8	1	13.3	29.6	30	30	29	57	30	30	30	29	58
												12358	23	1	22.1	40.6	45	45	39	66	41	45	45	39	67

1. Minimum Circuit Ampacity.
2. Dual Element, Time Delay Type.
3. HACR type per NEC.
4. Non-fused Disconnect, Verify on the unit nameplate that the disconnect is properly sized for the application. Units with field installed electric heat kits may exceed the factory installed disconnect amperage rating.

XQE04-06 Medium Indoor Blower - Without Powered Convenience Outlet

Size (Tons)	Nominal Unit Voltage	Compressor 1			Compressor 2			OD Fan Motors (each)	Supply Blower Motor	Pwr Exh Motor	Pwr Conv Outlet	Electric Heat Field Installed Kit 2EK045*				MCA[1] (Amps)	Min Fuse[2]/ Breaker[3] Size (Amps)	Max Fuse[2]/ Breaker[3] Size (Amps)	Min Disconnect Rating[4]		MCA[1] w/Pwr Exh (Amps)	Min Fuse[2]/ Breaker[3] Size w/ Pwr Exh (Amps)	Max Fuse[2]/ Breaker[3] Size w/ Pwr Exh (Amps)	Min Discon-nect Rating[4]/ Pwr Exh	
		RLA	LRA	MCC	RLA	LRA	MCC					Model	kW	Stages	Amps				FLA	LRA				FLA	LRA
04 (3)	208-1-60	15.4	83.9	24				2.3	7.6	1.5		None	-	-	-	29.2	30	40	29	122	30.7	35	45	31	125
												10625	4.9	1	23.6	58.7	60	60	56	145	60.2	70	70	58	149
												11125	7.9	1	38	76.7	80	80	73	160	78.2	80	80	75	163
	230-1-60	15.4	83.9	24				2.3	7	1.3		None	-	-	-	28.6	30	40	28	124	29.9	30	45	30	127
												10625	6.5	1	27.1	62.5	70	70	60	152	63.8	70	70	61	154
												11125	10.5	1	43.8	83.4	90	90	79	168	84.7	90	90	80	171
	208-3-60	10.4	73	16				2.3	5.2	1.1		None	-	-	-	20.5	25	30	21	100	21.6	25	30	22	103
												10625	4.9	1	13.6	37.5	40	40	36	114	38.6	40	45	37	116
												11125	7.9	1	21.9	47.9	50	50	46	122	49	50	50	47	125
												11625	12	1	33.3	62.1	70	70	59	134	63.2	70	70	60	136
	230-3-60	10.4	73	16				2.3	5.2	1		None	-	-	-	20.5	25	30	21	103	21.5	25	30	22	105
												10625	6.5	1	15.6	40	40	45	39	119	41	45	45	40	121
												11125	10.5	1	25.3	52.1	60	60	50	128	53.1	60	60	51	131
												11625	16	1	38.5	68.6	70	70	65	142	69.6	70	70	66	144
	460-3-60	5.8	38	9				1.3	2.6	0.5		None	-	-	-	11.2	15	15	11	53	11.7	15	15	12	55
												10646	6	1	7.2	20.2	25	25	19	61	20.7	25	25	20	62
												11146	11.5	1	13.8	28.5	30	30	27	67	29	30	30	28	68
												11446	14	1	16.8	32.2	35	35	30	70	32.7	35	35	31	71
	575-3-60	3.8	36.5	6				1.1	2	0.4		None	-	-	-	7.9	15	15	8	49	8.3	15	15	8	50
												11058	9.2	1	8.9	19	20	20	18	58	19.4	20	20	19	59
												11458	13.8	1	13.3	24.5	25	25	23	62	24.9	25	25	24	63
05 (4)	208-1-60	19.6	130	31				2.3	7.6	1.5		None	-	-	-	34.4	35	50	34	168	35.9	40	50	36	171
												10625	4.9	1	23.6	63.9	70	70	61	191	65.4	70	70	63	195
												11125	7.9	1	38	81.9	90	90	78	206	83.4	90	90	79	209
	230-1-60	19.6	130	31				2.3	7	1.3		None	-	-	-	33.8	35	50	33	171	35.1	40	50	35	173
												10625	6.5	1	27.1	67.7	70	80	64	198	69	70	80	66	201
												11125	10.5	1	43.8	88.6	90	90	84	214	89.9	90	90	85	217
	208-3-60	13.7	83.1	21				2.3	5.2	1.1		None	-	-	-	24.6	25	35	24	110	25.7	30	35	26	113
												10625	4.9	1	13.6	41.6	45	50	40	124	42.7	45	50	41	126
												11125	7.9	1	21.9	52	60	60	50	132	53.1	60	60	51	135
												11625	12	1	33.3	66.2	70	70	63	144	67.3	70	70	64	146
	230-3-60	13.7	83.1	21				2.3	5.2	1		None	-	-	-	24.6	25	35	24	113	25.6	30	35	26	115
												10625	6.5	1	15.6	44.1	45	50	42	129	45.1	50	50	43	131
												11125	10.5	1	25.3	56.2	60	60	53	138	57.2	60	60	55	141
												11625	16	1	38.5	72.7	80	80	69	152	73.7	80	80	70	154
	460-3-60	6.2	41	10				1.3	2.6	0.5		None	-	-	-	11.7	15	15	12	56	12.2	15	15	12	58
												10646	6	1	7.2	20.7	25	25	20	64	21.2	25	25	20	65
												11146	11.5	1	13.8	29	30	30	27	70	29.5	30	30	28	71
												11446	14	1	16.8	32.7	35	35	31	73	33.2	35	35	32	74
	575-3-60	4.8	33	8				1.1	2	0.4		None	-	-	-	9.1	15	15	9	45	9.5	15	15	10	46
												11058	9.2	1	8.9	20.2	25	25	19	54	20.6	25	25	20	55
												11458	13.8	1	13.3	25.7	30	30	24	59	26.1	30	30	25	60

XQE04-06 Medium Indoor Blower - Without Powered Convenience Outlet (Continued)

Size (Tons)	Nominal Unit Voltage	Compressor 1			Compressor 2			OD Fan Motors (each)	Supply Blower Motor	Pwr Exh Motor	Pwr Conv Outlet	Electric Heat Field Installed Kit 2EK045*				MCA[1] (Amps)	Min Fuse[2]/ Breaker[3] Size (Amps)	Max Fuse[2]/ Breaker[3] Size (Amps)	Min Disconnect Rating[4]		MCA[1] w/Pwr Exh (Amps)	Min Fuse[2]/ Breaker[3] Size w/ Pwr Exh (Amps)	Max Fuse[2]/ Breaker[3] Size w/ Pwr Exh (Amps)	Min Discon-nect Rating[4]/ Pwr Exh	
		RLA	LRA	MCC	RLA	LRA	MCC					Model	kW	Stages	Amps				FLA	LRA				FLA	LRA
06 (5)	208-1-60	24.4	144.2	38				2.3	6.8	1.5		None	-	-	-	39.6	40	60	39	182	41.1	45	60	40	185
												10625	4.9	1	23.6	69.1	70	80	66	205	70.6	80	80	67	209
												11125	7.9	1	38	87.1	90	100	82	220	88.6	90	100	84	223
	230-1-60	24.4	144.2	38				2.3	6.2	1.3		None	-	-	-	39	40	60	38	182	40.3	45	60	39	185
												10625	6.5	1	27.1	72.9	80	90	69	209	74.2	80	90	70	212
												11125	10.5	1	43.8	93.8	100	100	88	226	95.1	100	100	90	229
	208-3-60	16	110	25				2.3	7	1.1		None	-	-	-	29.3	30	45	29	175	30.4	35	45	30	177
												10625	4.9	1	13.6	46.3	50	50	45	189	47.4	50	60	46	191
												11125	7.9	1	21.9	56.7	60	60	54	197	57.8	60	60	56	199
												11625	12	1	33.3	70.9	80	80	67	208	72	80	80	69	211
	230-3-60	16	110	25				2.3	7.2	1		None	-	-	-	29.5	30	45	29	177	30.5	35	45	30	179
												10625	6.5	1	15.6	49	50	60	47	192	50	50	60	48	195
												11125	10.5	1	25.3	61.1	70	70	58	202	62.1	70	70	60	204
												11625	16	1	38.5	77.6	80	80	74	215	78.6	80	80	75	218
	460-3-60	7.8	52	12				1.3	3.6	0.5		None	-	-	-	14.7	15	20	15	86	15.2	20	20	15	87
												10646	6	1	7.2	23.7	25	25	23	93	24.2	25	25	23	94
												11146	11.5	1	13.8	32	35	35	30	100	32.5	35	35	31	101
												11446	14	1	16.8	35.7	40	40	34	103	36.2	40	40	35	104
	575-3-60	5.7	38.9	9				1.1	2.5	0.4		None	-	-	-	10.7	15	15	11	59	11.1	15	15	11	60
												11458	13.8	1	13.3	27.3	30	30	26	72	27.7	30	30	26	73
												12358	23	1	22.1	38.3	40	40	36	81	38.7	40	40	37	82

1. Minimum Circuit Ampacity.
2. Dual Element, Time Delay Type.
3. HACR type per NEC.
4. Non-fused Disconnect, Verify on the unit nameplate that the disconnect is properly sized for the application. Units with field installed electric heat kits may exceed the factory installed disconnect amperage rating.

XQE04-06 Medium Indoor Blower - With Powered Convenience Outlet

Size (Tons)	Nominal Unit Voltage	Compressor 1			Compressor 2			OD Fan Motors (each)	Supply Blower Motor	Pwr Exh Motor	Pwr Conv Outlet	Electric Heat Field Installed Kit 2EK045*				MCA[1] (Amps)	Min Fuse[2]/ Breaker[3] Size (Amps)	Max Fuse[2]/ Breaker[3] Size (Amps)	Min Disconnect Rating[4]		MCA[1] w/Pwr Exh (Amps)	Min Fuse[2]/ Breaker[3] Size w/ Pwr Exh (Amps)	Max Fuse[2]/ Breaker[3] Size w/ Pwr Exh (Amps)	Min Discon-nect Rating[4]/ Pwr Exh	
		RLA	LRA	MCC	RLA	LRA	MCC					Model	kW	Stages	Amps				FLA	LRA				FLA	LRA
04 (3)	208-1-60	15.4	83.9	24				2.3	7.6	1.5	8.6	None	-	-	-	33.5	35	45	34	126	35	35	50	36	129
												10625	4.9	1	23.6	63	70	70	61	150	64.5	70	70	63	153
												11125	7.9	1	38	81	90	90	78	164	82.5	90	90	79	167
	230-1-60	15.4	83.9	24				2.3	7	1.3	8.6	None	-	-	-	32.9	35	45	33	129	34.2	35	45	35	132
												10625	6.5	1	27.1	66.8	70	70	65	156	68.1	70	70	66	159
												11125	10.5	1	43.8	87.7	90	90	84	173	89	90	90	85	175
	208-3-60	10.4	73	16				2.3	5.2	1.1	8.6	None	-	-	-	24.8	25	35	26	105	25.9	30	35	27	107
												10625	4.9	1	13.6	41.8	45	45	41	118	42.9	45	45	42	121
												11125	7.9	1	21.9	52.2	60	60	51	126	53.3	60	60	52	129
												11625	12	1	33.3	66.4	70	70	64	138	67.5	70	70	65	140
	230-3-60	10.4	73	16				2.3	5.2	1	8.6	None	-	-	-	24.8	25	35	26	107	25.8	30	35	27	110
												10625	6.5	1	15.6	44.3	45	50	43	123	45.3	50	50	45	125
												11125	10.5	1	25.3	56.4	60	60	55	133	57.4	60	60	56	135
												11625	16	1	38.5	72.9	80	80	70	146	73.9	80	80	71	148
	460-3-60	5.8	38	9				1.3	2.6	0.5	8.6	None	-	-	-	13.4	15	15	14	56	13.9	15	15	14	57
												10646	6	1	7.2	22.4	25	25	22	63	22.9	25	25	23	64
												11146	11.5	1	13.8	30.7	35	35	30	69	31.2	35	35	30	70
												11446	14	1	16.8	34.4	35	35	33	72	34.9	35	35	34	73
	575-3-60	3.8	36.5	6				1.1	2	0.4	8.6	None	-	-	-	9.6	15	15	10	51	10	15	15	10	51
												11058	9.2	1	8.9	20.7	25	25	20	59	21.1	25	25	21	60
												11458	13.8	1	13.3	26.2	30	30	25	64	26.6	30	30	26	65
05 (4)	208-1-60	19.6	130	31				2.3	7.6	1.5	8.6	None	-	-	-	38.7	40	50	39	172	40.2	45	50	41	176
												10625	4.9	1	23.6	68.2	70	80	66	196	69.7	70	80	68	199
												11125	7.9	1	38	86.2	90	90	83	210	87.7	90	90	84	214
	230-1-60	19.6	130	31				2.3	7	1.3	8.6	None	-	-	-	38.1	40	50	38	175	39.4	40	50	40	178
												10625	6.5	1	27.1	72	80	80	69	202	73.3	80	80	71	205
												11125	10.5	1	43.8	92.9	100	100	89	219	94.2	100	100	90	222
	208-3-60	13.7	83.1	21				2.3	5.2	1.1	8.6	None	-	-	-	28.9	30	40	29	115	30	30	40	31	117
												10625	4.9	1	13.6	45.9	50	50	45	128	47	50	50	46	131
												11125	7.9	1	21.9	56.3	60	60	55	137	57.4	60	60	56	139
												11625	12	1	33.3	70.5	80	80	68	148	71.6	80	80	69	150
	230-3-60	13.7	83.1	21				2.3	5.2	1	8.6	None	-	-	-	28.9	30	40	29	117	29.9	30	40	30	120
												10625	6.5	1	15.6	48.4	50	50	47	133	49.4	50	50	48	135
												11125	10.5	1	25.3	60.5	70	70	58	143	61.5	70	70	60	145
												11625	16	1	38.5	77	80	80	74	156	78	80	80	75	158
	460-3-60	6.2	41	10				1.3	2.6	0.5	8.6	None	-	-	-	13.9	15	20	14	59	14.4	15	20	15	60
												10646	6	1	7.2	22.9	25	25	22	66	23.4	25	25	23	67
												11146	11.5	1	13.8	31.2	35	35	30	72	31.7	35	35	31	73
												11446	14	1	16.8	34.9	35	35	33	75	35.4	40	40	34	76
	575-3-60	4.8	33	8				1.1	2	0.4	8.6	None	-	-	-	10.8	15	15	11	47	11.2	15	15	12	48
												11058	9.2	1	8.9	21.9	25	25	21	56	22.3	25	25	22	57
												11458	13.8	1	13.3	27.4	30	30	26	60	27.8	30	30	27	61

XQE04-06 Medium Indoor Blower - With Powered Convenience Outlet (Continued)

Size (Tons)	Nominal Unit Voltage	Compressor 1			Compressor 2			OD Fan Motors (each)	Supply Blower Motor	Pwr Exh Motor	Pwr Conv Outlet	Electric Heat Field Installed Kit 2EK045*				MCA[1] (Amps)	Min Fuse[2]/ Breaker[3] Size (Amps)	Max Fuse[2]/ Breaker[3] Size (Amps)	Min Disconnect Rating[4]		MCA[1] w/Pwr Exh (Amps)	Min Fuse[2]/ Breaker[3] Size w/ Pwr Exh (Amps)	Max Fuse[2]/ Breaker[3] Size w/ Pwr Exh (Amps)	Min Discon-nect Rating[4]/ Pwr Exh	
		RLA	LRA	MCC	RLA	LRA	MCC					Model	kW	Stages	Amps				FLA	LRA				FLA	LRA
06 (5)	208-1-60	24.4	144.2	38				2.3	6.8	1.5	8.6	None	-	-	-	43.9	45	60	43	186	45.4	50	60	45	189
												10625	4.9	1	23.6	73.4	80	90	71	209	74.9	80	90	72	213
												11125	7.9	1	38	91.4	100	100	87	224	92.9	100	100	89	227
	230-1-60	24.4	144.2	38				2.3	6.2	1.3	8.6	None	-	-	-	43.3	45	60	43	187	44.6	45	60	44	189
												10625	6.5	1	27.1	77.2	80	90	74	214	78.5	80	90	75	217
												11125	10.5	1	43.8	98.1	100	110	93	230	99.4	100	110	95	233
	208-3-60	16	110	25				2.3	7	1.1	8.6	None	-	-	-	33.6	35	45	34	179	34.7	35	50	35	182
												10625	4.9	1	13.6	50.6	60	60	50	193	51.7	60	60	51	195
												11125	7.9	1	21.9	61	70	70	59	201	62.1	70	70	60	204
												11625	12	1	33.3	75.2	80	80	72	213	76.3	80	80	74	215
	230-3-60	16	110	25				2.3	7.2	1	8.6	None	-	-	-	33.8	35	45	34	181	34.8	35	50	35	183
												10625	6.5	1	15.6	53.3	60	60	52	197	54.3	60	60	53	199
												11125	10.5	1	25.3	65.4	70	70	63	206	66.4	70	70	65	209
												11625	16	1	38.5	81.9	90	90	79	220	82.9	90	90	80	222
	460-3-60	7.8	52	12				1.3	3.6	0.5	8.6	None	-	-	-	16.9	20	20	17	88	17.4	20	20	18	89
												10646	6	1	7.2	25.9	30	30	25	95	26.4	30	30	26	96
												11146	11.5	1	13.8	34.2	35	35	33	102	34.7	35	35	34	103
												11446	14	1	16.8	37.9	40	40	36	105	38.4	40	40	37	106
	575-3-60	5.7	38.9	9				1.1	2.5	0.4	8.6	None	-	-	-	12.4	15	15	13	61	12.8	15	15	13	62
												11458	13.8	1	13.3	29	30	30	28	74	29.4	30	30	28	75
												12358	23	1	22.1	40	40	40	38	83	40.4	45	45	39	84

1. Minimum Circuit Ampacity.
2. Dual Element, Time Delay Type.
3. HACR type per NEC.
4. Non-fused Disconnect, Verify on the unit nameplate that the disconnect is properly sized for the application. Units with field installed electric heat kits may exceed the factory installed disconnect amperage rating.

XQE04-06 High Indoor Blower - Without Powered Convenience Outlet

Size (Tons)	Nominal Unit Voltage	Compressor 1			Compressor 2			OD Fan Motors (each)	Supply Blower Motor	Pwr Exh Motor	Pwr Conv Outlet	Electric Heat Field Installed Kit 2EK045*				MCA[1] (Amps)	Min Fuse[2]/ Breaker[3] Size (Amps)	Max Fuse[2]/ Breaker[3] Size (Amps)	Min Disconnect Rating[4]		MCA[1] w/Pwr Exh (Amps)	Min Fuse[2]/ Breaker[3] Size w/ Pwr Exh (Amps)	Max Fuse[2]/ Breaker[3] Size w/ Pwr Exh (Amps)	Min Discon-nect Rating[4]/ Pwr Exh	
		RLA	LRA	MCC	RLA	LRA	MCC					Model	kW	Stages	Amps				FLA	LRA				FLA	LRA
04 (3)	208-3-60	10.4	73	16				2.3	5.2	1.1		None	-	-	-	20.5	25	30	21	100	21.6	25	30	22	103
												10625	4.9	1	13.6	37.5	40	40	36	114	38.6	40	45	37	116
												11125	7.9	1	21.9	47.9	50	50	46	122	49	50	50	47	125
												11625	12	1	33.3	62.1	70	70	59	134	63.2	70	70	60	136
	230-3-60	10.4	73	16				2.3	5.2	1		None	-	-	-	20.5	25	30	21	103	21.5	25	30	22	105
												10625	6.5	1	15.6	40	40	45	39	119	41	45	45	40	121
												11125	10.5	1	25.3	52.1	60	60	50	128	53.1	60	60	51	131
												11625	16	1	38.5	68.6	70	70	65	142	69.6	70	70	66	144
	460-3-60	5.8	38	9				1.3	2.6	0.5		None	-	-	-	11.2	15	15	11	53	11.7	15	15	12	55
												10646	6	1	7.2	20.2	25	25	19	61	20.7	25	25	20	62
												11146	11.5	1	13.8	28.5	30	30	27	67	29	30	30	28	68
												11446	14	1	16.8	32.2	35	35	30	70	32.7	35	35	31	71
	575-3-60	3.8	36.5	6				1.1	2	0.4		None	-	-	-	7.9	15	15	8	49	8.3	15	15	8	50
												11058	9.2	1	8.9	19	20	20	18	58	19.4	20	20	19	59
												11458	13.8	1	13.3	24.5	25	25	23	62	24.9	25	25	24	63
05 (4)	208-3-60	13.7	83.1	21				2.3	5.2	1.1		None	-	-	-	24.6	25	35	24	110	25.7	30	35	26	113
												10625	4.9	1	13.6	41.6	45	50	40	124	42.7	45	50	41	126
												11125	7.9	1	21.9	52	60	60	50	132	53.1	60	60	51	135
												11625	12	1	33.3	66.2	70	70	63	144	67.3	70	70	64	146
	230-3-60	13.7	83.1	21				2.3	5.2	1		None	-	-	-	24.6	25	35	24	113	25.6	30	35	26	115
												10625	6.5	1	15.6	44.1	45	50	42	129	45.1	50	50	43	131
												11125	10.5	1	25.3	56.2	60	60	53	138	57.2	60	60	55	141
												11625	16	1	38.5	72.7	80	80	69	152	73.7	80	80	70	154
	460-3-60	6.2	41	10				1.3	2.6	0.5		None	-	-	-	11.7	15	15	12	56	12.2	15	15	12	58
												10646	6	1	7.2	20.7	25	25	20	64	21.2	25	25	20	65
												11146	11.5	1	13.8	29	30	30	27	70	29.5	30	30	28	71
												11446	14	1	16.8	32.7	35	35	31	73	33.2	35	35	32	74
	575-3-60	4.8	33	8				1.1	2	0.4		None	-	-	-	9.1	15	15	9	45	9.5	15	15	10	46
												11058	9.2	1	8.9	20.2	25	25	19	54	20.6	25	25	20	55
												11458	13.8	1	13.3	25.7	30	30	24	59	26.1	30	30	25	60
06 (5)	208-3-60	16	110	25				2.3	8.9	1.1		None	-	-	-	31.2	35	45	31	192	32.3	35	45	33	194
												10625	4.9	1	13.6	48.2	50	60	47	205	49.3	50	60	48	208
												11125	7.9	1	21.9	58.6	60	60	56	214	59.7	60	70	58	216
												11625	12	1	33.3	72.8	80	80	70	225	73.9	80	80	71	227
	230-3-60	16	110	25				2.3	8.2	1		None	-	-	-	30.5	35	45	30	194	31.5	35	45	32	196
												10625	6.5	1	15.6	50	50	60	48	210	51	60	60	50	212
												11125	10.5	1	25.3	62.1	70	70	60	219	63.1	70	70	61	222
												11625	16	1	38.5	78.6	80	80	75	233	79.6	80	80	76	235
	460-3-60	7.8	52	12				1.3	4.1	0.5		None	-	-	-	15.2	20	20	15	89	15.7	20	20	16	91
												10646	6	1	7.2	24.2	25	30	23	97	24.7	25	30	24	98
												11146	11.5	1	13.8	32.5	35	35	31	103	33	35	35	32	104
												11446	14	1	16.8	36.2	40	40	35	106	36.7	40	40	35	107
	575-3-60	5.7	38.9	9				1.1	3.2	0.4		None	-	-	-	11.4	15	15	12	67	11.8	15	15	12	68
												11458	13.8	1	13.3	28	30	30	27	81	28.4	30	30	27	82
												12358	23	1	22.1	39	40	40	37	89	39.4	40	40	37	90

1. Minimum Circuit Ampacity.
2. Dual Element, Time Delay Type.
3. HACR type per NEC.
4. Non-fused Disconnect, Verify on the unit nameplate that the disconnect is properly sized for the application. Units with field installed electric heat kits may exceed the factory installed disconnect amperage rating.

XQE04-06 High Indoor Blower - With Powered Convenience Outlet

Size (Tons)	Nominal Unit Voltage	Compressor 1			Compressor 2			OD Fan Motors (each)	Supply Blower Motor	Pwr Exh Motor	Pwr Conv Outlet	Electric Heat Field Installed Kit 2EK045*				MCA[1] (Amps)	Min Fuse[2]/ Breaker[3] Size (Amps)	Max Fuse[2]/ Breaker[3] Size (Amps)	Min Disconnect Rating[4]		MCA[1] w/Pwr Exh (Amps)	Min Fuse[2]/ Breaker[3] Size w/ Pwr Exh (Amps)	Max Fuse[2]/ Breaker[3] Size w/ Pwr Exh (Amps)	Min Discon-nect Rating[4]/ Pwr Exh	
		RLA	LRA	MCC	RLA	LRA	MCC					Model	kW	Stages	Amps				FLA	LRA				FLA	LRA
04 (3)	208-3-60	10.4	73	16				2.3	5.2	1.1	8.6	None	-	-	-	24.8	25	35	26	105	25.9	30	35	27	107
												10625	4.9	1	13.6	41.8	45	45	41	118	42.9	45	45	42	121
												11125	7.9	1	21.9	52.2	60	60	51	126	53.3	60	60	52	129
												11625	12	1	33.3	66.4	70	70	64	138	67.5	70	70	65	140
	230-3-60	10.4	73	16				2.3	5.2	1	8.6	None	-	-	-	24.8	25	35	26	107	25.8	30	35	27	110
												10625	6.5	1	15.6	44.3	45	50	43	123	45.3	50	50	45	125
												11125	10.5	1	25.3	56.4	60	60	55	133	57.4	60	60	56	135
												11625	16	1	38.5	72.9	80	80	70	146	73.9	80	80	71	148
	460-3-60	5.8	38	9				1.3	2.6	0.5	8.6	None	-	-	-	13.4	15	15	14	56	13.9	15	15	14	57
												10646	6	1	7.2	22.4	25	25	22	63	22.9	25	25	23	64
												11146	11.5	1	13.8	30.7	35	35	30	69	31.2	35	35	30	70
												11446	14	1	16.8	34.4	35	35	33	72	34.9	35	35	34	73
	575-3-60	3.8	36.5	6				1.1	2	0.4	8.6	None	-	-	-	9.6	15	15	10	51	10	15	15	10	51
												11058	9.2	1	8.9	20.7	25	25	20	59	21.1	25	25	21	60
												11458	13.8	1	13.3	26.2	30	30	25	64	26.6	30	30	26	65
05 (4)	208-3-60	13.7	83.1	21				2.3	5.2	1.1	8.6	None	-	-	-	28.9	30	40	29	115	30	30	40	31	117
												10625	4.9	1	13.6	45.9	50	50	45	128	47	50	50	46	131
												11125	7.9	1	21.9	56.3	60	60	55	137	57.4	60	60	56	139
												11625	12	1	33.3	70.5	80	80	68	148	71.6	80	80	69	150
	230-3-60	13.7	83.1	21				2.3	5.2	1	8.6	None	-	-	-	28.9	30	40	29	117	29.9	30	40	30	120
												10625	6.5	1	15.6	48.4	50	50	47	133	49.4	50	50	48	135
												11125	10.5	1	25.3	60.5	70	70	58	143	61.5	70	70	60	145
												11625	16	1	38.5	77	80	80	74	156	78	80	80	75	158
	460-3-60	6.2	41	10				1.3	2.6	0.5	8.6	None	-	-	-	13.9	15	20	14	59	14.4	15	20	15	60
												10646	6	1	7.2	22.9	25	25	22	66	23.4	25	25	23	67
												11146	11.5	1	13.8	31.2	35	35	30	72	31.7	35	35	31	73
												11446	14	1	16.8	34.9	35	35	33	75	35.4	40	40	34	76
	575-3-60	4.8	33	8				1.1	2	0.4	8.6	None	-	-	-	10.8	15	15	11	47	11.2	15	15	12	48
												11058	9.2	1	8.9	21.9	25	25	21	56	22.3	25	25	22	57
												11458	13.8	1	13.3	27.4	30	30	26	60	27.8	30	30	27	61
06 (5)	208-3-60	16	110	25				2.3	8.9	1.1	8.6	None	-	-	-	35.5	40	50	36	196	36.6	40	50	37	198
												10625	4.9	1	13.6	52.5	60	60	52	210	53.6	60	60	53	212
												11125	7.9	1	21.9	62.9	70	70	61	218	64	70	70	63	220
												11625	12	1	33.3	77.1	80	80	75	229	78.2	80	80	76	232
	230-3-60	16	110	25				2.3	8.2	1	8.6	None	-	-	-	34.8	35	50	35	198	35.8	40	50	37	201
												10625	6.5	1	15.6	54.3	60	60	53	214	55.3	60	60	55	216
												11125	10.5	1	25.3	66.4	70	70	65	224	67.4	70	70	66	226
												11625	16	1	38.5	82.9	90	90	80	237	83.9	90	90	81	239
	460-3-60	7.8	52	12				1.3	4.1	0.5	8.6	None	-	-	-	17.4	20	25	18	92	17.9	20	25	18	93
												10646	6	1	7.2	26.4	30	30	26	99	26.9	30	30	27	100
												11146	11.5	1	13.8	34.7	35	35	34	105	35.2	40	40	34	106
												11446	14	1	16.8	38.4	40	40	37	108	38.9	40	40	38	109
	575-3-60	5.7	38.9	9				1.1	3.2	0.4	8.6	None	-	-	-	13.1	15	15	13	69	13.5	15	15	14	70
												11458	13.8	1	13.3	29.7	30	30	29	82	30.1	35	35	29	83
												12358	23	1	22.1	40.7	45	45	39	91	41.1	45	45	39	92

1. Minimum Circuit Ampacity.
2. Dual Element, Time Delay Type.
3. HACR type per NEC.
4. Non-fused Disconnect, Verify on the unit nameplate that the disconnect is properly sized for the application. Units with field installed electric heat kits may exceed the factory installed disconnect amperage rating.

Typical Wiring Diagrams

XYE04-09, XXEA7-12, XQE04-06 Typical Wiring Diagrams

Typical XYE04-06, XQE04-06 Heat Pump w/o Heat 208/230-1-60 Direct Drive Elementary Diagram Power Circuit

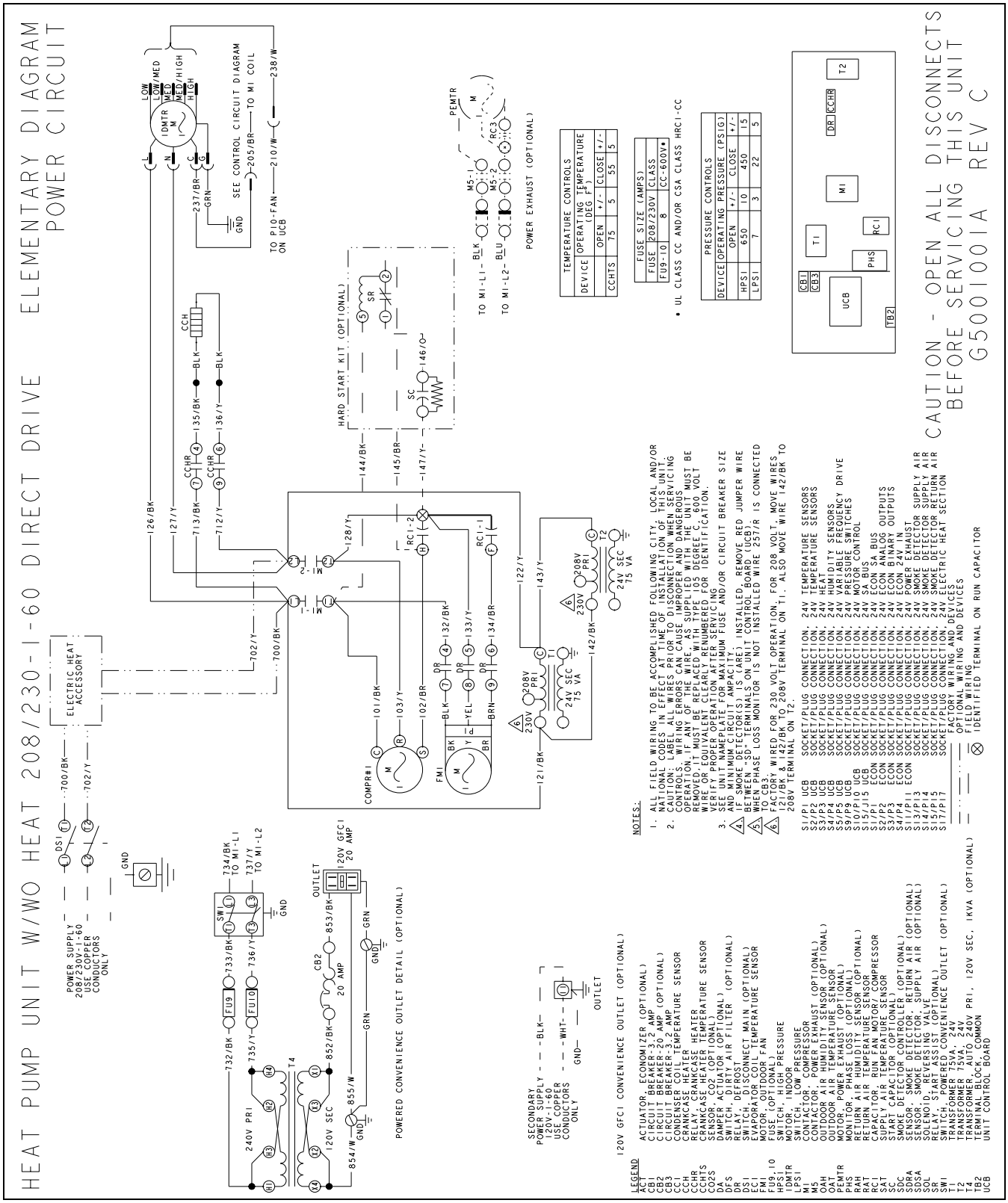

Typical XYE04-06, XQE04-06 Heat Pump w/o Heat 208/230, 460-3-60 Direct Drive Elementary Diagram Power Circuit

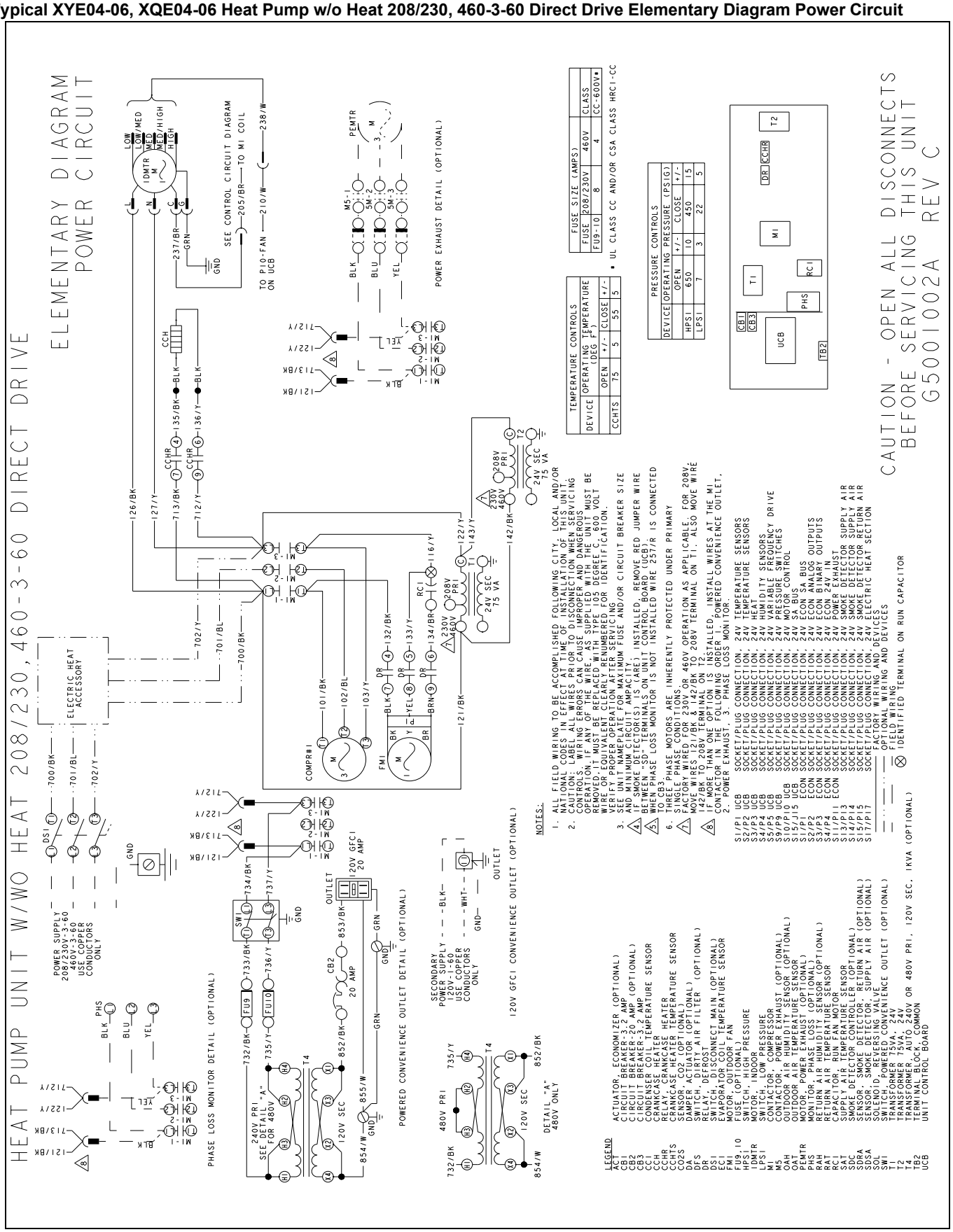

Typical XYE04-06, XQE04-06 Cooling Unit w/o Heat 575-3-60 Direct Drive Elementary Diagram Power Circuit

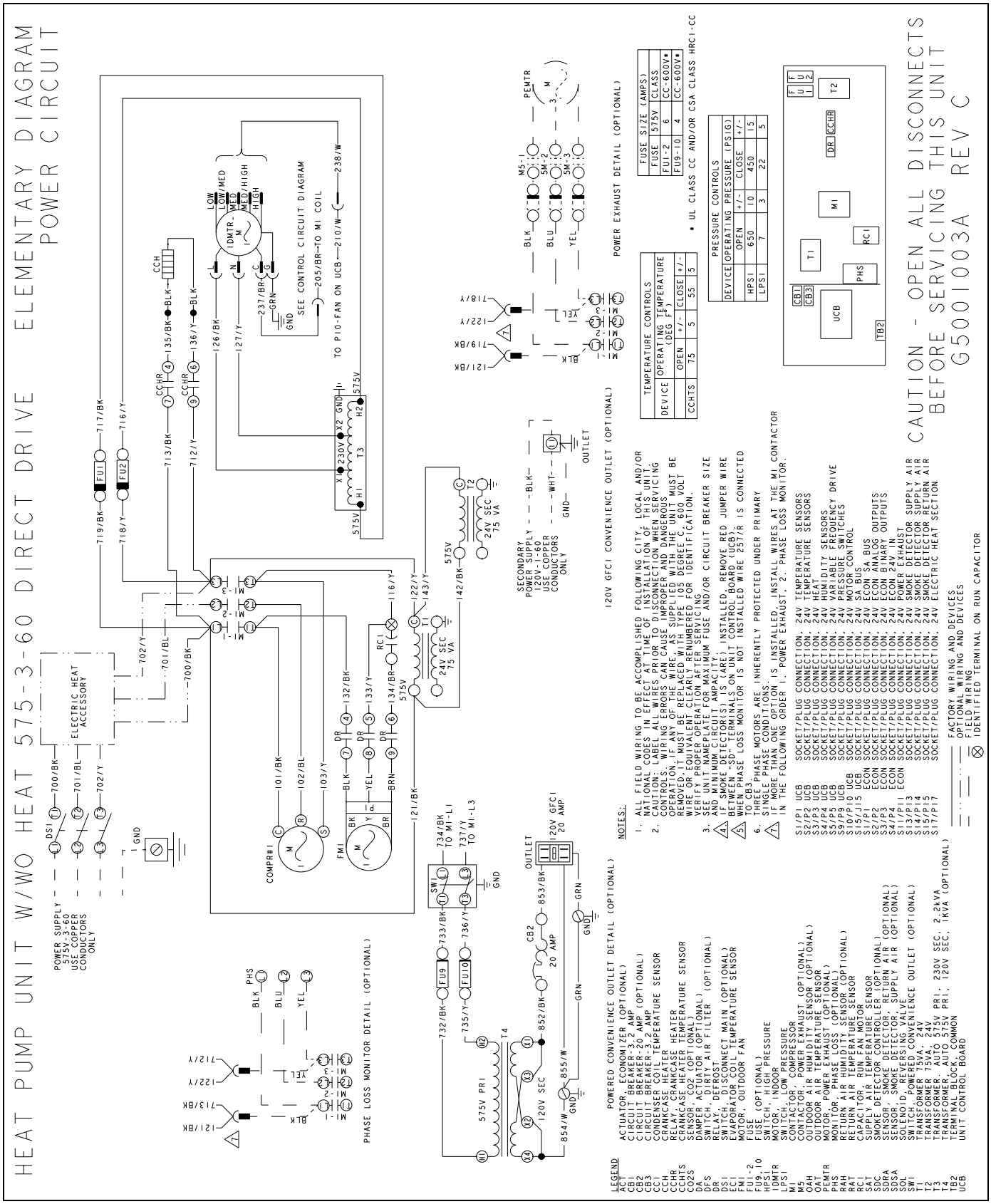

Typical XYE04-06, XQE04-06 Heat Pump Unit w/o Heat 208/230-1-60 Belt Drive Elementary Diagram Power Circuit

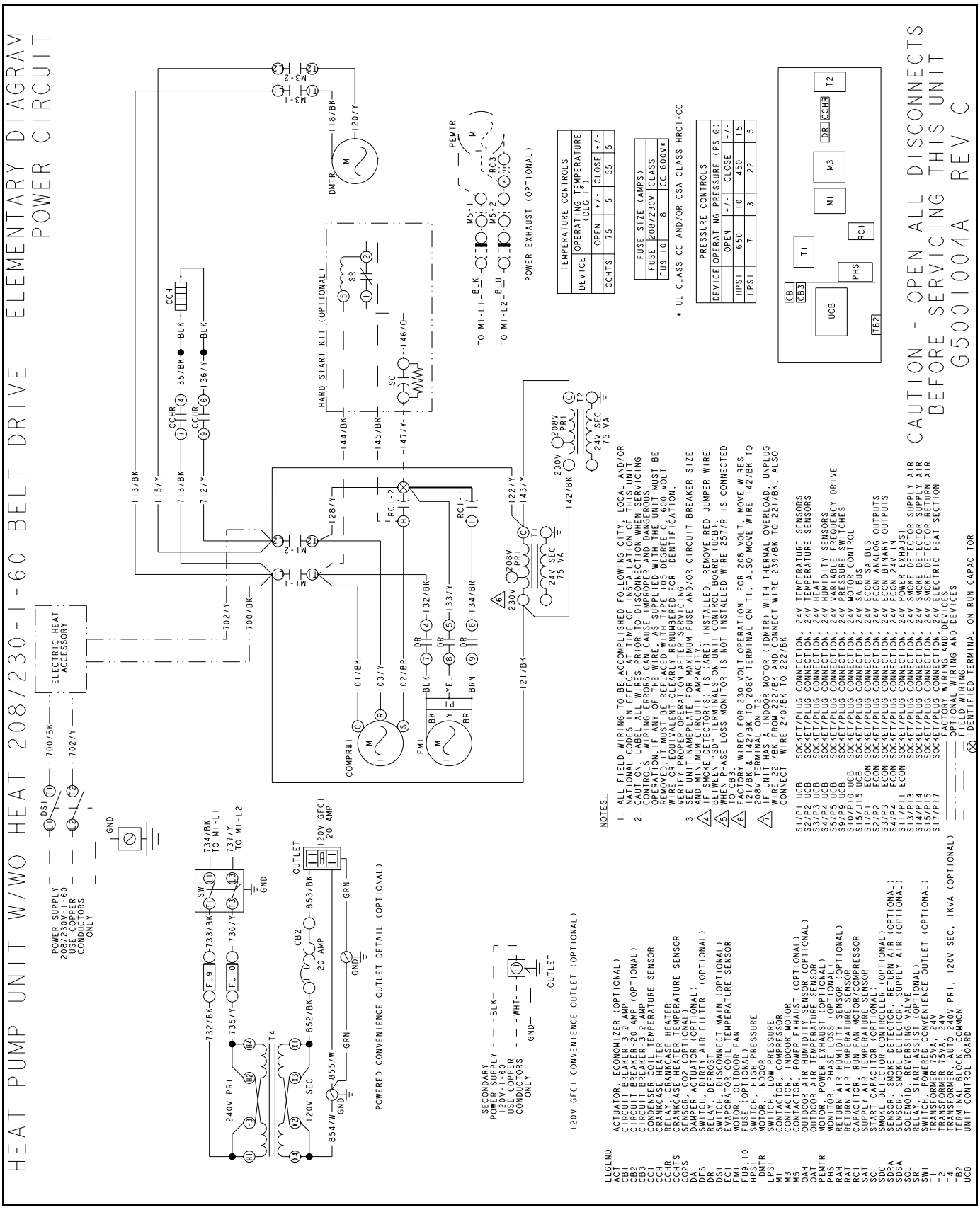

Typical XYE04-06, XQE04-06 Unit w/o Heat 208/230, 460, 575-3-60 Belt Drive Elementary Diagram Power Circuit

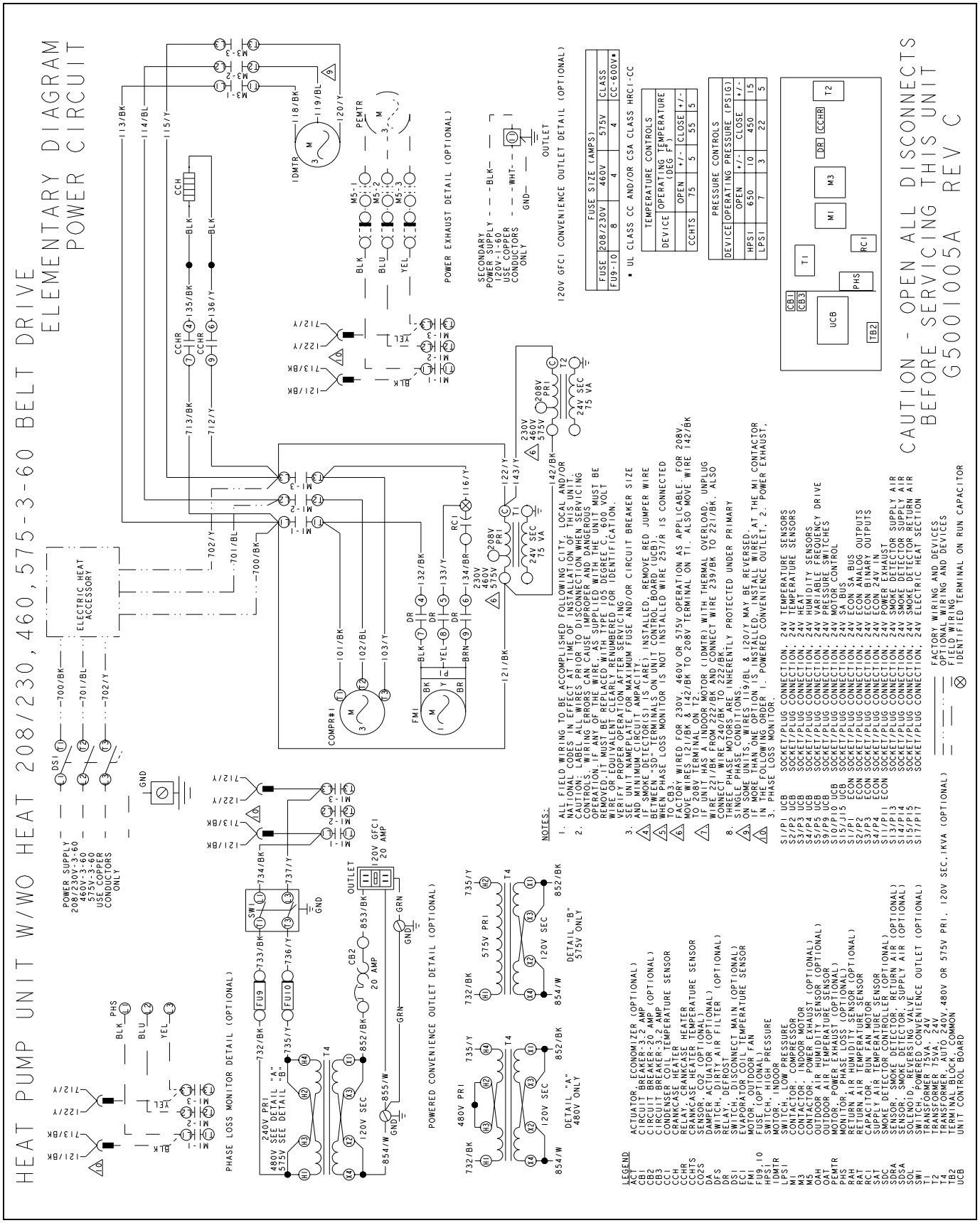

Typical XYE04-06, XQE04-06 Heat Pump Unit Direct Drive Elementary Diagram Control Circuit

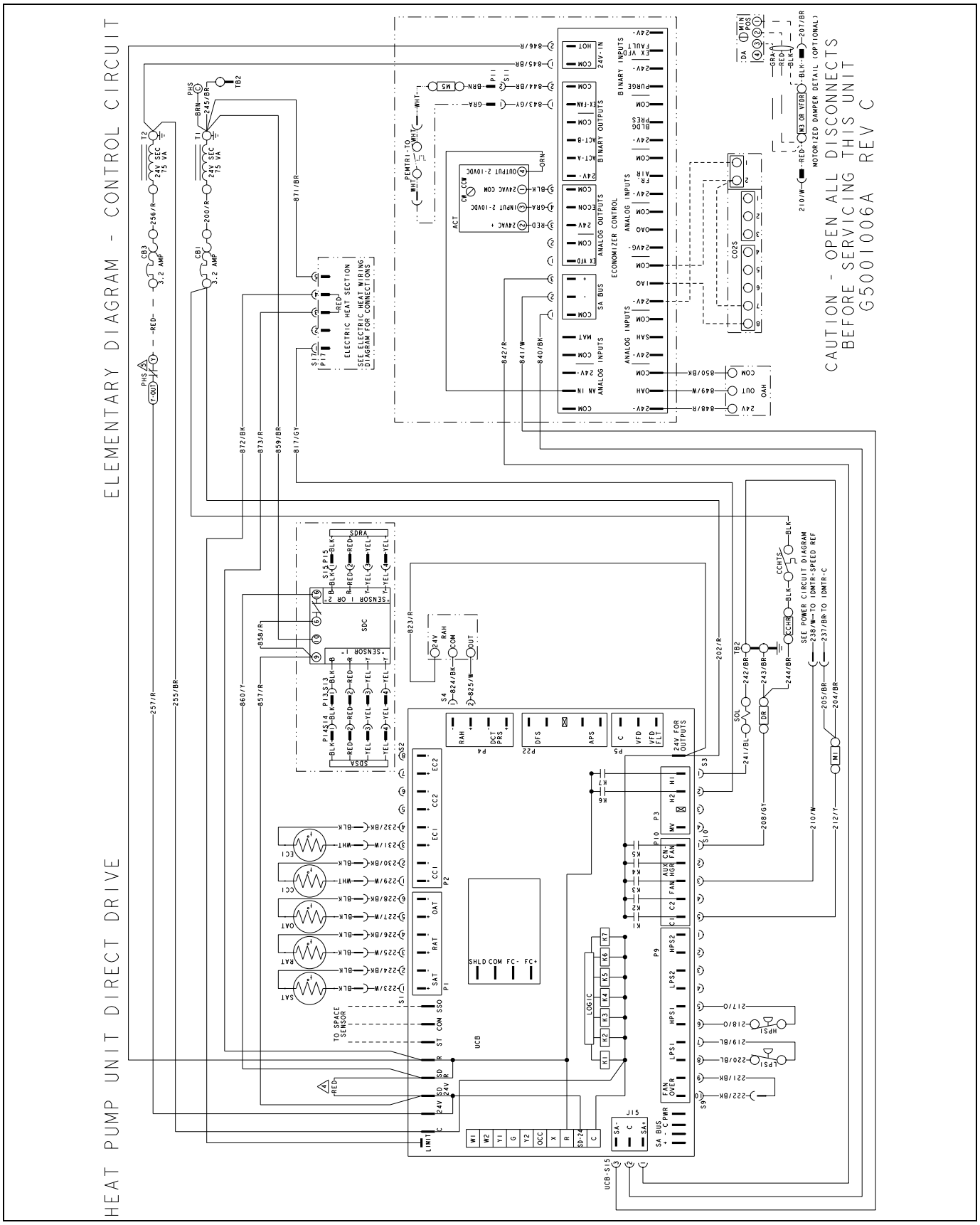

Typical XYE04-06, XXEA7, XQE04-06 Heat Pump Unit Belt Drive Elementary Diagram Control Circuit

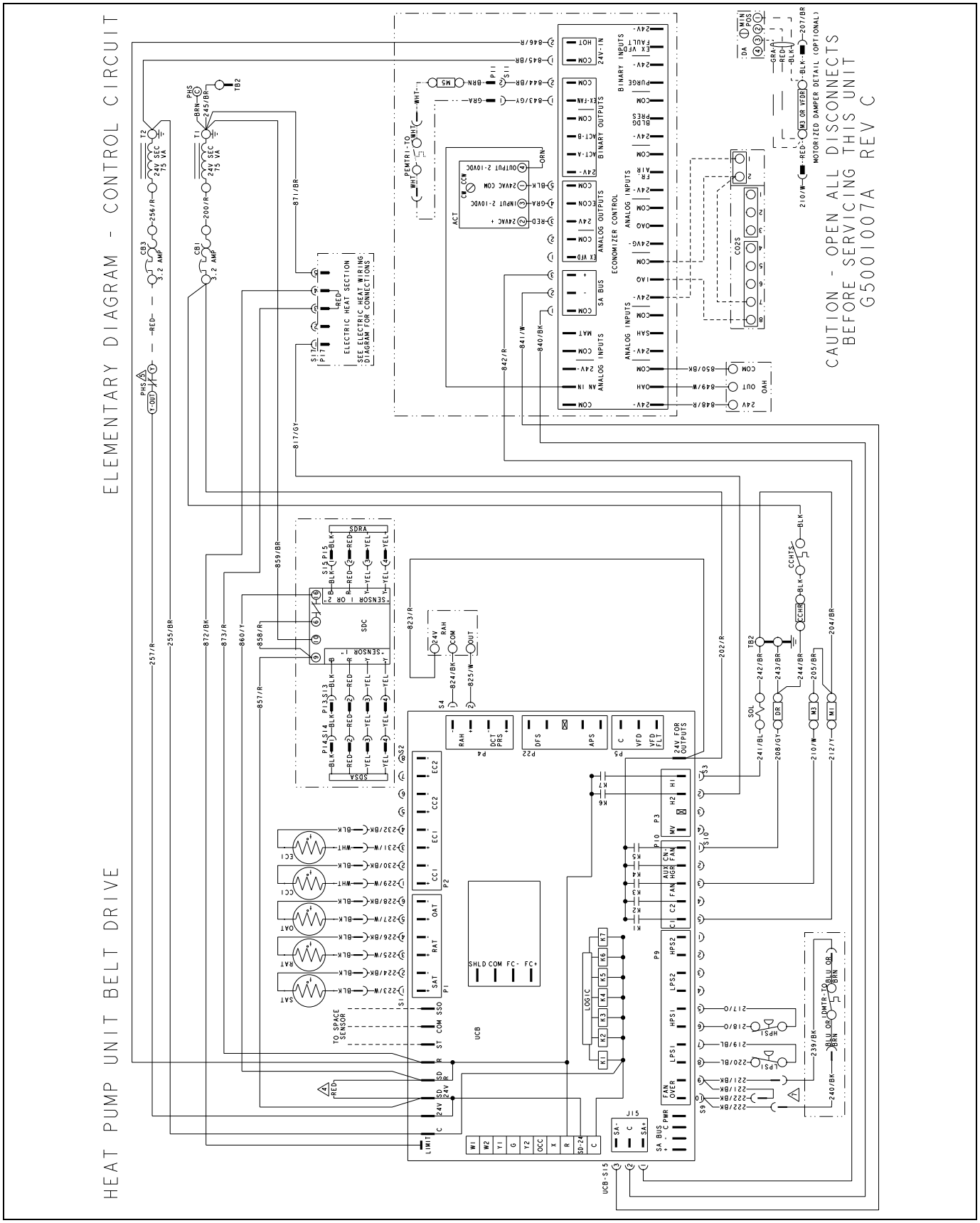

Typical XXEA7 Heat Pump Unit w/o heat 208/230, 460, 575-3-60 Belt Drive with VFD Elementary Diagram Power Circuit

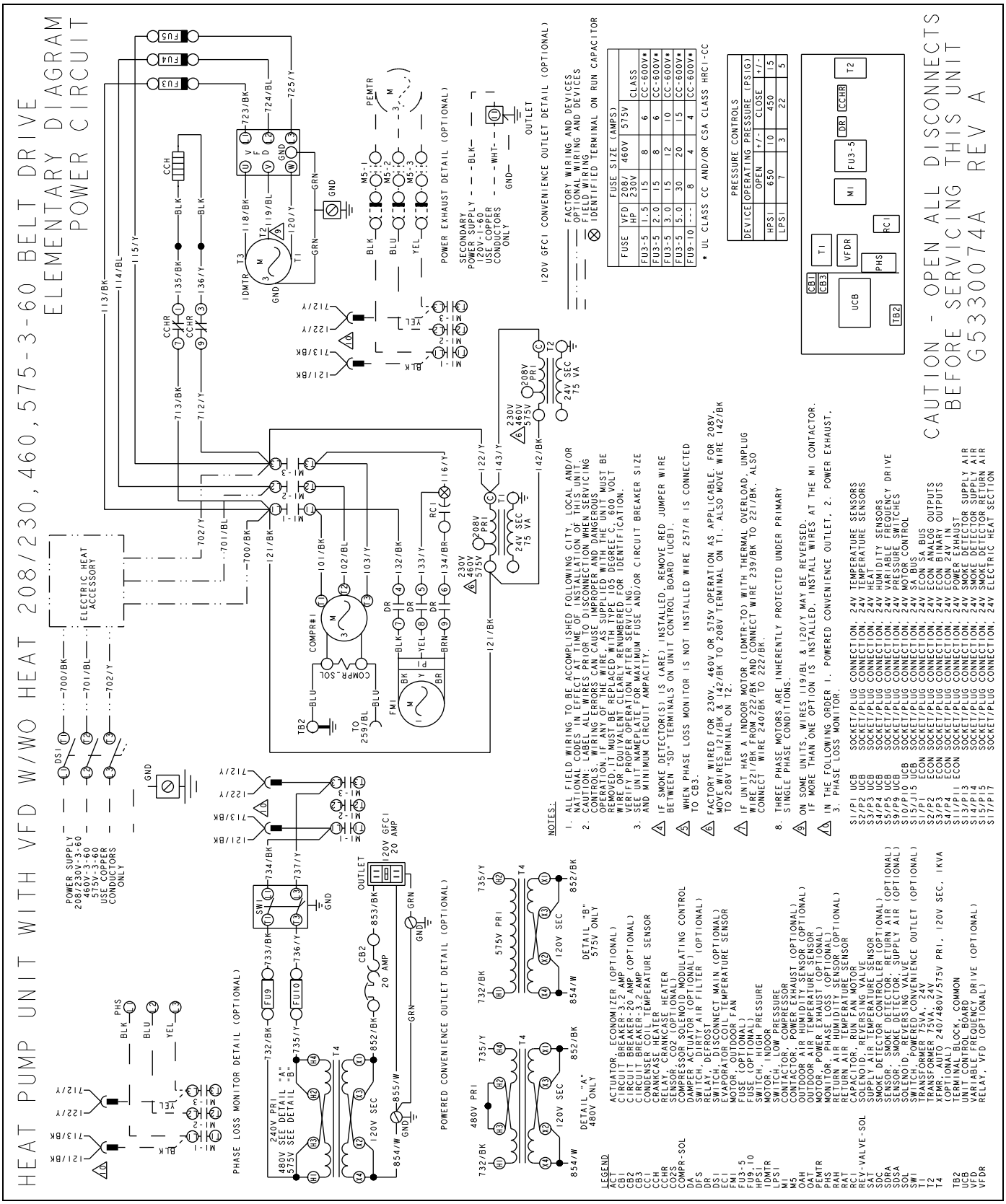

Typical FDD Elementary Wiring Diagram

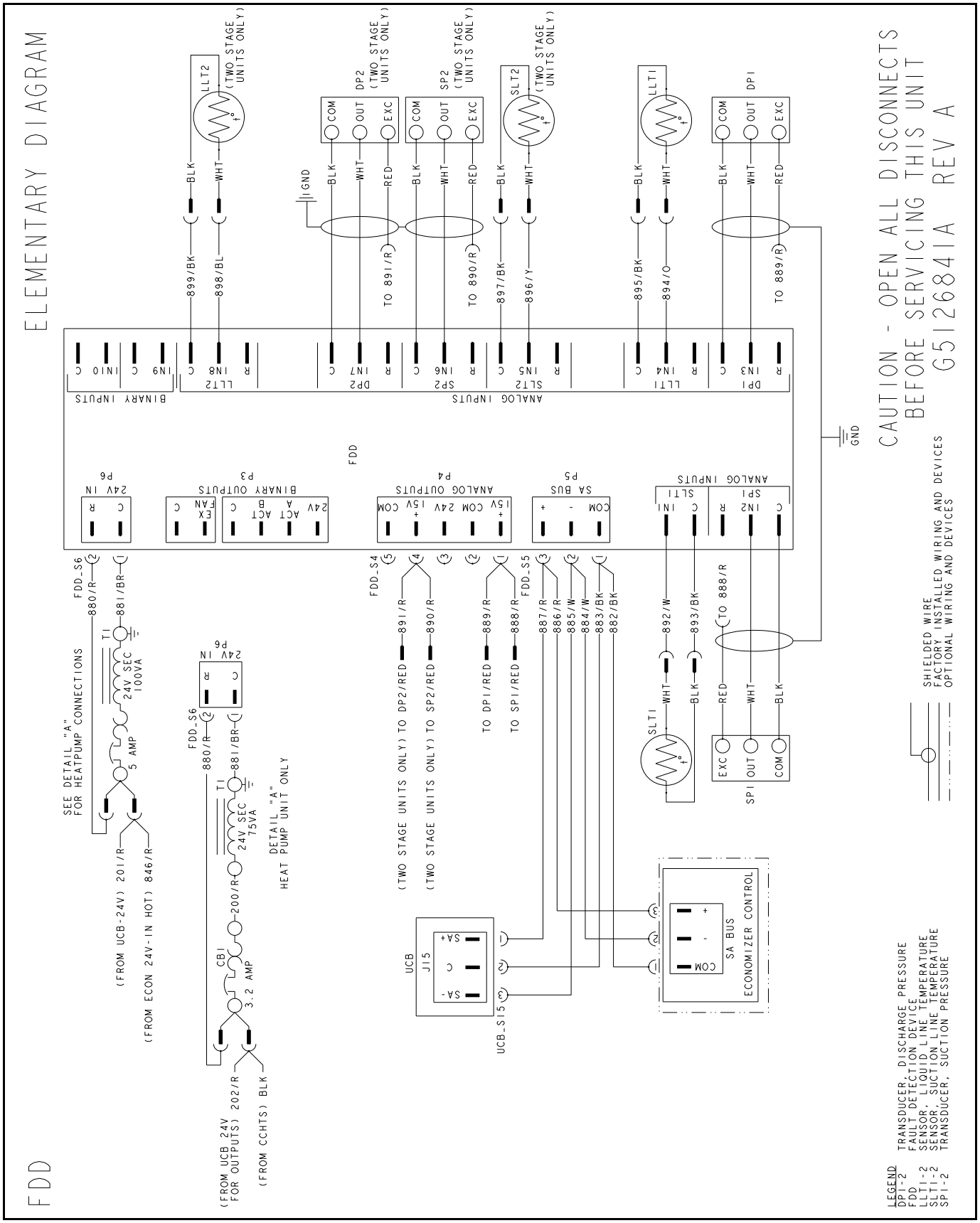

Typical XYE07 Heat Pump Unit w/o Heat 208/230, 460, 575-3-60 Belt Drive Elementary Diagram Power Circuit

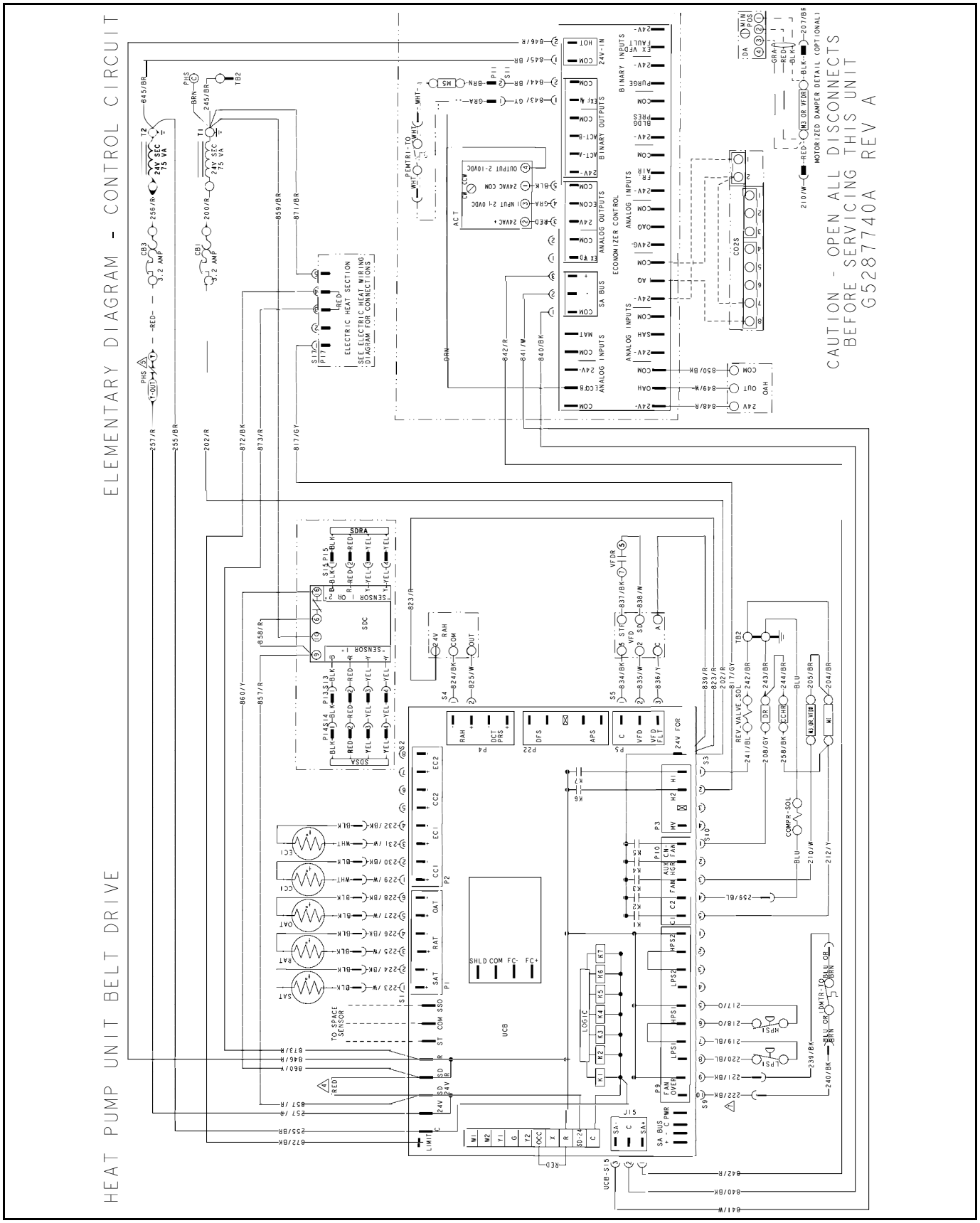

Typical XYE07 Heat Pump Unit w/o Heat 208/230, 460, 575-3-60 Belt Drive Elementary Diagram Power Circuit

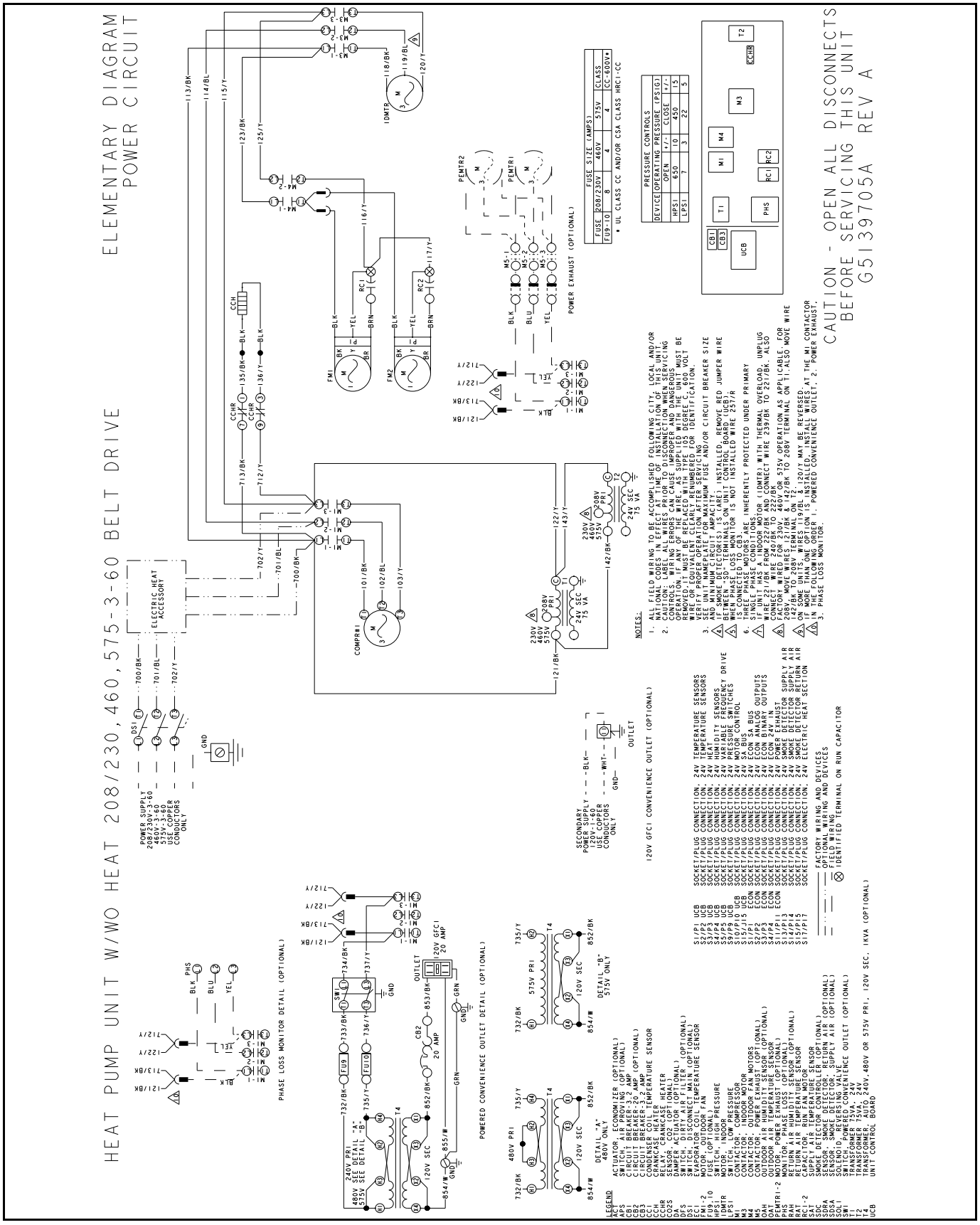

Typical XYE07 Heat Pump Unit Belt Drive Elementary Diagram Control Circuit

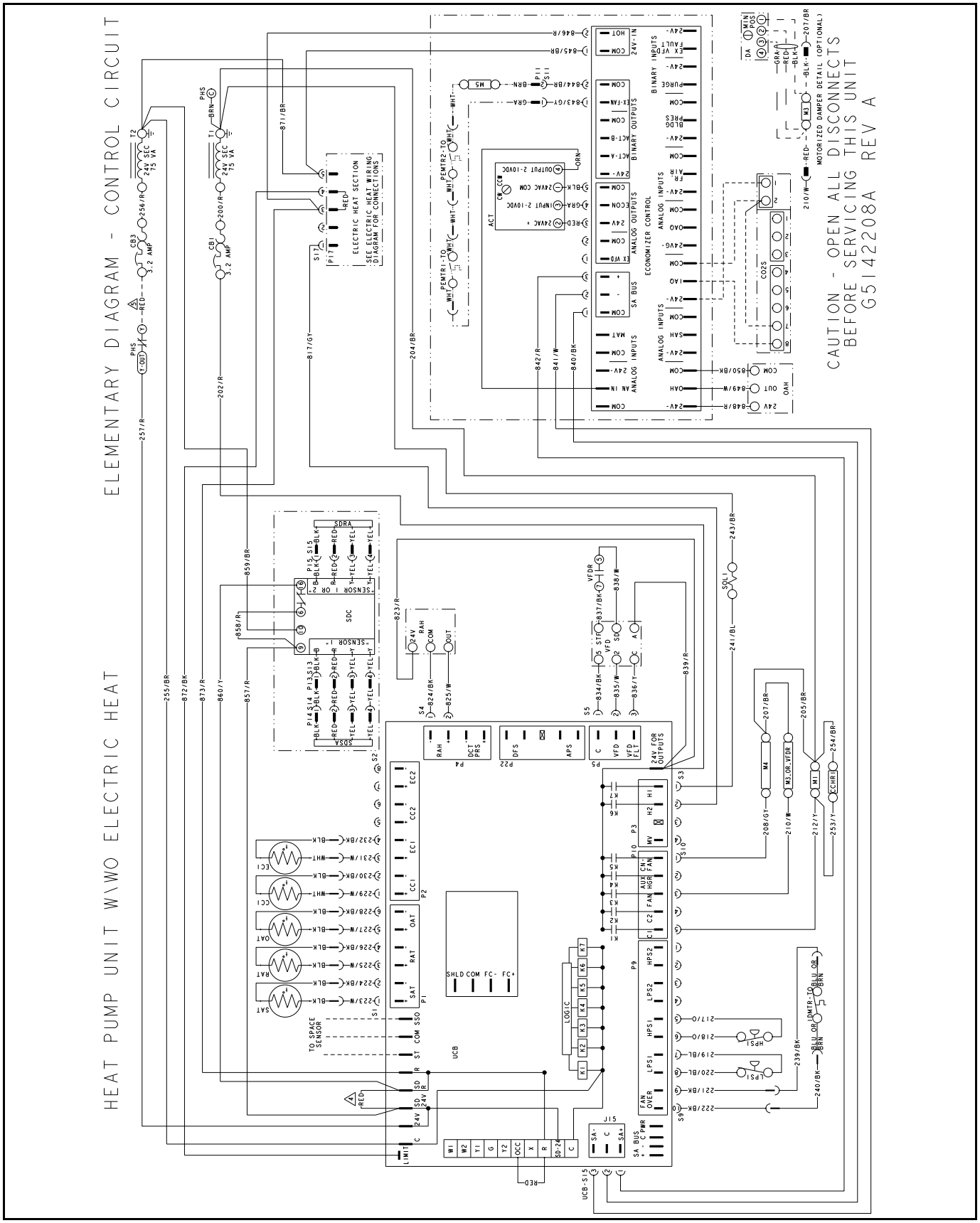

Typical XYEA7 Heat Pump Unit w/wo Electric Heat w/wo VFD 208/230-3-60, 460-3-60 Belt Drive - Elementary Diagram Power Circuit

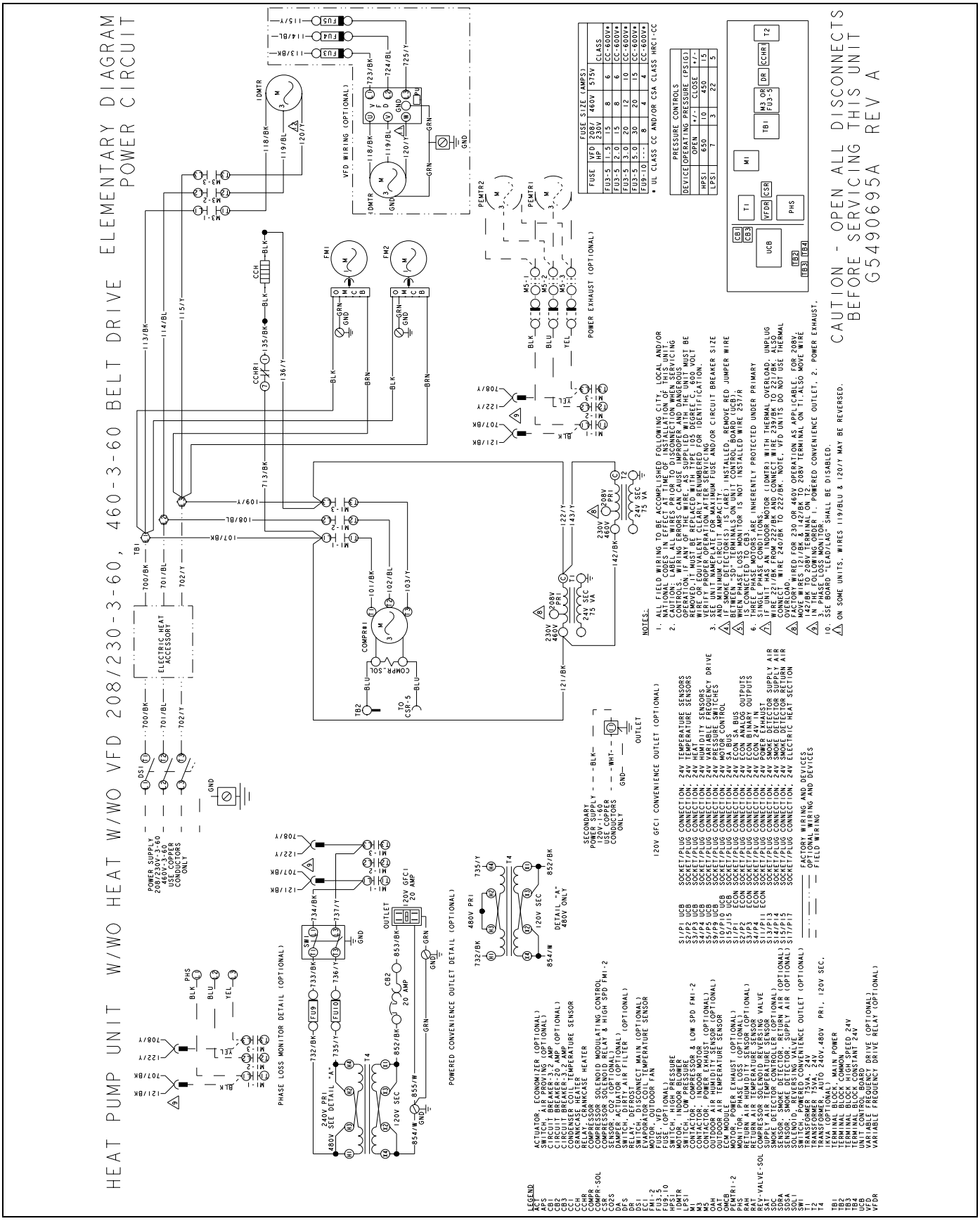

Typical XYEA7 Heat Pump Unit w/wo Electric Heat w/wo VFD 575v-3-60 Belt Drive - Elementary Diagram Power Circuit

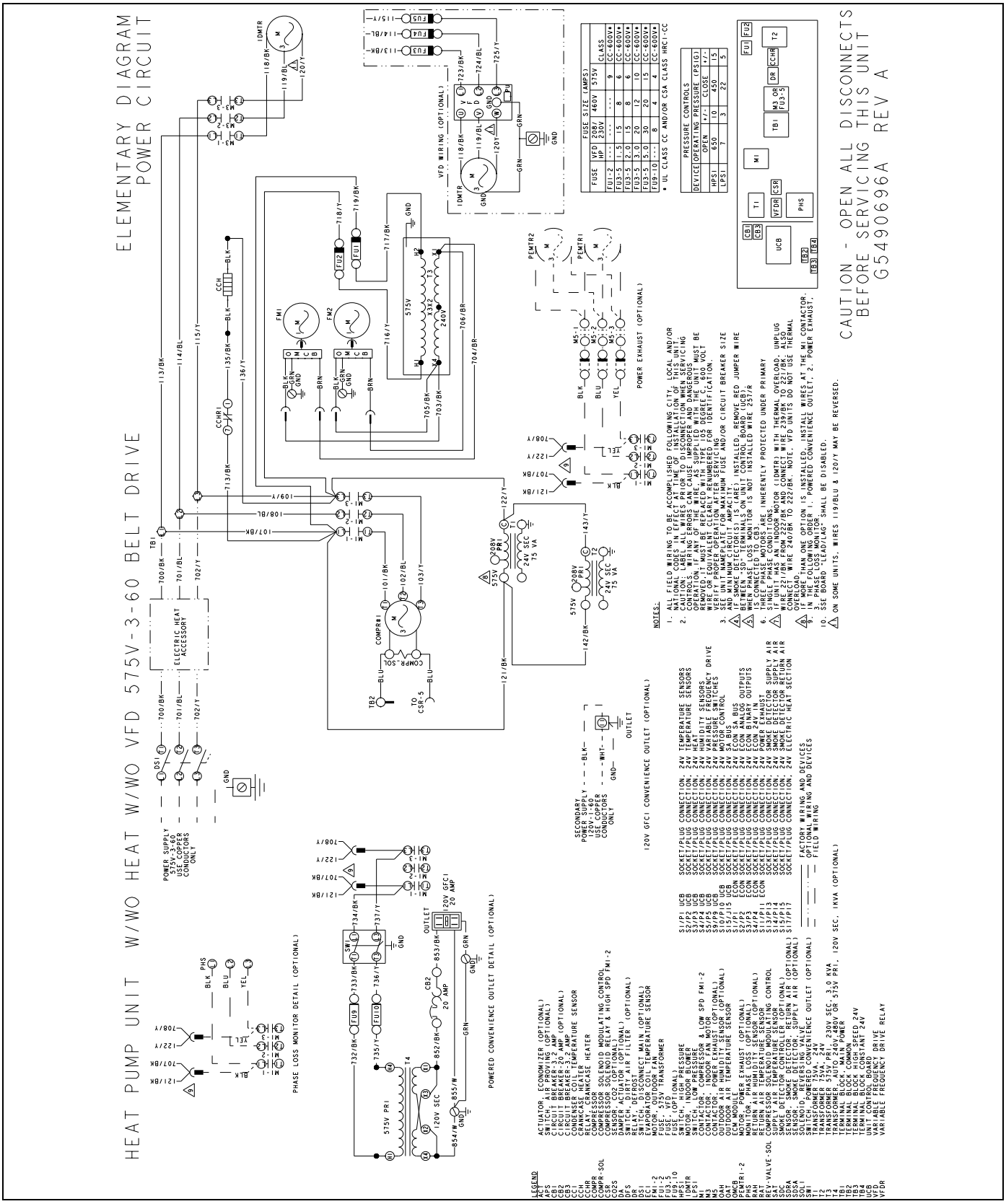

Typical XYEA7 Heat Pump Unit w/wo Electric Heat w/wo VFD - Elementary Diagram Control Circuit

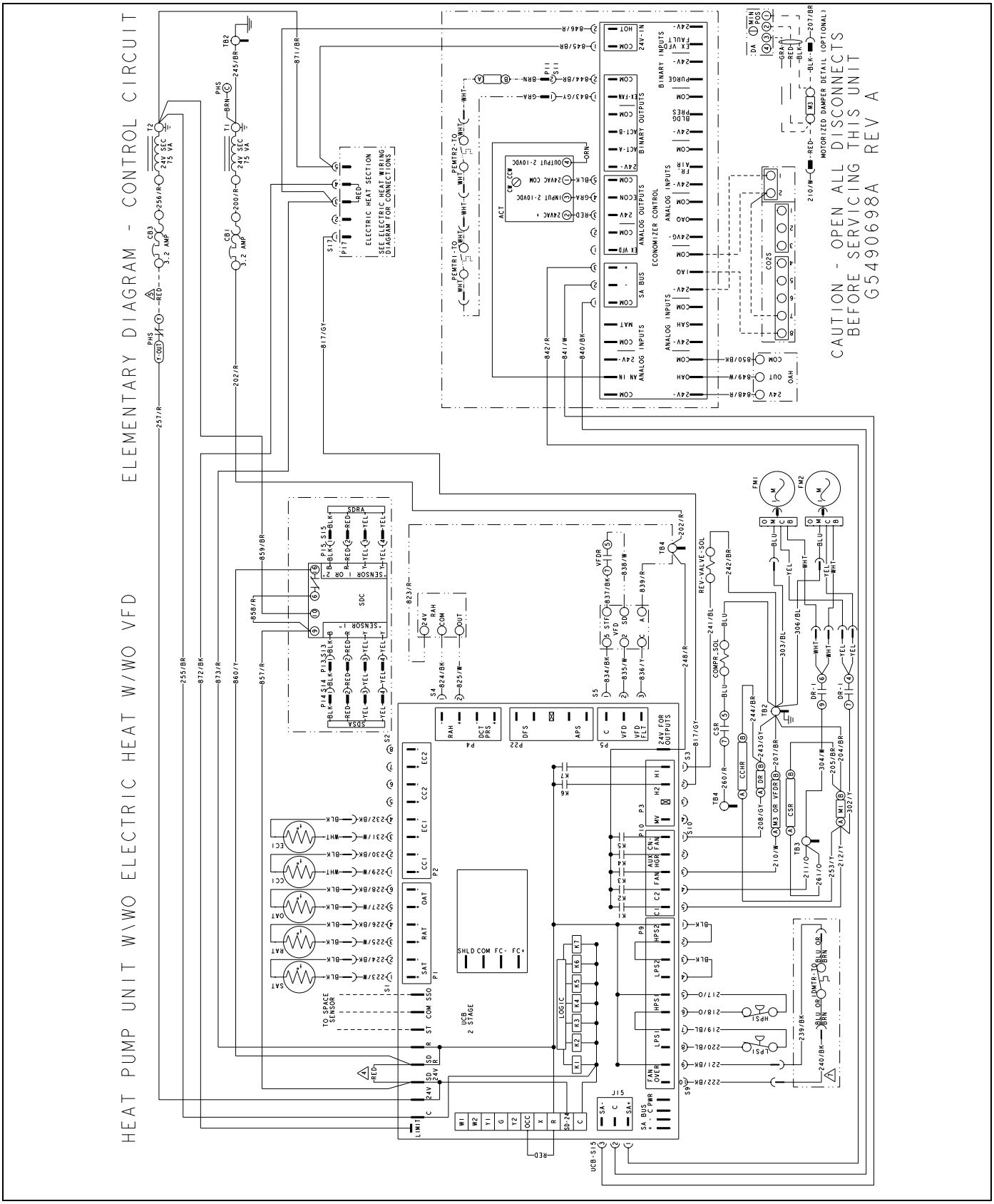

Typical XYE08-09, XXE08-12 Heat Pump Unit w/o Heat 208/230, 460, 575-3-60 Belt Drive Elementary Diagram Power Circuit

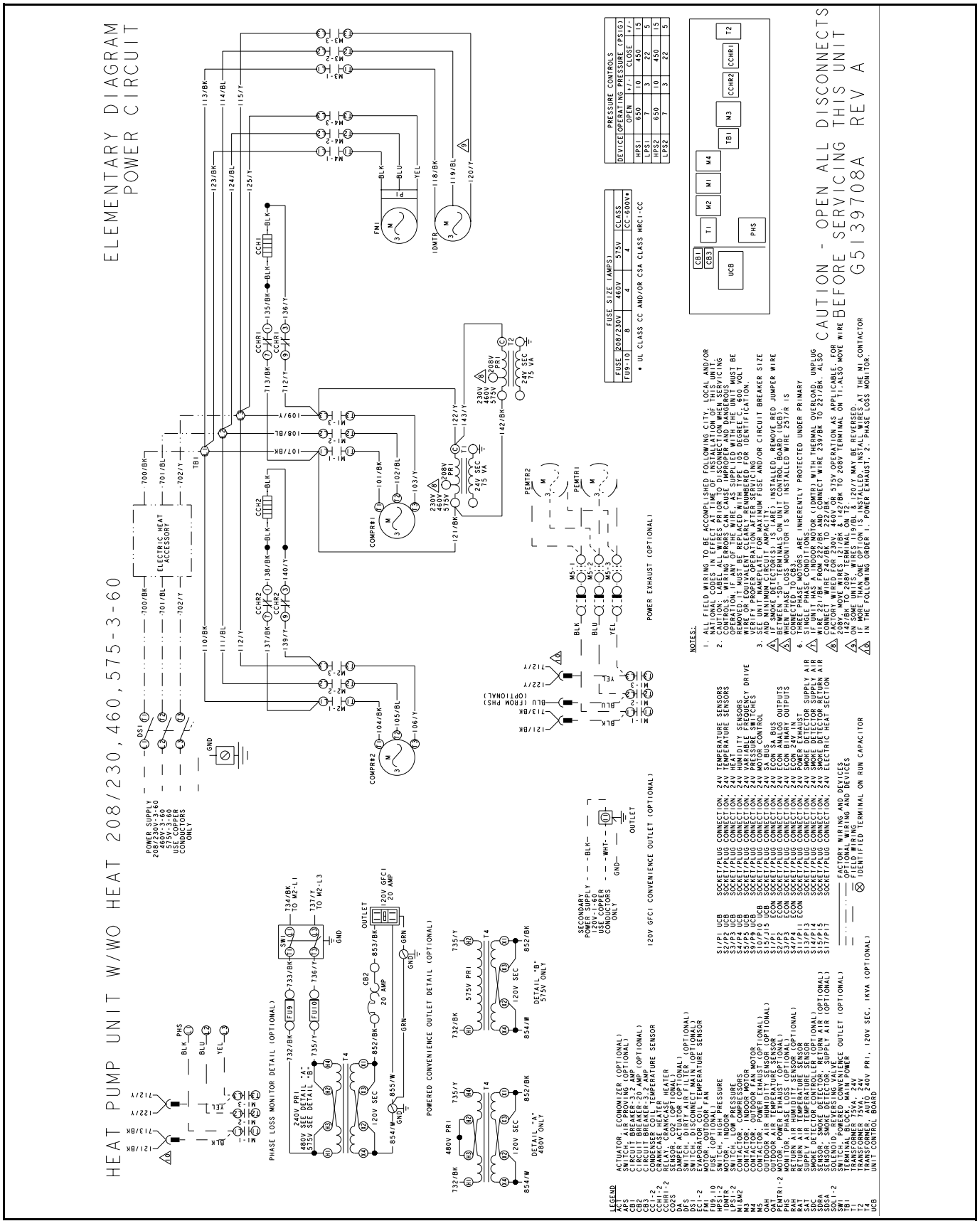

Typical XYE08-09, XXE08-12 Heat Pump Unit w/o Heat 208/230, 460, 575-3-60 Belt Drive with VFD Elementary Diagram Power Circuit

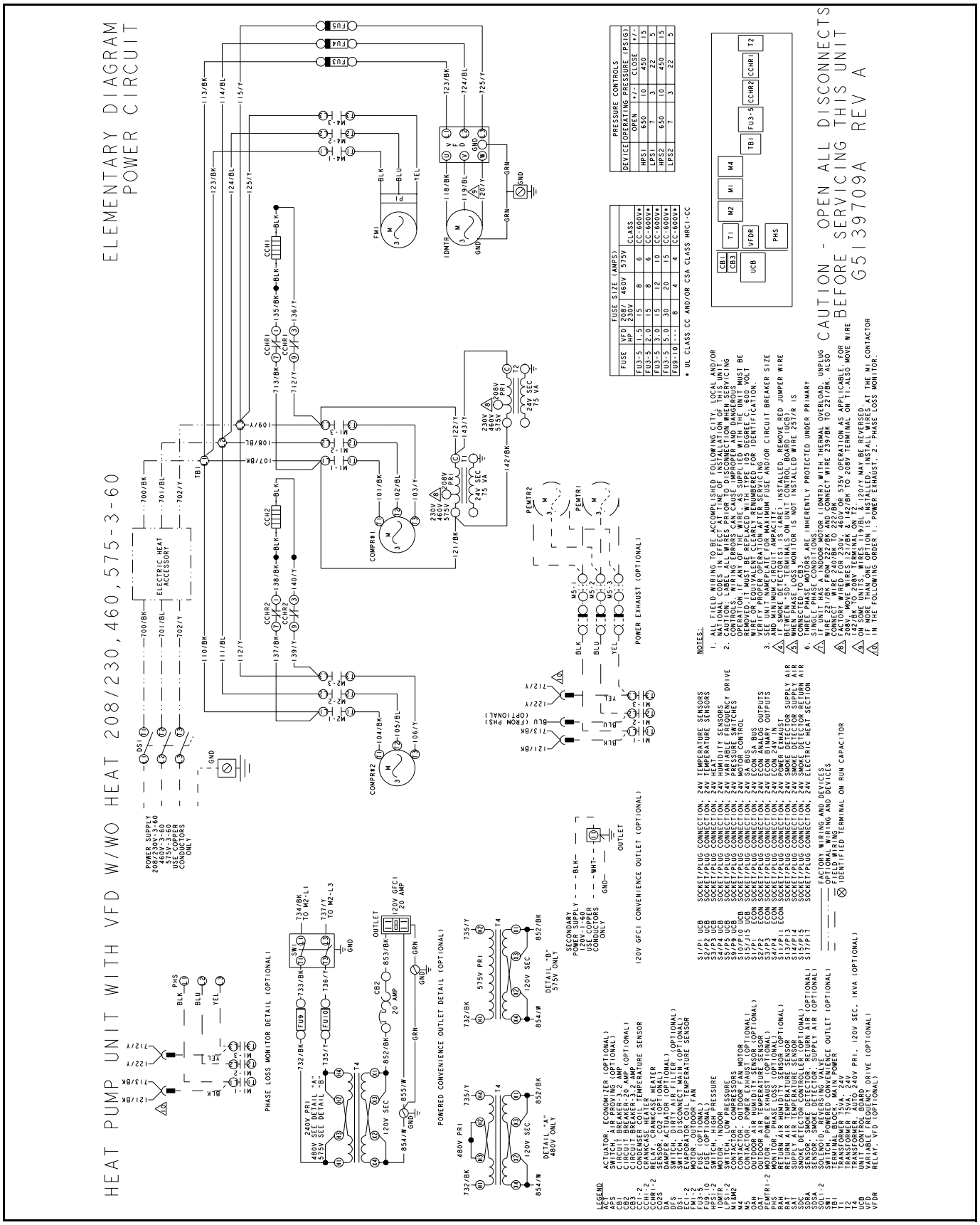

Typical XYE08-09, XXE08-12 Heat Pump Unit Belt Drive Elementary Diagram Control Circuit

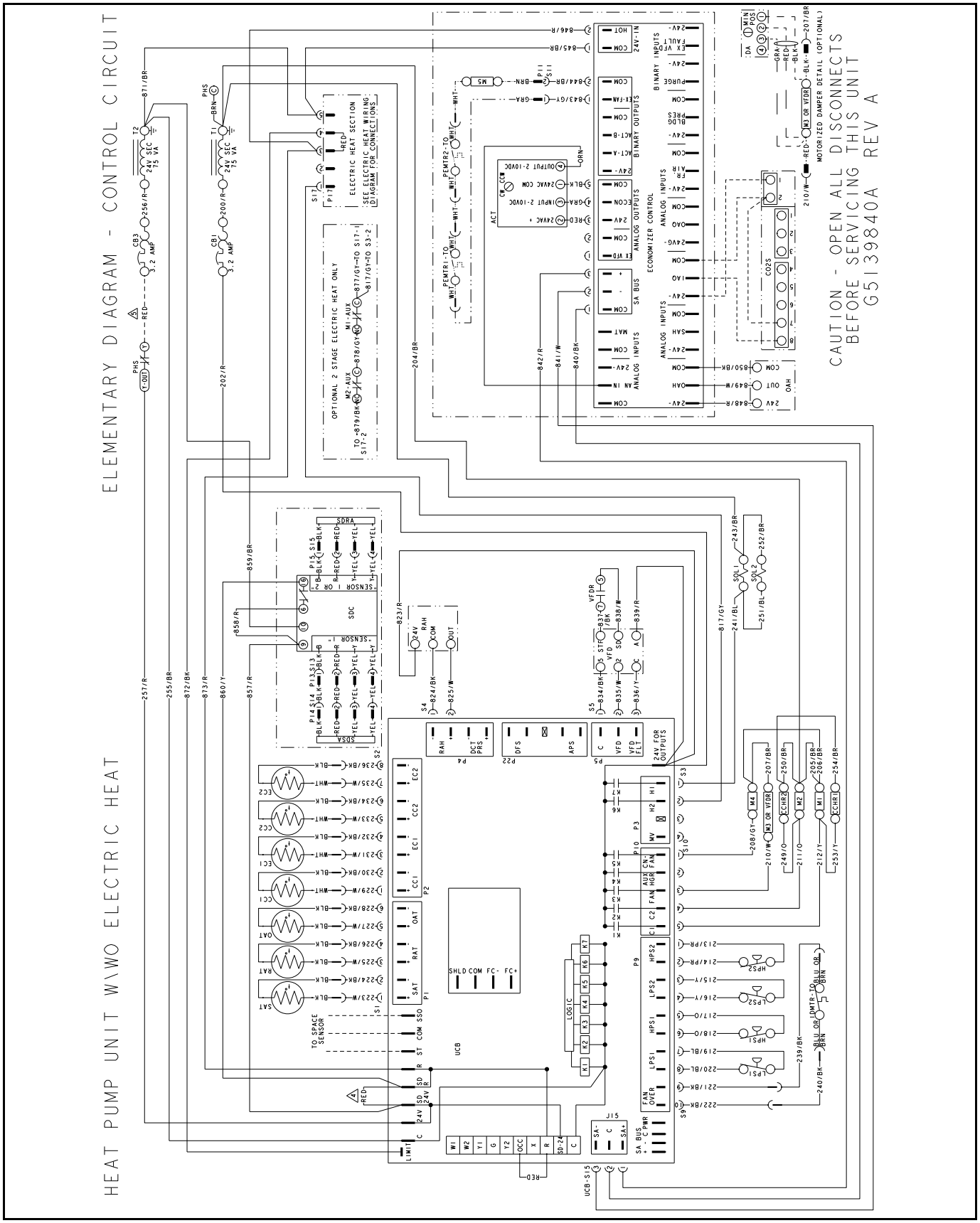

Weights and Dimensions

XYE04-09, XXEA7-12, XQE04-06 Unit Weights

Unit 4 Point Load Weight

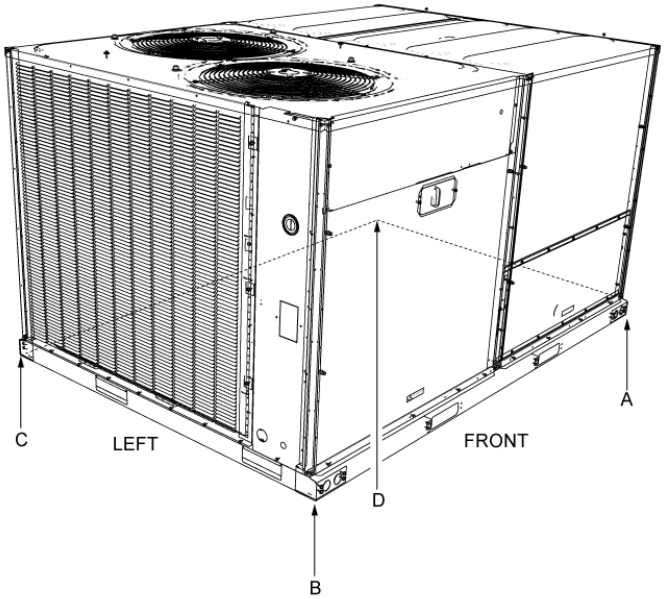

Unit 6 Point Load Weight

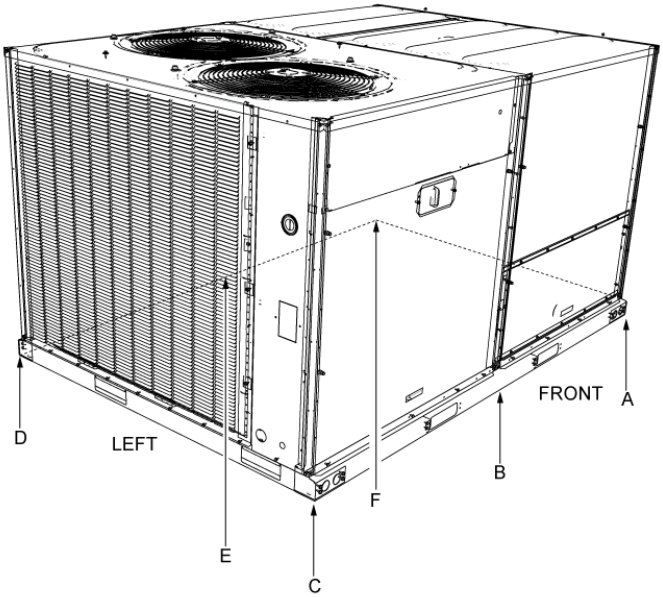

Unit Center Of Gravity

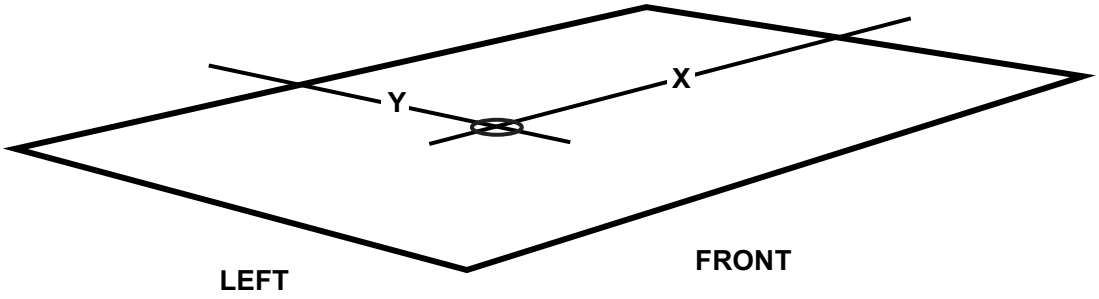

XYE04-09 Corner Weights

Model	Size (Tons)	Weight (lbs.)		Center of Gravity		4 Point Load Location (lbs.)				6 Point Load Location (lbs.)					
		Shipping	Operating	X	Y	A	B	C	D	A	B	C	D	E	F
XYE	04 (3)	563	535	37.4	24.2	130	133	138	135	86	88	89	92	91	89
XYE	05 (4)	643	614	38.1	25.1	151	161	155	146	100	104	109	105	100	96
XYE	06 (5)	682	653	37.4	23.1	151	155	176	171	100	102	104	118	116	114
XYE	07 (6)	891	861	45.6	34.7	231	253	197	180	152	161	171	133	125	118
XYE	A7 (6)	915	898	44.3	34.9	249	257	197	191	165	169	172	132	130	127
XYE	08 (7.5)	1090	1060	48.5	34.1	260	326	264	210	167	193	226	183	156	135
XYE	09 (8.5)	1091	1061	48.5	34.1	260	326	264	211	167	193	226	183	156	135

XXEA7-12 Corner Weights

Size (Tons)	Model	Weight (lbs.)		Center of Gravity		4 Point Load Location (lbs.)				6 Point Load Location (lbs.)					
		Shipping	Operating	X	Y	A	B	C	D	A	B	C	D	E	F
A7 (6)	XXE	665	652	35.8	23.9	163	153	163	173	110	105	101	107	112	117
08 (7.5)	XXE	1006	976	46.9	35.7	261	304	221	190	170	187	208	151	136	124
09 (8.5)	XXE	1055	1025	48.0	35.7	267	326	238	194	172	196	225	164	143	125
12 (10)	XXE	1090	1060	49.5	33.3	247	325	277	211	158	188	227	193	160	135

XQE04-06 Corner Weights

Size (Tons)	Model	Weight (lbs.)		Center of Gravity		4 point Load Location (lbs.)				6 point Load Location (lbs.)					
		Shipping	Operating	X	Y	A	B	C	D	A	B	C	D	E	F
04 (3)	XQE	542	529	38.0	24.4	127	135	137	130	84	87	91	92	89	86
05 (4)	XQE	641	628	35.0	24.5	164	148	150	166	111	104	97	98	105	113
06 (5)	XQE	640	627	34.7	24.4	165	146	149	168	112	103	95	97	105	114

XYE04-09, XYEA7, XXEA7-12, XQE04-06 Unit Accessory Weights

Unit Accessory	Weights (lbs.)
Vertical Flow Dry Bulb Economizer Small Footprint	63
Horizontal Flow Dry Bulb Economizer Small Footprint Short	96
Horizontal Flow Dry Bulb Economizer Small Footprint Short	75
Horizontal Flow Dry Bulb Economizer Small Footprint Tall	81
Horizontal Flow Dry Bulb Economizer Large Footprint Short	105
Horizontal Flow Dry Bulb Economizer Large Footprint Tall	102
Power Exhaust Vert Flow Small Footprint	38
Power Exhaust Vert Flow Large Footprint	38
Power Exhaust Horiz Flow Small Footprint	38
Power Exhaust Horiz Flow Large Footprint	38
Hail Guard Kit Small Short Factory Installed	19
Hail Guard Kit Small Tall Factory Installed	24
Hail Guard Kit Large Short Factory Installed	50
Hail Guard Kit Large Tall Factory Installed	50
Curb Rigid 14" Small Footprint	145
Curb Rigid 24" Small Footprint	135
Curb Rigid 14" Large Footprint	135
Curb Rigid 24" Large Footprint	135

XYE04-09, XQE04-06, XXEA7-12 Unit Dimensions

XYE/XQE04

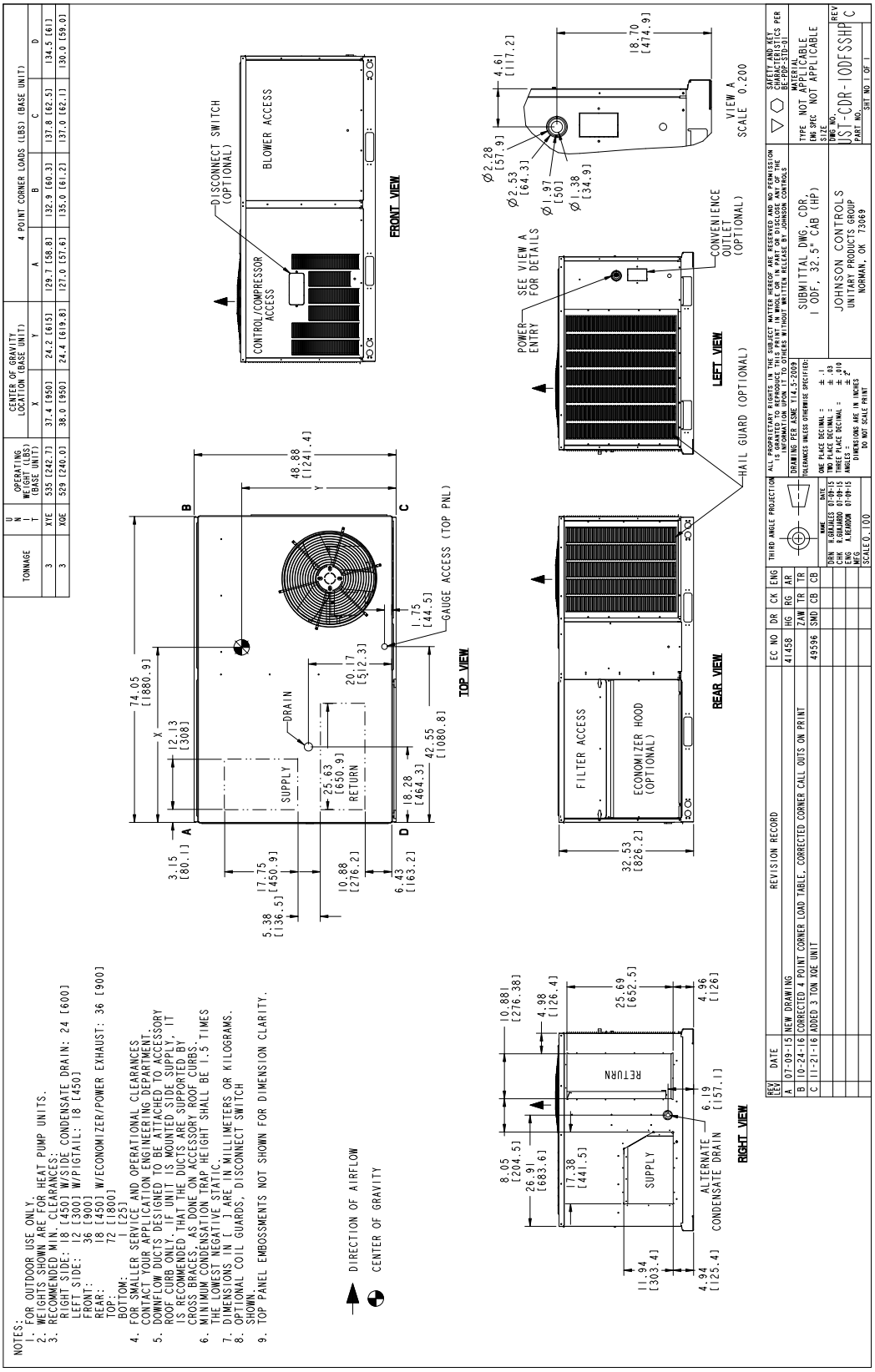

XYE/XQE05 - 06 And XXEA7

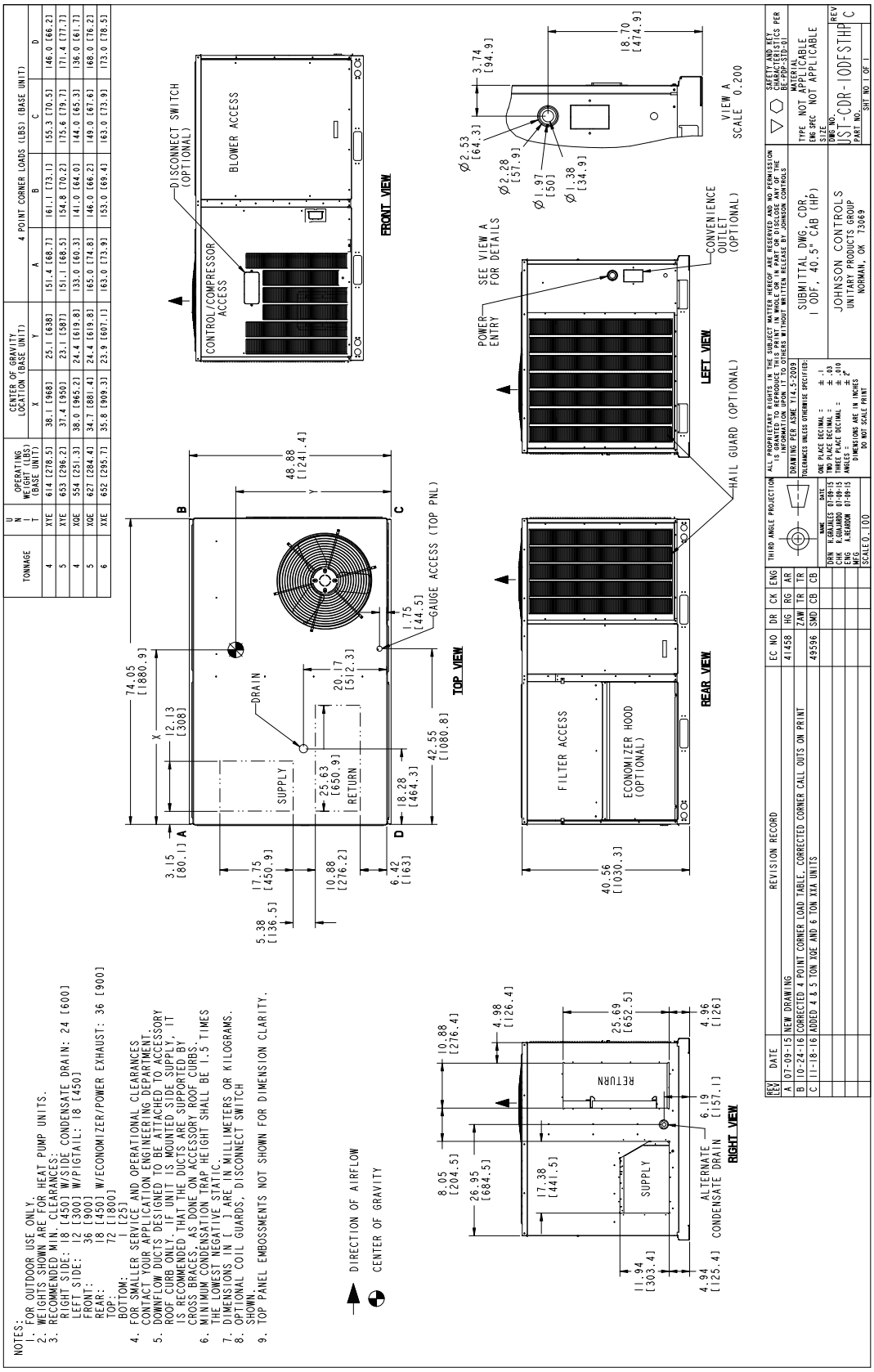

XYE07 and XYEA7

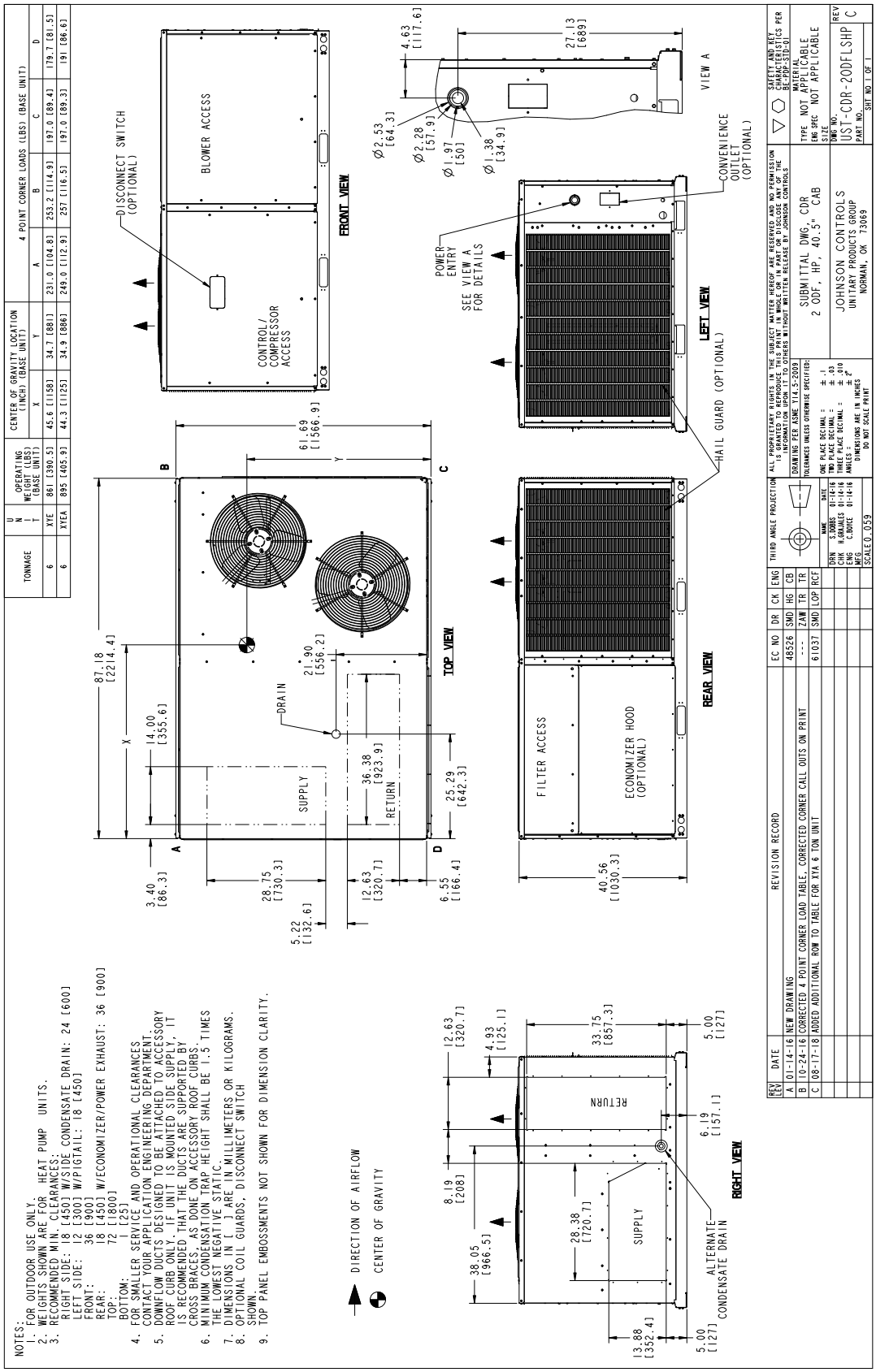

XXE08-09

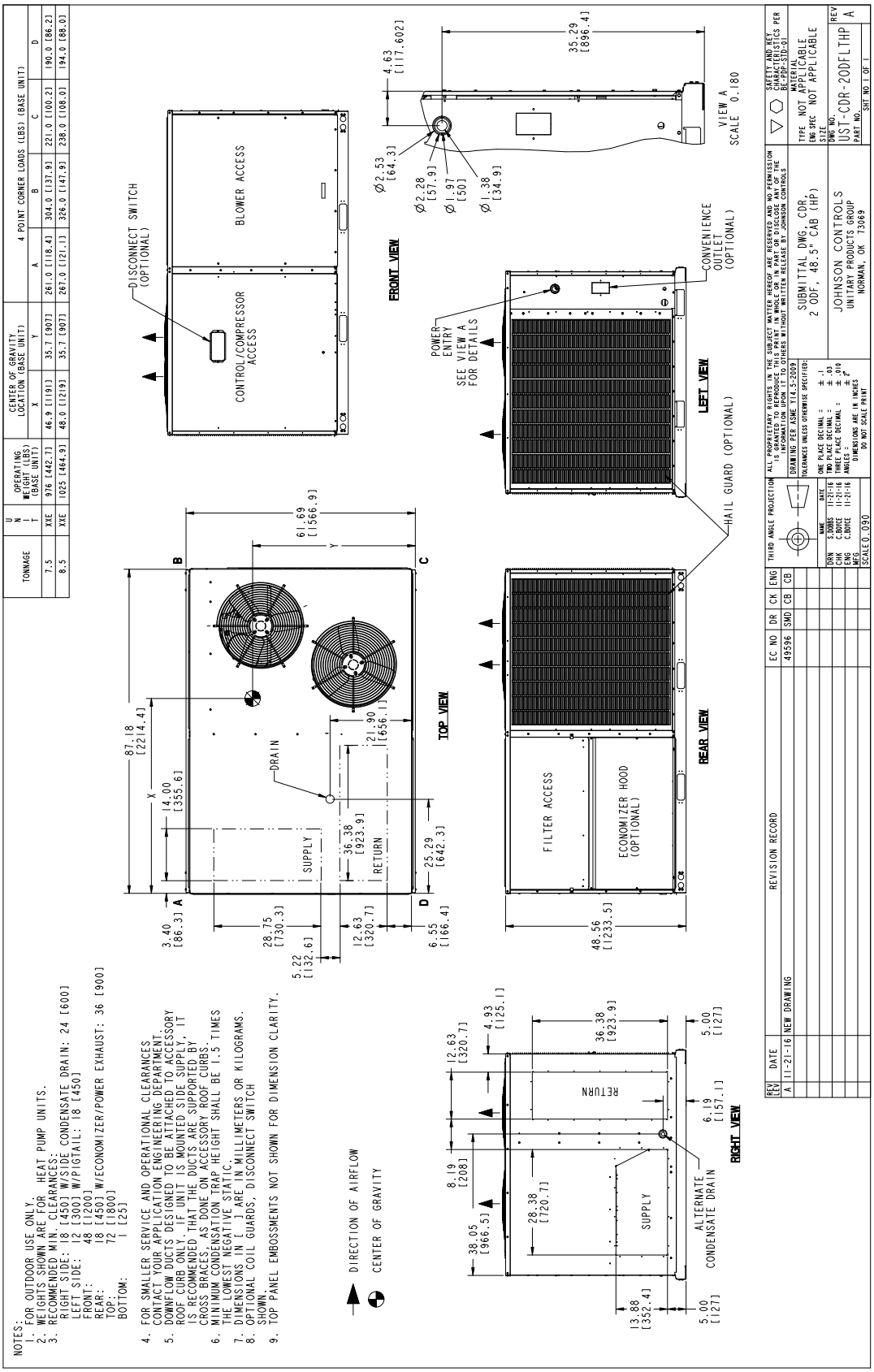
TONNAGE
UNIT
OPERATING WEIGHT (LBS) (BASE UNIT)
CENTER OF GRAVITY LOCATION (BASE UNIT)
4 POINT CORNER LOADS (LBS) (BASE UNIT)
7.5 XXE 976 [442.7] 46.9 [1191] 35.7 [907] 261.0 [118.4] 304.0 [137.9] 221.0 [100.2] 190.0 [86.2]
8.5 XXE 1025 [464.9] 48.0 [1219] 35.7 [907] 267.0 [121.1] 326.0 [147.9] 238.0 [108.0] 194.0 [88.0]
NOTES:
1. FOR OUTDOOR USE ONLY.
2. WEIGHTS SHOWN ARE FOR HEAT PUMP UNITS.
3. RECOMMENDED MIN. CLEARANCES:
RIGHT SIDE: 18 [450] W/SIDE CONDENSATE DRAIN: 24 [600]
LEFT SIDE: 12 [300] W/PIGTAIL: 18 [450]
FRONT: 48 [1200]
REAR: 18 [450] W/ECONOMIZER/POWER EXHAUST: 36 [900]
TOP: 72 [1800]
BOTTOM: 1 [25]
4. FOR SMALLER SERVICE AND OPERATIONAL CLEARANCES, CONTACT YOUR APPLICATION ENGINEERING DEPARTMENT.
5. DOWNFLOW DUCTS DESIGNED TO BE ATTACHED TO ACCESSORY ROOF CURB ONLY. IF UNIT IS MOUNTED SIDE SUPPLY, IT IS RECOMMENDED THAT THE DUCTS ARE SUPPORTED BY CROSS BRACES, AS DONE ON ACCESSORY ROOF CURBS.
6. MINIMUM CONDENSATION TRAP HEIGHT SHALL BE 1.5 TIMES THE LOWEST NEGATIVE STATIC.
7. DIMENSIONS IN [ ] ARE IN MILLIMETERS OR KILOGRAMS.
8. OPTIONAL COIL GUARDS, DISCONNECT SWITCH SHOWN.
9. TOP PANEL EMBOSSMENTS NOT SHOWN FOR DIMENSION CLARITY.
DIRECTION OF AIRFLOW
CENTER OF GRAVITY
DISCONNECT SWITCH (OPTIONAL)
CONTROL/COMPRESSOR ACCESS
BLOWER ACCESS
FRONT VIEW
VIEW A
SCALE 0.180
POWER ENTRY
SEE VIEW A FOR DETAILS
CONVENIENCE OUTLET (OPTIONAL)
LEFT VIEW
HAIL GUARD (OPTIONAL)
DRAIN
SUPPLY
RETURN
TOP VIEW
FILTER ACCESS
ECONOMIZER HOOD (OPTIONAL)
REAR VIEW
RETURN
SUPPLY
ALTERNATE CONDENSATE DRAIN
RIGHT VIEW
REVISION RECORD
REV LEV DATE
A 11-21-16 NEW DRAWING
EC NO DR CK ENG
49596 SND CB CB
THIRD ANGLE PROJECTION
DRAWING PER ASME Y14.5-2009
TOLERANCES UNLESS OTHERWISE SPECIFIED:
ONE PLACE DECIMAL = ± .1
TWO PLACE DECIMAL = ± .03
THREE PLACE DECIMAL = ± .010
ANGLES = ± 2°
DIMENSIONS ARE IN INCHES
DO NOT SCALE PRINT
SCALE 0.090
SUBMITTAL DWG, CDR, 2 ODF, 48.5" CAB (HP)
JOHNSON CONTROLS
UNITARY PRODUCTS GROUP
NORMAN, OK 73069
TYPE NOT APPLICABLE
MATERIAL NOT APPLICABLE
UST-CDR-20DFLTHP
SHT NO 1 OF 1
REV A

XYE08, 09 and XXE12

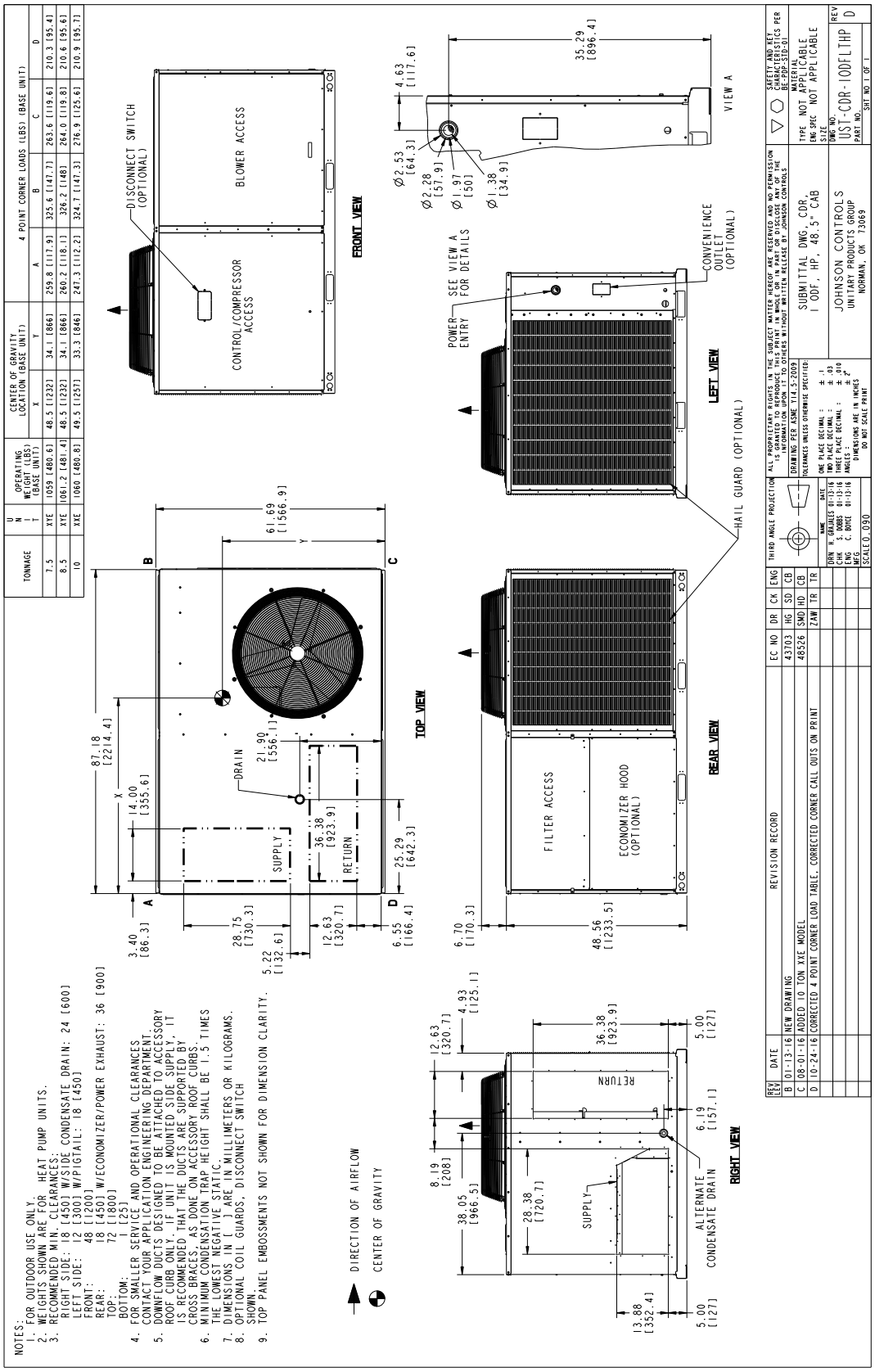

TONNAGE	UNIT	OPERATING WEIGHT (LBS) (BASE UNIT)	CENTER OF GRAVITY LOCATION (BASE UNIT) X	Y	4 POINT CORNER LOADS (LBS) (BASE UNIT) A	B	C	D
7.5	XYE	1059 [480.6]	48.5 [1232]	34.1 [866]	259.8 [117.9]	325.6 [147.7]	263.6 [119.6]	210.3 [95.4]
8.5	XYE	1061.2 [481.4]	48.5 [1232]	34.1 [866]	260.2 [118.1]	326.2 [148]	264.0 [119.8]	210.6 [95.6]
10	XXE	1060 [480.8]	49.5 [1257]	33.3 [846]	247.3 [112.2]	324.7 [147.3]	276.9 [125.6]	210.9 [95.7]

XYE04-06, XQE04-06, and XXEA7 Unit Clearances

Direction	Distance (in.)	Direction	Distance (in.)
Top[1]	72	Right	18
Front	36	Left	12
Rear	18[2]/36[3]	Bottom[4]	1

1. Units must be installed outdoors. Over hanging structure or shrubs should not obscure condenser air discharge outlet.
2. Units without economizer or power exhaust.
3. Units equipped with an Economizer or Power Exhaust. Flue products must not be discharged within 10 Feet of the rear of the unit.
4. Units may be installed on combustible floors made from wood or class A, B or C roof covering materials.

XYE04-06, XXEA7, XQE04-06 Unit Roof Curb Dimensions

1RC0456, 1RC0458 Roof Curb Dimensions

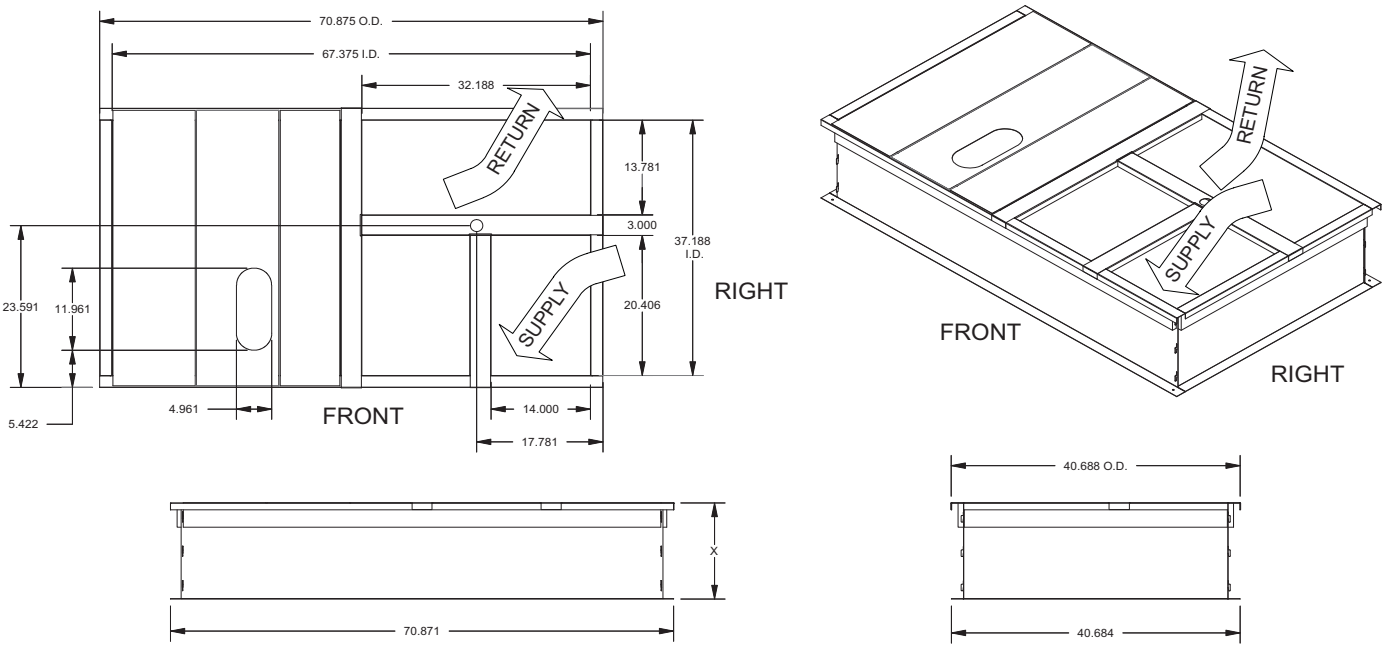

1RC0456 X= 14" Height
1RC0458 X= 24" Height

Notes:
1. Sides, ends and cross support are 18-G90. Deck pans, R/A & S/A supports are 20-G90.
2. Full perimeter wood nailer.
3. Insulated deck pans.

Unit Models used with 1RC0456, 1RC0458 Roof Curb

XYE/XQE04
XYE/XQE05
XYE/XQE06/XXEA7

NOTE: If utilities are required thru the base of the unit or thru the roof curb the following field installed accessories can be purchased thru your dealer or contractor:

1TB0401 - Thru the base electrical

1TB0402 - Thru the base electrical

1TB0403 - Thru the base electrical

1TB0404 - Thru the base electrical

XYE07/A7-09 and XXE08-12 Unit Clearances

Direction	Distance (in.)	Direction	Distance (in.)
Top[1]	72	Right	18
Front	48	Left	12
Rear	18[2]/36[3]	Bottom[4]	1

1. Units must be installed outdoors. Over hanging structure or shrubs should not obscure condenser air discharge outlet.
2. Units without economizer or power exhaust.
3. Units equipped with an Economizer or Power Exhaust. Flue products must not be discharged within 10 Feet of the rear of the unit.
4. Units may be installed on combustible floors made from wood or class A, B or C roof covering materials.

XYE07-09, XXE08-09 and XXE12 Unit Roof Curb Dimensions

1RC0457, 1RC0459 Roof Curb Dimensions

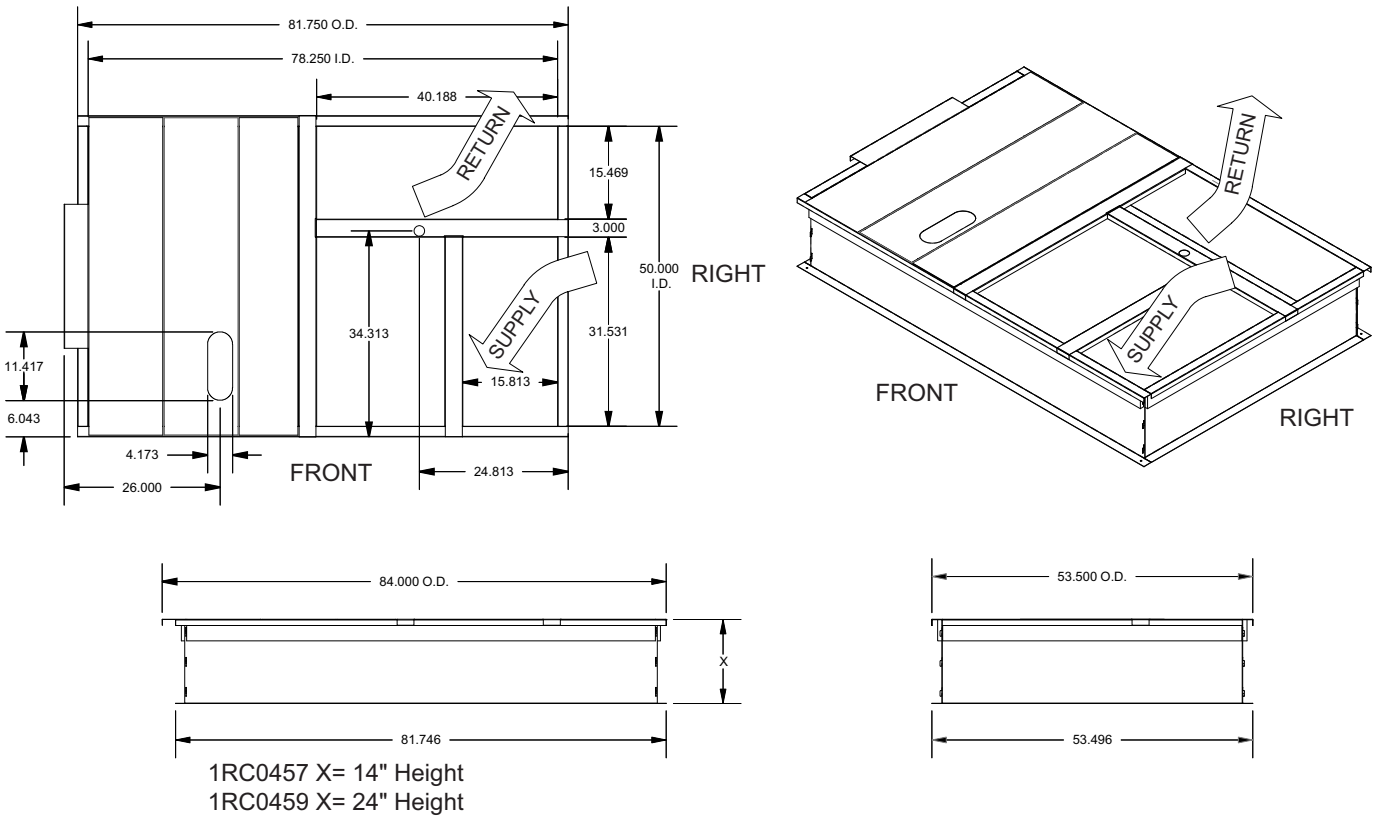

1RC0457 X= 14" Height
1RC0459 X= 24" Height

Notes:
1. Sides, ends, unit locator and cross support are 18-G90. Deck pans, R/A & S/A supports are 20-G90.
2. Full perimeter wood nailer.
3. Insulated deck pans.

Unit Models used with 1RC0457, 1RC0459 Roof Curb

XYE07/XYEA7
XYE08/XXE08
XYE09/XXE09
XXE12

NOTE: If utilities are required thru the base of the unit or thru the roof curb the following field installed accessories can be purchased thru your dealer or contractor:

1TB0404 - Thru the base electrical

Economizer Options

Economizer Usage

Application	Description	Accessory Kit Number
Economizer Vertical Flow	Econ, DB, Vertical Flow, Small Footprint	2EE04706724
	Econ, DB, Vertical Flow, Large Footprint	2EE04706824
Economizer Horizontal Flow	Econ, DB, Horizontal Flow, Small Footprint, Short Cabinet	2EE04707024
	Econ, DB, Horizontal Flow, Small Footprint, Tall Cabinet	2EE04707124
	Econ, DB, Horizontal Flow, Large Footprint, Short Cabinet	2EE04707224
	Econ, DB, Horizontal Flow, Large Footprint, Tall Cabinet	2EE04707324
Power Exhaust Vertical Flow	Power Exhaust Vert Flow Small Footprint 208V-230V 1-ph	2PE04704206
	Power Exhaust Vert Flow Small Footprint 208V-230V 3-ph	2PE04704225
	Power Exhaust Vert Flow Small Footprint 460V 3-ph	2PE04704246
	Power Exhaust Vert Flow Small Footprint 575V 3-ph	2PE04704258
	Power Exhaust Vert Flow Large Footprint 208V-230V 1-ph	2PE04704306
	Power Exhaust Vert Flow Large Footprint 208V-230V 3-ph	2PE04704325
	Power Exhaust Vert Flow Large Footprint 460V 3-ph	2PE04704346
	Power Exhaust Vert Flow Large Footprint 575V 3-ph	2PE04704358
Power Exhaust Horizontal Flow	Power Exhaust Horiz Flow Small Footprint 208V-230V 1-ph	2PE04704406
	Power Exhaust Horiz Flow Small Footprint 208V-230V 3-ph	2PE04704425
	Power Exhaust Horiz Flow Small Footprint 460V 3-ph	2PE04704446
	Power Exhaust Horiz Flow Small Footprint 575V 3-ph	2PE04704458
	Power Exhaust Horiz Flow Large Footprint 208V-230V 1-ph	2PE04704506
	Power Exhaust Horiz Flow Large Footprint 208V-230V 3-ph	2PE04704525
	Power Exhaust Horiz Flow Large Footprint 460V 3-ph	2PE04704546
	Power Exhaust Horiz Flow Large Footprint 575V 3-ph	2PE04704558

Field Installed Vertical Flow Economizer

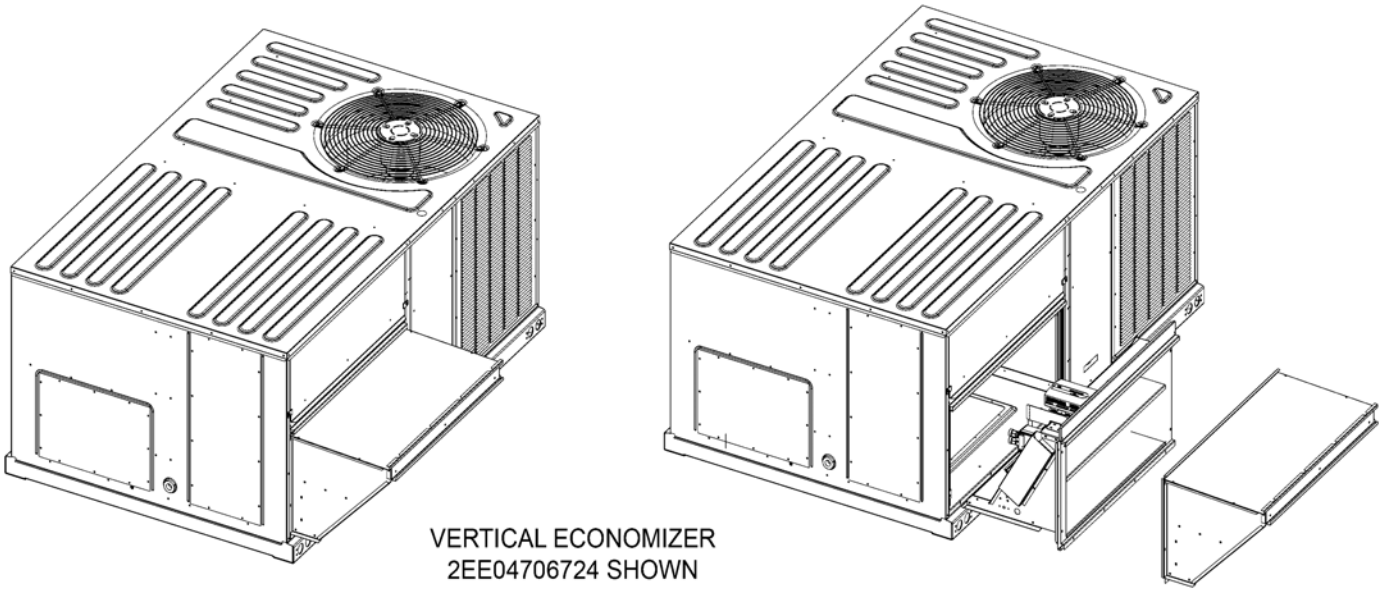

Field Installed Vertical Flow Economizer W/Power Exhaust

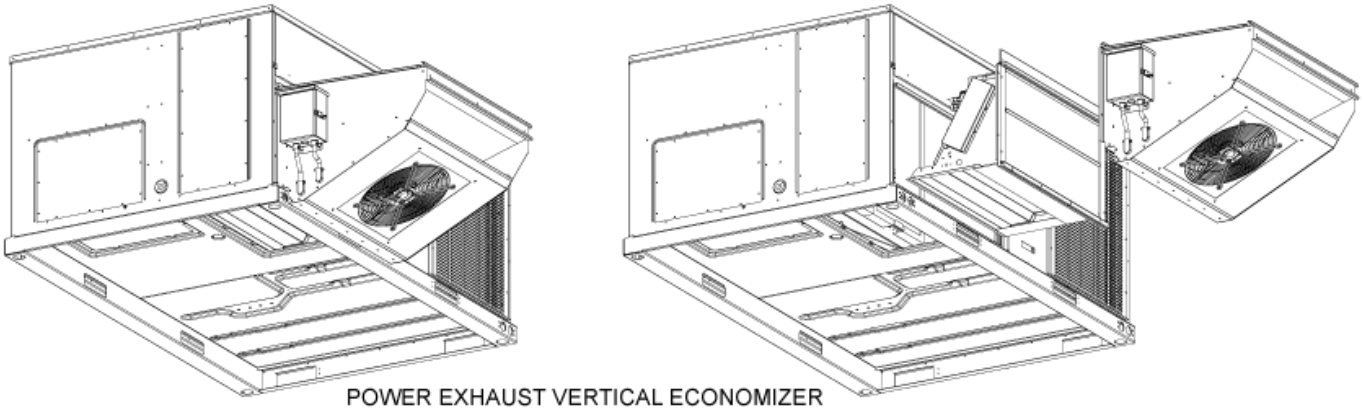

POWER EXHAUST VERTICAL ECONOMIZER
2PE04704206 SHOWN

Field Installed Horizontal Flow Economizer

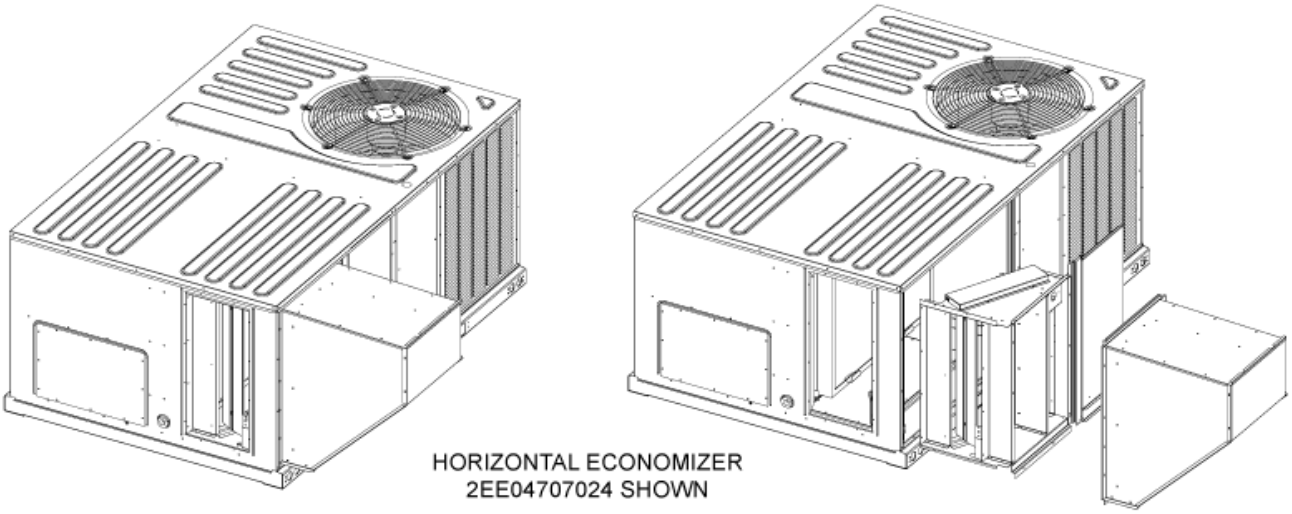

HORIZONTAL ECONOMIZER
2EE04707024 SHOWN

Field Installed Horizontal Flow Economizer W/Power Exhaust

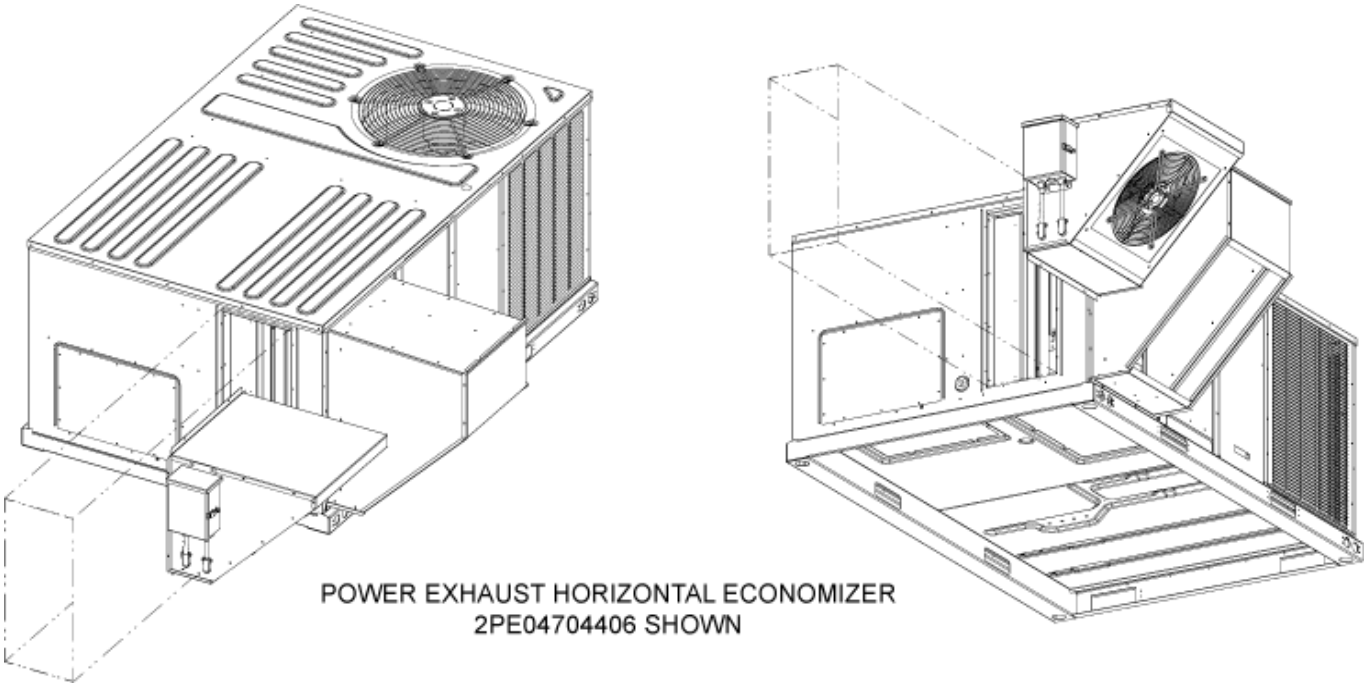

Guide Specifications

TEMPMASTER® GUIDE MECHANICAL SPECIFICATIONS
SINGLE PACKAGE HEAT PUMPS

3 THRU 10 NOMINAL TONS

Tempmaster® Omni™ Core SERIES

Size Range:3 to 10 Tons Nominal Cooling

Model Series: XYE/XXE/XQE

DIVISION 23 – HEATING, VENTILATING, AND AIR-CONDITIONING (HVAC)

Number **Title**

23 00 00 HEATING, VENTILATING, AND AIR-CONDITIONING (HVAC)

23 06 00 Schedules for HVAC
23 06 80 Schedules for Decentralized HVAC Equipment

23 06 80.13 Decentralized Unitary HVAC Equipment Schedule
23 06 80.13.A. Rooftop unit schedule

23 07 00 HVAC Insulation

23 07 16 HVAC Equipment Insulation

23 07 16.13 Decentralized, Rooftop Units:
23 07 16.13.A. Evaporator fan compartment:
1. Interior cabinet surfaces shall be insulated with a minimum 1/2- in. thick, minimum 1 1/2 lb density, flexible fiberglass insulation coated on the air side.
2. Insulation and adhesive shall meet NFPA 90A requirements for flame spread and smoke generation.

23 07 16.13.B. Gas heat compartment:
1. Aluminum foil- faced fiberglass insulation shall be used.
2. Insulation and adhesive shall meet NFPA 90A requirements for flame spread and smoke generation.

23 09 00 Instrumentation and Control for HVAC

23 09 13 Instrumentation and Control Devices for HVAC

23 09 13.23 Sensors and Transmitters

23 09 13.23.A. Thermostats

1. Thermostat must
   a. energize “G” when calling for fan only or continuous fan.
   b. have capability to energize 2 different stages of cooling, and 2 different stages of heating.
   c. include capability for occupancy scheduling.

23 09 23 Direct- digital Control system for HVAC

23 09 23.13 Decentralized, Rooftop Units:

23 09 23.13.A. Smart Equipment™ (Unit based microprocessor control)

1. Shall be ASHRAE 62 compliant.
2. Shall include an integrated economizer controller to support an economizer with 2 to 10 v DC actuator input.
3. Controller shall accept the following inputs: space temperature, setpoint adjustment, outdoor air temperature, indoor air quality, outdoor air quality, indoor relative humidity, compressor lockout, fire shutdown, enthalpy, fan status, remote time clock/door switch.
4. Shall accept a CO2 sensor in the conditioned space, and be Demand Control Ventilation ready.
5. Unit shall provide surge protection for the controller through a circuit breaker.
6. Shall have an LED display independently showing the status of activity on the communication bus, and processor operation.
7. Software upgrades will be accomplished by local download. Software upgrades through chip replacements are not allowed.

A. Unit shall be complete with self-contained low-voltage control circuit protected by a resettable circuit breaker on the 24-volt transformer side.

B. Unit shall incorporate a lockout circuit which provides reset capability at the space thermostat or base unit should any of the following standard safety devices trip and shut off compressor:

C. Loss-of-charge/Low-pressure switch.

D. High-pressure switch.

E. Freeze-protection temperature sensor, evaporator coil. If any of the above safety devices trip, an LED (light-emitting diode) indicator shall flash a diagnostic code that indicates which safety switch has tripped.

F. Unit shall incorporate “AUTO RESET” compressor over temperature, over current protection.

G. Unit shall operate with conventional thermostat designs and have a low voltage terminal strip for easy hook-up.

H. Unit control board shall have on-board diagnostics and fault code display.

I. Standard controls shall include anti-short cycle and low voltage protection, and permit cooling operation down to 45 ºF.

J. Control board shall monitor each refrigerant safety switch independently.

K. Control board shall retain last 5 fault codes in non-volatile memory, which will not be lost in the event of a power loss.

23 09 23.13.B. RTU Open - multi- protocol, direct digital controller:

1. Shall be ASHRAE 62 compliant.
2. Shall include built- in protocol for BACNET , Modbus , and Johnson N2.
3. Shall allow access of up to 62 network variables (SNVT). Shall be compatible with all open controllers
4. Baud rate Controller baud rate setting shall be selected in the Smart Equipment control.
5. Shall have an LED display independently showing the status of serial communication, running, errors, power, all digital outputs, and all analog inputs.

6. Shall accept the following inputs: space temperature, setpoint adjustment, outdoor air temperature, indoor air quality, outdoor air quality, compressor lock- out, fire shutdown, enthalpy switch, and fan status/filter status/ humidity/ remote occupancy.
7. Software upgrades will be accomplished by local download. No software upgrades through chip replacements are allowed.

23 09 33 Electric and Electronic Control System for HVAC

23 09 33.13 Decentralized, Rooftop Units:

23 09 33.13.A. General:

1. Shall be complete with self- contained low- voltage control circuit protected by a resettable circuit breaker on the 24- v transformer side. Transformer shall have 75VA capability.
2. Shall utilize color- coded wiring.
3. Shall include a central control terminal board to conveniently and safely provide connection points for vital control functions such as: smoke detectors, phase monitor, gas controller, economizer, thermostat, DDC control options, and low and high pressure switches.

23 09 33.23.B. Safeties:

1. Compressor over- temperature, over- current. High internal pressure differential.
2. Low- pressure switch.
   a. Low pressure switch shall use different color wire than the high pressure switch. The purpose is to assist the installer and service technician to correctly wire and or troubleshoot the rooftop unit.
3. High- pressure switch.
   a. High pressure switch shall use different color wire than the low pressure switch. The purpose is to assist the installer and service technician to correctly wire and or troubleshoot the rooftop unit.
4. Automatic reset, motor thermal overload protector.

23 09 93 Sequence of Operations for HVAC Controls

23 09 93.13 Decentralized, Rooftop Units:

23 09 93.13 INSERT SEQUENCE OF OPERATION

23 40 13 Panel Air Filters

23 40 13.13 Decentralized, Rooftop Units:

23 40 13.13.A. Standard filter section

1. Shall consist of factory- installed, low velocity, disposable 2” thick fiberglass filters of commercially available sizes.
2. Units can accept 2” or 4” filters and have a field convertible toolless
3. Filters shall be accessible through an access panel with toolless removal as described in the unit cabinet section of this specification (23 81 19.13.H).

23 81 19 Self- Contained Air Conditioners

23 81 19.13 Small- Capacity Self- Contained Air Conditioners

23 81 19.13.A. General

1. Outdoor, rooftop mounted, electrically controlled, heating and cooling unit utilizing a fully hermetic scroll compressor(s) for cooling duty and gas combustion for heating duty.
2. Factory assembled, single- piece heating and cooling rooftop unit. Contained within the unit enclosure shall be all factory wiring, piping, controls, and special features required prior to field start- up.
3. Unit shall use environmentally sound, R-410A refrigerant.

4. Unit shall be installed in accordance with the manufacturer's instructions.
5. Unit must be selected and installed in compliance with local, state, and federal codes.

23 81 19.13.B. Quality Assurance

1. Unit meets ASHRAE 90.1 minimum efficiency requirements.
2. XYE units are Energy Star certified.
3. Unit shall be rated in accordance with AHRI Standards 210/240 or 340/360.
4. Unit shall be designed to conform to ASHRAE 15.
5. Unit shall be UL- tested and certified in accordance with ANSI Z21.47 -2012/CSA 2.3-2012, CSA C22.2 No. 236-11 (UL 1995) 4th edition and CSA C22.2 No. 3 - M 1988.
6. Insulation and adhesive shall meet NFPA 90A requirements for flame spread and smoke generation.
7. Unit casing shall be capable of withstanding 750- hour salt spray exposure per ASTM B117 (scribed specimen).
8. Unit shall be designed in accordance with ISO 9001, and shall be manufactured in a facility registered by ISO 9001.
9. Roof curb shall be designed to conform to NRCA Standards.
10. Unit shall be subjected to a completely automated run test on the assembly line. The data for each unit will be stored at the factory, and must be available upon request.
11. Unit shall be designed in accordance with UL Standard 1995 Fourth Edition, including tested to withstand rain.
12. Unit shake tested to assurance level 1, ASTM D4169 to ensure shipping reliability.
13. High Efficient Motors listed shall meet section 313 of the Energy Independence and Security Act of 2007 (EISA 2007).

23 81 19.13.C. Delivery, Storage, and Handling

1. Unit shall be stored and handled per manufacturer's recommendations.

23 81 19.13.E. Project Conditions

1. As specified in the contract.

23 81 19.13.F. Operating Characteristics

1. Unit shall be capable of starting and running at 125°_F (52°_C) ambient outdoor temperature, meeting maximum load criteria of AHRI Standard 210/240 or 340/360 at ± 10% voltage.
2. Compressor with standard controls shall be capable of operation down to 40°_F (4°_C), ambient outdoor temperatures. See below for head pressure control package or winter start kit.
3. Unit shall discharge supply air vertically or horizontally as shown on contract drawings.
4. Unit shall be factory configured for vertical supply & return configurations.
5. Unit shall be field convertible from vertical to horizontal airflow on all models.
6. Unit shall be capable of mixed operation: vertical supply with horizontal return or horizontal supply with vertical return.

23 81 19.13.G. Electrical Requirements

1. Main power supply voltage, phase, and frequency must match those required by the manufacturer.

23 81 19.13.H. Unit Cabinet

1. **Unit cabinet shall be constructed of galvanized steel with exterior surfaces coated with a non-chalking, powder paint finish, certified at 750 hour salt spray test per ASTM-B117 standards.**
2. Evaporator fan compartment interior cabinet insulation shall conform to AHRI Standards 210/240 or 340/360 minimum exterior sweat criteria. Interior surfaces shall be insulated with a minimum 1/2- in. thick, 1 1/2 lb density, flexible fiberglass insulation, neoprene coated on the air side. Aluminum foil- faced fiberglass insulation shall be used in the electric heat compartment. Fan shall be a direct drive or belt drive assembly and include an adjustable pitch motor pulley. Job site selected brake horsepower shall not exceed the motors

nameplate horsepower rating plus the service factor (Only premium efficiency motors have hp rating on the nameplate). Units shall be designed to operate within the service factor. Fan wheel shall be double inlet type with forward curve blades, dynamically balanced to operate smoothly throughout the entire range of operation. Airflow design shall be constant volume. Bearings shall be sealed and permanently lubricated for longer life and no maintenance.

Condenser Fan Assembly: The outdoor fans shall be of the direct drive type, discharge air vertically, have aluminum blades riveted to corrosion resistant steel spider brackets and shall be dynamically balanced for smooth operation. The outdoor fan motors shall have permanently lubricated bearings internally protected against overload conditions and staged independently.

3. Base of unit shall have a minimum of four locations for thru- the- base gas and electrical connections (field installed), standard.
4. Base Rail
   a. Unit shall have base rails on a minimum of 4 sides.
   b. Holes shall be provided in the base rails for rigging shackles to facilitate maneuvering and overhead rigging.
   c. Holes shall be provided in the base rail for moving the rooftop by fork truck.
   d. Base rail shall be a minimum of 16 gauge thickness.
5. Condensate pan and connections:
   a. Shall be an internally sloped condensate drain pan made of a non- corrosive material. b. Shall comply with ASHRAE Standard 62.
   c. Shall use a 3/4” - 14 NPT drain connection, possible either through the bottom or side of the drain pan. Connection shall be made per manufacturer’s recommendations.
6. Top panel:
   a. Shall be a single piece top panel.
7. Electrical Connections
   a. All unit power wiring shall enter unit cabinet at a single, factory- prepared, knockout location. b. Thru- the- base capability.
      (1.) Standard unit shall have a thru- the- base electrical location (s) using a raised, embossed portion of the unit base-pan.
      (2.) Optional, factory- approved, water- tight connection method must be used for thru- the- base electrical connections.
      (3.) No base-pan penetration, other than those authorized by the manufacturer, is permitted.
8. Component access panels (standard)
   a. Cabinet panels shall be easily removable for servicing.
   b. Unit shall have one factory installed, toolless, removable, filter access panel.
   c. Panels covering control box, indoor fan, indoor fan motor, gas components (where applicable), and compressors shall have a molded composite handles.
   d. Handles shall be UV modified, composite. They shall be permanently attached, and recessed into the panel.
   e. Screws on the vertical portion of all removable access panel shall engage into heat resistant, molded composite collars.
   f. Collars shall be removable and easily replaceable using manufacturer recommended parts.

23 81 19.13.J. Coils

1. Standard Aluminum Fin/Copper Tube Coils:
   a. Standard evaporator and condenser coils shall have aluminum lanced plate fins mechanically bonded to seamless internally grooved copper tubes with all joints brazed.

b. Evaporator coils shall be leak tested to 150 psig, pressure tested to 450 psig, and qualified to CSA C22.2 No. 236-11 (UL 1995) 4th edition burst test at 1775 psig.
c. Condenser coils shall be leak tested to 150 psig, pressure tested to 650 psig, and qualified to CSA C22.2 No. 236-11 (UL 1995) 4th edition burst test at 1980 psig.

2. Optional E-Coat- coated aluminum- fin evaporator and condenser coils:
   a. Shall have a durable epoxy- phenolic coating to provide protection in mildly corrosive coastal environments.
   b. Coating shall be applied to the aluminum fin stock prior to the fin stamping process to create an inert barrier between the aluminum fin and copper tube.
   c. Epoxy- phenolic barrier shall minimize galvanic action between dissimilar metals.

23 81 19.13.K. Refrigerant Components

1. Refrigerant circuit shall include the following control, safety, and maintenance features:
   a. Thermostatic Expansion Valve (TXV) shall help provide optimum performance across the entire operating range. Shall contain removable power element to allow change out of power element and bulb without removing the valve body. (Orifice on 3-5 Ton Units)
   b. Refrigerant filter drier - Solid core design.
   c. Service gauge connections on suction and discharge lines.
   d. Pressure gauge access through a specially designed access port in the top panel of the unit.
2. There shall be gauge line access port in the skin of the rooftop, covered by a black, removable plug.

a. The plug shall be easy to remove and replace.
b. When the plug is removed, the gauge access port shall enable maintenance personnel to route their pressure gauge lines.
c. This gauge access port shall facilitate correct and accurate condenser pressure readings by enabling the reading with the compressor access panel on.
d. The plug shall be made of a leak proof, UV- resistant, composite material.

3. Compressors
   a. Unit shall use fully hermetic, scroll compressor for each independent refrigeration circuit.
   b. Compressor motors shall be cooled by refrigerant gas passing through motor windings.
   c. Compressors shall be internally protected from high discharge temperature conditions.
   d. Compressors shall be protected from an over- temperature and over- amperage conditions by an internal, motor overload device.
   e. Compressor shall be factory mounted on rubber grommets.
   f. Compressor motors shall have internal line break thermal, current overload and high pressure differential protection.
   g. Crankcase heaters shall not be required for normal operating range, unless provided by the factory.

23 81 19.13.L. Filter Section

1. Filters access is specified in the unit cabinet section of this specification.
3. Shall consist of factory- installed, low velocity, throw- away 2” thick fiberglass filters.
3. Units can accept 2” or 4” filters and have a field convertible toolless

23 81 19.13.M. Evaporator Fan and Motor

1. Evaporator fan motor:
   a. Shall have permanently lubricated bearings.
   b. Shall have inherent automatic reset thermal protection (Only on single-phase, belt-drive motors, three - phase, belt-drive motors have internal thermostat used for external line-break control.).
2. Electric Drive (Direct Drive) X13 – 5 Speed/Torque Evaporator Fan:
   a. Multi- speed motor with easy quick adjustment settings.

b. Blower fan shall be double- inlet type with forward- curved blades.
c. Shall be constructed from steel with a corrosion resistant finish and dynamically balanced.

3. Belt- driven Evaporator Fan:
   a. Belt drive shall include an adjustable- pitch motor pulley.
   b. Shall use sealed, permanently lubricated ball- bearing type.
   c. Blower fan shall be double- inlet type with forward- curved blades.
   d. Shall be constructed from steel with a corrosion resistant finish and dynamically balanced.

23 81 19.13.N. Condenser Fans and Motors

The outdoor fans shall be of the direct drive type, discharge air vertically, have aluminum blades riveted to corrosion resistant steel spider brackets and shall be dynamically balanced for smooth operation. The outdoor fan motors shall have permanently lubricated 60°C ball bearings internally protected against overload conditions and staged independently.

1. Condenser fan motors:
   a. Shall be a totally enclosed motor.
   b. Shall use permanently lubricated bearings.
   c. Shall have inherent thermal overload protection with an automatic reset feature.
   d. All models shall use a shaft- down design.
2. Condenser Fans:
   a. Shall be a direct- driven propeller type fan.
   b. Shall have galvanized steel blades riveted to corrosion- resistant steel spiders and shall be dynamically balanced.

23 81 19.13.O. Special Features Options and Accessories

1. Standard Integrated Economizers:
   a. Integrated, gear- driven opposing modulating blade design type capable of simultaneous economizer and compressor operation.
   b. Independent modules for vertical or horizontal return configurations shall be available. Vertical return modules shall be available as a factory installed option.
   c. Damper blades shall be galvanized steel with composite gears. Plastic or composite blades on intake or return shall not be acceptable.
   d. Shall include all hardware and controls to provide free cooling with outdoor air when temperature and/or humidity are below set-points.
   e. Shall be equipped with gear driven dampers for both the outdoor ventilation air and the return air for positive air stream control.
   f. Standard models shall be equipped with low- leakage dampers, not to exceed 2% leakage at 1 in. wg pressure differential. Economizers will come with Actuator and module that is tied to Smart Equipment™:
      (1.) Combined minimum and DCV maximum damper position potentiometers with compressor staging relay.
      (2.) Functions with solid state analog enthalpy or dry bulb changeover control sensing.
      (3.) Contain LED indicates for: when free cooling is available when module is in DCV mode when exhaust fan contact is closed
2. Two- Position Damper
   a. Damper shall be a Two- Position Damper. Damper travel shall be from the full closed position to the field adjustable %- open setpoint.
   b. Damper shall include adjustable damper travel from 25% to 100% (full open).
   c. Damper shall include single or dual blade, gear driven dampers and actuator motor.
   d. Actuator shall be direct coupled to damper gear. No linkage arms or control rods shall be acceptable. e. Damper will admit up to 100% outdoor air for applicable rooftop units.

f. Damper shall close upon indoor (evaporator) fan shutoff and/or loss of power.
g. The damper actuator shall plug into the rooftop unit's wiring harness plug. No hard wiring shall be required.
h. Outside air hood shall include aluminum water entrainment filter.

3. Manual damper
   a. Manual damper package shall consist of damper, air inlet screen, and rain hood which can be preset to admit up to 25 or 50% outdoor air for year round ventilation.
4. Condenser Coil Hail Guard Assembly (Factory and Field installed on all models):
   a. Shall protect against damage from hail.
   b. Shall be of louvered style.
5. Unit- Mounted, Non- Fused Disconnect Switch:
   a. Switch shall be factory- installed, internally mounted.
   b. National Electric Code (NEC) and UL approved non- fused switch shall provide unit power shutoff.
   c. Shall be accessible from outside the unit.
   d. Shall provide local shutdown and lockout capability.
6. Thru- the- Base Connectors:
   a. Kits shall provide connectors to permit gas and electrical connections to be brought to the unit through the unit base-pan.
   b. Minimum of four connection locations per unit.
7. Propeller Power Exhaust:
   a. Power exhaust shall be used in conjunction with an integrated economizer.
   b. Independent modules for vertical or horizontal return configurations shall be available.
   c. Horizontal power exhaust shall be mounted in return ductwork.
   d. Power exhaust shall be controlled by economizer controller operation. Exhaust fans shall be energized when dampers open past the 0- 100% adjustable setpoint on the economizer control.
8. Roof Curbs (Vertical):
   a. Full perimeter roof curb with exhaust capability providing separate air streams for energy recovery from the exhaust air without supply air contamination.
   b. Formed galvanized steel with wood nailer strip and shall be capable of supporting entire unit weight.
   c. Permits installation and securing of ductwork to curb prior to mounting unit on the curb.
9. Outdoor Air Enthalpy Sensor:
   a. The outdoor air enthalpy sensor shall be used to provide single enthalpy control. When used in conjunction with a return air enthalpy sensor, the unit will provide differential enthalpy control. The sensor allows the unit to determine if outside air is suitable for free cooling.
10. Return Air Enthalpy Sensor:
    a. The return air enthalpy sensor shall be used in conjunction with an outdoor air enthalpy sensor to provide differential enthalpy control.
11. Indoor Air Quality (CO_2) Sensor:
    a. Shall be able to provide demand ventilation indoor air quality (IAQ) control.
    b. The IAQ sensor shall be available in duct mount, wall mount, or wall mount with LED display. The set- point shall have adjustment capability.
    c. Shall be environmental compensated with differential sensing for reliable, stable, and drift- free sensitivity.
    d. Shall use magnet- activated test/reset sensor switches.
    e. Shall have tool- less connection terminal access.

Subject to change without notice. Printed in U.S.A.
Copyright © 2020 by Johnson Controls, Inc. All rights reserved.
5147366-TTG-O-0120
Supersedes: 5147366-TTG-N-0918

York International Corporation
5005 York Drive
Norman, OK 73069