1068153-BTG-Z-0120

TECHNICAL GUIDE

ZX/ZY/ZQ/ZL SERIES
3 - 12.5 TON
60 HERTZ

FOR DISTRIBUTION USE ONLY - NOT TO BE USED AT POINT OF RETAIL SALE

Table of Contents

Table of Contents 2
Component Location 3
Factory Installed Options 7
Field Installed Accessories 8
Nomenclature 10
AHRI Cooling Rating Table 14
AHRI 270 Outdoor Sound Power Levels 15
Physical Data 16
Capacity Performance 57
Airflow Performance 106
Power Exhaust Blower Curves 130
Electrical Data 131
Typical Wiring Diagrams 193
Weights and Dimensions 235
Economizer Options 245
Guide Specifications 248

Product Highlights

- Assembled in Norman, OK
- ASHRAE 90.1 Compliant
- R-410A Refrigerant
- Cooling Only and Gas/Electric configurations available
- Scroll Compressors
- Up to 16.3 IEER and 12.2 EER on the 3 stage cooling advanced building code compliant level.
- Up to 15.4 SEER and 12.2 EER on the Energy Star Compliant Energy Level
- Up to 14.0 SEER and 11.2 EER on the ASHRAE 90.1 Compliant Standard Efficiency Level
- DOE (Department of Energy) Complaint - All models meet minimum DOE efficiencies for cooling and fan efficiencies. Single phase gas heating products are fan energy rated (FER) to meet DOE requirements.

NOTE: All single phase 3-5 ton gas heating units are equipped with an ECM motor on direct drive units.

- State of the art Microprocessor Controls with specific programming for product applications
- MicroChannel Condenser Coils
- Evaporator coils utilize copper tube/aluminum fin design for proven reliability and performance.
- TXV (Thermostatic Expansion Valve) Standard on: ASHRAE 90.1 Compliant Standard Efficiency Level 5 - 12.5 ton models, Energy Star Compliant Efficiency Level 3 - 10 ton models and advanced building code compliant efficiency level 7.5-12.5 ton models.
- Single-stage Cooling (3 -6 ton models)
- Two-stage Cooling (6 - 12.5 ton models)
- Three-stage Cooling available (7.5-12.5 ton models)
- Alternate Motor and Drives

Options and Accessories

- Economizers with Barometric Relief
- Louvered Hail Guards
- Non-fused Disconnect (Verify on the unit nameplate that the disconnect is properly sized for the application. Units with field installed electric heat may exceed the factory installed disconnect amperage rating.)
- Power Exhaust
- Propane Conversion Kits
- High Altitude Heating Conversion Kits
- Flue Exhaust Extension Kit
- Flue Heat Shield
- Smoke Detectors
- Manual and Motorized Dampers
- Hinged Cabinet Doors
- Low Ambient Head Pressure Control Kit.
- Optional Stainless Steel Heat Exchanger (Standard on 3-5 Ton Low-NOx Models)
- Thru-The-Base Connections for power, gas and control wiring.
- Intelli*Speed*™ with Premium Efficiency indoor motors to meet ASHRAE 90.1 requirements (6-12.5 ton models)
- Field Installed Electric Heat Kit, Installation Instructions for the Electric Heat Kits may be found in the Electric Heat Kits.

Component Location

Cooling With Gas Heat (3 Through 5 Ton)

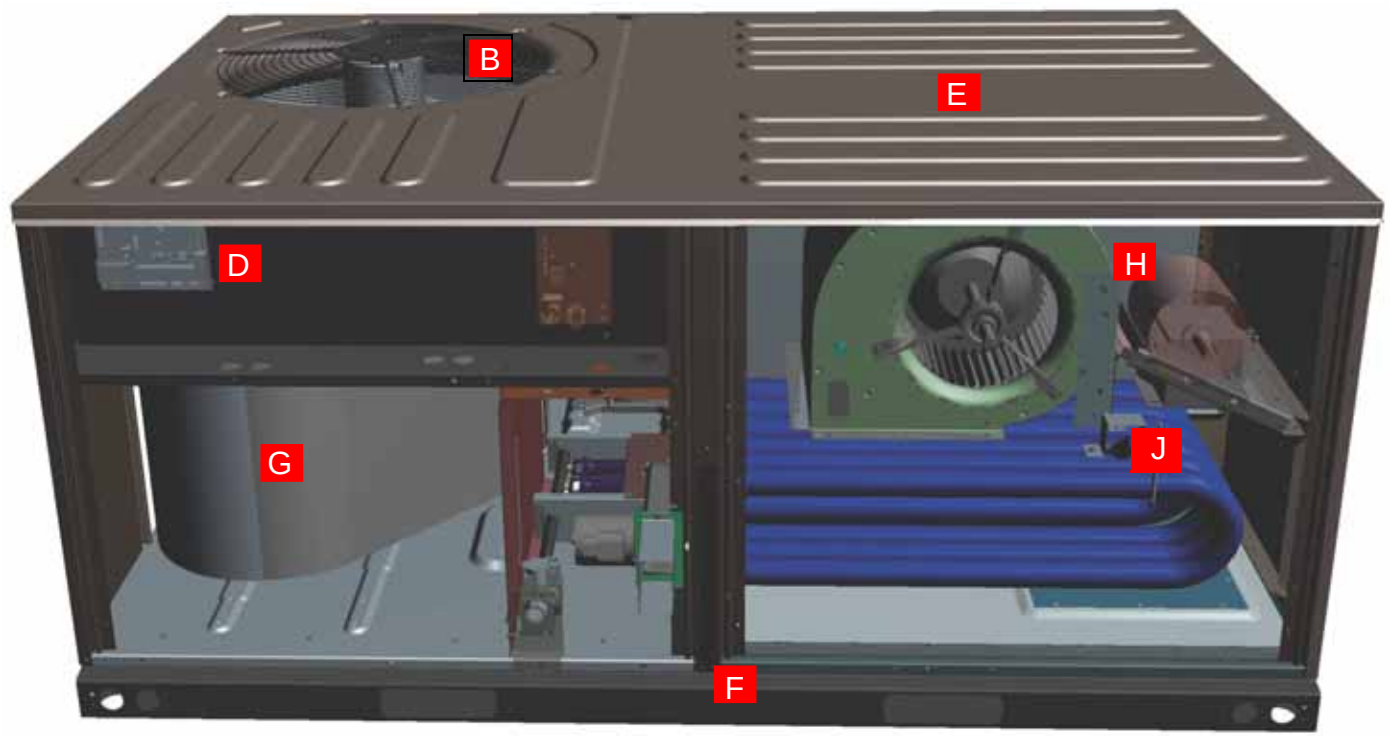

Click on the letters to see a description of the features.

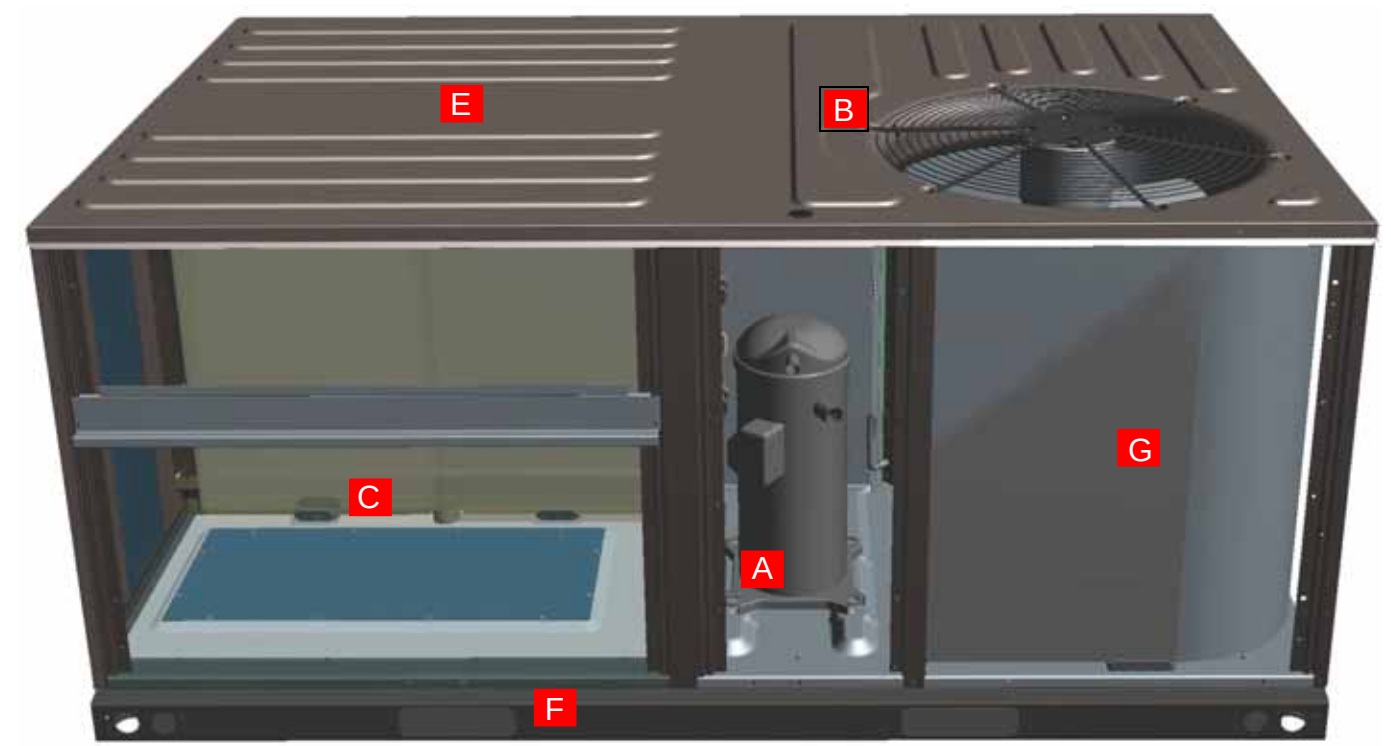

Features and Benefits

Two Tiers of Efficiency - 14 SEER standard efficiency provides a cost effective 14 SEER/11.0 EER product that meets ASHRAE 90.1 requirements. The High-efficiency meets the requirements for Energy Star that exceeds 15 SEER and 12 EER. The high efficiency 3-stage cooling units are available from 7.5 to 12.5 tons to meet advanced building code requirements. Gas/electric units have electronic spark ignition and power vented combustion steady state efficiencies of 80%. These efficiencies meet or exceed all legislated minimum levels providing lower operating costs.

A **All models utilize scroll compressors** that are environmentally friendly by utilizing R-410A refrigerant. Use of the scroll compressor technology means a simple internal design, fewer moving parts, equating to a quiet, reliable, easy to service and efficient system. Internal compressor protection is standard and compressors include protection to prevent liquid damage.

Total system design - A TXV is used for precise metering on the 6-12.5 Ton products and a fixed orifice is used to keep the cost of the product down on the 3-5 ton product. Two independent refrigerant circuits and compressors are used on the 7.5- 12.5 ton units for economical and precise control. A single circuit, single compressor design is used on the 3-6 ton units for cost effectiveness and reliability without compromising quality.

System Protection - Liquid line filter-driers, high and low pressure safeties are standard on each independent refrigerant circuit. Suction line sensors monitor temperature to prevent possible liquid flood back to the compressors and also protect against loss of charge and coil frosting.

B **Balanced outdoor fan design makes for a quieter unit** - The outdoor condenser fans are dynamically balanced for better performance and reliability. The direct drive fan design mounted to the fan grill allows for quick and easy service. Where other's components might fail at extreme temperatures Our units are tested and rated up to 125°F ambient cooling operation.

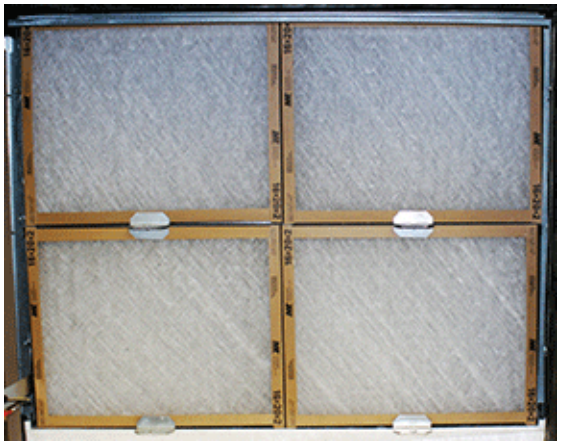

C **Convertible Filter Rack -** No tools required for easy field conversion of the filter rack to accommodate either 2” or 4” filters. Units will ship with MERV 4 throwaway filters standard; however MERV 8 and MERV 13 filters can be easily added through the tool-free filter access panel to meet LEED requirements. Refer to physical data tables for filter size details.

D **Units will come with the state of the art Smart Equipment™ control system.** The unit control incorporates the best of the already proven Smart Equipment™ controls and creates a more robust, intelligent control. The goal of this control is to utilize cutting edge technology making the equipment easier to install, operate, and service. All units are Factory commissioned, configured, and run tested.

Versatile - The Smart Equipment™ control can be configured to use with a standard thermostat (easy to connect screw terminals), a zone sensor, or can be setup to communicate with multiple BAS communication protocols to integrate with building automation systems.

Reduce field installed complexity - Each unit will come equipped with factory installed supply air, return air, and outdoor air temperature sensors providing key temperature readings thus reduce field installed complexity.

On-board USB Port - The control comes with a long list of features including data logging, current and previous system faults and software update capabilities using the on board USB port and common flash drive. Energy use monitoring capabilities allow custom tailoring to allow a system to work more efficiently at all times and occupancy levels. Self test and start-up reports also available from the board VIA the USB port.

Embedded LCD Display - The board has a easy to read, built-in LCD display and easy to use navigation joystick and buttons allowing the user to quickly navigate the menus displaying unit status, options, current function, supply, return and outdoor temperatures, fault codes and other information.

Safety Monitoring - The control monitors the outdoor, supply, and return air temperatures and the high and low pressure switch status on the independent refrigerant circuits. On units with heating the gas valve and high temperature limit switches are monitored on gas and electric heating units. The control also monitors the voltage supplied to the unit and will protect the unit if low voltage due to a brown out, or other electrical issue occurs.

Low Ambient - An integrated low-ambient control allows units to operate in the cooling mode down to 0°F outdoor ambient without additional components or intervention. Optionally, the control board can be programmed to lockout the compressors when the outdoor air temperature is low or when free cooling is available.

Anti-Short Cycle Protection - To aid compressor life, an anti-short cycle delay is incorporated into the standard control. Compressor reliability is further ensured by programmable minimum run times. For testing, the anti-short cycle delay can be temporarily overridden with the push of a button.

Fan Delays - Fan on and fan off delays are fully programmable. Furthermore, the heating and cooling fan delay times are independent of one another. All units are programmed with default values based upon their configuration of cooling and/or heating capacity.

Nuisance Trip Protection and Three Strikes - To prevent nuisance calls, the control board uses a three times, you're out philosophy. The high, low-pressure switch, anti-freeze protection, low voltage or heating high limit must trip three times within two hours before the unit control board will lock out the associated compressor. The same safety must trip three times before a hard lockout will occur.

E **Robust design -** Each unit is designed with an embossed top to increase structural support and ensure rigidity. The unit has a powder paint exterior finish including a industry leading 750-hour salt spray rating. All units are painted with a long lasting, powder paint that stands up over the life of the unit.

F **Full Perimeter base rail that fits on many existing curbs -** This product was designed with the replacement market in mind which is why it will fit on many existing curbs in the field but it also takes into account the new construction market by being versatile and sturdy. This unit is equipped with heavier gauge and innovatively designed base rails to prevent damage from transporting and rigging.

G **Coils -** All units utilize Micro-Channel "all-aluminum" condenser coils that provides improved heat transfer capabilities and reduced refrigerant charge volumes. This equates to all units meeting LEED EA Credit 4 Requirements for Enhanced Refrigerant Management. MicroChannel coils are also much easier to clean than your typical fin/tube designs.

All evaporator coils utilize copper tube with aluminum fin design for proven reliability and performance.

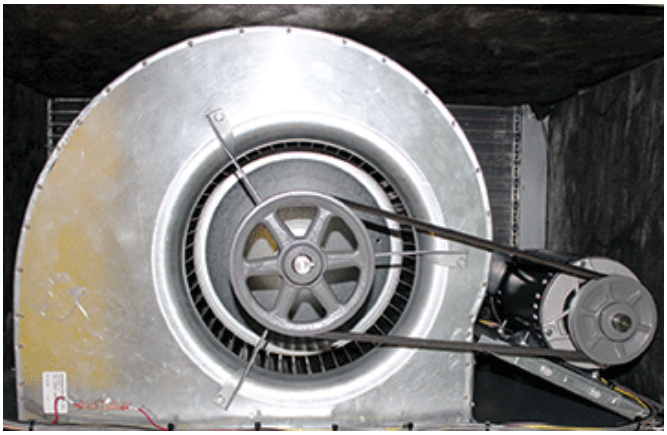

H **Rigid Mounted Blower Assembly -** Dynamically balanced indoor fans ensure better performance and reliability. Large access panels for easier access, service, and maintenance. X13 Direct drive (Standard Static Option) and belt drive (Medium Static and High Static Options) options available on 3-5 ton products. The belt drive option is standard on 6-12.5 ton products. Low, Medium, and High Static drive options for airflow versatility up to 2" ESP with no field installed drive packages necessary. The X13 motor technology offers several benefits w/ respect to efficiency, operation, comfort, and cost when compared to other motors. Premium efficiency indoor motors are standard on ZY06 and ZX14. The Intelli*Speed*™ option is available on 6-12.5 ton products and standard on the 3 stage cooling models to meet ASHRAE 90.1 and Title 24 Requirements. The blower section includes a dual density insulation for indoor air quality.

J **Balanced Heating -** The two stage gas heating offers ultimate heating comfort with a balance between 1st and 2nd stage gas heating. The first stage of a two stage gas heat option provides approximately 70% of the heating capacity in all 3-12.5 tons two stage gas heat models. Balanced heating allows the unit to better maintain desired temperatures and helps saves energy. Low-NOx comes standard with a stainless steel heat exchanger to meet California environmental requirements. The heat exchanger section includes foil faced insulation that is not only environmentally friendly but meets all NFPA codes.

Warranty - All models include a 1-year limited warranty on the complete unit. Compressors carry a 5-year warranty. Aluminized steel heat exchangers carry a 10-year warranty and stainless steel heat exchangers carry a 15- year warranty.

Factory Installed Options

(Nomenclature Digit Position)

Airflow Options (8)

Alternate Indoor Blower Motor - For applications with high static restrictions, units are offered with optional indoor motors providing higher external static capability and/or higher airflow, depending upon the installer's needs.

- A=Standard Static (Direct Drive for 3-5 ton; Belt Drive for 6-12.5 Ton)
- B=Medium Static (Belt Drive for 3-12.5 Ton)
- C=High Static (Belt Drive for 3-12.5 Ton; 3 Phase Models Only)

VFD/VAV Options (9)

Intelli*Speed*™ Supply Fan Control Option (ASHRAE 90.1 compliant) - Units configured with the Intelli*Speed*™ Supply Fan Option will contain a VFD for variable volume supply fan operation. This option allows the supply fan RPM to vary based on the number of compressors or heating stages energized. The economizer's minimum position is also configurable.

- 1=None (Comes with standard constant volume controls)
- 2=VFD/VAV (ZL 3-Stage only)
- 3=VFD Intelli*Speed*™ (standard on ZL High Efficiency 3-stage cooling models)

Coil Options (10)

E-Coat Coils – Coils are coated with an epoxy polymer coating to protect against corrosion. A 3-year warranty is added when this option is selected.

- A=Standard Indoor & Outdoor Coils (fin/tube design on indoor coil and MicroChannel design used on outdoor coil with no E-Coat coating added).
- B=Standard Indoor Coil & E-Coat Coil Outdoor Coil (fin/tube design on indoor coil and MicroChannel design used on outdoor coil. E-Coat coating added to outdoor coil)
- C= E-Coat Indoor Coil & Standard Outdoor Coil (fin/tube design on indoor coil and MicroChannel design used on outdoor coil. E-Coat coating added to indoor coil)
- D= E-Coat Indoor Coil & Outdoor Coil (fin/tube design on indoor coil and MicroChannel design used on outdoor coil. E-Coat coating added to indoor and outdoor coil)

Controls (11)

Smart Equipment™ - This is the Standard microprocessor control with capabilities to work with a sensor or thermostat only. Smart Equipment™ with BAS includes communication board with BACnet open-protocol system.

Verasys - Verasys provides a simple user experience with configurable self-recognizing controllers without the need for any additional tools. Verasys creates enhanced integration of HVACR equipment, zoning, and controls. Contractors are able to offer a complete bundled solution of equipment and controls to serve the light commercial market.

- A=Smart Equipment™
- B=Smart Equipment™ + BACnet MSTP, Mdbs, N2 COM Card
- J=Verasys Single Zone
- K=Verasys Change Over Bypass

Sensor Options (12)

- 1=None (Units come standard with factory installed supply air, return air, and outdoor air temperature sensors)
- 2=RA[1] Smoke Detector
- 3=SA Smoke Detector
- 4=RA[1] & SA Smoke Detector

1. Return Air Smoke Detector Sensor Must Be Relocated in the Field. (See Unit Installation Manual.)

Economizer/Damper (13)

Down flow Economizers (with barometric relief) - All units offer a variety of optional factory installed economizers that are shipped, installed and wired with AMCA 511 Licensed Class 1A low leak dampers designed to exceed ASHRAE 90.1 and the International Energy Conservation Code (IECC) certification requirements by achieving leakage rates of 3 cfm/sq. ft. at 1" of static pressure. Each economizer goes through a rigorous 60,000 cycle test. Dry bulb, single enthalpy, and dual enthalpy (with field installed kit) can be selected. All economizer options are fully integrated into the Smart Equipment™ controls. The economizer has spring return, fully modulating damper actuators and is capable of introducing up to 100% outdoor air. As the outdoor air intake dampers open, the return air dampers close. The changeover from mechanical refrigeration to economizer operation is regulated by the outdoor air dry bulb temperature or the outdoor air enthalpy input. The dual enthalpy kit provides a second input used to monitor the return air (field installed). The installer needs only to assemble the outdoor air hood, attach the enthalpy control the hood and mount the hood to the unit (Hood and control are provided).

Dry Bulb Economizer - Economizer operation is enabled by the outdoor air temperature being less than the setpoint of the economizer module.

Enthalpy Economizer - The added outdoor air enthalpy sensor enables economizer operation if the outdoor enthalpy is less than the setpoint of the economizer logic module.

- A=None
- B=Dry Bulb Economizer
- C=Enthalpy Economizer

Convenience Outlet (14)

Convenience Outlet - (Powered and Non-Powered) - This option locates a 120V single-phase GFCI outlet with cover, on the corner of the unit housing adjacent to the compressors. The Non-powered option requires the installer to provide the 120V single-phase power source and wiring. Factory installed option only.

- 1=None
- 2=Non-powered Convenience Outlet
- 3=Powered Convenience Outlet

Electrical Options (15)

Disconnect Switch - For units with field installed electric heat kits, two factory installed disconnect sizes are available (60A or 100A non-fused disconnect). Depending on the field installed heater kit selected, the factory installed disconnect may not be sufficient. Always refer to the unit nameplate or unit electrical data for the proper disconnect size. If the heater application requires a disconnect above 100 Amps, the factory installed disconnect should be removed and an appropriately sized external disconnect should be installed.

- 1=None
- 2=Non-fused Disconnect[1]

1. Verify on the unit nameplate that the disconnect is properly sized for the application. Units with field installed electric heat may exceed the factory installed disconnect amperage rating.

Cabinet Options (16)

Louvered Hail Guard - This kit includes a decorative louvered panel which installs over the outside condenser coil and prevents damage to the coil fins from hail strikes.

Hinged Cabinet Doors - The factory installed hinged panel option will save time, money and labor while allowing easy servicing of blower components, filters and controls. With this option there is no longer a need to remove panels to access these critical sections and running the risk of losing panels or roof damage from loose panels and materials. Extra care was taken to design a durable hinged panel with leak tight seal.

- 1=None
- 2=Louvered Panels
- 3=Hinged Cabinet Doors
- 4=Hinged Cabinet Doors And Louvered Panels

FDD (Fault Detection and Diagnostics) - Refrigerant side A Modification Shop offering for an additional installed control system for commercial equipment that constantly monitors refrigerant circuit pressures, refrigerant circuit temperatures, as well as the environmental temperatures and humidity via multiple sensor inputs.

Field Installed Accessories

- **Down flow Economizers/Horizontal Economizers (with barometric relief)** - All units offer a variety of field installed economizers that are installed and wired with AMCA 511 Licensed Class 1A low leak dampers designed to exceed ASHRAE 90.1 and the International Energy Conservation Code (IECC) certification requirements by achieving leakage rates of 3 cfm/sq. ft. at 1" of static pressure. Each economizer goes through a rigorous 60,000 cycle test. Dry bulb, single enthalpy, and dual enthalpy (with field installed kit) can be selected. All economizer options are fully integrated into the Smart Equipment™ controls. The economizer has spring return, fully modulating damper actuators and is capable of introducing up to 100% outdoor air. As the outdoor air intake dampers open, the return air dampers close. The

changeover from mechanical refrigeration to economizer operation is regulated by the outdoor air dry bulb temperature or the outdoor air enthalpy input. The dual enthalpy kit provides a second input used to monitor the return air (field installed). The installer needs only to assemble the outdoor air hood, attach the enthalpy control the hood and mount the hood to the unit (Hood and control are provided).

- **Dry Bulb Economizer -** Economizer operation is enabled by the outdoor air temperature being less than the setpoint of the economizer module.
- **Single Enthalpy Control, Accessory for Economizer -** All field installed economizers will come standard as a dry bulb economizer. This kit adds an outdoor air enthalpy sensor which enables economizer operation if the outdoor enthalpy is less than the setpoint of the economizer logic module.
- **Dual Enthalpy Control, Accessory for Economizer -** All field installed economizers will come standard as a dry bulb economizer. This kit adds an outdoor air enthalpy sensor and return air enthalpy sensor which enables economizer operation if the outdoor enthalpy is less than the setpoint of the economizer logic module.
- **Power Exhaust -** This accessory installs in the unit with a down flow economizer or in the ductwork for a horizontal application.
- **Louvered Hail Guard -** This kit includes a decorative louvered panel which installs over the outside condenser coil and prevents damage to the coil fins from hail strikes.
- **Flue Exhaust Extension Kit -** In locations where wind or weather conditions may interfere with proper exhausting of furnace combustion products, this kit can be installed to prevent the flue exhaust from entering nearby fresh air intakes.
- **Propane Conversion Kit** - This kit converts a gas heat unit to operate with propane gas at altitudes up to 2,000 feet.
- **Gas Heat High Altitude Kit -** This kit converts a gas heat unit to operate at high altitudes, 2,000 to 10,000 feet. Conversion kits are available for natural gas and propane.
- **Roof Curbs -** The roof curbs have insulated decks and are shipped disassembled The roof curbs are available in 14 and 24 heights.
- **Thermostat -** The units are designed to operate with 24-volt electronic and electro-mechanical thermostats. All 7.5 thru 12.5 ton units operate with two-stage heat/two-stage cool or two-stage cooling only thermostats and 2 stage heat / 3 stage cool on ZL tier products depending upon unit configuration.
- **Smoke detectors -** The smoke detectors stop operation of the unit by interrupting power and providing a fault message to the control board if smoke is detected within the air compartment. Smoke detectors are available for both the supply and/or return air configurations.
- **Hinged Filter Access Panel For Use With Horizontal Flow Economizer -** Allows hinged access to the filter section when used with a horizontal economizer.
- **Low Ambient Head Pressure Control Kit -** The Electronic Low Ambient Controller is designed to regulate condenser head pressure at low ambient temperatures by varying the amount of airflow through the condenser.
- **Manual Outdoor Air Damper -** Like the motorized outdoor air damper, each manual outdoor air damper includes a slide-in damper assembly with an outdoor air hood and filters. Customers have a choice of dampers with ranges of 0% to 100% or 0% to 35% outdoor air entry.
- **Thru The Base Connection -** Kits are available to provide a way to route wiring to the unit through the base of the unit and gas supplied to the unit through the base or through the curb. These kits provide a seal tight way to bring power and gas to the unit without additional roof penetrations.
- **Electric Heat (Field installed option Only) -** Select heater sizes for 3-12.5 ton units available. Necessary hardware and connectors are included with the heaters.

Nomenclature

3-12.5 Ton Model Number Nomenclature

ZX	G	04	D	2	A	1	A	A	1	A	1	1	1	A	2

Product Category

ZQ= Pkg AC 14 SEER Efficiency
ZX = Pkg AC Standard Efficiency
ZY = Pkg AC High Efficiency
ZL = Pkg AC High Efficiency 3-Stage

Heat Type (3)

E = No Heat, Electric Heat Field Installed
G = Gas Heat

Nominal Cooling Capacity

04 = 3 Ton
05 = 4 Ton
06 = 5 Ton
07 = 6 Ton (Excludes ZL Tier)
A7 = 6 Ton (Excludes ZL Tier)
08 = 7-1/2 Ton
09 = 8-1/2 Ton
12 = 10 Ton
14 = 12-1/2 Ton (Excludes ZY Tier)

Heat Size

A = No Heat (Cooling Only)

Gas Heat

D = Low Heat
E = Medium Heat
F = High Heat
L = Low Heat (Low NOx)
M = Medium Heat (Low NOx)
N = High Heat (Low NOx)
R = Low Heat (Stainless Steel)
S = Medium Heat (Stainless Steel)
T = High Heat (Stainless Steel)

Voltage

1 = 208/230-1-60 (3-5 Ton Only)
2 = 208/230-3-60
4 = 460-3-60
5 = 575-3-60

Airflow

A = Standard Static
B = Medium Static
C = High Static

Options

1 = None
2 = VFD/VAV (ZL 3-Stage Only)
3 = VFD IntellisSpeed™ (ZXA7-ZX14, ZYA7-ZY12 & ZL08-14)

Note: Not all options may be available. Contact local distributor.

Coil Options

A = Standard Indoor & Outdoor Coils
B = Standard Indoor Coil & ElectroFin Outdoor Coil
C = E-Coat Indoor Coil & Standard Outdoor Coil
D = E-Coat Indoor & Outdoor Coils

Controls

A = Smart Equipment™
B = Smart Equipment™ + BACnet MSTP, Mdbs, N2 COM Card
J = Verasys Single Zone
K = Verasys Change Over Bypass

Sensor Options

1 = None (Units come standard with factory installed supply air, return air, and outdoor air temperature sensors)
2 = RA[1] Smoke Detector
3 = SA Smoke Detector
4 = RA[1] & SA Smoke Detector

1. Return Air Smoke Detector Sensor Must Be Relocated in the Field. (See Unit Installation Manual.)

Economizer / Damper

A = None
B = Dry Bulb Economizer
C = Enthalpy Economizer

Convenience Outlet

1 = None
2 = Non-powered
3 = Powered

Electrical Options

1 = None
2 = Non-fused Disconnect[1]

1. Verify on the unit nameplate that the disconnect is properly sized for the application. Units with field installed electric heat may exceed the factory installed disconnect amperage rating.

Cabinet Options

1 = None
2 = Louvered Panels Installed
3 = Hinged Cabinet Doors
4 = Hinged Cabinet Doors & Louvered Panels

Special Options

A = None

Product Generation

2 = Second Generation
3 = Third Generation

Accessories

Accessory Kit Number	Description	Where Used	Voltage
2EE04706724	Econ, DB, Vertical Flow, Small Footprint	ZY04, ZY05, ZY06. ZQ04, ZQ5, ZQ06, ZXA7	All
2EE04706824	Econ, DB, Vertical Flow, Large Footprint	ZX08, ZX09, ZX12, ZX14, ZY07, ZYA7, ZY08, ZY09, ZY12, ZL08, ZL09, ZL12, ZL14	All
2EE04707024	Econ, DB, Horizontal Flow, Small Footprint, Short Cabinet	ZY04, ZQ04, ZQ05	All
2EE04707124	Econ, DB, Horizontal Flow, Small Footprint, Tall Cabinet	ZX07, ZXA7, ZY05, ZY06, ZQ06	All
2EE04707224	Econ, DB, Horizontal Flow, Large Footprint, Short Cabinet	ZX08, ZY07, ZYA7	All
2EE04707324	Econ, DB, Horizontal Flow, Large Footprint, Tall Cabinet	ZX09, ZX12, ZX14, ZY08, ZY09, ZY12, ZL08, ZL09, ZL12, ZL14	All
1FA0415	Manual Outside Air Damper 0-35%	ZY04, ZY05, ZY06, ZQ04, ZQ05, ZQ06, ZXA7	All
1FA0416	Manual Outside Air Damper 0-35%	ZX08, ZX09, ZX12, ZX14, ZY07, ZYA7, ZY08, ZY09, ZY12, ZL08, ZL09, ZL12, ZL14	All
1FA0417	Manual Outside Air Damper 0-100%	ZY04, ZY05, ZY06, ZQ04, ZQ05, ZQ06, ZXA7	All
1FA0418	Manual Outside Air Damper 0-100%	ZX08, ZX09, ZX12, ZX14, ZY07, ZYA7, ZY08, ZY09, ZY12, ZL08, ZL09, ZL12, ZL14	All
2MD04704224	Motorized Outside Air Damper 0-100%	ZY04, ZY05, ZY06, ZXA7	All
2MD04704324	Motorized Outside Air Damper 0-100%	ZX08, ZX09, ZX12, ZX14, ZY07, ZYA7, ZY08, ZY09, ZY12, ZL08, ZL09, ZL12, ZL14	All
2EC0401	Kit, Single Enthalpy Field Installed	All	All
2EC0402	Kit, Dual Enthalpy Field Installed	All	All
1HD0401	Hinged Filter Access Panel For Units With A Horizontal Economizer	ZQ04, ZQ05, ZY04	All
1HD0402	Hinged Filter Access Panel For Units With A Horizontal Economizer	ZQ06, ZY05, ZY06, ZXA7	All
1HD0403	Hinged Filter Access Panel For Units With A Horizontal Economizer	ZX08, ZY07, ZYA7	All
1HD0404	Hinged Filter Access Panel For Units With A Horizontal Economizer	ZX09, ZX12, ZX14, ZY08, ZY09, ZY12, ZL08, ZL09, ZL12, ZL14	All
1HG0419	Hail Guard Kit Small Footprint, Short Cabinet	ZY04, ZQ04, ZQ05	All
1HG0420	Hail Guard Kit Small Footprint, Tall Cabinet	ZY05, ZY06, ZQ06, ZXA7	All
1HG0423	Hail Guard Kit Large Footprint, Short Cabinet	ZX08, ZY07, ZYA7	All
1HG0424	Hail Guard Kit Large Footprint, Tall Cabinet	ZX09, ZX12, ZX14, ZY08, ZY09, ZY12, ZL08, ZL09, ZL12, ZL14	All
1RC0456	Curb Rigid 14" Small Footprint	ZY04, ZY05, ZY06, ZQ04, ZQ05, ZQ06, ZXA7	All
1RC0457	Curb Rigid 14" Large Footprint	ZX08, ZX09, ZX12, ZX14, ZY07, ZYA7, ZY08, ZY09, ZY12, ZL08, ZL09, ZL12, ZL14	All
1RC0458	Curb Rigid 24" Small Footprint	ZY04, ZY05, ZY06, ZQ04, ZQ05, ZQ06, ZXA7	All
1RC0459	Curb Rigid 24" Large Footprint	ZX08, ZX09, ZX12, ZX14, ZY07, ZYA7, ZY08, ZY09, ZY12, ZL08, ZL09, ZL12, ZL14	All
2PE04704206	Power Exhaust Vert Flow Small Footprint 208V-230V 1-ph	ZY04, ZY05, ZY06, ZQ04, ZQ05, ZQ06, ZXA7	208/230-1-60
2PE04704225	Power Exhaust Vert Flow Small Footprint 208V-230V 3-ph	ZY04, ZY05, ZY06, ZQ04, ZQ05, ZQ06, ZXA7	208/230-3-60
2PE04704246	Power Exhaust Vert Flow Small Footprint 460V 3-ph	ZY04, ZY05, ZY06, ZQ04, ZQ05, ZQ06, ZXA7	460-3-60
2PE04704258	Power Exhaust Vert Flow Small Footprint 575V 3-ph	ZY04, ZY05, ZY06, ZQ04, ZQ05, ZQ06, ZXA7	575-3-60
2PE04704306	Power Exhaust Vert Flow Large Footprint 208V-230V 1-ph	ZX08, ZX09, ZX12, ZX14, ZY07, ZYA7, ZY08, ZY09, ZY12, ZL08, ZL09, ZL12, ZL14	208/230-1-60
2PE04704325	Power Exhaust Vert Flow Large Footprint 208V-230V 3-ph	ZX08, ZX09, ZX12, ZX14, ZY07, ZYA7, ZY08, ZY09, ZY12, ZL08, ZL09, ZL12, ZL14	208/230-3-60
2PE04704346	Power Exhaust Vert Flow Large Footprint 460V 3-ph	ZX08, ZX09, ZX12, ZX14, ZY07, ZYA7, ZY08, ZY09, ZY12, ZL08, ZL09, ZL12, ZL14	460-3-60

Accessories (Continued)

Accessory Kit Number	Description	Where Used	Voltage
2PE04704358	Power Exhaust Vert Flow Large Footprint 575V 3-ph	ZX08, ZX09, ZX12, ZX14, ZY07, ZYA7, ZY08, ZY09, ZY12, ZL08, ZL09, ZL12, ZL14	575-3-60
2PE04704406	Power Exhaust Horiz Flow Small Footprint 208V-230V 1-ph	ZY04, ZY05, ZY06, ZQ04, ZQ05, ZQ06, ZXA7	208/230-1-60
2PE04704425	Power Exhaust Horiz Flow Small Footprint 208V-230V 3-ph	ZY04, ZY05, ZY06, ZQ04, ZQ05, ZQ06, ZXA7	208/230-3-60
2PE04704446	Power Exhaust Horiz Flow Small Footprint 460V 3-ph	ZY04, ZY05, ZY06, ZQ04, ZQ05, ZQ06, ZXA7	460-3-60
2PE04704458	Power Exhaust Horiz Flow Small Footprint 575V 3-ph	ZY04, ZY05, ZY06, ZQ04, ZQ05, ZQ06, ZXA7	575-3-60
2PE04704506	Power Exhaust Horiz Flow Large Footprint 208V-230V 1-ph	ZX08, ZX09, ZX12, ZX14, ZY07, ZYA7, ZY08, ZY09, ZY12, ZL08, ZL09, ZL12, ZL14	208/230-1-60
2PE04704525	Power Exhaust Horiz Flow Large Footprint 208V-230V 3-ph	ZX08, ZX09, ZX12, ZX14, ZY07, ZYA7, ZY08, ZY09, ZY12, ZL08, ZL09, ZL12, ZL14	208/230-3-60
2PE04704546	Power Exhaust Horiz Flow Large Footprint 460V 3-ph	ZX08, ZX09, ZX12, ZX14, ZY07, ZYA7, ZY08, ZY09, ZY12, ZL08, ZL09, ZL12, ZL14	460-3-60
2PE04704558	Power Exhaust Horiz Flow Large Footprint 575V 3-ph	ZX08, ZX09, ZX12, ZX14, ZY07, ZYA7, ZY08, ZY09, ZY12, ZL08, ZL09, ZL12, ZL14	575-3-60
1HA0454	High Altitude Kit for Natural Gas (2,000-10,000 ft)	ZY04, ZY05, ZY06, ZQ04, ZQ05, ZQ06, ZXA7 - Low, Med, High Heat ZY07, ZYA7 - Low Heat	All
1HA0455	High Altitude Kit for Natural Gas (2,000-10,000 ft)	ZX08, ZX09, ZX12, ZX14, ZY08, ZY09, ZY12, ZL08, ZL09, ZL12, ZL14 - Low, Med, High Heat ZY07, ZYA7 - Med, High Heat	All
1NP0456	Propane Conversion Kit Note: Not for use with Low NOx	ZY04, ZY05, ZY06, ZQ04, ZQ05, ZQ06, ZXA7 - Low, Med, High Heat ZY07, ZYA7 - Low Heat	All
1NP0457	Propane Conversion Kit	ZX08, ZX09, ZX12, ZX14, ZY08, ZY09, ZY12, ZL08, ZL09, ZL12, ZL14 - Low, Med, High Heat ZY07, ZYA7 - Med, High Heat	All
1HA0458	High Altitude Kit for Propane (2,000-10,000 ft) Note: Not for use with Low NOx	ZY04, ZY05, ZY06, ZQ04, ZQ05, ZQ06, ZXA7 - Low, Med, High Heat ZY07, ZYA7 - Low Heat	All
1HA0459	High Altitude Kit for Propane (2,000-10,000 ft)	ZX08, ZX09, ZX12, ZX14, ZY08, ZY09, ZY12, ZL08, ZL09, ZL12, ZL14 - Low, Med, High Heat ZY07, ZYA7 - Med, High Heat	All
1FE0414	Flue Exhaust Kit	ZYG04, ZQG04, ZQG05	All
1FE0415	Flue Exhaust Kit	ZXGA7, ZXG08, ZYG05, ZYG06, ZYG07, ZYGA7, ZQG06	All
1FE0416	Flue Exhaust Kit	ZXG09, ZXG12, ZXG14, ZYG08, ZYG09, ZYG12, ZL08, ZL09, ZL12, ZL14	All
1HS0401	Flue Heat Shield Accessory	ZQ04, ZQ05, ZQ06, ZXA7, ZX08, ZX09, ZX12, ZX14, ZY04, ZY05, ZY06, ZY07, ZYA7, ZY08, ZY09, ZY12, ZL08, ZL09, ZL12, ZL14	All
2EK04510625	6.5 KW Electric Heat	ZY04, ZY05, ZY06, ZQ04, ZQ05, ZQ06, ZXA7	208/230-(1 or 3)-60
2EK04510646	6.0 KW Electric Heat	ZY04, ZY05, ZY06, ZQ04, ZQ05, ZQ06, ZXA7	460-3-60
2EK04510725	6.5 KW Electric Heat	ZY07, ZYA7	208/230-3-60
2EK04510746	6.0 KW Electric Heat	ZY07, ZYA7	460-3-60
2EK04511058	9.2 KW Electric Heat	ZY04, ZY05, ZQ04, ZQ05	575-3-60
2EK04511125	10.5 KW Electric Heat	ZY04, ZY05, ZY06, ZQ04, ZQ05, ZQ06, ZXA7	208/230-(1 or 3)-60
2EK04511146	11.5 KW Electric Heat	ZY04, ZY05, ZY06, ZQ04, ZQ05, ZQ06, ZXA7	460-3-60

Accessories (Continued)

Accessory Kit Number	Description	Where Used	Voltage
2EK04511458	13.8 KW Electric Heat	ZY04, ZY05, ZY06, ZQ04, ZQ05, ZQ06	575-3-60
2EK04511446	14 KW Electric Heat	ZY04, ZY05, ZY06, ZQ04, ZQ05, ZQ06, ZXA7	460-3-60
2EK04511625	16 KW Electric Heat	ZY04, ZY05, ZY06, ZQ04, ZQ05, ZQ06, ZXA7	208/230-3-60
2EK04511725	16 KW Electric Heat	ZX08, ZX09, ZX12, ZX14, ZY07, ZYA7, ZY08, ZY09, ZY12, ZL08, ZL09, ZL12, ZL14	208/230-3-60
2EK04511746	16.5 KW Electric Heat	ZX08, ZX09, ZX12, ZX14, ZY07, ZYA7, ZY08, ZY09, ZY12, ZL08, ZL09, ZL12, ZL14	460-3-60
2EK04511758	17 KW Electric Heat	ZX08, ZX09, ZX12, ZX14, ZY07, ZYA7, ZY08, ZY09, ZL08, ZL09, ZL14	575-3-60
2EK04512358	23 KW Electric Heat	ZX06, ZY06, ZQ06	575-3-60
2EK04510625	6.5 KW Electric Heat	ZY04, ZY05, ZY06, ZQ04, ZQ05, ZQ06, ZXA7	208/230-(1 or 3)-60
2EK04512525	24.8 KW Electric Heat	ZX08, ZX09, ZX12, ZX14, ZY07, ZYA7, ZY08, ZY09, ZY12, ZL08, ZL09, ZL12, ZL14	208/230-3-60
2EK04512646	25.5KW Electric Heat	ZY07, ZYA7	460-3-60
2EK04512658	25.7KW Electric Heat	ZY07, ZYA7	575-3-60
2EK04512846	27.8 KW Electric Heat	ZX08, ZX09, ZX12, ZX14, ZY08, ZY09, ZY12, ZL08, ZL09, ZL12, ZL14	460-3-60
2EK04513225	32 KW Electric Heat	ZX08, ZX09, ZX12, ZX14, ZY08, ZY09, ZY12, ZL08, ZL09, ZL12, ZL14	208/230-3-60
2EK04513346	33 KW Electric Heat	ZX08, ZX09, ZX12, ZX14, ZY08, ZY09, ZY12, ZL08, ZL09, ZL12, ZL14	460-3-60
2EK04513458	34 KW Electric Heat	ZX08, ZX09, ZX12, ZX14, ZY08, ZY09, ZL08, ZL09, ZL14	575-3-60
2EK04514225	42.4 KW Electric Heat	ZX08, ZX09, ZX12, ZX14, ZY08, ZY09, ZY12, ZL08, ZL09, ZL12, ZL14	208/230-3-60
2EK04514246	41.7 KW Electric Heat	ZX08, ZX09, ZX12, ZX14, ZY08, ZY09, ZY12, ZL08, ZL09, ZL12, ZL14	460-3-60
2LA04704725	Low Ambient Accessory Kit	ZY04, ZY05, ZY06, ZQ04, ZQ05, ZQ06, ZXA7	208V/230V-1-60 or 208V/230V-3-60
2LA04704746	Low Ambient Accessory Kit	ZY04, ZY05, ZY07, ZYA7, ZQ04, ZQ05, ZQ06, ZXA7	460V-3-60
2LA04704758	Low Ambient Accessory Kit	ZY04, ZY05, ZY08, ZQ04, ZQ05, ZQ06, ZXA7	575V-3-60
2LA04704825	Low Ambient Accessory Kit	ZX08, ZX09, ZX12, ZY07, ZYA7, ZY08, ZY09, ZL08, ZL09	208V/230V-1-60 or 208V/230V-3-60
2LA04704846	Low Ambient Accessory Kit	ZX08, ZX09, ZX12, ZY07, ZYA7, ZY08, ZY09, ZL08, ZL09	460V-3-60
2LA04704858	Low Ambient Accessory Kit	ZX08, ZX09, ZX12, ZY07, ZYA7, ZY08, ZY09, ZL08, ZL09	575V-3-60
2LA04704925	Low Ambient Accessory Kit	ZX14, ZY12, ZL12, ZL14	208V/230V-3-60
2LA04704946	Low Ambient Accessory Kit	ZX14, ZY12, ZL12, ZL14	460V-3-60
2LA04704958	Low Ambient Accessory Kit	ZX14, ZY12, ZL12, ZL14	575V-3-60
2SD04701224	Supply Air Stream Smoke Detector	ZXA7, ZX08, ZX09, ZX12, ZX14, ZY04, ZY05, ZY06, ZY07, ZYA7, ZY08, ZY09, ZY12, ZQ04, ZQ05, ZQ06, ZL08, ZL09, ZL12, ZL14	All
2SD04701124	Return Air Stream Smoke Detector	ZY04, ZY05, ZY06, ZQ04, ZQ05, ZQ06, ZXA7	All
2SD04701424	Return Air Stream Smoke Detector	ZX08, ZX09, ZX12, ZX14, ZY07, ZYA7, ZY08, ZY09, ZY12, ZL08, ZL09, ZL12, ZL14	All
2SD04701324	Combination Supply & Return Air Stream Smoke Detector	ZY04, ZY05, ZY06, ZQ04, ZQ05, ZQ06, ZXA7	All
2SD04701624	Combination Supply & Return Air Stream Smoke Detector	ZX08, ZX09, ZX12, ZX14, ZY07, ZYA7, ZY08, ZY09, ZY12, ZL08, ZL09, ZL12, ZL14	All
1TB0401	Small Footprint Thru The Base Electrical & Thru The Curb Gas	ZY04, ZY05, ZY06, ZQ04, ZQ05, ZQ06, ZXA7	All

Accessories (Continued)

Accessory Kit Number	Description	Where Used	Voltage
1TB0402	Large Footprint Thru The Base Electrical & Thru The Curb Gas	ZX08, ZX09, ZX12, ZX14, ZY07, ZYA7, ZY08, ZY09, ZY12, ZL08, ZL09, ZL12, ZL14	All
1TB0403	Small Footprint Thru The Base Electrical & Gas	ZY04, ZY05, ZY06, ZQ04, ZQ05, ZQ06, ZXA7	All
1TB0404	Large Footprint Thru The Base Electrical & Gas	ZX08, ZY07, ZYA7, ZX09, ZX12, ZX14, ZY08, ZY09, ZY12, ZL08, ZL09, ZL12, ZL14	All
1LD0420	High Speed Drive Kit	ZQ05	3-phase only

AHRI Cooling Rating Table

UNIT	COOLING STAGES	NOM. COOLING CAPACITY (TONS)	NET COOLING CAPACITY (MBH)	TOTAL POWER (kW)	SEER	EER (COOLING ONLY)	EER (A/C WITH GAS HEAT)	IEER (COOLING ONLY)	IEER (A/C WITH GAS HEAT)	IEER WITH Intelli*Speed* (COOLING ONLY)	IEER WITH Intelli*Speed* (GAS HEAT)
ZXA7	2	6	67.0	6.0	---	11.2	11.0	12.9	12.9	14.8	14.8
ZX08	2	7.5	85.0	6.6	---	11.2	11.0	N/A	N/A	13.5	13.4
ZX09	2	8.5	99.0	7.7	---	11.2	11.0	N/A	N/A	13.3	13.0
ZX12	2	10.0	116.0	9.2	---	11.2	11.0	N/A	N/A	14.6	14.4
ZX14	2	12.5	135.0	10.8	---	11.0	11.0	N/A	N/A	12.7	12.5
ZY04	1	3	36.0	2.6	15.0	12.0	12.0	---	---	---	---
ZY05	1	4	49.0	3.5	15.4	12.0	12.0	---	---	---	---
ZY06	1	5	58.0	4.4	15.2	12.0	12.0	---	---	---	---
ZY07	1	6	72.0	5.0	---	12.2	12.0	12.9	12.7	---	---
ZYA7	2	6	71.0	5.89	---	12.0	12.0	14.6	14.6	16.0	16.0
ZY08	2	7.5	89.0	6.6	---	12.2	12.0	12.9	12.7	14.1	14.0
ZY09	2	8.5	98.0	7.3	---	12.2	12.0	12.9	12.7	14.8	14.6
ZY12	2	10.0	116.0	8.9	---	11.7	11.5	12.9	12.7	14.0	14.0
ZQ04	1	3	35.0	2.8	14.0	12.2	12.2	---	---	---	---
ZQ05	1	4	48.0	4.0	14.0	12.0	12.0	---	---	---	---
ZQ06	1	5	58.5	4.8	14.1	12.1	12.1	---	---	---	---
ZL08	3	7.5	89.0	7.4	---	12.2	12.0	N/A	N/A	15.8	15.6
ZL09	3	8.5	98.0	8.0	---	12.2	12.0	N/A	N/A	16.3	16.1
ZL12	3	10.0	116.0	9.6	---	12.2	12.0	N/A	N/A	15.6	15.4
ZL14	3	12.5	135.0	11.9	---	11.2	11.0	N/A	N/A	14.9	14.7

AHRI 270 Outdoor Sound Power Levels

Unit (Tons)	Sound Rating[1] (dB-A)	Octave Bands (Hz)							
		63	125	250	500	1000	2000	4000	8000
ZXA7 (6)	79	85.0	85.0	77.0	75.0	74.0	70.0	66.0	62.0
ZX08 (7.5)	84	87.0	86.0	82.0	80.5	79.5	75.0	70.5	66.5
ZX09 (8.5)	83	91.0	86.0	79.0	79.5	78.0	74.0	70.5	69.0
ZX12 (10)	84	87.5	85.0	81.0	80.0	80.0	74.5	70.0	66.5
ZX14 (12.5)	90	87.5	88.5	85.0	86.0	85.0	81.0	78.5	73.0
ZY04 (3)	79	81.0	86.5	77.0	76.0	75.0	70.5	66.5	63.5
ZY05 (4)	79	84.0	83.0	76.0	75.0	74.0	70.0	66.0	63.5
ZY06 (5)	79	83.0	83.0	76.0	75.0	75.0	69.5	66.0	63.0
ZY07 (6)	84	90.0	87.0	81.5	81.0	79.0	74.5	71.0	69.5
ZYA7 (6)	83	85.0	86.0	81.0	80.0	78.0	73.0	70.0	65.0
ZY08 (7.5)	83	91.5	84.5	79.5	79.5	78.5	74.0	68.5	66.0
ZY09 (8.5)	83	92.0	87.0	81.0	80.5	79.0	74.0	69.0	66.0
ZY12 (10)	87	88.0	88.5	84.5	84.0	82.5	78.5	76.0	73.0
ZQ04 (3)	79	81.5	84.5	76.5	75.0	74.0	69.5	65.5	61.0
ZQ05 (4)	79	82.0	85.0	77.5	75.5	74.0	70.0	66.5	62.0
ZQ06 (5)	79	83.0	83.0	76.0	75.0	75.0	69.5	66.0	63.0
ZL08 (7.5)	82	85.0	86.0	80.0	79.0	78.0	73.0	68.0	64.0
ZL09 (8.5)	82	88.5	83.0	81.0	79.0	78.0	73.5	69.0	65.5
ZL12 (10)	86	82.0	88.5	85.0	82.5	80.5	76.0	73.5	69.5
ZL14 (12.5)	86	84.0	88.5	84.5	83.5	81.0	76.5	73.5	69.5

1. Rated in accordance with AHRI 270 standard.

Physical Data

ZXA7 Physical Data

Component		Models			
		ZXGA7			ZXEA7
Nominal Tonnage		6			6
AHRI COOLING PERFORMANCE	Gross Capacity @ AHRI A point (Btu)	70000			70000
	AHRI net capacity (Btu)	67000			67000
	EER	11.0			11.2
	SEER	-			-
	IEER	12.9			12.9
	IEER Intelli*Speed*	14.8			14.8
	Nominal CFM	2200			2200
	System power (KW)	6.0			6.0
	Refrigerant type	R-410A			R-410A
	Refrigerant charge (lb-oz)				
	System 1	7-4			7-4
	System 2				
AHRI HEATING PERFORMANCE	Heating Option	D	E	F	-
	Heating model	Low	Med	High	-
	1st. Stage Heat input (K Btu)	-	-	100	-
	2nd. Stage Heat input (K Btu)	70	114	145	-
	1st. Stage Heat output (K Btu)	-	-	80	-
	2nd. Stage Heat output (K Btu)	56	91	116	-
	AFUE %				-
	Steady state efficiency (%)	80	80	80	-
	No. burners	2	3	3	-
	No. stages	1	1	2	-
	Temperature Rise Range (ºF)	17-29	28-47	36-60	-
	Gas Limit Setting (ºF)	150	140	140	-
	Gas piping connection (in.)	1/2	1/2	1/2	-
DIMENSIONS (inches)	Length	74.1			74.1
	Width	48.9			48.9
	Height	40.6			40.6
OPERATING WT. (lbs.)		668			614
COMPRESSORS	Type	2-Stage Scroll			2-Stage Scroll
	Quantity	1			1
	Unit Capacity Steps (%)	67/100			67/100
CONDENSER COIL DATA	Face area (Sq. Ft.)	21.1			21.1
	Rows	1			1
	Fins per inch	23			23
	Tube diameter (in./MM)	.79/20			.79/20
	Circuitry Type	2-pass Microchannel			2-pass Microchannel
EVAPORATOR COIL DATA	Face area (Sq. Ft.)	7.3			7.3
	Rows	4			4
	Fins per inch	15			15
	Tube diameter	0.375			0.375
	Circuitry Type	Intertwined			Intertwined
	Refrigerant control	TXV			TXV

ZXA7 Physical Data (Continued)

Component		Models					
		ZXGA7			ZXEA7		
Nominal Tonnage		6			6		
CONDENSER FAN DATA	Quantity of fans	1			1		
	Fan diameter (Inch)	22			22		
	Type	Prop			Prop		
	Drive type	Direct			Direct		
	Quantity of motors	1			1		
	Motor HP each	1/2			1/2		
	No. speeds	2			2		
	RPM	900 / 1150			900 / 1150		
	Nominal total CFM	3600 / 4600			3600 / 4600		
EVAP FAN DATA BELT DRIVE	Airflow Option	A	B	C	A	B	C
	Quantity	1	1	1	1	1	1
	Fan Size (Inch)	11 x 10	11 x 10	11 x 10	11 x 10	11 x 10	11 x 10
	Type	Centrifugal			Centrifugal		
	Motor Sheave	1VL34	1VL44	1VP50	1VL34	1VL44	1VP50
	Blower Sheave	AK51	AK51	AK51	AK51	AK51	AK51
	Belt	A39	A40	A41	A39	A40	A41
	Motor Max Bhp, 3 Phase	2.4	2.9	3.7	2.4	2.9	3.7
	RPM	1725	1725	1725	1725	1725	1725
	Frame size	56Y	56Y	56HZ	56Y	56Y	56HZ
FILTERS	Quantity - Size	4 - (16 x 16 x 2)[1]			4 - (16 x 16 x 2)[1]		

1. 2 in. Throwaway, Standard, MERV 4 (Minimum Efficiency Reporting Value).

ZX08 Physical Data

Component		Models			
		ZXG08			ZXE08
Nominal Tonnage		7.5			7.5
AHRI COOLING PERFORMANCE	Gross Capacity @ AHRI A point (Btu)	94000			94000
	AHRI net capacity (Btu)	85000			85000
	EER	11			11.2
	SEER	-			-
	IEER Intelli*Speed*	13.4			13.5
	Nominal CFM	2900			2900
	System power (KW)	6.6			6.6
	Refrigerant type	R-410A			R-410A
	Refrigerant charge (lb-oz)				
	System 1	4-8			4-8
	System 2	4-12			4-12
AHRI HEATING PERFORMANCE	Heating Option	D	E	F	-
	Heating model	Low	Med	High	-
	1st. Stage Heat input (K Btu)	90	125	176	-
	2nd. Stage Heat input (K Btu)	125	180	220	-
	1st. Stage Heat output (K Btu)	72	100	141	-
	2nd. Stage Heat output (K Btu)	100	144	176	-
	AFUE %				-
	Steady state efficiency (%)	80	80	80	-
	No. burners	3	4	5	-
	No. stages	2	2	2	-
	Temperature Rise Range (ºF)	25-41	36-59	43-72	-
	Gas Limit Setting (ºF)	140	150	140	-
	Gas piping connection (in.)	3/4	3/4	3/4	-
DIMENSIONS (inches)	Length	87.1			87.1
	Width	61.7			61.7
	Height	40.6			40.6
OPERATING WT. (lbs.)		893			791
COMPRESSORS	Type	Scroll			Scroll
	Quantity	2			2
	Unit Capacity Steps (%)	50/100			50/100
CONDENSER COIL DATA	Face area (Sq. Ft.)	21.1			21.1
	Rows	1			1
	Fins per inch	23			23
	Tube diameter (in./MM)	1/25			1/25
	Circuitry Type	2-pass Microchannel			2-pass Microchannel
EVAPORATOR COIL DATA	Face area (Sq. Ft.)	8.9			8.9
	Rows	3			3
	Fins per inch	15			15
	Tube diameter	0.375			0.375
	Circuitry Type	Intertwined			Intertwined
	Refrigerant control	Orifice			Orifice

ZX08 Physical Data (Continued)

Component		Models					
		ZXG08			ZXE08		
Nominal Tonnage		7.5			7.5		
CONDENSER FAN DATA	Quantity of fans	2			2		
	Fan diameter (Inch)	22			22		
	Type	Prop			Prop		
	Drive type	Direct			Direct		
	Quantity of motors	2			2		
	Motor HP each	1/2			1/2		
	No. speeds	1			1		
	RPM	1085			1085		
	Nominal total CFM	7600			7600		
EVAP FAN DATA BELT DRIVE	Airflow Option	A	B	C	A	B	C
	Quantity	1	1	1	1	1	1
	Fan Size (Inch)	15 X 15	15 X 15	15 X 15	15 X 15	15 X 15	15 X 15
	Type	Centrifugal			Centrifugal		
	Motor Sheave	1VL34	1VL44	1VP50	1VL34	1VL44	1VP50
	Blower Sheave	AK74	AK74	AK74	AK74	AK74	AK74
	Belt	A47	A48	A48	A47	A48	A48
	Motor Max Bhp, 3 Phase	2.4	2.9	3.7	2.4	2.9	3.7
	RPM	1725	1725	1725	1725	1725	1725
	Frame size	56Y	56Y	56HZ	56Y	56Y	56HZ
FILTERS	Quantity - Size	4 - (16 x 20 x 2)[1]			4 - (16 x 20 x 2)[1]		

1. 2 in. Throwaway, Standard, MERV 4 (Minimum Efficiency Reporting Value).

ZX09 Physical Data

Component		Models			
		ZXG09			ZXE09
Nominal Tonnage		8.5			8.5
AHRI COOLING PERFORMANCE	Gross Capacity @ AHRI A point (Btu)	105600			105600
	AHRI net capacity (Btu)	99000			99000
	EER	11			11.2
	SEER	-			-
	IEER Intelli*Speed*	13.0			13.3
	Nominal CFM	3300			3300
	System power (KW)	7.70			7.70
	Refrigerant type	R-410A			R-410A
	Refrigerant charge (lb-oz)				
	System 1	5-4			5-4
	System 2	5-4			5-4
AHRI HEATING PERFORMANCE	Heating Option	D	E	F	-
	Heating model	Low	Med	High	-
	1st. Stage Heat input (K Btu)	90	125	176	-
	2nd. Stage Heat input (K Btu)	125	180	220	-
	1st. Stage Heat output (K Btu)	72	100	141	-
	2nd. Stage Heat output (K Btu)	100	144	176	-
	AFUE %				-
	Steady state efficiency (%)	80	80	80	-
	No. burners	3	4	5	-
	No. stages	2	2	2	-
	Temperature Rise Range (ºF)	22-36	31-52	38-64	-
	Gas Limit Setting (ºF)	140	150	140	-
	Gas piping connection (in.)	3/4	3/4	3/4	-
DIMENSIONS (inches)	Length	87.2			87.2
	Width	61.7			61.7
	Height	48.6			48.6
OPERATING WT. (lbs.)		954			852
COMPRESSORS	Type	Scroll			Scroll
	Quantity	2			2
	Unit Capacity Steps (%)	50/100			50/100
CONDENSER COIL DATA	Face area (Sq. Ft.)	25.5			25.5
	Rows	1			1
	Fins per inch	23			23
	Tube diameter (in./MM)	1/25			1/25
	Circuitry Type	2-pass Microchannel			2-pass Microchannel
EVAPORATOR COIL DATA	Face area (Sq. Ft.)	11.1			11.1
	Rows	3			3
	Fins per inch	15			15
	Tube diameter	0.375			0.375
	Circuitry Type	Intertwined			Intertwined
	Refrigerant control	Orifice			Orifice

ZX09 Physical Data (Continued)

Component		Models					
		ZXG09			ZXE09		
Nominal Tonnage		8.5			8.5		
CONDENSER FAN DATA	Quantity of fans	2			2		
	Fan diameter (Inch)	22			22		
	Type	Prop			Prop		
	Drive type	Direct			Direct		
	Quantity of motors	2			2		
	Motor HP each	1/2			1/2		
	No. speeds	1			1		
	RPM	1085			1085		
	Nominal total CFM	8600			8600		
EVAP FAN DATA BELT DRIVE	Airflow Option	A	B	C	A	B	C
	Quantity	1	1	1	1	1	1
	Fan Size (Inch)	15 x 15	15 x 15	15 x 15	15 x 15	15 x 15	15 x 15
	Type	Centrifugal			Centrifugal		
	Motor Sheave	1VL34	1VL44	1VP50	1VL34	1VL44	1VP50
	Blower Sheave	AK74	AK74	AK74	AK74	AK74	AK74
	Belt	A47	A48	A50	A47	A48	A50
	Motor Max Bhp, 3 Phase	2.4	2.4	3.7	2.4	2.4	3.7
	RPM	1725	1725	1725	1725	1725	1725
	Frame size	56Y	56Y	56HZ	56Y	56Y	56HZ
FILTERS	Quantity - Size	4 - (20 x 20 x 2)[1]			4 - (20 x 20 x 2)[1]		

1. 2 in. Throwaway, Standard, MERV 4 (Minimum Efficiency Reporting Value).

ZX12 Physical Data

Component		Models			
		ZXG12			ZXE12
Nominal Tonnage		10			10
AHRI COOLING PERFORMANCE	Gross Capacity @ AHRI A point (Btu)	125600			125600
	AHRI net capacity (Btu)	116000			116000
	EER	11			11.2
	SEER	-			-
	IEER Intelli*Speed*	14.4			14.6
	Nominal CFM	3400			3400
	System power (KW)	9.2			9.2
	Refrigerant type	R-410A			R-410A
	Refrigerant charge (lb-oz)				
	System 1	5-12			5-12
	System 2	5-12			5-12
AHRI HEATING PERFORMANCE	Heating Option	D	E	F	-
	Heating model	Low	Med	High	-
	1st. Stage Heat input (K Btu)	125	176	200	-
	2nd. Stage Heat input (K Btu)	180	220	250	-
	1st. Stage Heat output (K Btu)	100	141	160	-
	2nd. Stage Heat output (K Btu)	144	176	200	-
	AFUE %				-
	Steady state efficiency (%)	80	80	80	-
	No. burners	4	5	5	-
	No. stages	2	2	2	-
	Temperature Rise Range (ºF)	27-44	33-54	37-62	-
	Gas Limit Setting (ºF)	150	140	160	-
	Gas piping connection (in.)	3/4	3/4	3/4	-
DIMENSIONS (inches)	Length	87.2			87.2
	Width	61.7			61.7
	Height	48.6			48.6
OPERATING WT. (lbs.)		985			879
COMPRESSORS	Type	Scroll			Scroll
	Quantity	2			2
	Unit Capacity Steps (%)	50/100			50/100
CONDENSER COIL DATA	Face area (Sq. Ft.)	25.5			25.5
	Rows	1			1
	Fins per inch	23			23
	Tube diameter (in./MM)	1/25			1/25
	Circuitry Type	2-pass Microchannel			2-pass Microchannel
EVAPORATOR COIL DATA	Face area (Sq. Ft.)	11.1			11.1
	Rows	4			4
	Fins per inch	15			15
	Tube diameter	0.375			0.375
	Circuitry Type	Intertwined			Intertwined
	Refrigerant control	Orifice			Orifice

ZX12 Physical Data (Continued)

Component		Models					
		ZXG12			ZXE12		
Nominal Tonnage		10			10		
CONDENSER FAN DATA	Quantity of fans	2			2		
	Fan diameter (Inch)	22			22		
	Type	Prop			Prop		
	Drive type	Direct			Direct		
	Quantity of motors	2			2		
	Motor HP each	1/2			1/2		
	No. speeds	1			1		
	RPM	1085			1085		
	Nominal total CFM	8600			8600		
EVAP FAN DATA BELT DRIVE	Airflow Option	A	B	C	A	B	C
	Quantity	1	1	1	1	1	1
	Fan Size (Inch)	15 x 15	15 x 15	15 x 15	15 x 15	15 x 15	15 x 15
	Type	Centrifugal			Centrifugal		
	Motor Sheave	1VL44	1VP50	1VP56	1VL44	1VP50	1VP56
	Blower Sheave	AK79	AK79	BK85	AK79	AK79	BK85
	Belt	A50	A50	BX52	A50	A50	BX52
	Motor Max Bhp, 3 Phase	2.4	3.7	5.25	2.4	3.7	5.25
	RPM	1725	1725	1725	1725	1725	1725
	Frame size	56Y	56HZ	145TY	56Y	56HZ	145TY
FILTERS	Quantity - Size	4 - (20 x 20 x 2)[1]			4 - (20 x 20 x 2)[1]		

1. 2 in. Throwaway, Standard, MERV 4 (Minimum Efficiency Reporting Value).

ZX14 Physical Data

Component		Models			
		ZXG14			ZXE14
Nominal Tonnage		12.5			12.5
AHRI COOLING PERFORMANCE	Gross Capacity @ AHRI A point (Btu)	145000			145000
	AHRI net capacity (Btu)	135000			135000
	EER	11.0			11.0
	SEER	-			-
	IEER Intelli*Speed*	12.5			12.7
	Nominal CFM	4000			4000
	System power (KW)	10.8			10.8
	Refrigerant type	R-410A			R-410A
	Refrigerant charge (lb-oz)				
	System 1	6-8			6-8
	System 2	6-12			6-12
AHRI HEATING PERFORMANCE	Heating Option	D	E	F	-
	Heating model	Low	Med	High	-
	1st. Stage Heat input (K Btu)	125	176	200	-
	2nd. Stage Heat input (K Btu)	180	220	250	-
	1st. Stage Heat output (K Btu)	100	141	160	-
	2nd. Stage Heat output (K Btu)	144	176	200	-
	AFUE %				-
	Steady state efficiency (%)	80	80	80	-
	No. burners	4	5	5	-
	No. stages	2	2	2	-
	Temperature Rise Range (ºF)	21-36	26-43	30-49	-
	Gas Limit Setting (ºF)	150	140	160	-
	Gas piping connection (in.)	3/4	3/4	3/4	-
DIMENSIONS (inches)	Length	87.2			87.2
	Width	61.7			61.7
	Height	55.26			55.26
OPERATING WT. (lbs.)		1047			941
COMPRESSORS	Type	Scroll			Scroll
	Quantity	2			2
	Unit Capacity Steps (%)	50/100			50/100
CONDENSER COIL DATA	Face area (Sq. Ft.)	24.9			24.9
	Rows	1			1
	Fins per inch	21			21
	Tube diameter (in./MM)	1.26/32			1.26/32
	Circuitry Type	2-pass Microchannel			2-pass Microchannel
EVAPORATOR COIL DATA	Face area (Sq. Ft.)	11.1			11.1
	Rows	4			4
	Fins per inch	15			15
	Tube diameter	0.375			0.375
	Circuitry Type	Intertwined			Intertwined
	Refrigerant control	TXV			TXV

ZX14 Physical Data (Continued)

Component		Models					
		ZXG14			ZXE14		
Nominal Tonnage		12.5			12.5		
CONDENSER FAN DATA	Quantity of fans	1			1		
	Fan diameter (Inch)	30			30		
	Type	Prop			Prop		
	Drive type	Direct			Direct		
	Quantity of motors	1			1		
	Motor HP each	1 1/2			1 1/2		
	No. speeds	1			1		
	RPM	1140			1140		
	Nominal total CFM	10600			10600		
EVAP FAN DATA BELT DRIVE	Airflow Option	A	B	C	A	B	C
	Quantity	1	1	1	1	1	1
	Fan Size (Inch)	15 x 15	15 x 15	15 x 15	15 x 15	15 x 15	15 x 15
	Type	Centrifugal			Centrifugal		
	Motor Sheave	1VL44	1VP50	1VP56	1VL44	1VP50	1VP56
	Blower Sheave	AK79	AK79	BK85	AK79	AK79	BK85
	Belt	A50	A52	BX54	A50	A52	BX54
	Motor Max Bhp, 3 Phase	2.9	3.7	5.25	2.9	3.7	5.25
	RPM	1750	1750	1750	1750	1750	1750
	Frame size	56Z	184TZ	184TZ	56Z	184TZ	184TZ
FILTERS	Quantity - Size	4 - (20 x 20 x 2)[1]			4 - (20 x 20 x 2)[1]		

1. 2 in. Throwaway, Standard, MERV 4 (Minimum Efficiency Reporting Value).

ZY04 Physical Data

Component		Models				
		ZYG04				ZYE04
Nominal Tonnage		3				3
AHRI COOLING PERFORMANCE	Gross Capacity @ AHRI A point (Btu)	40700				40700
	AHRI net capacity (Btu)	36000				36000
	EER	12				12
	SEER	15				15
	IEER	-				-
	IEER Intelli*Speed*	-				-
	Nominal CFM	1200				1200
	System power (KW)	2.60				2.60
	Refrigerant type	R-410A				R-410A
	Refrigerant charge (lb-oz)					
	System 1	4-10				4-10
	System 2	-				-
AHRI HEATING PERFORMANCE SINGLE PHASE	Heating Option	L	D	M	E	-
	Heating model	Low (Low-NOx)	Low	Med (Low-NOx)	Med	-
	1st. Stage Heat input (K Btu)	-	-	-	-	-
	2nd. Stage Heat input (K Btu)	56	70	90	112	-
	1st. Stage Heat output (K Btu)	-	-	-	-	-
	2nd. Stage Heat output (K Btu)	45	56	72	90	-
	AFUE %	-	-	-	81	-
	FER Compliant	-	-	-	Yes	-
	No. burners	2	2	3	3	-
	No. stages	1	1	1	1	-
	Temperature Rise Range (ºF)	10-40	20-50	35-65	50-80	-
	Gas Limit Setting (ºF)	150	150	140	140	-
	Gas piping connection (in.)	1/2	1/2	1/2	1/2	-
AHRI HEATING PERFORMANCE THREE PHASE	Heating Option	L	D	M	E	-
	Heating model	Low (Low-NOx)	Low	Med (Low-NOx)	Med	-
	1st. Stage Heat input (K Btu)	-	49	-	82	-
	2nd. Stage Heat input (K Btu)	56	70	90	112	-
	1st. Stage Heat output (K Btu)	-	39	-	66	-
	2nd. Stage Heat output (K Btu)	45	56	72	90	-
	Steady state efficiency (%)	80	80	80	80	-
	No. burners	2	2	3	3	-
	No. stages	1	2	1	2	-
	Temperature Rise Range (ºF)	28-46	35-58	44-74	55-78	-
	Gas Limit Setting (ºF)	150	150	140	140	-
	Gas piping connection (in.)	1/2	1/2	1/2	1/2	-
DIMENSIONS (inches)	Length	74.1				74.1
	Width	48.9				48.9
	Height	32.5				32.5
OPERATING WT. (lbs.)		527				481
COMPRESSORS	Type	Scroll				Scroll
	Quantity	1				1
	Unit Capacity Steps (%)	100				100

ZY04 Physical Data (Continued)

Component		Models			
		ZYG04		ZYE04	
Nominal Tonnage		3		3	
CONDENSER COIL DATA	Face area (Sq. Ft.)	16.3		16.3	
	Rows	1		1	
	Fins per inch	23		23	
	Tube diameter (in./MM)	.63/16		.63/16	
	Circuitry Type	2-pass Microchannel		2-pass Microchannel	
EVAPORATOR COIL DATA	Face area (Sq. Ft.)	5.5		5.5	
	Rows	3		3	
	Fins per inch	15		15	
	Tube diameter	0.375		0.375	
	Circuitry Type	Intertwined		Intertwined	
	Refrigerant control	TXV		TXV	
CONDENSER FAN DATA	Quantity of fans	1		1	
	Fan diameter (Inch)	22		22	
	Type	Prop		Prop	
	Drive type	Direct		Direct	
	Quantity of motors	1		1	
	Motor HP each	1/4		1/4	
	No. speeds	1		1	
	RPM	1100		1100	
	Nominal total CFM	3800		3800	
EVAP FAN DATA DIRECT DRIVE	Airflow Option	A		A	
	Quantity	1		1	
	Fan Size (Inch)	10 x 10		10 x 10	
	Type	Centrifugal		Centrifugal	
	Motor HP	3/4		3/4	
	RPM	1050		1050	
EVAP FAN DATA BELT DRIVE	Airflow Option	B	C	B	C
	Quantity	1	1	1	1
	Fan Size (Inch)	10 x 10	10 x 10	10 x 10	10 x 10
	Type	Centrifugal		Centrifugal	
	Motor Sheave	1VL34	1VL44	1VL34	1VL44
	Blower Sheave	AK46	AK46	AK46	AK46
	Belt	A39	A40	A39	A40
	Motor Hp, 1 Phase	1.5	-	1.5	-
	Motor Max Bhp, 3 Phase	2.4	2.4	2.4	2.4
	RPM	1725	1725	1725	1725
	Frame size	56Y	56Y	56Y	56Y
FILTERS	Quantity - Size	2 - (16 x 25 x 2)[1]		2 - (16 x 25 x 2)[1]	

1. 2 in. Throwaway, Standard, MERV 4 (Minimum Efficiency Reporting Value).

ZY05 Physical Data

Component		Models	
		ZYG05	ZYE05
Nominal Tonnage		4	4
AHRI COOLING PERFORMANCE	Gross Capacity @ AHRI A point (Btu)	54800	54800
	AHRI net capacity (Btu)	49000	49000
	EER	12	12
	SEER	15.4	15.4
	IEER	-	-
	IEER Intelli*Speed*	-	-
	Nominal CFM	1600	1600
	System power (KW)	3.50	3.50
	Refrigerant type	R-410A	R-410A
	Refrigerant charge (lb-oz)		
	System 1	6-8	6-8
	System 2	-	-

AHRI HEATING PERFORMANCE SINGLE PHASE	Heating Options	L	D	M	E	N	F	-
	Heating model	Low (Low-NOx)	Low	Med (Low-NOx)	Med	High, (Low-NOx)	High	-
	1st. Stage Heat input (K Btu)	-	-	-	-	-	-	-
	2nd. Stage Heat input (K Btu)	56	70	90	112	116	142	-
	1st. Stage Heat output (K Btu)	-	-	-	-	-	-	-
	2nd. Stage Heat output (K Btu)	45	56	72	90	93	114	-
	AFUE %	-	-	-	81	-	-	-
	FER Compliant	-	-	-	Yes	-	-	-
	No. burners	2	2	3	3	3	3	-
	No. stages	1	1	1	1	1	1	-
	Temperature Rise Range (ºF)	05-35	15-45	25-55	40-70	35-65	45-75	-
	Gas Limit Setting (ºF)	150	150	140	140	150	145	-
	Gas piping connection (in.)	1/2	1/2	1/2	1/2	1/2	1/2	-

AHRI HEATING PERFORMANCE THREE PHASE	Heating Options	L	D	M	E	N	F	-
	Heating model	Low (Low-NOx)	Low	Med (Low-NOx)	Med	High, (Low-NOx)	High	-
	1st. Stage Heat input (K Btu)	-	49	-	82	-	100	-
	2nd. Stage Heat input (K Btu)	56	70	90	112	118	145	-
	1st. Stage Heat output (K Btu)	-	39	-	66	-	80	-
	2nd. Stage Heat output (K Btu)	45	56	72	90	94	116	-
	Steady state efficiency (%)	80	80	80	80	80	80	-
	No. burners	2	2	3	3	3	3	-
	No. stages	1	2	1	2	1	2	-
	Temperature Rise Range (ºF)	21-35	26-43	33-56	41-69	44-73	49-77	-
	Gas Limit Setting (ºF)	150	150	140	140	150	145	-
	Gas piping connection (in.)	1/2	1/2	1/2	1/2	1/2	1/2	-

DIMENSIONS (inches)	Length	74.1	74.1
	Width	48.9	48.9
	Height	40.6	40.6
OPERATING WT. (lbs.)		618	564
COMPRESSORS	Type	Scroll	Scroll
	Quantity	1	1
	Unit Capacity Steps (%)	100	100

ZY05 Physical Data (Continued)

Component		Models	
		ZYG05	ZYE05
Nominal Tonnage		4	4
CONDENSER COIL DATA	Face area (Sq. Ft.)	21.1	21.1
	Rows	1	1
	Fins per inch	23	23
	Tube diameter (in./MM)	.79/20	.79/20
	Circuitry Type	2-pass Microchannel	2-pass Microchannel
EVAPORATOR COIL DATA	Face area (Sq. Ft.)	7.3	7.3
	Rows	3	3
	Fins per inch	15	15
	Tube diameter	0.375	0.375
	Circuitry Type	Intertwined	Intertwined
	Refrigerant control	TXV	TXV
CONDENSER FAN DATA	Quantity of fans	1	1
	Fan diameter (Inch)	22	22
	Type	Prop	Prop
	Drive type	Direct	Direct
	Quantity of motors	1	1
	Motor HP each	1/4	1/4
	No. speeds	1	1
	RPM	1100	1100
	Nominal total CFM	4000	4000
EVAP FAN DATA DIRECT DRIVE	Airflow Option	A	A
	Quantity	1	1
	Fan Size (Inch)	10 x 10	10 x10
	Type	Centrifugal	Centrifugal
	Motor HP	1	1
	RPM	1050	1050

EVAP FAN DATA BELT DRIVE	Airflow Option	B	C	B	C
	Quantity	1	1	1	1
	Fan Size (Inch)	10 x 10	10 x 10	10 x 10	10 x 10
	Type	Centrifugal		Centrifugal	
	Motor Sheave	1VL34	1VL44	1VL44	1VL44
	Blower Sheave	AK46	AK46	AK46	AK46
	Belt	A39	A40	A39	A40
	Motor Hp, 1 Phase	1.5	-	1.5	-
	Motor Max Bhp, 3 Phase	2.4	2.9	2.4	2.9
	RPM	1725	1725	1725	1725
	Frame size	56Y	56Y	56Y	56Y
FILTERS	Quantity - Size	4 - (16 x 16 x 2)[1]		4 - (16 x 16 x 2)[1]	

1. 2 in. Throwaway, Standard, MERV 4 (Minimum Efficiency Reporting Value).

ZY06 Physical Data

Component		Models						
		ZYG06						ZYE06
Nominal Tonnage		5						5
AHRI COOLING PERFORMANCE	Gross Capacity @ AHRI A point (Btu)	60000						60000
	AHRI net capacity (Btu)	58000						58000
	EER	12						12
	SEER	15.2						15.2
	IEER	-						-
	IEER Intelli*Speed*	-						-
	Nominal CFM	1600						1600
	System power (KW)	4.40						4.40
	Refrigerant type	R-410A						R-410A
	Refrigerant charge (lb-oz)							
	System 1	7-10						7-10
	System 2	-						-
AHRI HEATING PERFORMANCE SINGLE PHASE	Heating Options	L	D	M	E	N	F	-
	Heating model	Low (Low-NOx)	Low	Med (Low-NOx)	Med	High, (Low-NOx)	High	-
	1st. Stage Heat input (K Btu)	-	-	-	-		-	-
	2nd. Stage Heat input (K Btu)	56	70	90	112	116	142	-
	1st. Stage Heat output (K Btu)	-	-	-	-		-	-
	2nd. Stage Heat output (K Btu)	45	56	72	90	93	114	-
	AFUE %				81			-
	FER Compliant				Yes			-
	No. burners	2	2	3	3	3	3	-
	No. stages	1	1	1	1	1	1	-
	Temperature Rise Range (ºF)	05-35	10-40	15-45	30-60	30-60	40-70	-
	Gas Limit Setting (ºF)	150	150	140	140	145	140	-
	Gas piping connection (in.)	1/2	1/2	1/2	1/2	1/2	1/2	-
AHRI HEATING PERFORMANCE THREE PHASE	Heating Options	L	D	M	E	N	F	-
	Heating model	Low (Low-NOx)	Low	Med (Low-NOx)	Med	High, (Low-NOx)	High	-
	1st. Stage Heat input (K Btu)	-	49	-	82	-	100	-
	2nd. Stage Heat input (K Btu)	56	70	90	112	118	145	-
	1st. Stage Heat output (K Btu)	-	39	-	66	-	80	-
	2nd. Stage Heat output (K Btu)	45	56	72	90	94	116	-
	Steady state efficiency (%)	80	80	80	80	80	80	-
	No. burners	2	2	3	3	3	3	-
	No. stages	1	2	1	2	1	2	-
	Temperature Rise Range (ºF)	17-28	21-35	27-44	33-55	35-58	43-72	-
	Gas Limit Setting (ºF)	150	150	140	140	145	140	-
	Gas piping connection (in.)	1/2	1/2	1/2	1/2	1/2	1/2	-
DIMENSIONS (inches)	Length	74.1						74.1
	Width	48.9						48.9
	Height	40.6						40.6
OPERATING WT. (lbs.)		636						582
COMPRESSORS	Type	Scroll						Scroll
	Quantity	1						1
	Unit Capacity Steps (%)	100						100
CONDENSER COIL DATA	Face area (Sq. Ft.)	21.1						21.1
	Rows	1						1
	Fins per inch	23						23
	Tube diameter (in./MM)	.79/20						.79/20
	Circuitry Type	2-pass Microchannel						2-pass Microchannel

ZY06 Physical Data (Continued)

Component		Models			
		ZYG06		ZYE06	
Nominal Tonnage		5		5	
EVAPORATOR COIL DATA	Face area (Sq. Ft.)	7.3		7.3	
	Rows	4		4	
	Fins per inch	15		15	
	Tube diameter	0.375		0.375	
	Circuitry Type	Intertwined		Intertwined	
	Refrigerant control	TXV		TXV	
CONDENSER FAN DATA	Quantity of fans	1		1	
	Fan diameter (Inch)	22		22	
	Type	Prop		Prop	
	Drive type	Direct		Direct	
	Quantity of motors	1		1	
	Motor HP each	1/2		1/2	
	No. speeds	1		1	
	RPM	1085		1085	
	Nominal total CFM	4600		4600	
EVAP FAN DATA DIRECT DRIVE	Airflow Option	A		A	
	Quantity	1		1	
	Fan Size (Inch)	11 x 10		11 x 10	
	Type	Centrifugal		Centrifugal	
	Motor HP	1		1	
	RPM	1050		1050	
EVAP FAN DATA BELT DRIVE	Airflow Option	B	C	B	C
	Quantity	1	1	1	1
	Fan Size (Inch)	11 x 10	11 x 10	11 x 10	11 x 10
	Type	Centrifugal		Centrifugal	
	Motor Sheave	1VL34	1VL44	1VL34	1VL44
	Blower Sheave	AK46	AK46	AK46	AK46
	Belt	A37	A39	A37	A39
	Motor Hp, 1 Phase	1.5	-	1.5	-
	Motor Max Bhp, 3 Phase	2.4	2.9	2.4	2.9
	RPM	1750	1750	1750	1750
	Frame size	56HZ	56Z	56HZ	56Z
FILTERS	Quantity - Size	4 - (16 x 16 x 2)[1]		4 - (16 x 16 x 2)[1]	

1. 2 in. Throwaway, Standard, MERV 4 (Minimum Efficiency Reporting Value).

ZY07 Physical Data

Component		Models			
		ZYG07			ZYE07
Nominal Tonnage		6			6
AHRI COOLING PERFORMANCE	Gross Capacity @ AHRI A point (Btu)	81200			81200
	AHRI net capacity (Btu)	72000			72000
	EER	12			12.2
	SEER	-			-
	IEER	12.7			12.9
	IEER Intelli*Speed*	-			-
	Nominal CFM	2400			2400
	System power (KW)	5			5
	Refrigerant type	R-410A			R-410A
	Refrigerant charge (lb-oz)				
	System 1	8-8			8-8
	System 2	-			-
AHRI HEATING PERFORMANCE	Heating Option	D	E	F	-
	Heating model	Low	Med	High	-
	1st. Stage Heat input (K Btu)	57	90	110	-
	2nd. Stage Heat input (K Btu)	72	125	150	-
	1st. Stage Heat output (K Btu)	46	72	88	-
	2nd. Stage Heat output (K Btu)	58	100	120	-
	AFUE %				-
	Steady state efficiency (%)	80	80	80	-
	No. burners	2	3	3	-
	No. stages	2	2	2	-
	Temperature Rise Range (ºF)	18-30	31-51	37-62	-
	Gas Limit Setting (ºF)	140	140	160	-
	Gas piping connection (in.)	1/2	3/4	3/4	-
DIMENSIONS (inches)	Length	87.2			87.2
	Width	61.7			61.7
	Height	40.6			40.6
OPERATING WT. (lbs.)					734
COMPRESSORS	Type	Scroll			Scroll
	Quantity	1			1
	Unit Capacity Steps (%)	100			100
CONDENSER COIL DATA	Face area (Sq. Ft.)	21.1			21.1
	Rows	1			1
	Fins per inch	23			23
	Tube diameter (in./MM)	1/25			1/25
	Circuitry Type	2-pass Microchannel			2-pass Microchannel
EVAPORATOR COIL DATA	Face area (Sq. Ft.)	8.9			8.9
	Rows	3			3
	Fins per inch	15			15
	Tube diameter	0.375			0.375
	Circuitry Type	Intertwined			Intertwined
	Refrigerant control	TXV			TXV
CONDENSER FAN DATA	Quantity of fans	2			2
	Fan diameter (Inch)	22			22
	Type	Prop			Prop
	Drive type	Direct			Direct
	Quantity of motors	2			2
	Motor HP each	1/2			1/2
	No. speeds	1			1
	RPM	1085			1085
	Nominal total CFM	7600			7600

ZY07 Physical Data (Continued)

Component		Models					
		ZYG07			ZYE07		
Nominal Tonnage		6			6		
EVAP FAN DATA BELT DRIVE	Airflow Option	A	B	C	A	B	C
	Quantity	1	1	1	1	1	1
	Fan Size (Inch)	15 x 15	15 x 15	15 x 15	15 x 15	15 x 15	15 x 15
	Type	Centrifugal			Centrifugal		
	Motor Sheave	1VL34	1VL44	1VP50	1VL34	1VL44	1VP50
	Blower Sheave	AK74	AK74	AK74	AK74	AK74	AK74
	Belt	A47	A48	A48	A47	A48	A48
	Motor Max Bhp, 3 Phase	2.4	2.9	3.7	2.4	2.9	3.7
	RPM	1725	1725	1725	1725	1725	1725
	Frame size	56Y	56Y	56HZ	56Y	56Y	56HZ
FILTERS	Quantity - Size	4 - (16 x 20 x 2)[1]			4 - (16 x 20 x 2)[1]		

1. 2 in. Throwaway, Standard, MERV 4 (Minimum Efficiency Reporting Value).

ZYA7 Physical Data

Component		Models			
		ZYGA7			ZYEA7
Nominal Tonnage		6			6
AHRI COOLING PERFORMANCE	Gross Capacity @ AHRI A point (Btu)	73000			73000
	AHRI net capacity (Btu)	71000			71000
	EER	12			12
	SEER	-			-
	CV IEER	14.6			14.6
	IEER Intelli*Speed*	16			16
	Nominal CFM	2350			2350
	System power (KW)	5.87			5.89
	Refrigerant type	R-410A			R-410A
	Refrigerant charge (lb-oz)				
	System 1	7-11			7-11
	System 2	-			-
AHRI HEATING PERFORMANCE[1]	Heating Option	D	E	F	-
	Heating model	Low	Med	High	-
	1st. Stage Heat input (K Btu)	57	90	110	-
	2nd. Stage Heat input (K Btu)	72	125	150	-
	1st. Stage Heat output (K Btu)	46	72	88	-
	2nd. Stage Heat output (K Btu)	58	100	120	-
	AFUE %				-
	Steady state efficiency (%)	80	80	80	-
	No. burners	2	3	3	-
	No. stages	2	2	2	-
	Temperature Rise Range (ºF)	18-30	31-51	37-62	-
	Gas Limit Setting (ºF)	140	140	160	-
	Gas piping connection (in.)	1/2	3/4	3/4	-
DIMENSIONS (inches)	Length	87.2			87.2
	Width	61.7			61.7
	Height	40.6			40.6
OPERATING WT. (lbs.)		899			829
COMPRESSORS	Type	2-Stage Scroll			2-Stage Scroll
	Quantity	1			1
	Unit Capacity Steps (%)	67/100			67/100
CONDENSER COIL DATA	Face area (Sq. Ft.)	21.1			21.1
	Rows	1			1
	Fins per inch	23			23
	Tube diameter (in./MM)	1/25			1/25
	Circuitry Type	2-pass Microchannel			2-pass Microchannel
EVAPORATOR COIL DATA	Face area (Sq. Ft.)	8.9			8.9
	Rows	3			3
	Fins per inch	15			15
	Tube diameter	0.375			0.375
	Circuitry Type	Intertwined			Intertwined
	Refrigerant control	TXV			TXV
CONDENSER FAN DATA	Quantity of fans	2			2
	Fan diameter (Inch)	22			22
	Type	Prop			Prop
	Drive type	Direct			Direct
	Quantity of motors	2			2
	Motor HP each	1/2			1/2
	No. speeds	1			1
	RPM	1085			1085
	Nominal total CFM	7600			7600

ZYA7 Physical Data (Continued)

Component		Models					
		ZYGA7			ZYEA7		
Nominal Tonnage		6			6		
EVAP FAN DATA BELT DRIVE	Airflow Option	A	B	C	A	B	C
	Quantity	1	1	1	1	1	1
	Fan Size (Inch)	15 x 15	15 x 15	15 x 15	15 x 15	15 x 15	15 x 15
	Type	Centrifugal			Centrifugal		
	Motor Sheave	1VL34	1VL44	1VP50	1VL34	1VL44	1VP50
	Blower Sheave	AK74	AK74	AK74	AK74	AK74	AK74
	Belt	A47	A48	A48	A47	A48	A48
	Motor Max Bhp, 3 Phase	2.4	2.9	3.7	2.4	2.9	3.7
	RPM	1725	1725	1725	1725	1725	1725
	Frame size	56Y	56Y	56HZ	56Y	56Y	56HZ
FILTERS	Quantity - Size	4 - (16 x 20 x 2)[2]			4 - (16 x 20 x 2)[1]		

1. 1st Stage 60% of 2nd Stage.
2. 2 in. Throwaway, Standard, MERV 4 (Minimum Efficiency Reporting Value).

ZY08 Physical Data

Component		Model			
		ZYG08			ZYE08
Nominal Tonnage		7.5			7.5
AHRI COOLING PERFORMANCE	Gross Capacity @ AHRI A point (Btu)	97300			97300
	AHRI net capacity (Btu)	89000			89000
	EER	12			12.2
	SEER	-			-
	IEER	12.7			12.9
	IEER Intelli*Speed*	14.0			14.1
	Nominal CFM	2900			2900
	System power (KW)	6.6			6.6
	Refrigerant type	R-410A			R-410A
	Refrigerant charge (lb-oz)				
	System 1	6-0			6-0
	System 2	6-2			6-2
AHRI HEATING PERFORMANCE	Heating Options	D	E	F	-
	Heating model	Low	Med	High	-
	1st. Stage Heat input (K Btu)	90	125	176	-
	2nd. Stage Heat input (K Btu)	125	180	220	-
	1st. Stage Heat output (K Btu)	72	100	141	-
	2nd. Stage Heat output (K Btu)	100	144	176	-
	AFUE %				-
	Steady state efficiency (%)	80	80	80	-
	No. burners	3	4	5	-
	No. stages	2	2	2	-
	Temperature Rise Range (ºF)	25-41	36-59	43-72	-
	Gas Limit Setting (ºF)	140	150	140	-
	Gas piping connection (in.)	3/4	3/4	3/4	-
DIMENSIONS (inches)	Length	87.2			87.2
	Width	61.7			61.7
	Height	48.6			48.6
OPERATING WT. (lbs.)		980			878
COMPRESSORS	Type	Scroll			Scroll
	Quantity	2			2
	Unit Capacity Steps (%)	50/100			50/100
CONDENSER COIL DATA	Face area (Sq. Ft.)	25.5			25.5
	Rows	1			1
	Fins per inch	23			23
	Tube diameter (in./MM)	1/25			1/25
	Circuitry Type	2-pass Microchannel			2-pass Microchannel
EVAPORATOR COIL DATA	Face area (Sq. Ft.)	11.1			11.1
	Rows	4			4
	Fins per inch	15			15
	Tube diameter	0.375			0.375
	Circuitry Type	Intertwined			Intertwined
	Refrigerant control	TXV			TXV

ZY08 Physical Data (Continued)

Component		Model					
		ZYG08			ZYE08		
Nominal Tonnage		7.5			7.5		
CONDENSER FAN DATA	Quantity of fans	2			2		
	Fan diameter (Inch)	22			22		
	Type	Prop			Prop		
	Drive type	Direct			Direct		
	Quantity of motors	2			2		
	Motor HP each	1/2			1/2		
	No. speeds	1			1		
	RPM	1085			1085		
	Nominal total CFM	8600			8600		
EVAP FAN DATA BELT DRIVE	Airflow Option	A	B	C	A	B	C
	Quantity	1	1	1	1	1	1
	Fan Size (Inch)	15 x 15	15 x 15	15 x 15	15 x 15	15 x 15	15 x 15
	Type	Centrifugal			Centrifugal		
	Motor Sheave	1VL34	1VL44	1VP50	1VL34	1VL44	1VP50
	Blower Sheave	AK74	AK74	AK74	AK74	AK74	AK74
	Belt	A47	A48	A50	A47	A48	A50
	Motor Max Bhp, 3 Phase	2.4	2.4	3.7	2.4	2.4	3.7
	RPM	1725	1725	1725	1725	1725	1725
	Frame size	56Y	56Y	56HZ	56Y	56Y	56HZ
FILTERS	Quantity - Size	4 - (20 x 20 x 2)[1]			4 - (20 x 20 x 2)[1]		

1. 2 in. Throwaway, Standard, MERV 4 (Minimum Efficiency Reporting Value).

ZY09 Physical Data

Component		Model			
		ZYG09			ZYE09
Nominal Tonnage		8.5			8.5
AHRI COOLING PERFORMANCE	Gross Capacity @ AHRI A point (Btu)	109500			109500
	AHRI net capacity (Btu)	98000			98000
	EER	12			12.2
	SEER	-			-
	IEER	12.7			12.9
	IEER Intelli*Speed*	14.6			14.8
	Nominal CFM	3300			3300
	System power (KW)	7.30			7.30
	Refrigerant type	R-410A			R-410A
	Refrigerant charge (lb-oz)				
	System 1	6-8			6-8
	System 2	6-0			6-0
AHRI HEATING PERFORMANCE	Heating Options	D	E	F	-
	Heating model	Low	Med	High	-
	1st. Stage Heat input (K Btu)	90	125	176	-
	2nd. Stage Heat input (K Btu)	125	180	220	-
	1st. Stage Heat output (K Btu)	72	100	141	-
	2nd. Stage Heat output (K Btu)	100	144	176	-
	AFUE %				-
	Steady state efficiency (%)	80	80	80	-
	No. burners	3	4	5	-
	No. stages	2	2	2	-
	Temperature Rise Range (ºF)	22-36	31-52	38-64	-
	Gas Limit Setting (ºF)	140	150	140	-
	Gas piping connection (in.)	3/4	3/4	3/4	-
DIMENSIONS (inches)	Length	87.2			87.2
	Width	61.7			61.7
	Height	48.6			48.6
OPERATING WT. (lbs.)		980			878
COMPRESSORS	Type	Scroll			Scroll
	Quantity	2			2
	Unit Capacity Steps (%)	50/100			50/100
CONDENSER COIL DATA	Face area (Sq. Ft.)	25.5			25.5
	Rows	1			1
	Fins per inch	23			23
	Tube diameter (in./MM)	1/25			1/25
	Circuitry Type	2-pass Microchannel			2-pass Microchannel
EVAPORATOR COIL DATA	Face area (Sq. Ft.)	11.1			11.1
	Rows	4			4
	Fins per inch	15			15
	Tube diameter	0.375			0.375
	Circuitry Type	Intertwined			Intertwined
	Refrigerant control	TXV			TXV

ZY09 Physical Data (Continued)

Component		Model					
		ZYG09			ZYE09		
Nominal Tonnage		8.5			8.5		
CONDENSER FAN DATA	Quantity of fans	2			2		
	Fan diameter (Inch)	22			22		
	Type	Prop			Prop		
	Drive type	Direct			Direct		
	Quantity of motors	2			2		
	Motor HP each	1/2			1/2		
	No. speeds	1			1		
	RPM	1085			1085		
	Nominal total CFM	8600			8600		
EVAP FAN DATA BELT DRIVE	Airflow Option	A	B	C	A	B	C
	Quantity	1	1	1	1	1	1
	Fan Size (Inch)	15 x 15	15 x 15	15 x 15	15 x 15	15 x 15	15 x 15
	Type	Centrifugal			Centrifugal		
	Motor Sheave	1VL34	1VL44	1VP50	1VL34	1VL44	1VP50
	Blower Sheave	AK74	AK74	AK74	AK74	AK74	AK74
	Belt	A47	A48	A50	A47	A48	A50
	Motor Max Bhp, 3 Phase	2.4	2.4	3.7	2.4	2.4	3.7
	RPM	1725	1725	1725	1725	1725	1725
	Frame size	56Y	56Y	56HZ	56Y	56Y	56HZ
FILTERS	Quantity - Size	4 - (20 x 20 x 2)[1]			4 - (20 x 20 x 2)[1]		

1. 2 in. Throwaway, Standard, MERV 4 (Minimum Efficiency Reporting Value).

ZY12 Physical Data

Component		Model			
		ZYG12			ZYE12
Nominal Tonnage		10			10
AHRI COOLING PERFORMANCE	Gross Capacity @ AHRI A point (Btu)	123700			123700
	AHRI net capacity (Btu)	116000			116000
	EER	11.5			11.7
	SEER	-			-
	IEER	12.7			12.9
	IEER Intelli*Speed*	14.0			14.0
	Nominal CFM	3200			3200
	System power (KW)	8.90			8.90
	Refrigerant type	R-410A			R-410A
	Refrigerant charge (lb-oz)				
	System 1	6-8			6-8
	System 2	7-0			7-0
AHRI HEATING PERFORMANCE	Heating Options	D	E	F	-
	Heating model	Low	Med	High	-
	1st. Stage Heat input (K Btu)	125	176	200	-
	2nd. Stage Heat input (K Btu)	180	220	250	-
	1st. Stage Heat output (K Btu)	100	141	160	-
	2nd. Stage Heat output (K Btu)	144	176	200	-
	AFUE %				-
	Steady state efficiency (%)	80	80	80	-
	No. burners	4	5	5	-
	No. stages	2	2	2	-
	Temperature Rise Range (ºF)	27-44	33-54	37-62	-
	Gas Limit Setting (ºF)	150	140	160	-
	Gas piping connection (in.)	3/4	3/4	3/4	-
DIMENSIONS (inches)	Length	87.2			87.2
	Width	61.7			61.7
	Height	55.3			55.3
OPERATING WT. (lbs.)		1008			902
COMPRESSORS	Type	Scroll			Scroll
	Quantity	2			2
	Unit Capacity Steps (%)	50/100			50/100
CONDENSER COIL DATA	Face area (Sq. Ft.)	24.9			24.9
	Rows	1			1
	Fins per inch	21			21
	Tube diameter (in./MM)	1.26/32			1.26/32
	Circuitry Type	2-pass Microchannel			2-pass Microchannel
EVAPORATOR COIL DATA	Face area (Sq. Ft.)	11.1			11.1
	Rows	4			4
	Fins per inch	15			15
	Tube diameter	0.375			0.375
	Circuitry Type	Intertwined			Intertwined
	Refrigerant control	TXV			TXV

ZY12 Physical Data (Continued)

Component		Model					
		ZYG12			ZYE12		
Nominal Tonnage		10			10		
CONDENSER FAN DATA	Quantity of fans	1			1		
	Fan diameter (Inch)	30			30		
	Type	Prop			Prop		
	Drive type	Direct			Direct		
	Quantity of motors	1			1		
	Motor HP each	1 1/2			1 1/2		
	No. speeds	1			1		
	RPM	1140			1140		
	Nominal total CFM	9700			9700		
EVAP FAN DATA BELT DRIVE	Airflow Option	A	B	C	A	B	C
	Quantity	1	1	1	1	1	1
	Fan Size (Inch)	15 x 15	15 x 15	15 x 15	15 x 15	15 x 15	15 x 15
	Type	Centrifugal			Centrifugal		
	Motor Sheave	1VL44	1VP50	1VP56	1VL44	1VP50	1VP56
	Blower Sheave	AK79	AK79	BK85	AK79	AK79	BK85
	Belt	A50	A50	BX52	A50	A50	BX52
	Motor Max Bhp, 3 Phase	2.4	3.7	5.25	2.4	3.7	5.25
	RPM	1725	1725	1725	1725	1725	1725
	Frame size	56Y	56HZ	145TY	56Y	56HZ	145TY
FILTERS	Quantity - Size	4 - (20 x 20 x 2)[1]			4 - (20 x 20 x 2)[1]		

1. 2 in. Throwaway, Standard, MERV 4 (Minimum Efficiency Reporting Value).

ZQ04 Physical Data

Component		Models	Models
		ZQG04	ZQE04
Nominal Tonnage		3	3
AHRI COOLING PERFORMANCE	Gross Capacity @ AHRI A point (Btu)	38,100	38,100
	AHRI net capacity (Btu)	35,000	35,000
	EER	12.2	12.2
	SEER	14	14
	IEER	-	-
	Nominal CFM	1200	1200
	System power (KW)	2.8	2.8
	Refrigerant type	R-410A	R-410A
	Refrigerant charge (lb-oz)		
	System 1	3-6	3-6
	System 2	-	-

AHRI HEATING PERFORMANCE SINGLE PHASE	Heating Option	L	D	M	E	
	Heating Model	Low (Low-NOx)	Low	Med (Low-NOx)	Med	
	1st. Stage Heat input (K Btu)	-	-	-	-	
	2nd. Stage Heat input (K Btu)	56	70	90	112	
	1st. Stage Heat output (K Btu)	-	-	-	-	
	2nd. Stage Heat output (K Btu)	45	56	72	90	
	AFUE %	-	-	-	81	
	FER Compliant	-	-	-	Yes	
	No. burners	2	2	3	3	
	No. stages	1	1	1	1	
	Temperature Rise Range (ºF)	10-40	20-50	35-65	50-80	
	Gas Limit Setting (ºF)	150	150	140	140	
	Gas piping connection (in.)	1/2	1/2	1/2	1/2	

AHRI HEATING PERFORMANCE THREE PHASE	Heating Option	L	D	M	E	
	Heating Model	Low (Low-NOx)	Low	Med (Low-NOx)	Med	
	1st. Stage Heat input (K Btu)	-	-	-	82	
	2nd. Stage Heat input (K Btu)	56	70	90	112	
	1st. Stage Heat output (K Btu)	-	-	-	66	
	2nd. Stage Heat output (K Btu)	45	56	72	90	
	Steady state efficiency (%)	80	80	80	80	
	No. burners	2	2	3	3	
	No. stages	1	1	1	2	
	Temperature Rise Range (ºF)	28-46	35-58	44-74	55-78	
	Gas Limit Setting (ºF)	150	150	140	140	
	Gas piping connection (in.)	1/2	1/2	1/2	1/2	

DIMENSIONS (inches)	Length	74.1	74.1
	Width	48.9	48.9
	Height	32.5	32.5
OPERATING WT. (lbs.)		498	450
COMPRESSORS	Type	Scroll	Scroll
	Quantity	1	1
	Unit Capacity Steps (%)	100	100

ZQ04 Physical Data

Component		Models		Models	
		ZQG04		ZQE04	
Nominal Tonnage		3		3	
CONDENSER COIL DATA	Face area (Sq. Ft.)	16.3		16.3	
	Rows	1		1	
	Fins per inch	23		23	
	Tube diameter (in./MM)	.63/16		.63/16	
	Circuitry Type	2-pass Microchannel		2-pass Microchannel	
EVAPORATOR COIL DATA	Face area (Sq. Ft.)	5.5		5.5	
	Rows	2		2	
	Fins per inch	15		15	
	Tube diameter	0.375		0.375	
	Circuitry Type	Intertwined		Intertwined	
	Refrigerant control	Orifice		Orifice	
CONDENSER FAN DATA	Quantity of fans	1		1	
	Fan diameter (Inch)	22		22	
	Type	Prop		Prop	
	Drive type	Direct		Direct	
	Quantity of motors	1		1	
	Motor HP each	1/4		1/4	
	No. speeds	1		1	
	RPM	1100		1100	
	Nominal total CFM	3800		3800	
EVAP FAN DATA - DIRECT DRIVE	Airflow Option	A		A	
	Quantity	1		1	
	Fan Size (Inch)	10 x 10		10 x 10	
	Type	Centrifugal		Centrifugal	
	Motor HP	3/4		3/4	
	Motor RPM	1050		1050	
EVAP FAN DATA - BELT DRIVE	Airflow Option	B	C	B	C
	Quantity	1	1	1	1
	Fan Size (Inch)	10 x 10	10 x 10	10 x 10	10 x 10
	Type	Centrifugal	Centrifugal	Centrifugal	Centrifugal
	Motor Sheave	1VL34	1VL44	1VL34	1VL44
	Blower Sheave	AK46	AK46	AK46	AK46
	Belt	A39	A40	A39	A40
	Motor HP, 1-phase	1.5	--	1.5	--
	Frame size, 1-phase	56HZ	--	56HZ	--
	Motor HP, 3-phase	2.4	2.4	2.4	2.4
	Frame size, 3-phase	56Y	56Y	56Y	56Y
	Motor RPM	1725	1725	1725	1725
FILTERS	Quantity - Size	2 - (16 x 25 x 2)[1]		2 - (16 x 25 x 2)[1]	

1. 2 In. Throwaway, Standard, MERV 4 (Minimum Efficiency Reporting Value)

ZQ05 Physical Data

Component		Models	Models
		ZQG05	ZQE05
Nominal Tonnage		4	4
AHRI COOLING PERFORMANCE	Gross Capacity @ AHRI A point (Btu)	51,300	51,300
	AHRI net capacity (Btu)	48,000	48,000
	EER	12	12
	SEER	14	14
	IEER	-	-
	Nominal CFM	1575	1575
	System power (KW)	4	4
	Refrigerant type	R-410A	R-410A
	Refrigerant charge (lb-oz)		
	System 1	4-6	4-6
	System 2	-	-

AHRI HEATING PERFORMANC SINGLE PHASE	Heating Option	L	D	M	E	N	F	
	Heating Model	Low (Low-NOx)	Low	Med (Low-NOx)	Med	High, (Low-NOx)	High	
	1st. Stage Heat input (K Btu)	-	-	-	-	-	-	
	2nd. Stage Heat input (K Btu)	56	70	90	112	116	142	
	1st. Stage Heat output (K Btu)	-	-	-	-	-	-	
	2nd. Stage Heat output (K Btu)	45	56	72	90	93	114	
	AFUE %	-	-	-	81	-	-	
	FER Compliant	-	-	-	Yes	-	-	
	No. burners	2	2	3	3	3	3	
	No. stages	1	1	1	1	1	1	
	Temperature Rise Range (ºF)	05-35	15-45	25-55	40-70	35-65	45-75	
	Gas Limit Setting (ºF)	150	150	140	140	150	145	
	Gas piping connection (in.)	1/2	1/2	1/2	1/2	1/2	1/2	

AHRI HEATING PERFORMANCE THREE PHASE	Heating Option	L	D	M	E	N	F	
	Heating Model	Low (Low-NOx)	Low	Med (Low-NOx)	Med	High, (Low-NOx)	High	
	1st. Stage Heat input (K Btu)	-	-	-	-	-	100	
	2nd. Stage Heat input (K Btu)	56	70	90	112	118	145	
	1st. Stage Heat output (K Btu)	-	-	-	-	-	80	
	2nd. Stage Heat output (K Btu)	45	56	72	90	94	116	
	Steady state efficiency (%)	80	80	80	80	80	80	
	No. burners	2	2	3	3	3	3	
	No. stages	1	1	1	1	1	2	
	Temperature Rise Range (ºF)	21-35	26-43	33-56	41-69	44-73	49-77	
	Gas Limit Setting (ºF)	150	150	140	140	150	145	
	Gas piping connection (in.)	1/2	1/2	1/2	1/2	1/2	1/2	

DIMENSIONS (inches)	Length	74.1	74.1
	Width	48.9	48.9
	Height	32.5	32.5
OPERATING WT. (lbs.)		538	487
COMPRESSORS	Type	Scroll	Scroll
	Quantity	1	1
	Unit Capacity Steps (%)	100	100

ZQ05 Physical Data

Component		Models		Models	
		ZQG05		ZQE05	
Nominal Tonnage		4		4	
CONDENSER COIL DATA	Face area (Sq. Ft.)	16.3		16.3	
	Rows	1		1	
	Fins per inch	23		23	
	Tube diameter (in./MM)	.63/16		.63/16	
	Circuitry Type	2-pass Microchannel		2-pass Microchannel	
EVAPORATOR COIL DATA	Face area (Sq. Ft.)	5.5		5.5	
	Rows	3		3	
	Fins per inch	15		15	
	Tube diameter	0.375		0.375	
	Circuitry Type	Intertwined		Intertwined	
	Refrigerant control	Orifice		Orifice	
CONDENSER FAN DATA	Quantity of fans	1		1	
	Fan diameter (Inch)	22		22	
	Type	Prop		Prop	
	Drive type	Direct		Direct	
	Quantity of motors	1		1	
	Motor HP each	1/4		1/4	
	No. speeds	1		1	
	RPM	1100		1100	
	Nominal total CFM	3800		3800	
EVAP FAN DATA - DIRECT DRIVE	Airflow Option	A		A	
	Quantity	1		1	
	Fan Size (Inch)	10 x 10		10 x 10	
	Type	Centrifugal		Centrifugal	
	Motor HP	1		1	
	Motor RPM	1050		1050	
EVAP FAN DATA - BELT DRIVE	Airflow Option	B	C	B	C
	Quantity	1	1	1	1
	Fan Size (Inch)	10 x 10	10 x 10	10 x 10	10 x 10
	Type	Centrifugal	Centrifugal	Centrifugal	Centrifugal
	Motor Sheave	1VL34	1VL44	1VL34	1VL44
	Blower Sheave	AK46	AK46	AK46	AK46
	Belt	A39	A40	A39	A40
	Motor HP, 1-phase	1.5	--	1.5	--
	Frame size, 1-phase	56HZ	--	56HZ	--
	Motor HP, 3-phase	2.4	2.4	2.4	2.4
	Frame size, 3-phase	56Y	56Y	56Y	56Y
	Motor RPM	1725	1725	1725	1725
FILTERS	Quantity - Size	2 - (16 x 25 x 2)[1]		2 - (16 x 25 x 2)[1]	

1. 2 In. Throwaway, Standard, MERV 4 (Minimum Efficiency Reporting Value)

ZQ06 Physical Data

Component		Models	Models
		ZQG06	ZQE06
Nominal Tonnage		5	5
AHRI COOLING PERFORMANCE	Gross Capacity @ AHRI A point (Btu)	64,200	64,200
	AHRI net capacity (Btu)	58,500	58,500
	EER	12.1	12.1
	SEER	14.1	14.1
	IEER	-	-
	Nominal CFM	1950	1950
	System power (KW)	4.8	4.8
	Refrigerant type	R-410A	R-410A
	Refrigerant charge (lb-oz)		
	System 1	5-14	5-14
	System 2	-	-

AHRI HEATING PERFORMANCE SINGLE PHASE	Heating Option	L	D	M	E	N	F	
	Heating Model	Low (Low-NOx)	Low	Med (Low-NOx)	Med	High, (Low-NOx)	High	
	1st. Stage Heat input (K Btu)	-	-	-	-	-	-	
	2nd. Stage Heat input (K Btu)	56	70	90	112	116	142	
	1st. Stage Heat output (K Btu)	-	-	-	-	-	-	
	2nd. Stage Heat output (K Btu)	45	56	72	90	93	114	
	AFUE %	-	-	-	81	-	-	
	FER Compliant	-	-	-	Yes	-	-	
	No. burners	2	2	3	3	3	3	
	No. stages	1	1	1	1	1	1	
	Temperature Rise Range (ºF)	05-35	10-40	15-45	30-60	30-60	40-70	
	Gas Limit Setting (ºF)	150	150	140	140	145	140	
	Gas piping connection (in.)	1/2	1/2	1/2	1/2	1/2	1/2	

AHRI HEATING PERFORMANCE THREE PHASE	Heating Option	L	D	M	E	N	F	
	Heating Model	Low (Low-NOx)	Low	Med (Low-NOx)	Med	High, (Low-NOx)	High	
	1st. Stage Heat input (K Btu)	-	-	-	-	-	100	
	2nd. Stage Heat input (K Btu)	56	70	90	112	118	145	
	1st. Stage Heat output (K Btu)	-	-	-	-	-	80	
	2nd. Stage Heat output (K Btu)	45	56	72	90	94	116	
	Steady state efficiency (%)	80	80	80	80	80	80	
	No. burners	2	2	3	3	3	3	
	No. stages	1	1	1	1	1	2	
	Temperature Rise Range (ºF)	17-28	21-35	27-44	33-55	35-58	43-72	
	Gas Limit Setting (ºF)	150	150	140	140	145	140	
	Gas piping connection (in.)	1/2	1/2	1/2	1/2	1/2	1/2	

DIMENSIONS (inches)	Length	74.1	74.1
	Width	48.9	48.9
	Height	40.6	40.6
OPERATING WT. (lbs.)		615	566
COMPRESSORS	Type	Scroll	Scroll
	Quantity	1	1
	Unit Capacity Steps (%)	100	100

ZQ06 Physical Data

Component		Models		Models	
		ZQG06		ZQE06	
Nominal Tonnage		5		5	
CONDENSER COIL DATA	Face area (Sq. Ft.)	21.1		21.1	
	Rows	1		1	
	Fins per inch	23		23	
	Tube diameter (in./MM)	.79/20		.79/20	
	Circuitry Type	2-pass Microchannel		2-pass Microchannel	
EVAPORATOR COIL DATA	Face area (Sq. Ft.)	7.3		7.3	
	Rows	3		3	
	Fins per inch	15		15	
	Tube diameter	0.375		0.375	
	Circuitry Type	Intertwined		Intertwined	
	Refrigerant control	Orifice		Orifice	
CONDENSER FAN DATA	Quantity of fans	1		1	
	Fan diameter (Inch)	22		22	
	Type	Prop		Prop	
	Drive type	Direct		Direct	
	Quantity of motors	1		1	
	Motor HP each	1/2		1/2	
	No. speeds	1		1	
	RPM	1085		1085	
	Nominal total CFM	4600		4600	
EVAP FAN DATA - DIRECT DRIVE	Airflow Option	A		A	
	Quantity	1		1	
	Fan Size (Inch)	11 x 10		11 x 10	
	Type	Centrifugal		Centrifugal	
	Motor HP	1		1	
	Motor RPM	1050		1050	
EVAP FAN DATA - BELT DRIVE	Airflow Option	B	C	B	C
	Quantity	1	1	1	1
	Fan Size (Inch)	11 x 10	11 x 10	11 x 10	11 x 10
	Type	Centrifugal	Centrifugal	Centrifugal	Centrifugal
	Motor Sheave	1VL34	1VL44	1VL34	1VL44
	Blower Sheave	AK46	AK46	AK46	AK46
	Belt	A37	A39	A37	A39
	Motor HP, 1-phase	1.5	--	1.5	--
	Frame size, 1-phase	56HZ	--	56HZ	--
	Motor HP, 3-phase	2.4	2.9	2.4	2.9
	Frame size, 3-phase	56Y	56HZ	56Y	56HZ
	Motor RPM	1725	1725	1725	1725
FILTERS	Quantity - Size	4 - (16 x 16 x 2)[1]		4 - (16 x 16 x 2)[1]	

1. 2 In. Throwaway, Standard, MERV 4 (Minimum Efficiency Reporting Value)

ZL08 Physical Data

Component		Models			
		ZLG08			ZLE08
Nominal Tonnage		7.5			7.5
AHRI COOLING PERFORMANCE	Gross Capacity @ AHRI A point (Btu)	93000			93000
	AHRI net capacity (Btu)	89000			89000
	EER	12			12.2
	SEER	-			-
	IEER IntelliSpeed	15.6			15.8
	VAV IEER	15.2			15.4
	Nominal CFM	2900			2900
	System power (KW)	7.40			7.40
	Refrigerant type	R-410A			R-410A
	Refrigerant charge (lb-oz)				
	System 1	6-0			6-0
	System 2	6-6			6-6
AHRI HEATING PERFORMANCE THREE PHASE	Heating Option	D	E	F	-
	Heating Model	Low	Med	High	-
	1st. Stage Heat input (K Btu)	90	125	176	-
	2nd. Stage Heat input (K Btu)	125	180	220	-
	1st. Stage Heat output (K Btu)	72	100	141	-
	2nd. Stage Heat output (K Btu)	100	144	176	-
	Steady state efficiency (%)	80	80	80	-
	No. burners	3	4	5	-
	No. stages	2	2	2	-
	Temperature Rise Range (ºF)	25-41	36-59	43-72	-
	Gas Limit Setting (ºF)	140	150	140	-
	Gas piping connection (in.)	3/4	3/4	3/4	-
DIMENSIONS (inches)	Length	87.2			87.2
	Width	61.7			61.7
	Height	48.6			48.6
OPERATING WT. (lbs.)		1040			920
COMPRESSORS	Type	2-Stage Scroll/Scroll			2-Stage Scroll/Scroll
	Quantity	2			2
	Unit Capacity Steps (%)	34 / 67 /1 00			34 / 67 /1 00
CONDENSER COIL DATA	Face area (Sq. Ft.)	25.5			25.5
	Rows	1			1
	Fins per inch	23			23
	Tube diameter (in./MM)	1/25			1/25
	Circuitry Type	2-pass Microchannel			2-pass Microchannel
EVAPORATOR COIL DATA	Face area (Sq. Ft.)	11.1			11.1
	Rows	4			4
	Fins per inch	15			15
	Tube diameter	0.375			0.375
	Circuitry Type	Intertwined			Intertwined
	Refrigerant control	TXV			TXV
CONDENSER FAN DATA	Quantity of fans	2			2
	Fan diameter (Inch)	22			22
	Type	Prop			Prop
	Drive type	Direct			Direct
	Quantity of motors	2			2
	Motor HP each	1/2			1/2
	No. speeds	1			1
	RPM	1085			1085
	Nominal total CFM	8600			8600

ZL08 Physical Data

Component		Models					
		ZLG08			ZLE08		
Nominal Tonnage		7.5			7.5		
EVAP FAN DATA - BELT DRIVE	Airflow Option	A	B	C	A	B	C
	Quantity	1	1	1	1	1	1
	Fan Size (Inch)	15 x 15	15 x 15	15 x 15	15 x 15	15 x 15	15 x 15
	Type	Centrifugal			Centrifugal		
	Motor Sheave	1VL34	1VL44	1VP50	1VL34	1VL44	1VP50
	Blower Sheave	AK74	AK74	AK74	AK74	AK74	AK74
	Belt	A47	A48	A50	A47	A48	A50
	Motor Max Bhp, 3 Phase	2.4	2.4	3.7	2.4	2.4	3.7
	RPM	1725	1725	1725	1725	1725	1725
	Frame size	56Y	56Y	56HZ	56Y	56Y	56HZ
FILTERS	Quantity - Size	4 - (20 x 20 x 2)[1]			4 - (20 x 20 x 2)[1]		

1. 2 In. Throwaway, Standard, MERV 4 (Minimum Efficiency Reporting Value)

ZL09 Physical Data

Component		Models			
		ZLG09			ZLE09
Nominal Tonnage		8.5			8.5
AHRI COOLING PERFORMANCE	Gross Capacity @ AHRI A point (Btu)	101000			101000
	AHRI net capacity (Btu)	98000			98000
	EER	12			12.2
	SEER	-			-
	IEER IntelliSpeed	16.1			16.3
	VAV IEER	15.7			15.9
	Nominal CFM	3000			3000
	System power (KW)	8.00			8.00
	Refrigerant type	R-410A			R-410A
	Refrigerant charge (lb-oz)				
	System 1	6-4			6-4
	System 2	6-4			6-4
AHRI HEATING PERFORMANCE THREE PHASE	Heating Option	D	E	F	-
	Heating Model	Low	Med	High	-
	1st. Stage Heat input (K Btu)	90	125	176	-
	2nd. Stage Heat input (K Btu)	125	180	220	-
	1st. Stage Heat output (K Btu)	72	100	141	-
	2nd. Stage Heat output (K Btu)	100	144	176	-
	Steady state efficiency (%)	80	80	80	-
	No. burners	3	4	5	-
	No. stages	2	2	2	-
	Temperature Rise Range (ºF)	22-36	31-52	38-64	-
	Gas Limit Setting (ºF)	140	150	140	-
	Gas piping connection (in.)	3/4	3/4	3/4	-
DIMENSIONS (inches)	Length	87.2			87.2
	Width	61.7			61.7
	Height	48.6			48.6
OPERATING WT. (lbs.)		1030			925
COMPRESSORS	Type	2-Stage Scroll/Scroll			2-Stage Scroll/Scroll
	Quantity	2			2
	Unit Capacity Steps (%)	34 / 67 /1 00			34 / 67 /1 00
CONDENSER COIL DATA	Face area (Sq. Ft.)	25.5			25.5
	Rows	1			1
	Fins per inch	23			23
	Tube diameter (in./MM)	1/25			1/25
	Circuitry Type	2-pass Microchannel			2-pass Microchannel
EVAPORATOR COIL DATA	Face area (Sq. Ft.)	11.1			11.1
	Rows	4			4
	Fins per inch	15			15
	Tube diameter	0.375			0.375
	Circuitry Type	Intertwined			Intertwined
	Refrigerant control	TXV			TXV
CONDENSER FAN DATA	Quantity of fans	2			2
	Fan diameter (Inch)	22			22
	Type	Prop			Prop
	Drive type	Direct			Direct
	Quantity of motors	2			2
	Motor HP each	1/2			1/2
	No. speeds	1			1
	RPM	1085			1085
	Nominal total CFM	8600			8600

ZL09 Physical Data

Component		Models					
		ZLG09			ZLE09		
Nominal Tonnage		8.5			8.5		
EVAP FAN DATA - BELT DRIVE	Airflow Option	A	B	C	A	B	C
	Quantity	1	1	1	1	1	1
	Fan Size (Inch)	15 x 15	15 x 15	15 x 15	15 x 15	15 x 15	15 x 15
	Type	Centrifugal			Centrifugal		
	Motor Sheave	1VL34	1VL44	1VP50	1VL34	1VL44	1VP50
	Blower Sheave	AK74	AK74	AK74	AK74	AK74	AK74
	Belt	A47	A48	A50	A47	A48	A50
	Motor Max Bhp, 3 Phase	2.4	2.4	3.7	2.4	2.4	3.7
	RPM	1725	1725	1725	1725	1725	1725
	Frame size	56Y	56Y	56HZ	56Y	56Y	56HZ
FILTERS	Quantity - Size	4 - (20 x 20 x 2)[1]			4 - (20 x 20 x 2)[1]		

1. 2 In. Throwaway, Standard, MERV 4 (Minimum Efficiency Reporting Value)

ZL12 Physical Data

Component		Models			
		ZLG12			ZLE12
Nominal Tonnage		10			10
AHRI COOLING PERFORMANCE	Gross Capacity @ AHRI A point (Btu)	120200			120200
	AHRI net capacity (Btu)	116000			116000
	EER	12			12.2
	SEER	-			-
	IEER IntelliSpeed	15.4			15.6
	VAV IEER	15.2			15.4
	Nominal CFM	3100			3100
	System power (KW)	9.60			9.60
	Refrigerant type	R-410A			R-410A
	Refrigerant charge (lb-oz)				
	System 1	6-0			6-0
	System 2	6-10			6-10
AHRI HEATING PERFORMANCE THREE PHASE	Heating Option	D	E	F	-
	Heating Model	Low	Med	High	-
	1st. Stage Heat input (K Btu)	125	176	200	-
	2nd. Stage Heat input (K Btu)	180	220	250	-
	1st. Stage Heat output (K Btu)	100	141	160	-
	2nd. Stage Heat output (K Btu)	144	176	200	-
	Steady state efficiency (%)	80	80	80	-
	No. burners	4	5	5	-
	No. stages	2	2	2	-
	Temperature Rise Range (ºF)	27-44	33-54	37-62	-
	Gas Limit Setting (ºF)	150	140	160	-
	Gas piping connection (in.)	3/4	3/4	3/4	-
DIMENSIONS (inches)	Length	87.2			87.2
	Width	61.7			61.7
	Height	55.3			55.3
OPERATING WT. (lbs.)		1050			955
COMPRESSORS	Type	2-Stage Scroll/Scroll			2-Stage Scroll/Scroll
	Quantity	2			2
	Unit Capacity Steps (%)	34 / 67 /1 00			34 / 67 /1 00
CONDENSER COIL DATA	Face area (Sq. Ft.)	24.9			24.9
	Rows	1			1
	Fins per inch	21			21
	Tube diameter (in./MM)	1.26/32			1.26/32
	Circuitry Type	2-pass Microchannel			2-pass Microchannel
EVAPORATOR COIL DATA	Face area (Sq. Ft.)	11.1			11.1
	Rows	4			4
	Fins per inch	15			15
	Tube diameter	0.375			0.375
	Circuitry Type	Intertwined			Intertwined
	Refrigerant control	TXV			TXV
CONDENSER FAN DATA	Quantity of fans	1			1
	Fan diameter (Inch)	30			30
	Type	Prop			Prop
	Drive type	Direct			Direct
	Quantity of motors	1			1
	Motor HP each	1 1/2			1 1/2
	No. speeds	1			1
	RPM	1140			1140
	Nominal total CFM	9700			9700

ZL12 Physical Data

Component		Models					
		ZLG12			ZLE12		
Nominal Tonnage		10			10		
EVAP FAN DATA - BELT DRIVE	Airflow Option	A	B	C	A	B	C
	Quantity	1	1	1	1	1	1
	Fan Size (Inch)	15 x 15	15 x 15	15 x 15	15 x 15	15 x 15	15 x 15
	Type	Centrifugal			Centrifugal		
	Motor Sheave	1VL44	1VP50	1VP56	1VL44	1VP50	1VP56
	Blower Sheave	AK79	AK79	BK85	AK79	AK79	BK85
	Belt	A50	A50	BX52	A50	A50	BX52
	Motor Max Bhp, 3 Phase	2.4	3.7	5.25	2.4	3.7	5.25
	RPM	1725	1725	1725	1725	1725	1725
	Frame size	56Y	56HZ	145TY	56Y	56HZ	145TY
FILTERS	Quantity - Size	4 - (20 x 20 x 2)[1]			4 - (20 x 20 x 2)[1]		

1. 2 In. Throwaway, Standard, MERV 4 (Minimum Efficiency Reporting Value)

ZL14 Physical Data

Component		Models			
		ZLG14			ZLE14
Nominal Tonnage		12.5			12.5
AHRI COOLING PERFORMANCE	Gross Capacity @ AHRI A point (Btu)	139500			139500
	AHRI net capacity (Btu)	135000			135000
	EER	11.0			11.2
	SEER	-			-
	IEER IntelliSpeed	14.7			14.9
	VAV IEER	14.5			14.7
	Nominal CFM	3900			3900
	System power (KW)	11.90			11.90
	Refrigerant type	R-410A			R-410A
	Refrigerant charge (lb-oz)				
	System 1	6-2			6-2
	System 2	6-8			6-8
AHRI HEATING PERFORMANCE THREE PHASE	Heating Option	D	E	F	-
	Heating Model	Low	Med	High	-
	1st. Stage Heat input (K Btu)	125	176	200	-
	2nd. Stage Heat input (K Btu)	180	220	250	-
	1st. Stage Heat output (K Btu)	100	141	160	-
	2nd. Stage Heat output (K Btu)	144	176	200	-
	Steady state efficiency (%)	80	80	80	-
	No. burners	4	5	5	-
	No. stages	2	2	2	-
	Temperature Rise Range (ºF)	21-36	26-43	30-49	-
	Gas Limit Setting (ºF)	150	140	160	-
	Gas piping connection (in.)	3/4	3/4	3/4	-
DIMENSIONS (inches)	Length	87.2			87.2
	Width	61.7			61.7
	Height	55.3			55.3
OPERATING WT. (lbs.)		1070			980
COMPRESSORS	Type	2-Stage Scroll/Scroll			2-Stage Scroll/Scroll
	Quantity	2			2
	Unit Capacity Steps (%)	34 / 67 /1 00			34 / 67 /1 00
CONDENSER COIL DATA	Face area (Sq. Ft.)	24.9			24.9
	Rows	1			1
	Fins per inch	21			21
	Tube diameter (in./MM)	1.26/32			1.26/32
	Circuitry Type	2-pass Microchannel			2-pass Microchannel
EVAPORATOR COIL DATA	Face area (Sq. Ft.)	11.1			11.1
	Rows	4			4
	Fins per inch	15			15
	Tube diameter	0.375			0.375
	Circuitry Type	Intertwined			Intertwined
	Refrigerant control	TXV			TXV
CONDENSER FAN DATA	Quantity of fans	1			1
	Fan diameter (Inch)	30			30
	Type	Prop			Prop
	Drive type	Direct			Direct
	Quantity of motors	1			1
	Motor HP each	1 1/2			1 1/2
	No. speeds	1			1
	RPM	1140			1140
	Nominal total CFM	9700			9700

ZL14 Physical Data

Component		Models					
		ZLG14			ZLE14		
Nominal Tonnage		12.5			12.5		
EVAP FAN DATA - BELT DRIVE	Airflow Option	A	B	C	A	B	C
	Quantity	1	1	1	1	1	1
	Fan Size (Inch)	15 x 15	15 x 15	15 x 15	15 x 15	15 x 15	15 x 15
	Type	Centrifugal			Centrifugal		
	Motor Sheave	1VL44	1VP50	1VP56	1VL44	1VP50	1VP56
	Blower Sheave	AK79	AK79	BK85	AK79	AK79	BK85
	Belt	A50	A50	BX54	A50	A50	BX54
	Motor Max Bhp, 3 Phase	2.9	3.7	5.25	2.9	3.7	5.25
	RPM	1750	1750	1750	1750	1750	1750
	Frame size	56Y	182TZ	184TZ	56Y	182TZ	184TZ
FILTERS	Quantity - Size	4 - (20 x 20 x 2)[1]			4 - (20 x 20 x 2)[1]		

1. 2 In. Throwaway, Standard, MERV 4 (Minimum Efficiency Reporting Value)

ZX/ZQ/ZQ/ZL 04-14, A7 Unit Limitations

Model	Size (Tons)	Unit Voltage	SCCR (kVA)	Unit Limitations		
				Applied Voltage		Outdoor DB Temp
				Min	Max	Max (°F)
ZY/ZQ	04 (3)	208/230-1-60	5	187	252	125
		208/230-3-60	5	187	252	125
		460-3-60	5	432	504	125
		575-3-60	5	540	630	125
ZY/ZQ	05 (4)	208/230-1-60	5	187	252	125
		208/230-3-60	5	187	252	125
		460-3-60	5	432	504	125
		575-3-60	5	540	630	125
ZY/ZQ	06 (5)	208/230-1-60	5	187	252	125
		208/230-3-60	5	187	252	125
		460-3-60	5	432	504	125
		575-3-60	5	540	630	125
ZY	07 (6)	208/230-3-60	5	187	252	125
		460-3-60	5	432	504	125
		575-3-60	5	540	630	125
ZX/ZY	A7 (6)	208/230-3-60	5	187	252	125
		460-3-60	5	432	504	125
		575-3-60	5	540	630	125
ZX/ZY/ZL	08 (7.5)	208/230-3-60	5	187	252	125
		460-3-60	5	432	504	125
		575-3-60	5	540	630	125
ZX/ZY/ZL	09 (8.5)	208/230-3-60	5	187	252	125
		460-3-60	5	432	504	125
		575-3-60	5	540	630	125
ZX/ZY/ZL	12 (10)	208/230-3-60	5	187	252	125
		460-3-60	5	432	504	125
		575-3-60	5	540	630	125
ZX/ZL	14 (12.5)	208/230-3-60	5	187	252	125
		460-3-60	5	432	504	125
		575-3-60	5	540	630	125

Capacity Performance

ZXA7, 08-14 Cooling Capacities

ZXA7 (6 Ton)

Air on Evaporator Coil		Temperature of Air on Condenser Coil															
		Total Capacity[1] (MBh)	Total Input (kW)[2]	Sensible Capacity (MBh) Return Dry Bulb (°F)						Total Capacity[1] (MBh)	Total Input (kW)[2]	Sensible Capacity (MBh) Return Dry Bulb (°F)					
CFM	WB (°F)			90	85	80	75	70	65			90	85	80	75	70	65
		75°F								85°F							
1500	77	89.8	4.1	45.1	37.4	29.8	-	-	-	84.7	4.6	41.2	34.3	27.5	-	-	-
	72	82.1	4.0	55.6	47.1	38.5	30.0	-	-	76.7	4.5	52.7	44.4	36.1	27.9	-	-
	67	74.3	3.9	66.1	56.7	47.3	38.1	30.4	-	68.8	4.4	64.2	54.5	44.8	36.2	28.4	-
	62	74.4	3.9	72.9	63.5	56.0	45.6	39.4	31.1	70.8	4.4	68.1	60.3	53.5	44.3	37.2	29.0
1800	77	91.0	4.1	51.6	40.8	29.9	-	-	-	85.5	4.6	48.6	38.0	27.4	-	-	-
	72	84.1	4.0	59.7	50.0	40.3	30.5	-	-	78.8	4.5	57.1	47.5	37.8	28.2	-	-
	67	77.2	4.0	67.8	59.2	50.6	40.3	31.1	-	72.1	4.5	65.5	56.9	48.3	38.3	28.9	-
	62	74.7	4.0	73.8	67.4	60.9	49.4	41.3	31.5	71.2	4.5	69.9	64.3	58.7	48.0	39.1	29.3
	57	60.7	3.9	60.7	60.7	60.7	60.7	51.6	41.7	59.4	4.5	59.4	59.4	59.4	59.2	49.3	39.5
2100	77	92.2	4.1	58.1	44.1	30.1	-	-	-	86.4	4.6	56.0	41.7	27.4	-	-	-
	72	86.2	4.1	63.9	52.9	42.0	31.1	-	-	80.9	4.6	61.5	50.5	39.5	28.6	-	-
	67	80.1	4.0	69.6	61.8	54.0	42.4	31.7	-	75.4	4.5	66.9	59.3	51.7	40.3	29.3	-
	62	75.1	4.0	74.6	71.2	65.9	53.3	43.2	31.9	71.6	4.5	71.6	68.3	63.8	51.8	41.1	29.7
	57	61.4	4.0	61.4	61.4	61.4	61.4	54.7	43.2	59.6	4.5	59.6	59.6	59.6	59.6	52.8	41.2
2400	77	93.4	4.1	64.7	47.5	30.3	-	-	-	87.2	4.6	63.5	45.4	27.4	-	-	-
	72	88.2	4.1	68.0	55.9	43.8	31.7	-	-	83.0	4.6	65.9	53.5	41.2	28.9	-	-
	67	83.0	4.0	71.3	64.3	57.3	44.5	32.3	-	78.7	4.5	68.2	61.7	55.1	42.3	29.8	-
	62	75.4	4.0	75.4	75.1	70.8	57.1	45.1	32.3	72.0	4.5	72.0	72.0	69.0	55.6	43.0	30.0
	57	62.1	4.0	62.1	62.1	62.1	62.1	57.9	44.7	59.7	4.5	59.7	59.7	59.7	59.7	56.2	42.8
2700	72	90.2	4.1	72.1	58.8	45.5	32.3	-	-	85.1	4.6	70.3	56.6	42.9	29.3	-	-
	67	85.9	4.0	73.1	66.8	60.6	46.7	33.0	-	82.1	4.6	69.6	64.1	58.6	44.4	30.3	-
	62	75.8	4.0	75.8	75.8	75.7	61.0	47.0	32.7	72.3	4.6	72.3	72.3	72.3	59.4	45.0	30.4
	57	62.8	4.1	62.8	62.8	62.8	62.8	61.0	46.1	59.9	4.6	59.9	59.9	59.9	59.9	59.6	44.5
3000	72	92.3	4.1	76.2	61.8	47.3	32.8	-	-	87.2	4.6	74.7	59.6	44.6	29.6	-	-
	67	88.8	4.1	74.8	69.4	64.0	48.8	33.6	-	85.4	4.6	71.0	66.5	62.0	46.4	30.8	-
	62	76.2	4.1	76.2	76.2	76.2	64.8	48.9	33.0	72.7	4.6	72.7	72.7	72.7	63.1	46.9	30.7
	57	63.5	4.1	63.5	63.5	63.5	63.5	63.5	47.6	60.0	4.6	60.0	60.0	60.0	60.0	60.0	46.2
		95°F								105°F							
1500	77	79.5	5.1	37.2	31.2	25.1	-	-	-	76.5	5.8	35.3	29.1	23.0	-	-	-
	72	71.4	5.0	49.7	41.7	33.8	25.8	-	-	67.1	5.7	47.4	39.5	31.6	23.6	-	-
	67	63.2	4.9	62.2	52.3	42.4	34.4	26.4	-	57.7	5.7	57.7	49.9	40.2	32.1	24.1	-
	62	67.3	4.9	63.3	57.2	51.0	43.0	34.9	26.8	63.8	5.7	59.9	54.3	48.7	40.6	32.4	24.3
1800	77	80.0	5.1	45.6	35.2	24.9	-	-	-	75.3	5.8	43.6	33.2	22.7	-	-	-
	72	73.5	5.0	54.4	44.9	35.4	25.9	-	-	68.5	5.8	52.0	42.5	33.1	23.7	-	-
	67	67.0	5.0	63.2	54.6	45.9	36.3	26.7	-	61.6	5.7	60.3	51.9	43.5	33.9	24.4	-
	62	67.7	5.0	66.1	61.3	56.4	46.7	36.9	27.1	64.0	5.7	62.4	58.2	53.9	44.2	34.5	24.7
	57	58.2	5.0	58.2	58.2	58.2	57.0	47.1	37.2	59.6	5.7	59.6	59.6	59.6	54.4	44.5	34.6
2100	77	80.5	5.1	53.9	39.3	24.7	-	-	-	74.2	5.8	52.0	37.2	22.5	-	-	-
	72	75.6	5.1	59.1	48.1	37.1	26.1	-	-	69.8	5.8	56.5	45.6	34.7	23.8	-	-
	67	70.7	5.0	64.2	56.8	49.4	38.2	27.0	-	65.4	5.7	61.0	54.0	46.9	35.8	24.7	-
	62	68.1	5.0	68.1	65.4	61.8	50.4	38.9	27.4	64.3	5.7	64.3	62.0	59.1	47.8	36.5	25.1
	57	57.8	5.0	57.8	57.8	57.8	57.8	50.8	39.1	58.0	5.7	58.0	58.0	58.0	58.0	47.6	35.7
2400	77	81.1	5.1	62.3	43.4	24.4	-	-	-	73.0	5.8	60.3	41.3	22.2	-	-	-
	72	77.8	5.1	63.7	51.2	38.7	26.2	-	-	71.2	5.8	61.0	48.6	36.2	23.9	-	-
	67	74.5	5.0	65.2	59.1	53.0	40.1	27.3	-	69.3	5.8	61.7	56.0	50.3	37.6	25.0	-
	62	68.5	5.0	68.5	68.5	67.2	54.1	40.9	27.7	64.5	5.7	64.5	64.5	64.3	51.4	38.5	25.6
	57	57.4	5.0	57.4	57.4	57.4	57.4	54.5	41.0	56.4	5.7	56.4	56.4	56.4	56.4	50.6	36.7
2700	72	79.9	5.1	68.4	54.4	40.3	26.3	-	-	72.5	5.8	65.5	51.7	37.8	23.9	-	-
	67	78.2	5.1	66.1	61.3	56.5	42.0	27.6	-	73.2	5.8	62.4	58.0	53.6	39.5	25.3	-
	62	68.9	5.1	68.9	68.9	68.9	57.8	42.9	28.0	64.8	5.8	64.8	64.8	64.8	55.0	40.5	26.0
	57	57.0	5.1	57.0	57.0	57.0	57.0	57.0	42.9	54.7	5.8	54.7	54.7	54.7	54.7	53.6	37.8
3000	72	82.0	5.1	73.1	57.5	42.0	26.4	-	-	73.8	5.8	70.1	54.7	39.4	24.0	-	-
	67	81.9	5.1	67.1	63.5	60.0	43.9	27.9	-	77.0	5.8	63.1	60.1	57.0	41.3	25.6	-
	62	69.3	5.1	69.3	69.3	69.3	61.5	44.9	28.4	65.0	5.8	65.0	65.0	65.0	58.6	42.5	26.5
	57	56.6	5.1	56.6	56.6	56.6	56.6	56.6	44.9	53.1	5.8	53.1	53.1	53.1	53.1	53.1	38.8

ZXA7 (6 Ton) (Continued)

Air on Evaporator Coil		Temperature of Air on Condenser Coil															
		Total Capacity[1] (MBh)	Total Input (kW)[2]	Sensible Capacity (MBh) Return Dry Bulb (°F)						Total Capacity[1] (MBh)	Total Input (kW)[2]	Sensible Capacity (MBh) Return Dry Bulb (°F)					
CFM	WB (°F)			90	85	80	75	70	65			90	85	80	75	70	65
		115°F								125°F							
1500	77	73.4	6.5	33.3	27.1	20.8	-	-	-	70.4	7.2	31.4	25.0	18.6	-	-	-
	72	62.9	6.5	45.2	37.3	29.4	21.5	-	-	58.6	7.2	42.9	35.0	27.2	19.3	-	-
	67	52.3	6.4	52.3	47.4	37.9	29.8	21.8	-	46.8	7.2	46.8	45.0	35.7	27.6	19.5	-
	62	60.3	6.4	56.4	51.5	46.5	38.2	30.0	21.7	56.8	7.1	53.0	48.6	44.2	35.9	27.5	19.2
1800	77	70.6	6.5	41.7	31.1	20.6	-	-	-	65.9	7.2	39.7	29.0	18.4	-	-	-
	72	63.4	6.5	49.5	40.2	30.8	21.5	-	-	58.4	7.2	47.1	37.8	28.6	19.3	-	-
	67	56.2	6.5	56.2	49.3	41.1	31.6	22.1	-	50.9	7.2	50.9	46.6	38.7	29.3	19.8	-
	62	60.4	6.4	58.7	55.0	51.4	41.7	32.0	22.3	56.7	7.1	54.9	51.9	48.9	39.2	29.6	19.9
	57	61.1	6.4	59.9	59.9	59.9	51.8	41.9	32.0	62.6	7.1	55.3	55.3	55.3	49.2	39.3	29.5
2100	77	67.8	6.5	50.0	35.1	20.3	-	-	-	61.4	7.2	48.0	33.0	18.1	-	-	-
	72	64.0	6.5	53.9	43.1	32.3	21.5	-	-	58.2	7.2	51.3	40.6	30.0	19.3	-	-
	67	60.2	6.5	57.9	51.1	44.3	33.4	22.4	-	54.9	7.2	54.7	48.2	41.8	30.9	20.1	-
	62	60.5	6.4	60.5	58.6	56.4	45.2	34.0	22.9	56.7	7.2	56.7	55.2	53.6	42.6	31.6	20.6
	57	58.2	6.4	58.2	58.2	58.2	56.3	44.3	32.2	58.5	7.1	58.5	58.5	58.5	53.3	41.0	28.8
2400	77	64.9	6.5	58.3	39.2	20.0	-	-	-	56.9	7.2	56.3	37.0	17.8	-	-	-
	72	64.5	6.5	58.3	46.0	33.8	21.6	-	-	57.9	7.2	55.6	43.5	31.4	19.2	-	-
	67	64.1	6.5	58.3	52.9	47.6	35.1	22.7	-	59.0	7.2	54.9	49.9	44.9	32.6	20.4	-
	62	60.6	6.5	60.6	60.6	60.6	48.7	36.1	23.4	56.7	7.2	56.7	56.7	56.7	46.0	33.6	21.3
	57	55.3	6.4	55.3	55.3	55.3	55.3	46.6	32.4	54.3	7.1	54.3	54.3	54.3	54.3	42.7	28.1
2700	72	65.1	6.5	62.7	49.0	35.3	21.6	-	-	57.7	7.2	57.7	46.3	32.8	19.2	-	-
	67	68.1	6.5	58.7	54.8	50.8	36.9	23.0	-	63.1	7.2	55.1	51.5	47.9	34.3	20.7	-
	62	60.7	6.5	60.7	60.7	60.7	52.2	38.1	24.0	56.6	7.2	56.6	56.6	56.6	49.4	35.7	22.0
	57	52.5	6.5	52.5	52.5	52.5	52.5	49.0	32.6	50.2	7.2	50.2	50.2	50.2	50.2	44.4	27.4
3000	72	65.7	6.5	65.7	51.9	36.8	21.6	-	-	57.5	7.2	57.5	49.1	34.1	19.2	-	-
	67	72.1	6.5	59.2	56.6	54.0	38.6	23.3	-	67.1	7.2	55.2	53.1	51.0	36.0	21.0	-
	62	60.8	6.5	60.8	60.8	60.8	55.7	40.1	24.6	56.6	7.2	56.6	56.6	56.6	52.8	37.7	22.7
	57	49.6	6.5	49.6	49.6	49.6	49.6	49.6	32.8	46.1	7.2	46.1	46.1	46.1	46.1	46.1	26.8

1. These capacities are gross ratings. For net capacity, deduct the supply air blower motor heat (MBh = 3.415 x kW). Refer to the appropriate Blower Performance Table for the kW of the supply air blower motor.
2. These ratings include the condenser fan motors (total 1 kW) and the compressor motors but not the supply air blower motor.

ZX08 (7.5 Ton)

Air on Evaporator Coil		Temperature of Air on Condenser Coil															
		Total Capacity[1] (MBh)	Total Input (kW)[2]	Sensible Capacity (MBh) Return Dry Bulb (°F)						Total Capacity[1] (MBh)	Total Input (kW)[2]	Sensible Capacity (MBh) Return Dry Bulb (°F)					
CFM	WB (°F)			90	85	80	75	70	65			90	85	80	75	70	65
		75°F								85°F							
1875	77	105.6	5.4	55.0	45.4	35.9	-	-	-	100.3	6.1	53.6	44.2	34.8	-	-	-
	72	100.2	5.3	67.3	57.4	47.5	37.6	-	-	97.4	6.0	66.0	55.9	45.8	35.7	-	-
	67	94.9	5.2	79.7	69.4	59.1	48.1	38.4	-	89.8	5.8	78.3	67.5	56.7	46.1	36.1	-
	62	91.4	5.2	88.9	79.7	70.6	57.0	49.1	38.4	87.6	5.8	84.9	76.3	67.7	55.7	46.6	36.0
2250	77	107.2	5.4	59.7	47.7	35.7	-	-	-	105.8	6.1	59.2	47.0	34.9	-	-	-
	72	102.3	5.3	72.2	60.8	49.3	37.9	-	-	99.3	6.0	71.1	59.5	47.9	36.3	-	-
	67	97.4	5.2	84.8	73.9	62.9	50.6	39.2	-	92.8	5.9	82.9	71.9	60.8	48.7	37.0	-
	62	94.5	5.2	92.1	84.3	76.5	62.0	51.9	39.6	90.8	5.9	88.3	81.1	73.8	60.5	49.4	37.1
	57	92.5	5.2	92.5	92.5	90.1	77.4	64.7	51.9	89.3	5.9	89.3	89.3	86.8	74.2	61.7	49.2
2625	77	108.9	5.5	64.5	50.0	35.5	-	-	-	106.7	6.1	64.8	49.9	35.0	-	-	-
	72	104.4	5.4	77.2	64.2	51.2	38.2	-	-	101.2	6.0	76.2	63.1	50.0	36.9	-	-
	67	100.0	5.3	89.8	78.3	66.8	53.0	40.0	-	95.8	5.9	87.6	76.3	64.9	51.3	38.0	-
	62	97.6	5.3	95.3	88.9	82.4	66.9	54.7	40.9	94.0	5.9	91.7	85.8	79.9	65.2	52.2	38.3
	57	95.9	5.3	95.9	95.9	94.7	83.8	69.5	55.2	92.7	6.0	92.7	92.7	92.7	80.6	66.4	52.1
3000	77	110.5	5.5	69.3	52.3	35.4	-	-	-	107.6	6.2	70.3	52.7	35.1	-	-	-
	72	106.5	5.4	82.1	67.5	53.0	38.5	-	-	103.1	6.1	81.3	66.7	52.1	37.5	-	-
	67	102.5	5.3	94.9	82.8	70.7	55.5	40.7	-	98.7	6.0	92.2	80.6	69.0	53.9	38.9	-
	62	100.7	5.3	98.6	93.5	88.3	71.8	57.5	42.1	97.3	6.0	95.1	90.5	86.0	69.9	55.0	39.4
	57	99.3	5.4	99.3	99.3	99.3	90.1	74.3	58.5	96.0	6.0	96.0	96.0	96.0	87.0	71.0	55.0
3375	72	108.6	5.5	87.0	70.9	54.9	38.8	-	-	105.1	6.1	86.4	70.3	54.2	38.1	-	-
	67	105.1	5.3	99.9	87.2	74.6	57.9	41.5	-	101.7	6.0	96.8	85.0	73.1	56.4	39.9	-
	62	103.8	5.4	101.8	98.0	94.2	76.7	60.3	43.4	100.5	6.1	98.4	95.3	92.1	74.7	57.8	40.6
	57	102.7	5.4	102.2	102.2	102.2	96.5	79.1	61.7	99.4	6.1	99.3	99.3	99.3	93.4	75.7	57.9
3750	72	110.7	5.5	91.9	74.3	56.7	39.1	-	-	107.0	6.1	91.4	73.9	56.3	38.7	-	-
	67	107.7	5.4	105.0	91.7	78.4	60.4	42.3	-	104.7	6.1	101.4	89.3	77.3	59.0	40.8	-
	62	106.9	5.5	105.1	102.6	100.1	81.6	63.1	44.6	103.7	6.1	101.8	100.0	98.2	79.4	60.6	41.7
	57	106.1	5.5	105.2	105.2	105.2	102.9	83.9	65.0	102.8	6.2	102.2	102.2	102.2	99.8	80.3	60.9
		95°F								105°F							
1875	77	95.0	6.8	52.3	43.0	33.7	-	-	-	90.0	7.6	50.8	41.2	31.6	-	-	-
	72	94.5	6.6	64.6	54.3	44.0	33.8	-	-	87.7	7.5	62.0	51.8	41.5	31.2	-	-
	67	84.8	6.5	76.9	65.7	54.4	44.1	33.7	-	79.2	7.4	73.3	62.3	51.4	41.1	30.8	-
	62	83.8	6.5	81.0	72.9	64.8	54.4	44.0	33.6	78.4	7.4	76.1	68.7	61.2	51.0	40.7	30.5
2250	77	104.3	6.8	58.6	46.3	34.1	-	-	-	96.5	7.6	57.2	44.4	31.7	-	-	-
	72	96.2	6.7	69.9	58.1	46.4	34.7	-	-	89.5	7.5	67.1	55.4	43.6	31.9	-	-
	67	88.2	6.5	81.1	69.9	58.7	46.8	34.9	-	82.4	7.4	77.1	66.4	55.6	43.7	31.8	-
	62	87.1	6.5	84.5	77.8	71.1	58.9	46.8	34.7	81.6	7.5	79.5	73.6	67.6	55.6	43.5	31.4
	57	86.1	6.6	86.1	85.7	83.4	71.1	58.7	46.4	80.8	7.5	80.8	80.7	79.6	67.4	55.2	43.0
2625	77	104.5	6.8	65.0	49.7	34.4	-	-	-	96.9	7.7	63.6	47.6	31.7	-	-	-
	72	98.0	6.7	75.2	62.0	48.8	35.5	-	-	91.3	7.6	72.2	59.0	45.8	32.6	-	-
	67	91.5	6.6	85.3	74.2	63.1	49.5	36.0	-	85.7	7.5	80.9	70.4	59.9	46.3	32.8	-
	62	90.5	6.6	88.0	82.7	77.4	63.5	49.6	35.7	84.8	7.5	82.9	78.4	74.0	60.1	46.2	32.4
	57	89.4	6.6	89.4	89.4	89.4	77.5	63.2	49.0	84.0	7.5	84.0	84.0	84.0	73.9	59.7	45.5
3000	77	104.6	6.8	71.4	53.1	34.8	-	-	-	97.3	7.7	70.0	50.9	31.8	-	-	-
	72	99.8	6.7	80.4	65.8	51.1	36.4	-	-	93.1	7.6	77.4	62.7	48.0	33.3	-	-
	67	94.9	6.6	89.5	78.5	67.4	52.2	37.1	-	89.0	7.5	84.8	74.5	64.2	49.0	33.8	-
	62	93.8	6.7	91.5	87.6	83.7	68.1	52.4	36.7	88.0	7.6	86.3	83.3	80.4	64.7	49.0	33.3
	57	92.8	6.7	92.8	92.8	92.8	83.9	67.7	51.6	87.2	7.6	87.2	87.2	87.2	80.4	64.2	48.0
3375	72	101.5	6.8	85.7	69.6	53.5	37.3	-	-	95.0	7.7	82.5	66.3	50.1	34.0	-	-
	67	98.3	6.7	93.7	82.7	71.7	55.0	38.2	-	92.3	7.6	88.6	78.5	68.4	51.6	34.8	-
	62	97.2	6.7	95.0	92.5	90.0	72.6	55.2	37.8	91.2	7.6	89.7	88.2	86.7	69.2	51.8	34.3
	57	96.1	6.7	96.1	96.1	96.1	90.3	72.2	54.2	90.5	7.7	90.5	90.5	90.5	86.9	68.7	50.6
3750	72	103.3	6.8	91.0	73.4	55.8	38.2	-	-	96.8	7.7	87.6	69.9	52.3	34.7	-	-
	67	101.7	6.7	97.9	87.0	76.1	57.7	39.3	-	95.6	7.7	92.4	82.6	72.7	54.2	35.8	-
	62	100.6	6.8	98.5	97.4	96.3	77.2	58.0	38.8	94.5	7.7	93.1	93.1	93.1	73.8	54.5	35.2
	57	99.4	6.8	99.2	99.2	99.2	96.7	76.7	56.8	93.7	7.7	93.7	93.7	93.7	93.4	73.3	53.1

ZX08 (7.5 Ton) (Continued)

Air on Evaporator Coil		Temperature of Air on Condenser Coil															
		Total Capacity[1] (MBh)	Total Input (kW)[2]	Sensible Capacity (MBh) Return Dry Bulb (°F)						Total Capacity[1] (MBh)	Total Input (kW)[2]	Sensible Capacity (MBh) Return Dry Bulb (°F)					
CFM	WB (°F)			90	85	80	75	70	65			90	85	80	75	70	65
		115°F								125°F							
1875	77	85.1	8.5	49.4	39.4	29.5	-	-	-	80.1	9.4	47.9	37.6	27.4	-	-	-
	72	80.8	8.4	59.5	49.2	38.9	28.6	-	-	74.0	9.3	56.9	46.6	36.3	26.0	-	-
	67	73.5	8.3	69.6	59.0	48.3	38.1	27.9	-	67.9	9.2	66.0	55.6	45.3	35.1	25.0	-
	62	73.0	8.3	71.2	64.5	57.7	47.6	37.5	27.4	67.7	9.2	66.3	60.2	54.2	44.2	34.2	24.2
2250	77	88.7	8.5	55.7	42.5	29.2	-	-	-	80.9	9.4	54.3	40.6	26.8	-	-	-
	72	82.7	8.4	64.4	52.6	40.9	29.1	-	-	76.0	9.3	61.7	49.9	38.1	26.3	-	-
	67	76.7	8.3	73.1	62.8	52.5	40.6	28.8	-	71.0	9.2	69.1	59.2	49.4	37.6	25.7	-
	62	76.1	8.4	74.5	69.3	64.1	52.2	40.2	28.2	70.6	9.3	69.5	65.1	60.7	48.8	36.9	25.0
	57	75.5	8.4	75.5	75.5	75.5	63.7	51.6	39.5	70.2	9.3	69.8	69.8	69.8	60.0	48.0	36.1
2625	77	89.3	8.5	62.1	45.6	29.0	-	-	-	81.7	9.4	60.7	43.5	26.3	-	-	-
	72	84.6	8.5	69.3	56.1	42.9	29.6	-	-	77.9	9.4	66.4	53.2	39.9	26.7	-	-
	67	79.9	8.4	76.5	66.6	56.7	43.2	29.6	-	74.1	9.3	72.2	62.8	53.5	40.0	26.5	-
	62	79.2	8.4	77.7	74.2	70.6	56.7	42.9	29.1	73.5	9.3	72.6	69.9	67.1	53.3	39.5	25.7
	57	78.6	8.5	78.6	78.6	78.6	70.3	56.2	42.0	73.2	9.4	73.1	73.1	73.1	66.7	52.6	38.5
3000	77	89.9	8.5	68.5	48.7	28.8	-	-	-	82.6	9.4	67.1	46.4	25.8	-	-	-
	72	86.5	8.5	74.3	59.6	44.8	30.1	-	-	79.9	9.4	71.2	56.4	41.7	27.0	-	-
	67	83.1	8.5	80.0	70.5	60.9	45.7	30.5	-	77.2	9.4	75.2	66.5	57.7	42.4	27.2	-
	62	82.2	8.5	81.0	79.0	77.0	61.3	45.6	29.9	76.4	9.4	75.8	74.7	73.6	57.9	42.2	26.5
	57	81.7	8.5	81.7	81.7	81.7	76.9	60.7	44.5	76.2	9.5	76.2	76.2	76.2	73.4	57.2	41.0
3375	72	88.4	8.5	79.2	63.0	46.8	30.6	-	-	81.8	9.4	75.9	59.7	43.5	27.3	-	-
	67	86.3	8.5	83.5	74.3	65.1	48.3	31.4	-	80.3	9.5	78.3	70.1	61.8	44.9	28.0	-
	62	85.3	8.6	84.3	83.9	83.4	65.9	48.3	30.8	79.3	9.5	78.9	78.9	78.9	62.5	44.9	27.3
	57	84.8	8.6	84.8	84.8	84.8	83.5	65.2	47.0	79.2	9.5	79.2	79.2	79.2	79.2	61.8	43.4
3750	72	90.3	8.6	84.1	66.5	48.8	31.1	-	-	83.8	9.5	80.7	63.0	45.3	27.6	-	-
	67	89.5	8.6	86.9	78.1	69.3	50.8	32.3	-	83.3	9.5	81.4	73.7	65.9	47.3	28.7	-
	62	88.3	8.6	87.6	87.6	87.6	70.4	51.0	31.6	82.2	9.6	82.1	82.1	82.1	67.1	47.5	28.0
	57	87.9	8.7	87.9	87.9	87.9	87.9	69.8	49.5	82.2	9.6	82.2	82.2	82.2	82.2	66.3	45.9

1. These capacities are gross ratings. For net capacity, deduct the supply air blower motor heat (MBh = 3.415 x kW). Refer to the appropriate Blower Performance Table for the kW of the supply air blower motor.
2. These ratings include the condenser fan motors (total 1 kW) and the compressor motors but not the supply air blower motor.

ZX09 (8.5 Ton)

Air on Evaporator Coil		Temperature of Air on Condenser Coil															
		Total Capacity[1] (MBh)	Total Input (kW)[2]	Sensible Capacity (MBh) Return Dry Bulb (°F)						Total Capacity[1] (MBh)	Total Input (kW)[2]	Sensible Capacity (MBh) Return Dry Bulb (°F)					
CFM	WB (°F)			90	85	80	75	70	65			90	85	80	75	70	65
		75°F								85°F							
2125	77	126.8	6.3	67.0	53.9	40.8	-	-	-	121.9	7.0	65.6	53.5	41.3	-	-	-
	72	118.4	6.2	80.7	68.2	55.7	43.3	-	-	113.1	6.9	78.8	66.5	54.3	42.0	-	-
	67	109.9	6.1	94.4	82.5	70.7	56.6	44.6	-	104.2	6.8	91.9	79.6	67.3	54.3	42.4	-
	62	104.0	6.0	103.0	94.3	85.6	67.8	58.4	44.7	97.7	6.7	97.3	88.7	80.2	65.6	55.0	42.4
2550	77	126.8	6.4	71.8	56.6	41.4	-	-	-	121.5	7.1	70.8	55.9	41.1	-	-	-
	72	119.2	6.2	85.4	71.5	57.6	43.7	-	-	113.9	7.0	83.5	69.8	56.1	42.4	-	-
	67	111.7	6.1	98.9	86.4	73.8	58.6	45.2	-	106.4	6.9	96.3	83.7	71.2	56.8	43.3	-
	62	106.9	6.0	106.1	98.0	90.0	72.0	60.6	45.9	101.1	6.8	100.7	93.5	86.2	70.4	57.9	43.7
	57	106.2	5.9	106.2	106.2	106.2	91.1	76.0	60.9	100.8	6.7	100.8	100.8	100.8	86.9	72.4	58.0
2975	77	126.7	6.4	76.6	59.3	42.0	-	-	-	121.1	7.1	75.9	58.4	40.8	-	-	-
	72	120.1	6.3	90.0	74.7	59.4	44.1	-	-	114.8	7.0	88.3	73.1	58.0	42.8	-	-
	67	113.4	6.2	103.5	90.2	76.9	60.7	45.9	-	108.5	6.9	100.6	87.9	75.1	59.3	44.2	-
	62	109.8	6.1	109.2	101.8	94.4	76.1	62.9	47.1	104.6	6.8	104.2	98.2	92.3	75.2	60.7	44.9
	57	109.3	6.0	109.3	109.3	109.3	95.9	79.9	63.9	104.3	6.8	104.3	104.3	104.3	93.3	77.2	61.1
3400	77	126.7	6.5	81.3	61.9	42.5	-	-	-	120.6	7.2	81.1	60.8	40.6	-	-	-
	72	120.9	6.3	94.7	78.0	61.3	44.6	-	-	115.6	7.1	93.0	76.4	59.8	43.2	-	-
	67	115.1	6.2	108.0	94.0	80.0	62.8	46.5	-	110.6	7.0	104.9	92.0	79.0	61.8	45.0	-
	62	112.7	6.2	112.3	105.5	98.7	80.3	65.1	48.4	108.0	6.9	107.6	102.9	98.3	80.1	63.5	46.2
	57	112.3	6.1	112.3	112.3	112.3	100.6	83.8	66.9	107.8	6.9	107.8	107.8	107.8	99.8	82.0	64.3
3825	72	121.7	6.4	99.3	81.2	63.1	45.0	-	-	116.5	7.1	97.8	79.7	61.6	43.6	-	-
	67	116.8	6.2	112.5	97.8	83.1	64.9	47.2	-	112.8	7.0	109.3	96.1	83.0	64.3	45.9	-
	62	115.6	6.2	115.4	109.2	103.1	84.4	67.4	49.6	111.4	7.0	111.1	107.7	104.3	84.9	66.4	47.4
	57	115.4	6.2	115.4	115.4	115.4	105.4	87.6	69.9	111.3	7.0	111.3	111.3	111.3	106.2	86.8	67.4
4250	72	122.6	6.4	104.0	84.5	65.0	45.5	-	-	117.4	7.2	102.5	83.0	63.5	43.9	-	-
	67	118.5	6.3	117.0	101.6	86.2	67.0	47.8	-	114.9	7.1	113.6	100.3	86.9	66.8	46.8	-
	62	118.5	6.3	118.5	113.0	107.5	88.6	69.7	50.8	114.8	7.1	114.5	112.4	110.3	89.7	69.2	48.6
	57	118.5	6.3	118.5	118.5	118.5	110.1	91.5	72.9	114.8	7.1	114.8	114.8	114.8	112.7	91.6	70.5
		95°F								105°F							
2125	77	117.0	7.7	64.2	53.0	41.8	-	-	-	108.3	8.8	63.8	51.9	39.9	-	-	-
	72	107.8	7.7	76.8	64.8	52.8	40.8	-	-	100.1	8.7	74.7	62.6	50.5	38.3	-	-
	67	98.5	7.6	89.4	76.6	63.8	52.0	40.3	-	92.0	8.6	85.6	73.3	61.0	49.2	37.3	-
	62	91.4	7.5	91.4	83.2	74.8	63.3	51.7	40.2	87.1	8.5	87.1	79.4	71.5	60.0	48.5	36.9
2550	77	116.2	7.8	69.8	55.3	40.7	-	-	-	109.4	8.8	68.6	53.4	38.2	-	-	-
	72	108.6	7.7	81.7	68.2	54.7	41.1	-	-	102.1	8.7	78.9	65.4	51.9	38.4	-	-
	67	101.1	7.6	93.6	81.1	68.6	55.0	41.4	-	94.8	8.6	89.1	77.4	65.6	52.0	38.3	-
	62	95.4	7.5	95.4	88.9	82.5	68.8	55.1	41.4	90.9	8.5	90.6	85.0	79.4	65.6	51.7	37.9
	57	95.4	7.4	95.4	95.4	95.4	82.6	68.9	55.1	90.8	8.5	90.8	90.8	90.8	79.1	65.1	51.1
2975	77	115.4	7.8	75.3	57.5	39.6	-	-	-	110.6	8.8	73.4	54.9	36.4	-	-	-
	72	109.5	7.7	86.6	71.5	56.5	41.5	-	-	104.1	8.8	83.1	68.2	53.3	38.5	-	-
	67	103.6	7.7	97.8	85.5	73.3	57.9	42.5	-	97.6	8.7	92.7	81.5	70.3	54.8	39.3	-
	62	99.3	7.6	99.2	94.7	90.2	74.3	58.5	42.7	94.5	8.6	93.9	90.6	87.2	71.1	55.0	38.9
	57	99.3	7.5	99.3	99.3	99.3	90.8	74.6	58.4	94.3	8.6	94.3	94.3	94.3	87.5	70.7	54.0
3400	77	114.6	7.9	80.9	59.7	38.6	-	-	-	111.7	8.9	78.2	56.4	34.6	-	-	-
	72	110.4	7.8	91.4	74.9	58.3	41.8	-	-	106.1	8.8	87.2	71.0	54.8	38.6	-	-
	67	106.2	7.7	101.9	90.0	78.1	60.8	43.6	-	100.4	8.7	96.3	85.6	74.9	57.6	40.3	-
	62	103.3	7.7	103.0	100.4	97.8	79.9	61.9	44.0	98.1	8.7	97.2	96.2	95.1	76.7	58.3	39.9
	57	103.2	7.6	103.2	103.2	103.2	98.9	80.3	61.6	97.7	8.7	97.7	97.7	97.7	95.8	76.3	56.8
3825	72	111.2	7.8	96.3	78.2	60.1	42.1	-	-	108.0	8.8	91.4	73.8	56.2	38.6	-	-
	67	108.7	7.8	106.1	94.5	82.8	63.7	44.7	-	103.3	8.8	99.8	89.7	79.6	60.5	41.3	-
	62	107.2	7.7	106.7	106.1	105.5	85.4	65.3	45.2	101.7	8.8	100.5	100.5	100.5	82.3	61.6	40.9
	57	107.2	7.7	107.2	107.2	107.2	107.1	86.0	64.8	101.2	8.8	101.2	101.2	101.2	101.2	81.8	59.6
4250	72	112.1	7.9	101.1	81.6	62.0	42.4	-	-	110.0	8.9	95.6	76.6	57.7	38.7	-	-
	67	111.3	7.8	110.2	98.9	87.6	66.7	45.8	-	106.1	8.9	103.4	93.8	84.2	63.3	42.3	-
	62	111.2	7.8	110.5	110.5	110.5	90.9	68.7	46.5	105.4	8.9	103.8	103.8	103.8	87.8	64.9	41.9
	57	111.1	7.8	110.8	110.8	110.8	110.8	91.6	68.1	104.6	8.9	104.3	104.3	104.3	104.3	87.4	62.4

ZX09 (8.5 Ton) (Continued)

Air on Evaporator Coil		Temperature of Air on Condenser Coil															
		Total Capacity[1] (MBh)	Total Input (kW)[2]	Sensible Capacity (MBh) Return Dry Bulb (°F)						Total Capacity[1] (MBh)	Total Input (kW)[2]	Sensible Capacity (MBh) Return Dry Bulb (°F)					
CFM	WB (°F)			90	85	80	75	70	65			90	85	80	75	70	65
		115°F								125°F							
2125	77	99.6	9.8	63.4	50.7	38.0	-	-	-	91.0	10.8	63.0	49.6	36.1	-	-	-
	72	92.5	9.6	72.5	60.3	48.1	35.9	-	-	84.9	10.6	70.4	58.1	45.7	33.4	-	-
	67	85.4	9.5	81.7	69.9	58.2	46.3	34.4	-	78.9	10.5	77.8	66.6	55.3	43.4	31.5	-
	62	82.9	9.5	82.9	75.6	68.2	56.7	45.2	33.7	78.6	10.5	78.6	71.9	65.0	53.4	41.9	30.4
2550	77	102.7	9.8	67.4	51.5	35.6	-	-	-	95.9	10.8	66.3	49.6	33.0	-	-	-
	72	95.6	9.7	76.1	62.6	49.2	35.7	-	-	89.1	10.7	73.2	59.8	46.4	33.0	-	-
	67	88.5	9.6	84.7	73.7	62.7	49.0	35.3	-	82.2	10.6	80.2	70.0	59.8	46.0	32.3	-
	62	86.5	9.6	85.9	81.1	76.3	62.3	48.3	34.4	82.0	10.6	81.1	77.2	73.2	59.1	45.0	30.8
	57	86.3	9.5	86.3	86.3	86.3	75.6	61.4	47.2	81.8	10.6	81.8	81.8	81.8	72.1	57.7	43.2
2975	77	105.7	9.8	71.5	52.3	33.1	-	-	-	100.9	10.9	69.6	49.7	29.9	-	-	-
	72	98.7	9.8	79.6	64.9	50.2	35.5	-	-	93.3	10.8	76.1	61.6	47.1	32.6	-	-
	67	91.6	9.7	87.6	77.5	67.3	51.7	36.2	-	85.6	10.7	82.6	73.4	64.3	48.6	33.0	-
	62	89.7	9.7	88.7	86.5	84.3	67.9	51.5	35.1	84.9	10.7	83.5	82.4	81.4	64.7	48.0	31.3
	57	89.2	9.7	89.2	89.2	89.2	84.1	66.8	49.6	84.2	10.7	84.2	84.2	84.2	80.8	63.0	45.2
3400	77	108.8	9.9	75.5	53.1	30.7	-	-	-	105.9	10.9	72.8	49.8	26.8	-	-	-
	72	101.8	9.8	83.1	67.2	51.3	35.4	-	-	97.4	10.8	78.9	63.3	47.7	32.2	-	-
	67	94.7	9.8	90.6	81.2	71.8	54.4	37.1	-	89.0	10.8	84.9	76.8	68.7	51.3	33.8	-
	62	93.0	9.8	91.5	91.5	91.5	73.5	54.7	35.8	87.8	10.8	85.8	85.8	85.8	70.4	51.1	31.7
	57	92.2	9.8	92.2	92.2	92.2	92.2	72.3	52.0	86.7	10.8	86.6	86.6	86.6	86.6	68.3	47.1
3825	72	104.8	9.9	86.6	69.4	52.3	35.2	-	-	101.6	10.9	81.7	65.1	48.4	31.7	-	-
	67	97.8	9.8	93.6	85.0	76.4	57.2	37.9	-	92.4	10.9	87.3	80.2	73.2	53.9	34.6	-
	62	96.2	9.9	94.3	94.3	94.3	79.1	57.8	36.5	90.8	10.9	88.1	88.1	88.1	76.0	54.1	32.2
	57	95.1	9.9	95.1	95.1	95.1	95.1	77.7	54.3	89.1	11.0	89.0	89.0	89.0	89.0	73.6	49.1
4250	72	107.9	9.9	90.1	71.7	53.4	35.0	-	-	105.8	10.9	84.6	66.8	49.1	31.3	-	-
	67	100.9	9.9	96.5	88.7	80.9	59.9	38.8	-	95.8	11.0	89.7	83.7	77.6	56.5	35.4	-
	62	99.5	10.0	97.2	97.2	97.2	84.7	61.0	37.3	93.7	11.0	90.5	90.5	90.5	81.6	57.2	32.7
	57	98.1	10.0	97.8	97.8	97.8	97.8	83.2	56.7	91.6	11.1	91.3	91.3	91.3	91.3	78.9	51.1

1. These capacities are gross ratings. For net capacity, deduct the supply air blower motor heat (MBh = 3.415 x kW). Refer to the appropriate Blower Performance Table for the kW of the supply air blower motor.
2. These ratings include the condenser fan motors (total 1 kW) and the compressor motors but not the supply air blower motor.

ZX12 (10 Ton)

Air on Evaporator Coil		Temperature of Air on Condenser Coil															
		Total Capacity[1] (MBh)	Total Input (kW)[2]	Sensible Capacity (MBh) Return Dry Bulb (°F)						Total Capacity[1] (MBh)	Total Input (kW)[2]	Sensible Capacity (MBh) Return Dry Bulb (°F)					
CFM	WB (°F)			90	85	80	75	70	65			90	85	80	75	70	65
		75°F								85°F							
2500	77	154.9	7.6	76.9	65.4	53.8	-	-	-	145.4	8.9	73.5	62.1	50.6	-	-	-
	72	142.2	7.3	94.0	80.5	67.0	53.5	-	-	133.7	8.5	90.5	77.2	63.8	50.4	-	-
	67	129.5	7.1	111.0	95.5	80.1	66.6	53.2	-	122.1	8.1	107.5	92.2	76.9	63.5	50.1	-
	62	124.9	7.0	120.5	106.9	93.3	76.9	66.5	53.1	118.2	8.0	115.9	103.0	90.1	75.2	63.2	49.8
3000	77	156.2	7.6	84.5	68.6	52.7	-	-	-	149.4	8.5	82.5	66.3	50.2	-	-	-
	72	145.1	7.4	101.3	85.4	69.5	53.6	-	-	138.4	8.3	98.6	82.6	66.7	50.8	-	-
	67	134.1	7.2	118.1	102.2	86.3	70.1	54.1	-	127.4	8.2	114.6	98.9	83.2	67.1	51.1	-
	62	130.3	7.1	126.1	114.6	103.0	84.5	70.6	54.3	124.1	8.1	121.5	110.7	99.8	82.4	67.3	51.0
	57	126.6	7.1	126.6	126.6	119.8	103.4	87.0	70.6	121.8	8.0	121.8	121.8	116.3	99.9	83.5	67.1
3500	77	157.6	7.6	92.1	71.9	51.6	-	-	-	153.3	8.1	91.6	70.6	49.7	-	-	-
	72	148.1	7.5	108.7	90.3	72.0	53.7	-	-	143.0	8.2	106.6	88.1	69.6	51.1	-	-
	67	138.6	7.3	125.2	108.8	92.4	73.7	55.0	-	132.7	8.2	121.6	105.6	89.5	70.7	52.0	-
	62	135.8	7.2	131.8	122.3	112.8	92.0	74.7	55.6	130.0	8.1	127.2	118.3	109.5	89.5	71.4	52.3
	57	132.9	7.2	132.9	132.9	129.6	113.8	94.3	74.8	128.0	8.1	128.0	128.0	127.5	110.1	90.7	71.4
4000	77	158.9	7.7	99.7	75.1	50.5	-	-	-	157.2	7.7	100.6	74.9	49.2	-	-	-
	72	151.0	7.5	116.0	95.3	74.5	53.8	-	-	147.7	8.0	114.6	93.6	72.5	51.4	-	-
	67	143.2	7.4	132.4	115.5	98.6	77.2	55.9	-	138.1	8.3	128.7	112.2	95.8	74.3	52.9	-
	62	141.2	7.3	137.5	130.1	122.6	99.5	78.8	56.8	135.9	8.2	132.9	126.0	119.1	96.7	75.4	53.5
	57	139.3	7.3	139.3	139.3	139.3	124.1	101.6	79.1	134.2	8.2	134.2	134.2	134.2	120.2	97.9	75.7
4500	72	154.0	7.6	123.4	100.2	77.1	53.9	-	-	152.3	7.8	122.7	99.1	75.4	51.8	-	-
	67	147.7	7.4	139.5	122.1	104.7	80.8	56.8	-	143.4	8.3	135.7	118.9	102.1	77.9	53.8	-
	62	146.7	7.4	143.1	137.8	132.4	107.1	82.9	58.1	141.8	8.3	138.5	133.7	128.8	103.8	79.5	54.8
	57	145.7	7.4	145.1	145.1	145.1	134.5	108.9	83.3	140.4	8.3	140.4	140.4	140.4	130.3	105.1	79.9
5000	72	156.9	7.6	130.7	105.2	79.6	54.0	-	-	156.9	7.6	130.7	104.5	78.3	52.1	-	-
	67	152.3	7.5	146.7	128.8	110.9	84.3	57.7	-	148.7	8.4	142.8	125.6	108.4	81.6	54.7	-
	62	152.2	7.5	148.8	145.5	142.2	114.6	86.9	59.3	147.7	8.4	144.2	141.3	138.5	111.0	83.5	56.0
	57	152.0	7.5	150.9	150.9	150.9	144.9	116.2	87.5	146.6	8.5	145.6	145.6	145.6	140.4	112.3	84.2
		95°F								105°F							
2500	77	135.9	10.3	70.0	58.7	47.4	-	-	-	125.3	11.2	67.5	55.9	44.3	-	-	-
	72	125.3	9.7	87.1	73.8	60.6	47.3	-	-	117.4	10.7	84.0	70.6	57.1	43.7	-	-
	67	114.6	9.0	104.1	89.0	73.8	60.4	47.1	-	109.6	10.3	100.5	85.2	70.0	56.5	43.1	-
	62	111.5	8.9	111.3	99.1	87.0	73.5	60.0	46.5	106.6	10.1	105.3	94.1	82.8	69.4	56.0	42.5
3000	77	142.5	9.4	80.5	64.1	47.6	-	-	-	130.8	10.6	77.8	60.8	43.9	-	-	-
	72	131.6	9.3	95.8	79.8	63.9	47.9	-	-	122.7	10.5	92.0	76.1	60.1	44.1	-	-
	67	120.7	9.1	111.1	95.6	80.2	64.1	48.0	-	114.7	10.3	106.3	91.3	76.3	60.2	44.0	-
	62	117.9	9.0	116.9	106.7	96.5	80.3	64.0	47.8	112.0	10.2	110.3	101.4	92.6	76.2	59.9	43.6
	57	117.0	8.8	117.0	117.0	112.8	96.4	80.1	63.7	110.6	10.1	110.6	110.6	108.8	92.3	75.8	59.3
3500	77	149.0	8.5	91.1	69.4	47.7	-	-	-	136.3	10.0	88.0	65.7	43.5	-	-	-
	72	137.9	8.9	104.5	85.9	67.2	48.5	-	-	128.0	10.2	100.1	81.6	63.1	44.6	-	-
	67	126.9	9.2	118.0	102.3	86.6	67.8	48.9	-	119.8	10.4	112.1	97.4	82.7	63.8	45.0	-
	62	124.2	9.1	122.6	114.3	106.1	87.1	68.0	49.0	117.3	10.3	115.3	108.8	102.3	83.1	63.9	44.6
	57	123.1	9.0	123.1	123.1	123.1	106.3	87.1	68.0	115.9	10.2	115.9	115.9	115.9	102.3	82.7	63.1
4000	77	155.6	7.7	101.6	74.7	47.9	-	-	-	141.8	9.4	98.2	70.7	43.1	-	-	-
	72	144.3	8.4	113.3	91.9	70.5	49.1	-	-	133.3	10.0	108.1	87.1	66.1	45.1	-	-
	67	133.0	9.2	125.0	109.0	93.0	71.5	49.9	-	124.9	10.5	118.0	103.5	89.1	67.5	45.9	-
	62	130.5	9.2	128.3	121.9	115.6	93.8	72.1	50.3	122.7	10.4	120.2	116.1	112.0	89.9	67.8	45.7
	57	129.1	9.1	129.1	129.1	129.1	116.2	94.2	72.3	121.2	10.4	121.2	121.2	121.2	112.4	89.7	67.0
4500	72	150.6	8.0	122.0	97.9	73.8	49.7	-	-	138.6	9.7	116.1	92.6	69.1	45.5	-	-
	67	139.1	9.3	131.9	115.7	99.5	75.1	50.8	-	130.0	10.5	123.8	109.6	95.4	71.1	46.9	-
	62	136.9	9.2	133.9	129.6	125.2	100.6	76.1	51.5	128.1	10.5	125.2	123.5	121.8	96.8	71.7	46.7
	57	135.2	9.2	135.2	135.2	135.2	126.1	101.3	76.6	126.5	10.5	126.5	126.5	126.5	122.4	96.6	70.9
5000	72	156.9	7.6	130.7	103.9	77.1	50.2	-	-	143.9	9.5	124.2	98.1	72.0	46.0	-	-
	67	145.2	9.3	138.9	122.4	105.9	78.8	51.7	-	135.1	10.6	129.6	115.7	101.8	74.8	47.8	-
	62	143.2	9.3	139.6	137.2	134.7	107.4	80.1	52.8	133.4	10.6	130.2	130.2	130.2	103.6	75.7	47.8
	57	141.2	9.4	140.3	140.3	140.3	136.0	108.4	80.9	131.8	10.6	130.8	130.8	130.8	130.8	103.6	74.7

ZX12 (10 Ton) (Continued)

Air on Evaporator Coil		Temperature of Air on Condenser Coil															
		Total Capacity[1] (MBh)	Total Input (kW)[2]	Sensible Capacity (MBh) Return Dry Bulb (°F)						Total Capacity[1] (MBh)	Total Input (kW)[2]	Sensible Capacity (MBh) Return Dry Bulb (°F)					
CFM	WB (°F)			90	85	80	75	70	65			90	85	80	75	70	65
		115°F								125°F							
2500	77	114.7	12.0	65.0	53.1	41.1	-	-	-	104.1	12.9	62.6	50.3	38.0	-	-	-
	72	109.6	11.8	80.9	67.3	53.6	40.0	-	-	101.8	12.8	77.9	64.0	50.2	36.3	-	-
	67	104.5	11.5	96.8	81.5	66.2	52.7	39.1	-	99.4	12.7	93.2	77.8	62.4	48.8	35.2	-
	62	101.7	11.3	99.3	89.0	78.7	65.3	51.9	38.5	96.7	12.6	93.3	84.0	74.6	61.2	47.9	34.5
3000	77	119.1	11.8	75.0	57.6	40.2	-	-	-	107.4	12.9	72.2	54.3	36.5	-	-	-
	72	113.8	11.7	88.3	72.3	56.3	40.3	-	-	105.0	12.9	84.5	68.5	52.5	36.6	-	-
	67	108.6	11.5	101.5	87.0	72.5	56.3	40.1	-	102.5	12.8	96.8	82.7	68.6	52.4	36.1	-
	62	106.1	11.4	103.6	96.1	88.6	72.2	55.8	39.4	100.2	12.7	97.0	90.8	84.7	68.2	51.7	35.2
	57	104.2	11.3	104.2	104.2	104.2	88.2	71.5	54.9	97.8	12.6	97.2	97.2	97.2	84.0	67.2	50.5
3500	77	123.5	11.5	85.0	62.1	39.2	-	-	-	110.8	13.0	81.9	58.4	35.0	-	-	-
	72	118.1	11.6	95.6	77.3	59.0	40.7	-	-	108.2	12.9	91.1	73.0	54.9	36.8	-	-
	67	112.7	11.6	106.2	92.5	78.8	59.9	41.0	-	105.6	12.9	100.3	87.6	74.8	56.0	37.1	-
	62	110.5	11.6	107.9	103.2	98.6	79.1	59.7	40.2	103.6	12.8	100.6	97.7	94.8	75.1	55.5	35.8
	57	108.8	11.5	108.8	108.8	108.8	98.3	78.3	58.3	101.6	12.8	100.8	100.8	100.8	94.3	73.9	53.5
4000	77	127.9	11.2	94.9	66.6	38.3	-	-	-	114.1	13.0	91.6	62.5	33.5	-	-	-
	72	122.3	11.5	102.9	82.3	61.7	41.0	-	-	111.4	13.0	97.7	77.5	57.3	37.0	-	-
	67	116.8	11.7	110.9	98.0	85.1	63.5	42.0	-	108.7	12.9	103.9	92.5	81.1	59.6	38.0	-
	62	114.9	11.7	112.2	110.3	108.5	86.0	63.5	41.1	107.0	12.9	104.2	104.2	104.2	82.1	59.3	36.5
	57	113.3	11.6	113.3	113.3	113.3	108.5	85.1	61.7	105.4	12.9	104.4	104.4	104.4	104.4	80.5	56.4
4500	72	126.6	11.4	110.2	87.3	64.4	41.4	-	-	114.6	13.0	104.4	82.0	59.6	37.3	-	-
	67	120.8	11.8	115.6	103.5	91.4	67.1	42.9	-	111.7	13.0	107.5	97.4	87.3	63.2	39.0	-
	62	119.3	11.8	116.5	116.5	116.5	92.9	67.4	41.9	110.5	13.0	107.8	107.8	107.8	89.0	63.1	37.1
	57	117.9	11.8	117.4	117.4	117.4	117.4	91.9	65.1	109.2	13.0	108.1	108.1	108.1	108.1	87.2	59.4
5000	72	130.8	11.3	117.6	92.3	67.0	41.8	-	-	117.8	13.1	111.0	86.5	62.0	37.5	-	-
	67	124.9	11.9	120.3	109.0	97.7	70.8	43.9	-	114.8	13.1	111.1	102.3	93.6	66.7	39.9	-
	62	123.7	11.9	120.8	120.8	120.8	99.8	71.3	42.8	113.9	13.2	111.4	111.4	111.4	96.0	66.9	37.8
	57	122.4	11.9	121.3	121.3	121.3	121.3	98.7	68.6	113.0	13.2	111.7	111.7	111.7	111.7	93.8	62.4

1. These capacities are gross ratings. For net capacity, deduct the supply air blower motor heat (MBh = 3.415 x kW). Refer to the appropriate Blower Performance Table for the kW of the supply air blower motor.
2. These ratings include the condenser fan motors (total 1 kW) and the compressor motors but not the supply air blower motor.

ZX14 (12.5 Ton)

Air on Evaporator Coil		Temperature of Air on Condenser Coil															
		Total Capacity[1] (MBh)	Total Input (kW)[2]	Sensible Capacity (MBh) Return Dry Bulb (°F)						Total Capacity[1] (MBh)	Total Input (kW)[2]	Sensible Capacity (MBh) Return Dry Bulb (°F)					
CFM	WB (°F)			90	85	80	75	70	65			90	85	80	75	70	65
		75°F								85°F							
3200	77	185.1	8.9	93.2	78.5	63.9	-	-	-	176.3	9.8	92.7	76.8	60.9	-	-	-
	72	169.2	8.8	114.0	97.2	80.3	63.4	-	-	161.1	9.7	111.3	94.2	77.0	59.9	-	-
	67	153.2	8.6	134.9	115.8	96.7	79.2	63.2	-	145.8	9.7	129.9	111.5	93.1	76.0	59.6	-
	62	142.2	8.6	137.1	125.1	113.1	89.8	79.8	63.1	140.0	9.6	135.4	122.3	109.2	89.5	76.5	60.1
3750	77	185.7	9.0	103.6	82.7	61.8	-	-	-	176.6	9.9	103.1	81.0	59.0	-	-	-
	72	171.6	8.8	122.7	102.8	82.8	62.8	-	-	163.4	9.8	119.9	99.7	79.6	59.4	-	-
	67	157.6	8.7	141.8	122.8	103.7	83.0	63.4	-	150.3	9.7	136.7	118.4	100.2	79.7	59.9	-
	62	148.7	8.6	144.0	134.3	124.7	99.0	83.9	63.6	145.6	9.7	141.3	131.0	120.8	97.9	80.5	60.3
	57	147.6	8.6	146.2	145.9	145.6	125.0	104.5	83.9	144.7	9.6	144.7	143.7	141.4	121.2	101.0	80.9
4300	77	186.3	9.0	114.1	86.9	59.8	-	-	-	176.9	9.9	113.5	85.3	57.0	-	-	-
	72	174.1	8.9	131.4	108.3	85.3	62.2	-	-	165.8	9.8	128.5	105.3	82.1	59.0	-	-
	67	161.9	8.7	148.7	129.7	110.7	86.8	63.6	-	154.8	9.8	143.4	125.3	107.3	83.5	60.1	-
	62	155.2	8.7	150.9	143.5	136.2	108.1	88.1	64.0	151.2	9.7	147.2	139.8	132.4	106.4	84.4	60.4
	57	154.3	8.7	153.0	153.0	153.0	137.1	112.5	88.0	150.5	9.7	150.5	150.5	150.5	133.1	108.8	84.4
4900	77	186.9	9.1	124.5	91.2	57.8	-	-	-	177.2	10.0	124.0	89.5	55.0	-	-	-
	72	176.6	8.9	140.1	113.9	87.8	61.6	-	-	168.2	9.9	137.1	110.9	84.7	58.5	-	-
	67	166.3	8.8	155.7	136.7	117.7	90.5	63.9	-	159.2	9.8	150.2	132.3	114.3	87.2	60.3	-
	62	161.7	8.8	157.7	152.7	147.7	117.3	92.2	64.5	156.8	9.8	153.1	148.5	144.0	114.9	88.4	60.6
	57	161.0	8.7	159.8	159.8	159.8	149.1	120.6	92.1	156.2	9.8	155.9	155.9	155.9	145.0	116.5	87.9
5400	72	179.1	9.0	148.7	119.5	90.3	61.0	-	-	170.6	9.9	145.7	116.5	87.2	58.0	-	-
	67	170.6	8.8	162.6	143.7	124.7	94.3	64.1	-	163.7	9.8	157.0	139.2	121.4	90.9	60.6	-
	62	168.2	8.8	164.6	161.9	159.2	126.5	96.4	64.9	162.3	9.8	158.9	157.3	155.6	123.3	92.4	60.8
	57	167.7	8.8	166.5	166.5	166.5	161.2	128.7	96.1	161.9	9.8	160.9	160.9	160.9	157.0	124.2	91.4
6000	72	181.6	9.0	157.4	125.1	92.8	60.4	-	-	173.0	10.0	154.3	122.1	89.8	57.5	-	-
	67	175.0	8.8	169.5	150.6	131.8	98.0	64.3	-	168.2	9.9	163.8	146.2	128.5	94.7	60.8	-
	62	174.7	8.9	171.4	171.1	170.8	135.6	100.5	65.4	167.9	9.9	164.8	164.8	164.8	131.8	96.3	60.9
	57	174.5	8.9	173.3	173.3	173.3	173.2	136.7	100.2	167.7	9.9	165.9	165.9	165.9	165.9	131.9	94.8
		95°F								105°F							
3200	77	167.5	10.7	92.2	75.1	58.0	-	-	-	153.5	12.0	90.1	72.1	54.1	-	-	-
	72	153.0	10.7	108.5	91.1	73.8	56.4	-	-	141.4	12.1	104.7	87.2	69.6	52.0	-	-
	67	138.4	10.8	124.9	107.2	89.5	72.8	56.1	-	129.4	12.2	119.4	102.2	85.0	68.2	51.4	-
	62	137.8	10.7	133.7	119.4	105.2	89.2	73.2	57.2	128.7	12.1	125.5	113.0	100.5	84.4	68.3	52.2
3750	77	167.5	10.7	102.6	79.4	56.1	-	-	-	154.3	12.1	100.0	75.8	51.6	-	-	-
	72	155.2	10.8	117.1	96.7	76.4	56.0	-	-	144.1	12.2	112.6	92.2	71.8	51.4	-	-
	67	143.0	10.8	131.5	114.1	96.6	76.5	56.3	-	133.9	12.2	125.2	108.6	92.0	71.8	51.6	-
	62	142.4	10.7	138.6	127.7	116.9	96.9	77.0	57.0	133.2	12.2	130.2	121.2	112.2	92.2	72.2	52.1
	57	141.9	10.6	141.9	141.4	137.2	117.4	97.6	77.8	132.6	12.1	132.6	132.6	132.4	112.6	92.8	72.9
4300	77	167.4	10.8	113.0	83.6	54.2	-	-	-	155.1	12.2	109.9	79.4	49.0	-	-	-
	72	157.5	10.8	125.6	102.3	79.0	55.7	-	-	146.8	12.2	120.5	97.2	74.0	50.7	-	-
	67	147.6	10.8	138.2	121.0	103.8	80.2	56.6	-	138.4	12.2	131.0	115.0	98.9	75.3	51.7	-
	62	147.1	10.8	143.5	136.0	128.6	104.7	80.8	56.9	137.8	12.2	134.8	129.3	123.9	99.9	76.0	52.1
	57	146.6	10.7	146.6	146.6	146.6	129.2	105.0	80.7	137.2	12.1	137.2	137.2	137.2	124.6	100.3	76.0
4900	77	167.4	10.9	123.5	87.9	52.3	-	-	-	155.9	12.3	119.8	83.1	46.5	-	-	-
	72	159.8	10.9	134.1	107.9	81.6	55.3	-	-	149.4	12.3	128.3	102.2	76.2	50.1	-	-
	67	152.2	10.8	144.8	127.9	110.9	83.9	56.8	-	143.0	12.3	136.9	121.4	105.9	78.9	51.9	-
	62	151.8	10.8	148.4	144.3	140.3	112.4	84.6	56.7	142.4	12.2	139.4	137.5	135.6	107.7	79.9	52.0
	57	151.4	10.8	151.4	151.4	151.4	141.0	112.3	83.7	141.7	12.2	141.7	141.7	141.7	136.5	107.8	79.1
5400	72	162.1	10.9	142.7	113.4	84.2	55.0	-	-	152.1	12.3	136.2	107.3	78.3	49.4	-	-
	67	156.8	10.9	151.5	134.8	118.1	87.6	57.1	-	147.5	12.3	142.7	127.7	112.8	82.4	52.1	-
	62	156.5	10.9	153.3	152.7	152.0	120.2	88.4	56.6	146.9	12.3	144.1	144.1	144.1	115.5	83.7	51.9
	57	156.1	10.8	155.2	155.2	155.2	152.8	119.7	86.6	146.3	12.2	145.4	145.4	145.4	145.4	115.3	82.1
6000	72	164.3	11.0	151.2	119.0	86.8	54.6	-	-	154.8	12.4	144.1	112.3	80.5	48.8	-	-
	67	161.4	10.9	158.1	141.7	125.2	91.3	57.3	-	152.1	12.3	148.5	134.1	119.7	86.0	52.3	-
	62	161.1	10.9	158.2	158.2	158.2	127.9	92.2	56.4	151.5	12.3	148.7	148.7	148.7	123.2	87.6	51.9
	57	160.9	10.9	158.4	158.4	158.4	158.4	127.0	89.5	150.9	12.3	148.9	148.9	148.9	148.9	122.8	85.2

ZX14 (12.5 Ton) (Continued)

Air on Evaporator Coil		Temperature of Air on Condenser Coil															
		Total Capacity[1] (MBh)	Total Input (kW)[2]	Sensible Capacity (MBh) Return Dry Bulb (°F)						Total Capacity[1] (MBh)	Total Input (kW)[2]	Sensible Capacity (MBh) Return Dry Bulb (°F)					
CFM	WB (°F)			90	85	80	75	70	65			90	85	80	75	70	65
		115°F								125°F							
3200	77	139.5	13.4	88.0	69.1	50.2	-	-	-	125.5	14.8	85.9	66.1	46.2	-	-	-
	72	129.9	13.5	100.9	83.2	65.4	47.6	-	-	118.4	14.9	97.1	79.2	61.2	43.2	-	-
	67	120.3	13.6	113.9	97.2	80.6	63.6	46.6	-	111.3	15.0	108.4	92.3	76.2	59.0	41.9	-
	62	119.6	13.6	117.4	106.6	95.8	79.6	63.4	47.3	110.5	15.0	109.2	100.2	91.1	74.9	58.6	42.3
3750	77	141.1	13.5	97.4	72.2	47.0	-	-	-	128.0	14.9	94.8	68.6	42.4	-	-	-
	72	133.0	13.6	108.1	87.6	67.2	46.7	-	-	121.8	15.0	103.7	83.1	62.6	42.0	-	-
	67	124.8	13.6	118.9	103.1	87.3	67.0	46.8	-	115.7	15.1	112.6	97.6	82.7	62.3	42.0	-
	62	124.0	13.6	121.7	114.6	107.5	87.4	67.3	47.3	114.9	15.0	113.3	108.0	102.8	82.7	62.5	42.4
	57	123.3	13.5	123.3	123.3	123.3	107.8	87.9	68.1	114.0	15.0	114.0	114.0	114.0	103.0	83.1	63.2
4300	77	142.8	13.5	106.8	75.3	43.8	-	-	-	130.4	14.9	103.6	71.1	38.6	-	-	-
	72	136.0	13.6	115.3	92.1	68.9	45.7	-	-	125.3	15.0	110.2	87.1	63.9	40.8	-	-
	67	129.3	13.7	123.9	109.0	94.0	70.5	46.9	-	120.1	15.1	116.8	103.0	89.2	65.6	42.1	-
	62	128.5	13.6	126.1	122.6	119.2	95.2	71.2	47.3	119.2	15.1	117.4	115.9	114.4	90.5	66.5	42.5
	57	127.7	13.6	127.7	127.7	127.7	119.9	95.6	71.3	118.2	15.0	118.0	118.0	118.0	115.3	90.9	66.5
4875	77	144.4	13.6	116.1	78.4	40.7	-	-	-	132.9	14.9	112.5	73.7	34.8	-	-	-
	72	139.1	13.6	122.5	96.6	70.7	44.8	-	-	128.7	15.0	116.7	91.0	65.3	39.5	-	-
	67	133.8	13.7	128.9	114.8	100.8	73.9	47.0	-	124.5	15.1	121.0	108.3	95.7	68.9	42.1	-
	62	132.9	13.6	130.4	130.4	130.4	103.0	75.1	47.3	123.5	15.1	121.5	121.5	121.5	98.3	70.4	42.6
	57	132.1	13.6	132.0	132.0	132.0	132.0	103.3	74.5	122.4	15.0	121.9	121.9	121.9	121.9	98.8	69.9
5400	72	142.2	13.7	129.7	101.1	72.5	43.9	-	-	132.2	15.1	123.3	94.9	66.6	38.3	-	-
	67	138.3	13.7	134.0	120.7	107.5	77.3	47.1	-	129.0	15.2	125.2	113.7	102.2	72.2	42.2	-
	62	137.4	13.7	134.8	134.8	134.8	110.8	79.0	47.3	127.8	15.1	125.5	125.5	125.5	106.1	74.4	42.7
	57	136.5	13.6	135.6	135.6	135.6	135.6	110.9	77.7	126.6	15.0	125.9	125.9	125.9	125.9	106.6	73.2
6000	72	145.2	13.7	136.9	105.6	74.3	42.9	-	-	135.7	15.1	129.8	98.9	68.0	37.1	-	-
	67	142.7	13.8	139.0	126.6	114.2	80.7	47.3	-	133.4	15.2	129.4	119.1	108.7	75.5	42.2	-
	62	141.8	13.7	139.2	139.2	139.2	118.6	82.9	47.3	132.1	15.1	129.6	129.6	129.6	113.9	78.3	42.8
	57	140.9	13.6	139.3	139.3	139.3	139.3	118.6	80.9	130.8	15.0	129.8	129.8	129.8	129.8	114.4	76.6

1. These capacities are gross ratings. For net capacity, deduct the supply air blower motor heat (MBh = 3.415 x kW). Refer to the appropriate Blower Performance Table for the kW of the supply air blower motor.
2. These ratings include the condenser fan motors (total 1 kW) and the compressor motors but not the supply air blower motor.

ZY04-12 Cooling Capacities

ZY04 (3.0 Ton)

Air on Evaporator Coil		Temperature of Air on Condenser Coil															
		Total Capacity[1] (MBh)	Total Input (kW)[2]	Sensible Capacity (MBh) Return Dry Bulb (°F)						Total Capacity[1] (MBh)	Total Input (kW)[2]	Sensible Capacity (MBh) Return Dry Bulb (°F)					
CFM	WB (°F)			90	85	80	75	70	65			90	85	80	75	70	65
		75°F								85°F							
750	77	47.1	2.1	23.2	19.7	16.3	-	-	-	45.3	2.4	22.2	18.7	15.1	-	-	-
	72	43.9	2.1	28.3	24.1	19.9	15.8	-	-	41.7	2.4	27.4	23.1	18.9	14.7	-	-
	67	40.8	2.1	33.3	28.5	23.6	19.9	15.7	-	38.1	2.4	32.5	27.6	22.7	18.8	14.6	-
	62	36.2	2.1	34.8	31.0	27.2	22.8	19.8	16.2	35.0	2.4	33.6	30.1	26.6	22.3	18.7	14.8
900	77	47.9	2.1	26.0	21.3	16.7	-	-	-	46.0	2.4	25.2	20.5	15.7	-	-	-
	72	45.1	2.1	31.0	26.1	21.2	16.4	-	-	42.8	2.4	30.0	25.1	20.3	15.4	-	-
	67	42.2	2.1	35.9	30.8	25.8	21.2	16.4	-	39.7	2.4	34.8	29.8	24.8	20.1	15.3	-
	62	38.3	2.1	37.1	33.7	30.4	25.2	21.2	16.6	37.0	2.4	35.8	32.6	29.4	24.4	20.0	15.3
	57	38.3	2.1	38.3	36.6	34.9	30.5	26.0	21.5	36.6	2.4	36.6	35.4	34.0	29.4	24.8	20.2
1050	77	48.7	2.1	28.9	23.0	17.0	-	-	-	46.6	2.4	28.2	22.3	16.3	-	-	-
	72	46.2	2.1	33.7	28.1	22.5	17.0	-	-	44.0	2.4	32.7	27.1	21.6	16.1	-	-
	67	43.6	2.1	38.4	33.2	28.0	22.6	17.0	-	41.3	2.4	37.1	32.0	26.9	21.5	15.9	-
	62	40.4	2.1	39.4	36.5	33.5	27.6	22.5	17.0	39.0	2.4	37.9	35.1	32.2	26.5	21.3	15.9
	57	40.1	2.1	40.1	39.3	38.5	33.5	28.1	22.6	38.6	2.4	38.6	37.9	37.2	32.1	26.7	21.3
1200	77	49.6	2.1	31.7	24.6	17.4	-	-	-	47.3	2.4	31.2	24.1	16.9	-	-	-
	72	47.3	2.1	36.4	30.1	23.8	17.6	-	-	45.1	2.4	35.3	29.1	23.0	16.8	-	-
	67	45.0	2.1	41.0	35.6	30.2	24.0	17.6	-	42.8	2.4	39.4	34.2	29.0	22.8	16.6	-
	62	42.5	2.1	41.7	39.2	36.7	30.0	23.9	17.5	41.0	2.3	40.1	37.5	35.0	28.7	22.6	16.5
	57	42.0	2.1	42.0	42.0	42.0	36.6	30.1	23.7	40.5	2.3	40.5	40.5	40.5	34.9	28.7	22.5
1350	72	48.4	2.1	39.1	32.1	25.1	18.2	-	-	46.2	2.4	38.0	31.1	24.3	17.5	-	-
	67	46.4	2.1	43.5	38.0	32.5	25.4	18.2	-	44.4	2.3	41.7	36.4	31.1	24.2	17.3	-
	62	44.6	2.1	44.0	41.9	39.8	32.3	25.2	17.9	43.0	2.3	42.2	40.0	37.8	30.8	24.0	17.0
	57	43.8	2.1	43.8	43.8	43.8	39.7	32.2	24.7	42.4	2.3	42.4	42.4	42.4	37.6	30.6	23.6
1500	72	49.5	2.1	41.8	34.1	26.4	18.7	-	-	47.4	2.4	40.6	33.1	25.7	18.2	-	-
	67	47.8	2.1	46.1	40.4	34.7	26.7	18.8	-	46.0	2.3	44.0	38.6	33.1	25.6	18.0	-
	62	46.7	2.1	46.3	44.6	43.0	34.7	26.5	18.3	45.0	2.3	44.4	42.5	40.6	33.0	25.3	17.6
	57	45.7	2.1	45.7	45.7	45.7	42.7	34.3	25.8	44.3	2.3	44.3	44.3	44.3	40.3	32.6	24.8
		95°F								105°F							
750	77	43.5	2.6	21.3	17.6	13.8	-	-	-	39.8	3.1	20.9	16.8	12.8	-	-	-
	72	39.4	2.6	26.5	22.2	17.9	13.6	-	-	36.7	3.1	25.1	20.9	16.7	12.5	-	-
	67	35.4	2.6	31.7	26.8	21.9	17.7	13.4	-	33.6	3.1	29.4	25.0	20.7	16.5	12.3	-
	62	33.8	2.6	32.4	29.2	25.9	21.8	17.6	13.4	32.1	3.0	30.7	27.7	24.6	20.5	16.3	12.2
900	77	44.0	2.6	24.5	19.6	14.7	-	-	-	40.2	3.1	23.9	18.6	13.3	-	-	-
	72	40.6	2.6	29.1	24.2	19.3	14.4	-	-	37.6	3.1	27.6	22.8	17.9	13.1	-	-
	67	37.1	2.6	33.7	28.8	23.9	19.0	14.2	-	35.0	3.0	31.3	26.9	22.5	17.7	12.9	-
	62	35.7	2.6	34.5	31.4	28.4	23.6	18.9	14.1	33.6	3.0	32.5	29.8	27.2	22.3	17.5	12.7
	57	35.0	2.6	35.0	34.1	33.0	28.3	23.6	18.9	32.8	3.0	32.8	32.7	31.8	27.0	22.2	17.4
1050	77	44.6	2.6	27.6	21.6	15.6	-	-	-	40.7	3.1	26.9	20.3	13.8	-	-	-
	72	41.7	2.6	31.7	26.2	20.7	15.2	-	-	38.5	3.1	30.1	24.6	19.1	13.6	-	-
	67	38.9	2.6	35.8	30.8	25.8	20.3	14.9	-	36.4	3.0	33.3	28.9	24.4	18.9	13.4	-
	62	37.5	2.6	36.5	33.7	30.9	25.5	20.2	14.8	35.2	3.0	34.2	32.0	29.7	24.2	18.8	13.3
	57	37.0	2.6	37.0	36.6	36.0	30.7	25.4	20.1	34.6	3.0	34.6	34.6	34.6	29.5	24.1	18.6
1200	77	45.1	2.6	30.8	23.6	16.4	-	-	-	41.1	3.1	29.9	22.1	14.3	-	-	-
	72	42.9	2.6	34.3	28.2	22.1	16.0	-	-	39.4	3.1	32.6	26.4	20.3	14.2	-	-
	67	40.7	2.6	37.8	32.8	27.7	21.7	15.7	-	37.8	3.0	35.3	30.8	26.3	20.1	14.0	-
	62	39.4	2.6	38.5	35.9	33.4	27.4	21.4	15.5	36.8	3.0	36.0	34.1	32.2	26.1	20.0	13.8
	57	39.0	2.6	39.0	39.0	39.0	33.1	27.2	21.3	36.3	3.0	36.3	36.3	36.3	32.1	25.9	19.8
1350	72	44.0	2.6	36.9	30.2	23.5	16.8	-	-	40.4	3.1	35.0	28.3	21.5	14.7	-	-
	67	42.4	2.6	39.9	34.8	29.7	23.0	16.4	-	39.2	3.0	37.2	32.7	28.1	21.3	14.6	-
	62	41.3	2.6	40.5	38.2	35.8	29.3	22.7	16.2	38.4	3.0	37.7	36.3	34.8	28.0	21.2	14.4
	57	41.0	2.6	41.0	41.0	41.0	35.5	29.0	22.6	38.1	3.0	38.1	38.1	38.1	34.6	27.8	21.0
1500	72	45.2	2.6	39.5	32.2	24.9	17.6	-	-	41.3	3.1	37.5	30.1	22.7	15.3	-	-
	67	44.2	2.6	42.0	36.8	31.6	24.4	17.1	-	40.6	3.0	39.2	34.6	30.0	22.6	15.1	-
	62	43.2	2.6	42.5	40.4	38.3	31.2	24.0	16.8	40.0	3.0	39.5	38.4	37.3	29.9	22.4	15.0
	57	43.0	2.6	43.0	43.0	43.0	37.9	30.9	23.8	39.8	3.0	39.8	39.8	39.8	37.2	29.7	22.2

ZY04 (3.0 Ton) (Continued)

Air on Evaporator Coil		Temperature of Air on Condenser Coil															
		Total Capacity[1] (MBh)	Total Input (kW)[2]	Sensible Capacity (MBh) Return Dry Bulb (°F)						Total Capacity[1] (MBh)	Total Input (kW)[2]	Sensible Capacity (MBh) Return Dry Bulb (°F)					
CFM	WB (°F)			90	85	80	75	70	65			90	85	80	75	70	65
		115°F								125°F							
750	77	36.2	3.6	20.4	16.1	11.7	-	-	-	32.5	4.2	20.0	15.3	10.7	-	-	-
	72	34.0	3.5	23.8	19.7	15.6	11.5	-	-	31.2	4.0	22.4	18.4	14.4	10.4	-	-
	67	31.7	3.5	27.1	23.3	19.4	15.3	11.2	-	29.9	3.9	24.9	21.5	18.2	14.2	10.1	-
	62	30.3	3.5	29.0	26.2	23.3	19.2	15.1	10.9	28.6	3.9	27.3	24.6	22.0	17.9	13.8	9.7
900	77	36.5	3.6	23.3	17.6	11.9	-	-	-	32.7	4.1	22.7	16.6	10.5	-	-	-
	72	34.6	3.5	26.1	21.3	16.6	11.8	-	-	31.7	4.0	24.6	19.9	15.2	10.5	-	-
	67	32.8	3.5	29.0	25.1	21.2	16.4	11.6	-	30.7	3.9	26.6	23.3	19.9	15.1	10.3	-
	62	31.6	3.5	30.5	28.2	25.9	21.1	16.2	11.4	29.6	3.9	28.5	26.6	24.6	19.8	14.9	10.0
	57	30.7	3.4	30.7	30.7	30.6	25.7	20.8	16.0	28.5	3.9	28.5	28.5	28.5	24.4	19.4	14.5
1050	77	36.8	3.5	26.1	19.1	12.0	-	-	-	32.9	4.0	25.4	17.8	10.3	-	-	-
	72	35.3	3.5	28.5	23.0	17.5	12.1	-	-	32.1	4.0	26.8	21.4	16.0	10.5	-	-
	67	33.9	3.5	30.8	26.9	23.0	17.5	12.0	-	31.4	3.9	28.3	25.0	21.6	16.1	10.5	-
	62	32.9	3.4	32.0	30.2	28.5	22.9	17.4	11.8	30.6	3.9	29.8	28.5	27.3	21.6	16.0	10.3
	57	32.2	3.4	32.2	32.2	32.2	28.4	22.7	17.1	29.8	3.8	29.8	29.8	29.8	27.2	21.4	15.7
1200	77	37.1	3.5	29.0	20.6	12.2	-	-	-	33.0	3.9	28.0	19.1	10.1	-	-	-
	72	36.0	3.5	30.8	24.7	18.5	12.4	-	-	32.6	4.0	29.1	22.9	16.7	10.5	-	-
	67	35.0	3.4	32.7	28.7	24.8	18.6	12.4	-	32.1	3.8	30.1	26.7	23.3	17.0	10.7	-
	62	34.2	3.4	33.5	32.3	31.1	24.8	18.5	12.2	31.5	3.8	31.0	30.5	29.9	23.5	17.1	10.6
	57	33.7	3.4	33.7	33.7	33.7	31.0	24.7	18.3	31.0	3.8	31.0	31.0	31.0	30.0	23.4	16.8
1350	72	36.7	3.5	33.2	26.3	19.5	12.6	-	-	33.0	4.0	31.3	24.4	17.5	10.6	-	-
	67	36.0	3.4	34.5	30.5	26.6	19.7	12.7	-	32.8	3.8	31.8	28.4	25.0	18.0	10.9	-
	62	35.5	3.4	35.0	34.3	33.7	26.7	19.7	12.7	32.5	3.8	32.3	32.3	32.3	25.4	18.1	10.9
	57	35.1	3.4	35.1	35.1	35.1	33.7	26.6	19.5	32.2	3.8	32.2	32.2	32.2	32.2	25.4	18.0
1500	72	37.4	3.5	35.5	28.0	20.5	12.9	-	-	33.5	3.9	33.5	25.9	18.2	10.6	-	-
	67	37.1	3.4	36.4	32.4	28.4	20.7	13.1	-	33.5	3.8	33.5	30.1	26.7	18.9	11.1	-
	62	36.7	3.4	36.5	36.4	36.3	28.6	20.8	13.1	33.5	3.8	33.5	33.5	33.5	27.2	19.2	11.2
	57	36.6	3.4	36.6	36.6	36.6	36.4	28.5	20.7	33.5	3.8	33.5	33.5	33.5	33.5	27.4	19.1

1. These capacities are gross ratings. For net capacity, deduct the supply air blower motor heat (MBh = 3.415 x kW). Refer to the appropriate Blower Performance Table for the kW of the supply air blower motor.
2. These ratings include the condenser fan motors (total 1 kW) and the compressor motors but not the supply air blower motor.

ZY05 (4.0 Ton)

Air on Evaporator Coil		Temperature of Air on Condenser Coil															
		Total Capacity[1] (MBh)	Total Input (kW)[2]	Sensible Capacity (MBh) Return Dry Bulb (°F)						Total Capacity[1] (MBh)	Total Input (kW)[2]	Sensible Capacity (MBh) Return Dry Bulb (°F)					
CFM	WB (°F)			90	85	80	75	70	65			90	85	80	75	70	65
		75°F								85°F							
1000	77	64.9	2.8	32.3	27.2	22.1	-	-	-	59.9	3.1	30.9	26.2	21.5	-	-	-
	72	58.5	2.8	38.1	32.7	27.3	21.9	-	-	55.5	3.1	36.9	31.7	26.5	21.2	-	-
	67	52.1	2.8	44.0	38.3	32.6	26.9	21.8	-	51.2	3.1	43.0	37.2	31.5	26.0	20.8	-
	62	49.9	2.7	49.3	43.6	37.9	31.5	27.1	21.7	48.9	3.1	47.3	41.9	36.5	30.6	25.7	20.3
1200	77	65.4	2.8	35.9	29.1	22.4	-	-	-	60.6	3.1	34.8	28.2	21.5	-	-	-
	72	59.9	2.8	41.6	35.3	28.9	22.5	-	-	56.8	3.1	40.4	34.1	27.8	21.6	-	-
	67	54.4	2.8	47.4	41.4	35.4	28.7	22.5	-	53.1	3.1	45.9	40.1	34.2	27.7	21.4	-
	62	52.5	2.7	51.8	46.9	42.0	34.6	28.9	22.3	51.1	3.1	49.7	45.1	40.6	33.6	27.5	20.9
	57	51.8	2.7	51.8	51.8	48.5	41.9	35.2	28.6	49.7	3.1	49.7	49.7	47.0	40.3	33.5	26.8
1400	77	66.0	2.8	39.5	31.1	22.7	-	-	-	61.3	3.2	38.8	30.1	21.5	-	-	-
	72	61.3	2.8	45.1	37.8	30.5	23.1	-	-	58.1	3.2	43.8	36.5	29.2	21.9	-	-
	67	56.7	2.8	50.8	44.5	38.3	30.6	23.2	-	55.0	3.1	48.9	42.9	37.0	29.4	21.9	-
	62	55.1	2.8	54.4	50.2	46.1	37.8	30.7	22.9	53.3	3.1	52.0	48.4	44.7	36.7	29.3	21.5
	57	54.4	2.7	54.4	54.4	52.8	46.0	38.1	30.2	52.1	3.1	52.1	52.1	51.9	44.5	36.6	28.6
1600	77	66.6	2.8	43.1	33.0	22.9	-	-	-	62.0	3.2	42.7	32.1	21.4	-	-	-
	72	62.8	2.8	48.6	40.3	32.0	23.7	-	-	59.4	3.2	47.3	38.9	30.6	22.2	-	-
	67	58.9	2.8	54.2	47.6	41.1	32.4	23.9	-	56.9	3.2	51.8	45.8	39.7	31.0	22.5	-
	62	57.7	2.8	56.9	53.5	50.2	40.9	32.4	23.6	55.6	3.2	54.4	51.6	48.9	39.8	31.0	22.1
	57	57.0	2.8	57.0	57.0	57.0	50.1	40.9	31.8	54.6	3.1	54.6	54.6	54.6	48.8	39.6	30.4
1800	72	64.2	2.8	52.1	42.9	33.6	24.3	-	-	60.7	3.2	50.7	41.3	32.0	22.6	-	-
	67	61.2	2.8	57.6	50.7	43.9	34.2	24.6	-	58.8	3.2	54.8	48.6	42.5	32.7	23.0	-
	62	60.3	2.8	59.4	56.9	54.3	44.0	34.2	24.2	57.8	3.2	56.8	54.9	53.0	42.8	32.8	22.8
	57	59.6	2.8	59.6	59.6	59.6	54.2	43.8	33.4	57.0	3.2	57.0	57.0	57.0	53.1	42.7	32.2
2000	72	65.6	2.8	55.7	45.4	35.1	24.9	-	-	62.0	3.2	54.2	43.8	33.3	22.9	-	-
	67	63.5	2.8	61.0	53.9	46.8	36.0	25.3	-	60.7	3.2	57.7	51.5	45.3	34.4	23.6	-
	62	62.9	2.8	62.0	60.2	58.4	47.2	36.0	24.8	60.0	3.2	59.2	58.2	57.2	45.9	34.6	23.4
	57	62.2	2.8	62.2	62.2	62.2	58.3	46.6	35.0	59.4	3.2	59.4	59.4	59.4	57.4	45.7	34.0
		95°F								105°F							
1000	77	55.0	3.5	29.5	25.2	20.9	-	-	-	51.7	4.1	28.6	24.4	20.3	-	-	-
	72	52.6	3.5	35.8	30.7	25.6	20.5	-	-	48.7	4.1	34.4	29.4	24.5	19.6	-	-
	67	50.2	3.5	42.0	36.2	30.3	25.1	19.8	-	46.1	4.1	40.2	34.5	28.8	23.7	18.7	-
	62	47.8	3.5	45.3	40.2	35.0	29.6	24.2	18.8	44.5	4.1	42.8	37.9	33.0	27.9	22.7	17.6
1200	77	55.8	3.5	33.8	27.2	20.6	-	-	-	52.2	4.1	32.7	26.2	19.7	-	-	-
	72	53.8	3.5	39.1	33.0	26.8	20.6	-	-	50.0	4.1	37.6	31.6	25.6	19.5	-	-
	67	51.8	3.5	44.5	38.8	33.0	26.6	20.2	-	47.7	4.1	42.5	36.9	31.4	25.2	19.0	-
	62	49.7	3.5	47.5	43.4	39.2	32.6	26.0	19.4	46.3	4.1	44.8	41.0	37.2	30.8	24.5	18.1
	57	47.6	3.6	47.6	47.6	45.4	38.6	31.8	25.0	44.9	4.1	44.9	44.9	43.0	36.5	29.9	23.4
1400	77	56.6	3.5	38.1	29.2	20.3	-	-	-	52.7	4.1	36.9	28.0	19.2	-	-	-
	72	54.9	3.5	42.5	35.3	28.0	20.7	-	-	51.2	4.1	40.8	33.7	26.6	19.5	-	-
	67	53.3	3.5	47.0	41.3	35.7	28.2	20.6	-	49.3	4.1	44.8	39.4	34.0	26.6	19.3	-
	62	51.6	3.5	49.7	46.6	43.4	35.6	27.9	20.1	48.1	4.1	46.9	44.1	41.3	33.8	26.2	18.6
	57	49.9	3.5	49.9	49.9	49.9	43.1	35.1	27.1	47.0	4.1	47.0	47.0	47.0	40.9	33.1	25.3
1600	77	57.4	3.5	42.3	31.1	19.9	-	-	-	53.3	4.1	41.0	29.9	18.7	-	-	-
	72	56.1	3.5	45.9	37.5	29.2	20.8	-	-	52.4	4.1	44.1	35.8	27.6	19.4	-	-
	67	54.8	3.5	49.5	43.9	38.4	29.7	21.0	-	50.9	4.1	47.1	41.8	36.6	28.1	19.5	-
	62	53.4	3.5	51.9	49.8	47.6	38.6	29.7	20.7	50.0	4.1	48.9	47.2	45.5	36.7	27.9	19.1
	57	52.1	3.5	52.1	52.1	52.1	47.6	38.3	29.1	49.1	4.1	49.1	49.1	49.1	45.4	36.3	27.2
1800	72	57.3	3.5	49.3	39.8	30.3	20.9	-	-	53.6	4.1	47.3	38.0	28.7	19.3	-	-
	67	56.3	3.5	52.0	46.5	41.1	31.2	21.4	-	52.5	4.1	49.5	44.3	39.2	29.5	19.8	-
	62	55.3	3.5	54.1	53.0	51.8	41.6	31.5	21.3	51.8	4.1	51.0	50.3	49.7	39.6	29.6	19.6
	57	54.3	3.5	54.3	54.3	54.3	52.0	41.5	31.1	51.2	4.1	51.2	51.2	51.2	49.8	39.5	29.1
2000	72	58.4	3.5	52.7	42.1	31.5	20.9	-	-	54.8	4.1	50.5	40.1	29.7	19.3	-	-
	67	57.8	3.5	54.5	49.1	43.8	32.8	21.8	-	54.1	4.2	51.8	46.8	41.8	30.9	20.1	-
	62	57.2	3.5	56.3	56.2	56.0	44.6	33.3	22.0	53.7	4.1	53.1	53.1	53.1	42.6	31.4	20.2
	57	56.6	3.5	56.6	56.6	56.6	56.5	44.8	33.1	53.2	4.1	53.2	53.2	53.2	53.2	42.6	31.0

ZY05 (4.0 Ton) (Continued)

Air on Evaporator Coil		Temperature of Air on Condenser Coil															
		Total Capacity[1] (MBh)	Total Input (kW)[2]	Sensible Capacity (MBh)						Total Capacity[1] (MBh)	Total Input (kW)[2]	Sensible Capacity (MBh)					
CFM	WB (°F)			Return Dry Bulb (°F)								Return Dry Bulb (°F)					
				90	85	80	75	70	65			90	85	80	75	70	65
		115°F								125°F							
1000	77	48.4	4.8	27.7	23.6	19.6	-	-	-	45.1	5.4	26.7	22.9	19.0	-	-	-
	72	44.9	4.7	33.0	28.2	23.4	18.7	-	-	41.0	5.3	31.6	27.0	22.4	17.7	-	-
	67	41.9	4.7	38.3	32.8	27.2	22.4	17.6	-	37.8	5.2	36.5	31.1	25.7	21.1	16.4	-
	62	41.1	4.6	40.3	35.6	31.0	26.1	21.2	16.3	37.8	5.2	37.8	33.4	29.0	24.4	19.7	15.1
1200	77	48.6	4.8	31.7	25.3	18.9	-	-	-	45.1	5.4	30.6	24.3	18.1	-	-	-
	72	46.1	4.7	36.1	30.2	24.3	18.4	-	-	42.3	5.3	34.5	28.8	23.1	17.4	-	-
	67	43.6	4.7	40.5	35.1	29.7	23.7	17.7	-	39.5	5.3	38.4	33.3	28.1	22.3	16.5	-
	62	42.9	4.7	42.2	38.7	35.1	29.0	22.9	16.7	39.5	5.2	39.5	36.3	33.1	27.2	21.3	15.4
	57	42.2	4.6	42.2	42.2	40.6	34.3	28.0	21.8	39.5	5.2	39.5	39.3	38.1	32.1	26.1	20.1
1400	77	48.9	4.7	35.7	26.9	18.2	-	-	-	45.0	5.3	34.5	25.8	17.1	-	-	-
	72	47.4	4.7	39.1	32.2	25.2	18.2	-	-	43.6	5.3	37.5	30.6	23.8	17.0	-	-
	67	45.3	4.7	42.6	37.4	32.2	25.1	17.9	-	41.3	5.3	40.4	35.5	30.5	23.5	16.5	-
	62	44.7	4.7	44.1	41.7	39.3	31.9	24.5	17.1	41.3	5.2	41.2	39.2	37.2	30.0	22.8	15.7
	57	44.1	4.6	44.1	44.1	44.1	38.7	31.1	23.6	41.3	5.2	41.3	41.3	41.3	36.5	29.2	21.8
1600	77	49.1	4.7	39.7	28.6	17.4	-	-	-	44.9	5.3	38.4	27.3	16.2	-	-	-
	72	48.7	4.7	42.2	34.2	26.1	18.0	-	-	44.9	5.3	40.4	32.5	24.6	16.6	-	-
	67	47.0	4.7	44.8	39.8	34.7	26.4	18.1	-	43.1	5.3	42.4	37.7	32.9	24.7	16.6	-
	62	46.5	4.7	46.0	44.7	43.4	34.8	26.2	17.5	43.1	5.2	43.0	42.1	41.3	32.9	24.4	16.0
	57	46.1	4.6	46.1	46.1	46.1	43.2	34.3	25.4	43.0	5.2	43.0	43.0	43.0	41.0	32.2	23.5
1800	72	49.9	4.7	45.3	36.1	27.0	17.8	-	-	46.3	5.3	43.3	34.3	25.3	16.3	-	-
	67	48.7	4.7	46.9	42.1	37.2	27.7	18.2	-	44.9	5.3	44.4	39.9	35.3	26.0	16.6	-
	62	48.3	4.7	47.9	47.7	47.5	37.7	27.8	17.9	44.8	5.3	44.7	44.7	44.7	35.7	26.0	16.2
	57	48.0	4.6	48.0	48.0	48.0	47.6	37.4	27.2	44.8	5.2	44.8	44.8	44.8	44.8	35.3	25.2
2000	72	51.2	4.7	48.4	38.1	27.9	17.6	-	-	47.6	5.3	46.2	36.1	26.0	15.9	-	-
	67	50.4	4.8	49.1	44.4	39.8	29.1	18.4	-	46.7	5.4	46.4	42.1	37.8	27.2	16.7	-
	62	50.1	4.7	49.8	49.8	49.8	40.5	29.4	18.3	46.6	5.3	46.5	46.5	46.5	38.5	27.5	16.5
	57	49.9	4.6	49.9	49.9	49.9	49.9	40.5	29.0	46.5	5.2	46.5	46.5	46.5	46.5	38.4	26.9

1. These capacities are gross ratings. For net capacity, deduct the supply air blower motor heat (MBh = 3.415 x kW). Refer to the appropriate Blower Performance Table for the kW of the supply air blower motor.
2. These ratings include the condenser fan motors (total 1 kW) and the compressor motors but not the supply air blower motor.

ZY06 (5.0 Ton)

Air on Evaporator Coil		Temperature of Air on Condenser Coil															
		Total Capacity[1] (MBh)	Total Input (kW)[2]	Sensible Capacity (MBh) Return Dry Bulb (°F)						Total Capacity[1] (MBh)	Total Input (kW)[2]	Sensible Capacity (MBh) Return Dry Bulb (°F)					
CFM	WB (°F)			90	85	80	75	70	65			90	85	80	75	70	65
		75°F								85°F							
1250	77	78.9	3.4	37.6	31.8	26.0	-	-	-	75.5	4.1	39.5	32.5	25.4	-	-	-
	72	71.2	3.4	46.4	39.6	32.9	26.1	-	-	67.9	3.8	46.5	39.2	31.8	24.5	-	-
	67	63.4	3.4	55.1	47.4	39.8	33.1	26.3	-	60.2	3.5	53.5	45.9	38.3	31.4	24.5	-
	62	60.2	3.3	56.9	51.8	46.7	38.1	33.2	26.5	57.8	3.7	54.7	49.7	44.7	37.3	31.8	25.3
1500	77	79.2	3.4	43.0	34.9	26.9	-	-	-	75.3	3.9	43.0	33.7	24.4	-	-	-
	72	72.7	3.4	51.1	43.0	34.9	26.9	-	-	69.0	3.8	49.4	41.2	33.0	24.8	-	-
	67	66.3	3.4	59.1	51.1	43.0	35.1	27.0	-	62.8	3.8	55.8	48.7	41.6	33.4	25.2	-
	62	63.6	3.3	60.8	55.9	51.0	41.7	35.3	27.4	60.7	3.8	58.2	54.2	50.2	41.2	33.7	25.4
	57	62.5	3.3	62.5	60.8	59.1	51.3	43.5	35.7	59.4	3.7	59.4	59.4	58.8	50.5	42.2	33.9
1750	77	79.5	3.5	48.4	38.1	27.8	-	-	-	75.1	3.6	46.6	35.0	23.4	-	-	-
	72	74.3	3.4	55.8	46.4	37.0	27.6	-	-	70.2	3.8	52.3	43.3	34.2	25.1	-	-
	67	69.2	3.4	63.1	54.7	46.2	37.0	27.8	-	65.3	4.0	58.1	51.5	44.9	35.4	25.8	-
	62	67.1	3.4	64.7	60.1	55.4	45.3	37.3	28.3	63.7	3.8	61.6	58.6	55.7	45.1	35.6	25.6
	57	66.1	3.3	66.1	65.3	64.4	55.8	46.9	38.0	62.6	3.5	62.6	62.6	62.6	55.9	45.4	34.9
2000	77	79.7	3.5	53.8	41.2	28.7	-	-	-	74.9	3.4	50.1	36.3	22.4	-	-	-
	72	75.9	3.4	60.5	49.8	39.1	28.3	-	-	71.4	3.9	55.2	45.3	35.4	25.4	-	-
	67	72.0	3.4	67.2	58.3	49.4	39.0	28.5	-	67.8	4.3	60.4	54.3	48.3	37.4	26.5	-
	62	70.5	3.4	68.7	64.2	59.8	48.8	39.4	29.1	66.6	3.8	65.0	63.1	61.2	49.0	37.5	25.7
	57	69.8	3.4	69.8	69.8	69.8	60.2	50.2	40.2	65.8	3.3	65.8	65.8	65.8	61.4	48.6	35.8
2250	72	77.5	3.5	65.2	53.1	41.1	29.1	-	-	72.5	3.9	58.1	47.3	36.5	25.7	-	-
	67	74.9	3.4	71.2	61.9	52.7	41.0	29.2	-	70.4	4.5	62.6	57.1	51.6	39.4	27.2	-
	62	74.0	3.4	72.6	68.4	64.2	52.4	41.4	30.0	69.6	3.8	68.4	67.6	66.7	52.9	39.5	25.8
	57	73.4	3.4	73.4	73.4	73.4	64.7	53.6	42.5	68.9	3.1	68.9	68.9	68.9	66.8	51.7	36.7
2500	72	79.0	3.5	69.9	56.5	43.2	29.8	-	-	73.7	3.9	61.0	49.4	37.7	26.1	-	-
	67	77.8	3.4	75.2	65.5	55.9	42.9	30.0	-	72.9	4.8	64.9	60.0	55.0	41.4	27.9	-
	62	77.4	3.4	76.5	72.6	68.6	56.0	43.5	30.9	72.5	3.8	71.9	71.9	71.9	56.8	41.4	26.0
	57	77.0	3.4	77.0	77.0	77.0	69.1	56.9	44.8	72.1	2.9	72.1	72.1	72.1	72.1	54.9	37.6
		95°F								105°F							
1250	77	72.1	4.7	41.5	33.1	24.8	-	-	-	65.0	5.3	38.6	30.7	22.7	-	-	-
	72	64.6	4.2	46.6	38.7	30.8	22.9	-	-	59.3	4.9	43.9	36.3	28.7	21.2	-	-
	67	57.0	3.7	51.8	44.3	36.8	29.7	22.6	-	53.9	4.6	49.2	42.0	34.8	27.8	20.8	-
	62	55.3	4.1	52.6	47.7	42.7	36.5	30.3	24.1	52.2	4.8	49.7	45.3	40.8	34.4	28.0	21.6
1500	77	71.4	4.3	43.1	32.5	22.0	-	-	-	65.0	5.0	41.1	30.9	20.6	-	-	-
	72	65.3	4.2	47.8	39.4	31.1	22.8	-	-	60.5	4.9	45.8	37.6	29.4	21.2	-	-
	67	59.2	4.2	52.4	46.3	40.2	31.7	23.3	-	55.9	4.9	50.4	44.3	38.1	29.8	21.4	-
	62	57.8	4.2	55.5	52.4	49.4	40.7	32.1	23.5	54.5	4.8	52.5	49.7	46.9	38.4	29.8	21.2
	57	56.4	4.1	56.4	56.4	56.4	49.7	40.9	32.2	53.2	4.8	53.2	53.2	53.2	47.0	38.2	29.5
1750	77	70.8	3.8	44.8	31.9	19.1	-	-	-	65.0	4.7	43.7	31.1	18.5	-	-	-
	72	66.1	4.3	48.9	40.1	31.4	22.6	-	-	61.6	4.9	47.6	38.8	30.0	21.2	-	-
	67	61.4	4.7	53.0	48.3	43.7	33.8	23.9	-	58.0	5.2	51.6	46.5	41.5	31.7	22.0	-
	62	60.2	4.2	58.4	57.2	56.0	44.9	33.9	22.9	56.9	4.8	55.3	54.1	53.0	42.3	31.6	20.9
	57	59.1	3.7	59.1	59.1	59.1	56.1	43.9	31.7	55.8	4.5	55.8	55.8	55.8	52.9	41.3	29.6
2000	77	70.1	3.4	46.4	31.3	16.2	-	-	-	65.1	4.3	46.2	31.3	16.3	-	-	-
	72	66.8	4.3	50.0	40.8	31.7	22.5	-	-	62.7	4.9	49.5	40.0	30.6	21.2	-	-
	67	63.6	5.2	53.6	50.3	47.1	35.8	24.5	-	60.0	5.5	52.8	48.8	44.9	33.7	22.6	-
	62	62.7	4.2	61.4	61.4	61.4	49.2	35.7	22.3	59.2	4.8	58.0	58.0	58.0	46.3	33.5	20.6
	57	61.8	3.3	61.8	61.8	61.8	61.8	46.9	31.3	58.3	4.2	58.3	58.3	58.3	58.3	44.3	29.8
2250	72	67.6	4.3	51.1	41.5	32.0	22.4	-	-	63.8	4.9	51.4	41.3	31.2	21.1	-	-
	67	65.8	5.6	54.1	52.4	50.6	37.9	25.2	-	62.0	5.8	54.0	51.1	48.2	35.7	23.2	-
	62	65.1	4.2	64.3	64.3	64.3	53.4	37.5	21.7	61.5	4.9	60.8	60.8	60.8	50.3	35.3	20.3
	57	64.5	2.8	64.5	64.5	64.5	64.5	49.9	30.9	60.9	3.9	60.9	60.9	60.9	60.9	47.4	29.9
2500	72	68.3	4.3	52.2	42.2	32.3	22.3	-	-	64.9	4.9	53.2	42.5	31.8	21.1	-	-
	67	68.0	6.1	54.7	54.4	54.1	39.9	25.8	-	64.1	6.1	55.2	53.4	51.6	37.7	23.8	-
	62	67.6	4.3	67.2	67.2	67.2	57.6	39.3	21.1	63.8	4.9	63.5	63.5	63.5	54.2	37.1	20.0
	57	67.2	2.4	67.2	67.2	67.2	67.2	52.9	30.5	63.5	3.6	63.5	63.5	63.5	63.5	50.4	30.1

ZY06 (5.0 Ton) (Continued)

Air on Evaporator Coil		Temperature of Air on Condenser Coil															
		Total Capacity[1] (MBh)	Total Input (kW)[2]	Sensible Capacity (MBh) Return Dry Bulb (°F)						Total Capacity[1] (MBh)	Total Input (kW)[2]	Sensible Capacity (MBh) Return Dry Bulb (°F)					
CFM	WB (°F)			90	85	80	75	70	65			90	85	80	75	70	65
		115°F								125°F							
1250	77	57.8	5.9	35.8	28.2	20.6	-	-	-	50.6	6.4	33.0	25.7	18.5	-	-	-
	72	54.1	5.7	41.2	33.9	26.7	19.5	-	-	48.9	6.4	38.4	31.5	24.6	17.8	-	-
	67	50.8	5.4	46.5	39.7	32.8	25.9	18.9	-	47.6	6.3	43.9	37.3	30.8	23.9	17.1	-
	62	49.1	5.5	46.9	42.9	38.9	32.3	25.6	19.0	46.0	6.2	44.1	40.5	36.9	30.1	23.3	16.5
1500	77	58.5	5.7	39.2	29.2	19.2	-	-	-	52.1	6.4	37.2	27.5	17.9	-	-	-
	72	55.6	5.6	43.8	35.7	27.6	19.6	-	-	50.7	6.3	41.8	33.9	25.9	18.0	-	-
	67	52.6	5.6	48.4	42.2	36.1	27.8	19.5	-	49.4	6.2	46.4	40.2	34.0	25.8	17.6	-
	62	51.3	5.5	49.5	47.0	44.5	36.0	27.5	19.0	48.0	6.2	46.5	44.3	42.0	33.6	25.2	16.8
	57	49.9	5.4	49.9	49.9	49.9	44.2	35.5	26.8	46.7	6.1	46.6	46.6	46.6	41.4	32.8	24.1
1750	77	59.3	5.5	42.6	30.2	17.8	-	-	-	53.6	6.3	41.5	29.4	17.2	-	-	-
	72	57.1	5.6	46.4	37.5	28.6	19.7	-	-	52.5	6.2	45.2	36.2	27.2	18.2	-	-
	67	54.5	5.7	50.2	44.8	39.3	29.7	20.0	-	51.1	6.2	48.8	43.0	37.1	27.6	18.1	-
	62	53.5	5.5	52.1	51.1	50.1	39.7	29.3	19.0	50.1	6.1	48.9	48.0	47.1	37.1	27.0	17.0
	57	52.4	5.3	52.4	52.4	52.4	49.7	38.6	27.5	49.1	6.1	49.0	49.0	49.0	46.5	36.0	25.4
2000	77	60.1	5.3	46.0	31.2	16.4	-	-	-	55.0	6.2	45.8	31.2	16.6	-	-	-
	72	58.5	5.5	49.0	39.3	29.5	19.8	-	-	54.4	6.2	48.5	38.5	28.4	18.4	-	-
	67	56.4	5.8	52.0	47.3	42.6	31.6	20.6	-	52.8	6.2	51.3	45.8	40.3	29.5	18.6	-
	62	55.6	5.5	54.7	54.7	54.7	43.4	31.2	18.9	52.1	6.1	51.4	51.4	51.4	40.6	28.9	17.2
	57	54.9	5.1	54.9	54.9	54.9	54.9	41.7	28.2	51.5	6.1	51.4	51.4	51.4	51.4	39.2	26.7
2250	72	60.0	5.5	51.6	41.0	30.5	19.9	-	-	56.2	6.1	51.9	40.8	29.7	18.6	-	-
	67	58.3	6.0	53.9	49.9	45.9	33.5	21.2	-	54.5	6.1	53.7	48.6	43.5	31.3	19.2	-
	62	57.8	5.5	57.3	57.3	57.3	47.1	33.0	18.9	54.2	6.1	53.8	53.8	53.8	44.0	30.8	17.5
	57	57.4	5.0	57.4	57.4	57.4	57.4	44.9	29.0	53.8	6.1	53.8	53.8	53.8	53.8	42.4	28.0
2500	72	61.4	5.5	54.2	42.8	31.4	20.0	-	-	58.0	6.0	55.3	43.1	31.0	18.8	-	-
	67	60.1	6.1	55.7	52.4	49.1	35.4	21.7	-	56.2	6.1	56.2	51.4	46.7	33.2	19.7	-
	62	60.0	5.5	59.9	59.9	59.9	50.9	34.9	18.9	56.2	6.1	56.2	56.2	56.2	47.5	32.6	17.7
	57	59.9	4.8	59.9	59.9	59.9	59.9	48.0	29.7	56.2	6.1	56.2	56.2	56.2	56.2	45.6	29.3

1. These capacities are gross ratings. For net capacity, deduct the supply air blower motor heat (MBh = 3.415 x kW). Refer to the appropriate Blower Performance Table for the kW of the supply air blower motor.
2. These ratings include the condenser fan motors (total 1 kW) and the compressor motors but not the supply air blower motor.

ZY07 (6.0 Ton)

Air on Evaporator Coil		Temperature of Air on Condenser Coil															
		Total Capacity[1] (MBh)	Total Input (kW)[2]	Sensible Capacity (MBh) Return Dry Bulb (°F)						Total Capacity[1] (MBh)	Total Input (kW)[2]	Sensible Capacity (MBh) Return Dry Bulb (°F)					
CFM	WB (°F)			90	85	80	75	70	65			90	85	80	75	70	65
		75°F								85°F							
1500	77	95.1	4.3	46.6	38.7	30.7	-	-	-	91.0	4.6	44.6	35.0	25.4	-	-	-
	72	86.6	4.1	57.1	48.6	40.2	31.7	-	-	82.7	4.6	55.3	45.8	36.3	26.9	-	-
	67	78.1	4.0	67.6	58.6	49.6	40.0	31.7	-	74.5	4.5	65.9	56.6	47.3	37.0	27.4	-
	62	77.0	4.0	71.7	65.4	59.1	46.4	40.2	30.7	73.5	4.4	69.7	64.0	58.3	46.2	37.4	27.0
1800	77	95.2	4.3	52.5	42.1	31.7	-	-	-	91.3	4.6	50.9	40.5	30.1	-	-	-
	72	88.3	4.2	62.1	52.3	42.5	32.7	-	-	84.6	4.6	60.5	50.6	40.8	31.0	-	-
	67	81.3	4.1	71.8	62.6	53.4	42.5	32.8	-	77.8	4.5	70.0	60.7	51.5	41.0	30.9	-
	62	80.1	4.0	75.3	69.7	64.2	50.8	42.7	31.9	76.8	4.5	73.0	67.6	62.2	50.1	40.7	30.0
	57	78.8	4.0	78.7	76.9	75.1	63.8	52.6	41.3	75.7	4.4	75.7	74.5	72.9	61.7	50.5	39.3
2100	77	95.4	4.3	58.3	45.5	32.7	-	-	-	91.7	4.7	57.3	46.1	34.9	-	-	-
	72	90.0	4.2	67.2	56.0	44.9	33.7	-	-	86.4	4.6	65.7	55.5	45.3	35.1	-	-
	67	84.5	4.1	76.1	66.6	57.1	45.1	33.9	-	81.1	4.6	74.0	64.9	55.7	44.9	34.4	-
	62	83.1	4.1	78.8	74.0	69.3	55.3	45.2	33.1	80.0	4.5	76.4	71.3	66.1	54.1	44.0	33.0
	57	81.7	4.0	81.5	80.8	79.9	69.0	56.5	44.0	78.9	4.5	78.8	77.3	75.7	65.0	53.6	42.1
2400	77	95.5	4.3	64.2	48.9	33.7	-	-	-	92.0	4.7	63.6	51.6	39.6	-	-	-
	72	91.6	4.2	72.2	59.8	47.3	34.8	-	-	88.2	4.6	70.9	60.3	49.7	39.2	-	-
	67	87.7	4.1	80.3	70.6	60.8	47.6	35.0	-	84.5	4.6	78.1	69.0	59.9	48.8	38.0	-
	62	86.2	4.1	82.3	78.4	74.4	59.7	47.7	34.4	83.2	4.6	79.8	74.9	70.0	58.0	47.3	36.0
	57	84.7	4.1	84.3	84.3	84.3	74.2	60.4	46.7	82.0	4.5	81.5	80.1	78.5	68.4	56.6	44.9
2700	72	93.3	4.3	77.3	63.5	49.6	35.8	-	-	90.1	4.7	76.1	65.1	54.2	43.3	-	-
	67	90.9	4.2	84.6	74.6	64.5	50.2	36.1	-	87.8	4.6	82.2	73.1	64.1	52.7	41.5	-
	62	89.3	4.2	85.8	82.7	79.5	64.2	50.2	35.6	86.5	4.6	83.2	78.6	73.9	61.9	50.6	38.9
	57	87.6	4.2	87.1	87.1	87.1	79.4	64.4	49.3	85.1	4.6	84.2	83.6	82.9	71.7	59.7	47.7
3000	72	95.0	4.3	82.3	67.2	52.0	36.8	-	-	91.9	4.7	81.3	70.0	58.7	47.4	-	-
	67	94.1	4.2	88.8	78.6	68.3	52.7	37.2	-	91.1	4.6	86.3	77.2	68.2	56.6	45.0	-
	62	92.3	4.2	89.4	87.0	84.6	68.7	52.7	36.8	89.7	4.6	86.6	82.2	77.8	65.8	53.9	41.9
	57	90.5	4.2	89.9	89.9	89.9	84.6	68.3	52.0	88.2	4.7	87.0	87.0	87.0	75.1	62.8	50.5
		95°F								105°F							
1500	77	86.9	5.0	42.6	31.3	20.1	-	-	-	80.8	5.6	40.9	30.9	20.8	-	-	-
	72	78.8	5.0	53.4	43.0	32.5	22.1	-	-	73.5	5.6	51.4	41.6	31.9	22.1	-	-
	67	70.8	5.0	64.2	54.6	45.0	34.1	23.2	-	66.6	5.6	61.9	52.4	42.9	32.8	22.7	-
	62	70.1	4.9	67.6	62.5	57.4	46.1	34.7	23.4	66.1	5.6	64.2	59.1	53.9	43.5	33.1	22.7
1800	77	87.4	5.0	49.4	39.0	28.6	-	-	-	81.1	5.7	47.4	36.9	26.5	-	-	-
	72	80.8	5.0	58.8	48.9	39.1	29.2	-	-	75.5	5.7	56.4	46.6	36.8	27.1	-	-
	67	74.3	5.0	68.1	58.9	49.6	39.4	29.1	-	69.8	5.6	65.3	56.3	47.2	37.1	26.9	-
	62	73.5	4.9	70.8	65.5	60.1	49.5	38.8	28.1	69.3	5.6	67.2	62.4	57.6	47.1	36.5	26.0
	57	72.6	4.8	72.6	72.1	70.7	59.6	48.5	37.4	68.7	5.5	68.7	68.5	67.9	57.0	46.2	35.3
2100	77	87.9	5.0	56.3	46.6	37.0	-	-	-	81.5	5.7	53.9	43.0	32.1	-	-	-
	72	82.8	5.0	64.1	54.9	45.7	36.4	-	-	77.4	5.7	61.3	51.5	41.8	32.0	-	-
	67	77.8	5.0	72.0	63.1	54.3	44.6	35.0	-	73.0	5.7	68.7	60.1	51.5	41.3	31.1	-
	62	76.9	4.9	74.1	68.5	62.9	52.9	42.8	32.8	72.4	5.6	70.1	65.7	61.2	50.6	40.0	29.4
	57	76.0	4.9	76.0	73.8	71.5	61.1	50.7	40.3	71.7	5.6	71.5	71.2	70.9	59.9	48.8	37.8
2400	77	88.5	5.1	63.1	54.3	45.5	-	-	-	81.8	5.7	60.4	49.1	37.7	-	-	-
	72	84.8	5.0	69.5	60.9	52.2	43.6	-	-	79.3	5.7	66.3	56.5	46.7	37.0	-	-
	67	81.2	5.0	75.9	67.4	58.9	49.9	40.9	-	76.2	5.7	72.1	63.9	55.8	45.5	35.3	-
	62	80.3	5.0	77.3	71.5	65.6	56.2	46.9	37.5	75.5	5.7	73.1	68.9	64.8	54.1	43.4	32.7
	57	79.3	5.0	78.8	75.5	72.3	62.6	52.9	43.2	74.8	5.6	74.1	74.0	73.8	62.7	51.5	40.3
2700	72	86.8	5.1	74.9	66.8	58.8	50.7	-	-	81.3	5.7	71.2	61.5	51.7	42.0	-	-
	67	84.7	5.0	79.8	71.7	63.6	55.2	46.8	-	79.4	5.7	75.5	67.8	60.1	49.8	39.5	-
	62	83.7	5.0	80.6	74.5	68.3	59.6	50.9	42.3	78.6	5.7	76.1	72.2	68.4	57.6	46.8	36.0
	57	82.6	5.0	81.4	77.2	73.1	64.1	55.1	46.0	77.9	5.7	76.6	76.6	76.6	65.5	54.1	42.8
3000	72	88.8	5.1	80.2	72.8	65.4	57.9	-	-	83.2	5.7	76.2	66.4	56.7	46.9	-	-
	67	88.2	5.0	83.7	75.9	68.2	60.5	52.7	-	82.6	5.7	78.9	71.6	64.4	54.0	43.7	-
	62	87.1	5.1	83.8	77.4	71.0	63.0	55.0	47.0	81.8	5.7	79.0	75.5	72.0	61.1	50.2	39.3
	57	86.0	5.1	84.0	79.0	73.9	65.6	57.3	48.9	80.9	5.7	79.2	79.2	79.2	68.3	56.8	45.3

ZY07 (6.0 Ton) (Continued)

Air on Evaporator Coil		Temperature of Air on Condenser Coil															
		Total Capacity[1] (MBh)	Total Input (kW)[2]	Sensible Capacity (MBh)						Total Capacity[1] (MBh)	Total Input (kW)[2]	Sensible Capacity (MBh)					
CFM	WB (°F)			Return Dry Bulb (°F)								Return Dry Bulb (°F)					
				90	85	80	75	70	65			90	85	80	75	70	65
		115°F								125°F							
1500	77	74.7	6.3	39.2	30.4	21.6	-	-	-	68.7	7.0	37.5	29.9	22.4	-	-	-
	72	68.2	6.3	49.4	40.3	31.2	22.1	-	-	62.9	7.0	47.4	39.0	30.6	22.1	-	-
	67	62.4	6.3	59.7	50.2	40.8	31.6	22.3	-	58.2	7.0	57.4	48.1	38.8	30.3	21.8	-
	62	62.2	6.2	60.8	55.6	50.4	41.0	31.5	22.1	58.3	6.9	57.5	52.2	47.0	38.4	29.9	21.4
1800	77	74.9	6.3	45.4	34.9	24.4	-	-	-	68.6	7.0	43.3	32.8	22.3	-	-	-
	72	70.1	6.3	53.9	44.3	34.6	24.9	-	-	64.7	7.0	51.5	41.9	32.3	22.7	-	-
	67	65.4	6.3	62.5	53.7	44.8	34.8	24.8	-	60.9	7.0	59.7	51.0	42.3	32.5	22.6	-
	62	65.1	6.3	63.5	59.2	55.0	44.6	34.3	24.0	60.8	6.9	59.9	56.1	52.4	42.2	32.1	21.9
	57	64.7	6.2	64.5	64.5	64.5	54.5	43.9	33.2	60.8	6.9	60.0	60.0	60.0	52.0	41.6	31.2
2100	77	75.0	6.3	51.5	39.3	27.1	-	-	-	68.5	7.0	49.2	35.7	22.2	-	-	-
	72	72.0	6.3	58.5	48.2	37.9	27.6	-	-	66.6	7.0	55.7	44.9	34.1	23.3	-	-
	67	68.3	6.3	65.4	57.1	48.7	38.0	27.2	-	63.5	7.0	62.1	54.0	45.9	34.6	23.4	-
	62	67.9	6.3	66.2	62.8	59.5	48.3	37.1	25.9	63.4	7.0	62.2	60.0	57.8	46.0	34.2	22.5
	57	67.5	6.3	66.9	66.9	66.9	58.6	47.0	35.3	63.3	6.9	62.3	62.3	62.3	57.4	45.1	32.9
2400	77	75.1	6.4	57.7	43.8	29.9	-	-	-	68.4	7.0	55.0	38.6	22.1	-	-	-
	72	73.9	6.3	63.0	52.1	41.3	30.4	-	-	68.4	7.0	59.8	47.8	35.8	23.8	-	-
	67	71.2	6.3	68.3	60.5	52.6	41.2	29.7	-	66.2	7.0	64.5	57.0	49.5	36.8	24.1	-
	62	70.8	6.3	68.8	66.4	64.0	52.0	39.9	27.8	66.0	7.0	64.6	63.9	63.2	49.8	36.4	23.0
	57	70.3	6.3	69.4	69.4	69.4	62.7	50.1	37.4	65.8	7.0	64.7	64.7	64.7	62.8	48.7	34.6
2700	72	75.7	6.4	67.5	56.1	44.6	33.2	-	-	70.2	7.0	63.9	50.7	37.5	24.4	-	-
	67	74.1	6.3	71.2	63.9	56.6	44.4	32.2	-	68.8	7.0	66.9	60.0	53.1	39.0	24.9	-
	62	73.6	6.3	71.5	70.0	68.5	55.6	42.7	29.8	68.6	7.0	67.0	67.0	67.0	53.6	38.6	23.5
	57	73.1	6.4	71.8	71.8	71.8	66.8	53.2	39.5	68.3	7.0	67.1	67.1	67.1	67.1	52.2	36.3
3000	72	77.6	6.4	72.1	60.0	48.0	35.9	-	-	72.0	7.0	68.0	53.6	39.3	24.9	-	-
	67	77.1	6.3	74.1	67.3	60.5	47.6	34.7	-	71.5	7.0	69.3	63.0	56.7	41.2	25.7	-
	62	76.5	6.4	74.2	73.6	73.0	59.3	45.5	31.7	71.2	7.0	69.4	69.4	69.4	57.4	40.7	24.1
	57	75.9	6.4	74.3	74.3	74.3	70.9	56.3	41.6	70.8	7.1	69.4	69.4	69.4	69.4	55.8	38.0

1. These capacities are gross ratings. For net capacity, deduct the supply air blower motor heat (MBh = 3.415 x kW). Refer to the appropriate Blower Performance Table for the kW of the supply air blower motor.
2. These ratings include the condenser fan motors (total 1 kW) and the compressor motors but not the supply air blower motor.

ZYA7 (6.0 Ton)

Air on Evaporator Coil		Temperature of Air on Condenser Coil															
		Total Capacity[1] (MBh)	Total Input (kW)[2]	Sensible Capacity (MBh) Return Dry Bulb (°F)						Total Capacity[1] (MBh)	Total Input (kW)[2]	Sensible Capacity (MBh) Return Dry Bulb (°F)					
CFM	WB (°F)			90	85	80	75	70	65			90	85	80	75	70	65
		75°F								85°F							
1500	77	91.7	4.2	43.9	38.2	32.4	-	-	-	88.0	4.7	40.2	34.9	29.5	-	-	-
	72	83.7	4.1	56.4	48.2	40.0	31.8	-	-	79.7	4.6	53.8	45.6	37.5	29.4	-	-
	67	75.6	4.1	68.9	58.2	47.6	39.7	31.9	-	71.4	4.6	67.3	56.4	45.5	37.4	29.4	-
	62	73.2	4.1	73.2	64.2	55.2	46.2	40.2	32.7	70.8	4.5	70.3	61.5	53.5	44.8	37.7	29.8
1800	77	93.1	4.2	52.0	42.2	32.4	-	-	-	88.4	4.7	50.1	40.2	30.3	-	-	-
	72	85.7	4.2	61.0	51.5	41.914	32.4	-	-	81.4	4.6	59.1	49.4	39.8	30.2	-	-
	67	78.4	4.1	70.1	60.7	51.4	42.0	32.7	-	74.3	4.6	68.0	58.7	49.4	39.8	30.3	-
	62	73.8	4.1	73.8	67.8	60.9	50.5	42.5	33.3	71.2	4.6	71.2	65.4	58.9	48.9	40.0	30.6
	57	60.7	4.1	60.7	60.7	60.7	60.7	52.4	43.4	59.4	4.6	59.4	59.4	59.4	59.1	49.8	40.4
2100	77	94.5	4.2	60.1	46.3	32.4	-	-	-	88.9	4.7	59.9	45.5	31.0	-	-	-
	72	87.8	4.2	65.7	54.8	43.8	32.9	-	-	83.1	4.6	64.3	53.2	42.1	31.0	-	-
	67	81.1	4.1	71.2	63.2	55.2	44.3	33.4	-	77.2	4.6	68.8	61.0	53.2	42.2	31.2	-
	62	74.4	4.1	74.4	71.4	66.6	54.9	44.8	34.0	71.6	4.6	71.6	69.2	64.3	52.9	42.4	31.4
	57	61.3	4.1	61.3	61.3	61.3	61.3	56.3	45.4	59.4	4.6	59.4	59.4	59.4	59.4	53.6	42.7
2400	77	95.9	4.3	68.2	50.3	32.5	-	-	-	89.4	4.7	69.7	50.8	31.8	-	-	-
	72	89.9	4.2	70.3	58.0	45.7	33.5	-	-	84.8	4.7	69.6	57.0	44.5	31.9	-	-
	67	83.8	4.2	72.4	65.7	59.0	46.6	34.2	-	80.2	4.6	69.5	63.3	57.1	44.6	32.0	-
	62	75.0	4.2	75.0	75.0	72.3	59.2	47.2	34.6	71.9	4.6	71.9	71.9	69.8	57.0	44.8	32.3
	57	61.9	4.1	61.9	61.9	61.9	61.9	60.2	47.5	59.4	4.6	59.4	59.4	59.4	59.4	57.5	45.1
2700	72	91.9	4.2	75.0	61.3	47.7	34.0	-	-	86.5	4.7	74.9	60.8	46.8	32.7	-	-
	67	86.5	4.2	73.6	68.2	62.8	48.9	34.9	-	83.1	4.6	70.2	65.6	61.0	46.9	32.9	-
	62	75.6	4.2	75.6	75.6	75.6	63.5	49.5	35.3	72.3	4.6	72.3	72.3	72.3	61.0	47.1	33.1
	57	62.5	4.2	62.5	62.5	62.5	62.5	62.5	49.6	59.4	4.6	59.4	59.4	59.4	59.4	59.4	47.4
3000	72	94.0	4.3	79.6	64.6	49.578	34.6	-	-	88.2	4.7	80.2	64.6	49.1	33.5	-	-
	67	89.2	4.2	74.8	70.7	66.6	51.2	35.7	-	86.0	4.7	71.0	67.9	64.8	49.3	33.7	-
	62	76.2	4.2	76.2	76.2	76.2	67.8	51.9	35.9	72.7	4.7	72.7	72.7	72.7	65.1	49.5	33.9
	57	63.1	4.2	63.1	63.1	63.1	63.1	63.1	51.6	59.4	4.6	59.4	59.4	59.4	59.4	59.4	49.7
		95°F								105°F							
1500	77	84.3	5.1	36.5	31.6	26.7	-	-	-	82.7	5.8	36.9	31.0	25.2	-	-	-
	72	75.7	5.1	51.2	43.1	35.0	26.9	-	-	71.6	5.8	49.9	41.6	33.4	25.1	-	-
	67	67.1	5.0	65.8	54.6	43.4	35.2	27.0	-	60.5	5.7	60.5	52.3	41.5	33.1	24.7	-
	62	68.3	5.0	66.1	58.9	51.7	43.4	35.2	26.9	64.6	5.7	62.5	56.1	49.7	41.1	32.6	24.0
1800	77	83.8	5.1	48.1	38.1	28.2	-	-	-	80.4	5.8	47.1	36.5	26.0	-	-	-
	72	77.0	5.1	57.1	47.4	37.728	28.1	-	-	72.1	5.8	55.1	45.3	35.6	25.9	-	-
	67	70.3	5.0	66.0	56.7	47.3	37.6	28.0	-	63.8	5.7	63.0	54.1	45.2	35.4	25.5	-
	62	68.5	5.0	68.5	62.9	56.9	47.2	37.5	27.9	64.7	5.7	64.7	60.0	54.9	44.9	35.0	25.0
	57	58.2	5.0	58.2	58.2	58.2	56.8	47.1	37.5	59.8	5.7	59.8	59.8	59.8	54.4	44.4	34.3
2100	77	83.3	5.1	59.7	44.7	29.6	-	-	-	78.1	5.8	57.3	42.0	26.7	-	-	-
	72	78.3	5.1	63.0	51.7	40.4	29.2	-	-	72.6	5.8	60.2	49.0	37.8	26.6	-	-
	67	73.4	5.1	66.3	58.8	51.2	40.1	28.9	-	67.1	5.8	63.0	56.0	48.9	37.6	26.4	-
	62	68.7	5.1	68.7	67.0	62.0	51.0	39.9	28.9	64.8	5.8	64.8	63.9	60.0	48.7	37.4	26.0
	57	57.5	5.0	57.5	57.5	57.5	57.5	51.0	40.0	58.1	5.8	58.1	58.1	58.1	58.1	47.7	36.0
2400	77	82.8	5.1	71.2	51.2	31.1	-	-	-	75.8	5.8	67.5	47.5	27.4	-	-	-
	72	79.7	5.1	68.9	56.0	43.2	30.3	-	-	73.1	5.8	65.3	52.7	40.0	27.4	-	-
	67	76.5	5.1	66.6	60.9	55.2	42.5	29.9	-	70.3	5.8	63.1	57.8	52.6	39.9	27.2	-
	62	68.9	5.1	68.9	68.9	67.2	54.8	42.3	29.9	64.9	5.8	64.9	64.9	64.9	52.5	39.8	27.0
	57	56.9	5.1	56.9	56.9	56.9	56.9	54.8	42.6	56.5	5.8	56.5	56.5	56.5	56.5	51.0	37.6
2700	72	81.0	5.1	74.8	60.3	45.9	31.4	-	-	73.5	5.8	70.4	56.3	42.2	28.1	-	-
	67	79.6	5.1	66.8	63.0	59.1	45.0	30.8	-	73.6	5.8	63.1	59.7	56.3	42.2	28.1	-
	62	69.1	5.1	69.1	69.1	69.1	58.6	44.7	30.9	64.9	5.8	64.9	64.9	64.9	56.3	42.2	28.1
	57	56.3	5.1	56.3	56.3	56.3	56.3	56.3	45.2	54.8	5.8	54.8	54.8	54.8	54.8	54.3	39.3
3000	72	82.3	5.1	80.7	64.7	48.591	32.5	-	-	74.0	5.8	74.0	60.0	44.4	28.9	-	-
	67	82.8	5.1	67.1	65.1	63.1	47.4	31.8	-	76.9	5.8	63.1	61.6	60.0	44.5	28.9	-
	62	69.3	5.1	69.3	69.3	69.3	62.3	47.1	32.0	65.0	5.8	65.0	65.0	65.0	60.1	44.6	29.1
	57	55.7	5.1	55.7	55.7	55.7	55.7	55.7	47.8	53.2	5.8	53.2	53.2	53.2	53.2	53.2	41.0

ZYA7 (6.0 Ton) (Continued)

Air on Evaporator Coil		Temperature of Air on Condenser Coil															
		Total Capacity[1] (MBh)	Total Input (kW)[2]	Sensible Capacity (MBh) Return Dry Bulb (°F)						Total Capacity[1] (MBh)	Total Input (kW)[2]	Sensible Capacity (MBh) Return Dry Bulb (°F)					
CFM	WB (°F)			90	85	80	75	70	65			90	85	80	75	70	65
		115°F								125°F							
1500	77	81.1	6.4	37.2	30.5	23.8	-	-	-	79.5	7.1	37.5	29.9	22.3	-	-	-
	72	67.5	6.4	48.7	40.2	31.7	23.3	-	-	63.4	7.1	47.4	38.8	30.1	21.4	-	-
	67	53.9	6.4	53.9	49.9	39.7	31.0	22.4	-	47.3	7.1	47.3	47.3	37.9	29.0	20.0	-
	62	60.8	6.4	58.9	53.3	47.7	38.8	30.0	21.1	57.1	7.2	55.3	50.5	45.6	36.5	27.4	18.2
1800	77	77.0	6.4	46.1	34.9	23.7	-	-	-	73.5	7.1	45.1	33.3	21.5	-	-	-
	72	67.1	6.4	53.0	43.2	33.4	23.7	-	-	62.2	7.1	51.0	41.2	31.3	21.4	-	-
	67	57.3	6.4	57.3	51.6	43.1	33.1	23.1	-	50.9	7.1	50.9	49.0	41.1	30.9	20.7	-
	62	60.8	6.5	60.8	57.0	52.8	42.6	32.4	22.1	57.0	7.2	57.0	54.1	50.8	40.3	29.8	19.3
	57	61.5	6.5	61.5	61.5	61.5	52.1	41.6	31.2	63.1	7.2	57.7	57.7	57.7	49.7	38.9	28.0
2100	77	72.8	6.4	55.0	39.3	23.7	-	-	-	67.6	7.1	52.6	36.7	20.8	-	-	-
	72	66.8	6.4	57.4	46.3	35.2	24.0	-	-	61.0	7.1	54.6	43.5	32.5	21.5	-	-
	67	60.8	6.4	59.8	53.2	46.6	35.2	23.9	-	54.4	7.1	54.4	50.4	44.2	32.8	21.3	-
	62	60.8	6.5	60.8	60.8	58.0	46.4	34.8	23.1	56.9	7.2	56.9	56.9	56.0	44.1	32.2	20.3
	57	58.7	6.5	58.7	58.7	58.7	56.9	44.4	31.9	59.3	7.2	59.3	59.3	59.3	54.4	41.1	27.8
2400	77	68.7	6.5	63.8	43.8	23.7	-	-	-	61.7	7.1	60.1	40.1	20.0	-	-	-
	72	66.5	6.5	61.7	49.3	36.9	24.4	-	-	59.8	7.1	58.1	45.9	33.7	21.5	-	-
	67	64.2	6.5	59.6	54.8	50.0	37.3	24.6	-	58.0	7.1	56.1	51.8	47.4	34.7	22.0	-
	62	60.8	6.5	60.8	60.8	60.8	50.2	37.2	24.2	56.8	7.2	56.8	56.8	56.8	47.9	34.6	21.3
	57	56.0	6.5	56.0	56.0	56.0	56.0	47.2	32.7	55.6	7.2	55.6	55.6	55.6	55.6	43.4	27.7
2700	72	66.1	6.5	66.1	52.3	38.6	24.8	-	-	58.7	7.1	58.7	48.3	34.9	21.6	-	-
	67	67.6	6.5	59.4	56.4	53.5	39.4	25.3	-	61.6	7.1	55.7	53.2	50.6	36.6	22.6	-
	62	60.8	6.5	60.8	60.8	60.8	54.0	39.6	25.2	56.7	7.2	56.7	56.7	56.7	51.7	37.0	22.3
	57	53.3	6.5	53.3	53.3	53.3	53.3	50.0	33.4	51.8	7.2	51.8	51.8	51.8	51.8	45.7	27.5
3000	72	65.8	6.5	65.8	55.3	40.3	25.2	-	-	57.5	7.1	57.5	50.7	36.1	21.6	-	-
	67	71.0	6.5	59.2	58.0	56.9	41.5	26.1	-	65.2	7.2	55.2	54.5	53.8	38.5	23.2	-
	62	60.8	6.5	60.8	60.8	60.8	57.8	42.0	26.2	56.6	7.2	56.6	56.6	56.6	55.5	39.4	23.3
	57	50.6	6.5	50.6	50.6	50.6	50.6	50.6	34.2	48.0	7.2	48.0	48.0	48.0	48.0	48.0	27.4

1. These capacities are gross ratings. For net capacity, deduct the supply air blower motor heat (MBh = 3.415 x kW). Refer to the appropriate Blower Performance Table for the kW of the supply air blower motor.
2. These ratings include the condenser fan motors (total 1 kW) and the compressor motors but not the supply air blower motor.

ZY08 (7.5 Ton)

Air on Evaporator Coil		Temperature of Air on Condenser Coil															
		Total Capacity[1] (MBh)	Total Input (kW)[2]	Sensible Capacity (MBh) Return Dry Bulb (°F)						Total Capacity[1] (MBh)	Total Input (kW)[2]	Sensible Capacity (MBh) Return Dry Bulb (°F)					
CFM	WB (°F)			90	85	80	75	70	65			90	85	80	75	70	65
		75°F								85°F							
1875	77	118.6	5.2	62.2	53.7	45.2	-	-	-	106.8	5.8	59.9	51.4	43.0	-	-	-
	72	107.7	5.2	73.3	63.4	53.6	43.8	-	-	102.0	5.8	70.6	61.0	51.3	41.6	-	-
	67	96.9	5.2	84.4	73.2	62.0	52.2	42.8	-	91.7	5.9	81.4	70.5	59.6	49.7	40.0	-
	62	93.3	5.2	92.3	81.4	70.4	59.4	51.7	42.4	89.5	5.9	88.6	78.2	67.8	57.1	48.1	38.2
2250	77	119.6	5.2	69.3	56.9	44.5	-	-	-	113.0	5.8	67.0	54.3	41.6	-	-	-
	72	110.3	5.2	79.7	67.8	55.9	43.9	-	-	104.4	5.9	77.0	65.0	53.1	41.2	-	-
	67	101.0	5.2	90.2	78.7	67.2	55.1	43.4	-	95.8	5.9	87.0	75.8	64.7	52.6	40.7	-
	62	98.1	5.2	96.9	87.7	78.5	65.3	54.8	43.0	94.0	5.9	92.9	84.6	76.2	63.4	52.0	39.9
	57	96.9	5.2	96.9	96.8	89.9	78.1	66.3	54.5	93.0	5.8	93.0	93.0	87.7	75.6	63.4	51.2
2625	77	120.7	5.2	76.4	60.1	43.8	-	-	-	113.7	5.8	74.1	57.1	40.2	-	-	-
	72	112.9	5.2	86.2	72.1	58.1	44.0	-	-	106.7	5.9	83.3	69.1	55.0	40.8	-	-
	67	105.2	5.3	96.0	84.2	72.3	58.0	44.0	-	99.8	5.9	92.5	81.1	69.8	55.5	41.3	-
	62	103.0	5.2	101.5	94.1	86.6	71.3	57.9	43.6	98.4	5.9	97.3	90.9	84.6	69.8	55.9	41.6
	57	102.0	5.2	102.0	101.9	98.5	86.4	71.9	57.4	97.6	5.8	97.6	97.6	97.6	85.0	70.6	56.2
3000	77	121.7	5.2	83.5	63.3	43.1	-	-	-	114.4	5.9	81.2	59.9	38.7	-	-	-
	72	115.5	5.2	92.6	76.5	60.3	44.1	-	-	109.1	5.9	89.6	73.2	56.8	40.4	-	-
	67	109.3	5.3	101.8	89.6	77.5	60.9	44.5	-	103.8	5.9	98.1	86.5	74.9	58.3	41.9	-
	62	107.8	5.2	106.1	100.4	94.7	77.2	61.0	44.2	102.9	5.9	101.6	97.3	93.0	76.1	59.9	43.3
	57	107.0	5.2	107.0	107.0	107.0	94.7	77.6	60.4	102.3	5.8	102.3	102.3	102.3	94.4	77.8	61.2
3375	72	118.1	5.3	99.1	80.8	62.5	44.3	-	-	111.5	5.9	96.0	77.3	58.6	40.0	-	-
	67	113.5	5.3	107.6	95.1	82.7	63.8	45.1	-	107.9	5.9	103.6	91.8	80.0	61.2	42.6	-
	62	112.6	5.2	110.7	106.7	102.8	83.1	64.1	44.8	107.3	5.9	106.0	103.6	101.3	82.4	63.8	45.0
	57	112.1	5.2	112.1	112.1	112.1	103.1	83.2	63.4	106.9	5.8	106.9	106.9	106.9	103.9	85.0	66.2
3750	72	120.7	5.3	105.6	85.2	64.8	44.4	-	-	113.9	5.9	102.3	81.4	60.5	39.6	-	-
	67	117.6	5.3	113.4	100.6	87.8	66.7	45.6	-	111.9	5.9	109.2	97.1	85.1	64.1	43.2	-
	62	117.4	5.2	115.3	113.1	110.9	89.0	67.2	45.4	111.7	5.9	110.3	110.0	109.7	88.7	67.7	46.7
	57	117.2	5.2	117.1	117.1	117.1	111.4	88.9	66.3	111.6	5.8	111.4	111.4	111.4	111.4	92.3	71.2
		95°F								105°F							
1875	77	95.0	6.3	57.5	49.2	40.9	-	-	-	89.4	7.4	54.8	46.1	37.5	-	-	-
	72	96.2	6.5	68.0	58.5	49.0	39.5	-	-	89.1	7.5	65.4	55.7	46.0	36.3	-	-
	67	86.6	6.7	78.5	67.8	57.1	47.1	37.2	-	81.6	7.6	76.0	65.3	54.5	44.4	34.4	-
	62	85.7	6.5	84.8	75.0	65.2	54.8	44.4	34.0	81.0	7.5	80.2	71.6	63.0	52.6	42.2	31.7
2250	77	106.3	6.4	64.6	51.6	38.7	-	-	-	97.8	7.4	62.0	48.9	35.8	-	-	-
	72	98.4	6.5	74.2	62.3	50.4	38.5	-	-	91.6	7.5	71.3	59.4	47.6	35.7	-	-
	67	90.5	6.6	83.8	73.0	62.1	50.0	37.9	-	85.3	7.6	80.6	69.9	59.3	47.1	35.0	-
	62	89.8	6.5	88.9	81.4	73.9	61.5	49.2	36.8	84.8	7.5	84.1	77.5	71.0	58.6	46.2	33.8
	57	89.1	6.4	89.1	89.1	85.6	73.0	60.5	47.9	84.2	7.4	84.2	84.2	82.7	70.0	57.4	44.8
2625	77	106.7	6.4	71.7	54.1	36.5	-	-	-	99.0	7.4	69.2	51.7	34.2	-	-	-
	72	100.6	6.5	80.4	66.1	51.8	37.6	-	-	94.0	7.5	77.2	63.2	49.1	35.1	-	-
	67	94.4	6.6	89.1	78.1	67.2	52.9	38.6	-	89.0	7.6	85.2	74.6	64.0	49.8	35.6	-
	62	93.9	6.5	93.0	87.8	82.5	68.2	53.9	39.6	88.6	7.5	87.9	83.4	78.9	64.6	50.2	35.9
	57	93.3	6.4	93.3	93.3	93.3	83.6	69.3	55.0	88.1	7.4	88.1	88.1	88.1	79.3	64.9	50.4
3000	77	107.1	6.5	78.8	56.6	34.3	-	-	-	100.1	7.5	76.4	54.5	32.6	-	-	-
	72	102.8	6.5	86.6	69.9	53.3	36.6	-	-	96.4	7.5	83.1	66.9	50.7	34.5	-	-
	67	98.4	6.6	94.4	83.3	72.2	55.8	39.3	-	92.7	7.5	89.8	79.3	68.8	52.5	36.3	-
	62	97.9	6.5	97.1	94.2	91.2	75.0	58.7	42.5	92.3	7.5	91.7	89.3	86.8	70.6	54.3	38.0
	57	97.5	6.4	97.5	97.5	97.5	94.1	78.1	62.0	92.0	7.4	92.0	92.0	92.0	88.6	72.3	56.0
3375	72	104.9	6.5	92.8	73.8	54.7	35.7	-	-	98.8	7.5	89.1	70.7	52.3	33.9	-	-
	67	102.3	6.5	99.7	88.5	77.3	58.7	40.1	-	96.3	7.5	94.5	84.0	73.5	55.2	36.9	-
	62	102.0	6.5	101.2	100.6	99.9	81.7	63.5	45.3	96.1	7.5	95.5	95.1	94.8	76.6	58.3	40.1
	57	101.7	6.4	101.7	101.7	101.7	101.7	86.9	69.1	95.9	7.4	95.9	95.9	95.9	95.9	79.8	61.6
3750	72	107.1	6.6	99.0	77.6	56.2	34.7	-	-	101.2	7.5	95.0	74.4	53.8	33.3	-	-
	67	106.3	6.5	105.0	93.7	82.3	61.6	40.8	-	100.0	7.5	99.1	88.7	78.3	57.9	37.6	-
	62	106.1	6.5	105.3	105.3	105.3	88.4	68.2	48.1	99.9	7.5	99.3	99.3	99.3	82.5	62.4	42.2
	57	105.9	6.5	105.7	105.7	105.7	105.7	95.7	76.2	99.8	7.4	99.6	99.6	99.6	99.6	87.2	67.2

ZY08 (7.5 Ton) (Continued)

Air on Evaporator Coil		Temperature of Air on Condenser Coil															
		Total Capacity[1] (MBh)	Total Input (kW)[2]	Sensible Capacity (MBh) Return Dry Bulb (°F)						Total Capacity[1] (MBh)	Total Input (kW)[2]	Sensible Capacity (MBh) Return Dry Bulb (°F)					
CFM	WB (°F)			90	85	80	75	70	65			90	85	80	75	70	65
		115°F								125°F							
1875	77	83.8	8.5	52.1	43.1	34.1	-	-	-	78.3	9.5	49.4	40.0	30.7	-	-	-
	72	82.1	8.5	62.8	52.9	43.0	33.1	-	-	75.0	9.5	60.2	50.1	40.0	29.9	-	-
	67	76.7	8.6	73.5	62.7	51.9	41.7	31.5	-	71.7	9.5	71.1	60.2	49.3	39.0	28.7	-
	62	76.2	8.5	75.7	68.3	60.9	50.4	39.9	29.4	71.5	9.5	71.1	64.9	58.7	48.1	37.6	27.1
2250	77	89.3	8.5	59.4	46.2	33.0	-	-	-	80.9	9.5	56.8	43.5	30.2	-	-	-
	72	84.7	8.5	68.4	56.6	44.7	32.8	-	-	77.9	9.5	65.6	53.7	41.8	30.0	-	-
	67	80.1	8.5	77.5	66.9	56.4	44.2	32.1	-	74.9	9.5	74.3	63.9	53.5	41.3	29.2	-
	62	79.7	8.5	79.2	73.6	68.1	55.6	43.2	30.8	74.7	9.5	74.3	69.7	65.2	52.7	40.2	27.8
	57	79.4	8.5	79.4	79.4	79.4	67.0	54.3	41.7	74.5	9.5	74.4	74.4	74.4	64.0	51.3	38.5
2625	77	91.2	8.5	66.7	49.4	32.0	-	-	-	83.4	9.5	64.2	47.0	29.7	-	-	-
	72	87.4	8.5	74.1	60.2	46.4	32.6	-	-	80.8	9.5	70.9	57.3	43.7	30.1	-	-
	67	83.5	8.5	81.4	71.1	60.8	46.7	32.7	-	78.1	9.4	77.5	67.6	57.7	43.7	29.7	-
	62	83.2	8.5	82.7	79.0	75.3	60.9	46.6	32.2	77.9	9.5	77.6	74.6	71.6	57.2	42.9	28.5
	57	82.9	8.4	82.9	82.9	82.9	75.1	60.4	45.8	77.7	9.5	77.6	77.6	77.6	70.8	56.0	41.3
3000	77	93.1	8.5	74.0	52.5	30.9	-	-	-	86.0	9.5	71.6	50.4	29.2	-	-	-
	72	90.0	8.5	79.7	63.9	48.1	32.3	-	-	83.6	9.4	76.2	60.9	45.5	30.2	-	-
	67	86.9	8.5	85.3	75.3	65.3	49.3	33.2	-	81.2	9.4	80.8	71.3	61.8	46.0	30.2	-
	62	86.7	8.5	86.3	84.4	82.5	66.2	49.9	33.6	81.1	9.4	80.8	79.5	78.1	61.8	45.5	29.2
	57	86.5	8.4	86.5	86.5	86.5	83.1	66.5	50.0	81.0	9.4	80.9	80.9	80.9	77.6	60.8	44.0
3375	72	92.7	8.5	85.3	67.6	49.8	32.1	-	-	86.5	9.4	81.5	64.5	47.4	30.3	-	-
	67	90.4	8.4	89.2	79.5	69.7	51.8	33.8	-	84.4	9.4	84.0	75.0	66.0	48.3	30.6	-
	62	90.2	8.4	89.8	89.7	89.7	71.4	53.2	35.0	84.3	9.4	84.1	84.1	84.1	66.3	48.1	29.8
	57	90.0	8.4	90.0	90.0	90.0	90.0	72.6	54.2	84.2	9.4	84.1	84.1	84.1	84.1	65.5	46.7
3750	72	95.3	8.5	90.9	71.2	51.5	31.8	-	-	89.4	9.4	86.9	68.0	49.2	30.4	-	-
	67	93.8	8.4	93.2	83.7	74.2	54.3	34.3	-	87.6	9.3	87.3	78.7	70.1	50.6	31.1	-
	62	93.7	8.4	93.3	93.3	93.3	76.7	56.5	36.4	87.5	9.4	87.3	87.3	87.3	70.9	50.7	30.5
	57	93.6	8.4	93.5	93.5	93.5	93.5	78.7	58.3	87.4	9.4	87.4	87.4	87.4	87.4	70.3	49.4

1. These capacities are gross ratings. For net capacity, deduct the supply air blower motor heat (MBh = 3.415 x kW). Refer to the appropriate Blower Performance Table for the kW of the supply air blower motor.
2. These ratings include the condenser fan motors (total 1 kW) and the compressor motors but not the supply air blower motor.

ZY09 (8.5 Ton)

Air on Evaporator Coil		Temperature of Air on Condenser Coil															
		Total Capacity[1] (MBh)	Total Input (kW)[2]	Sensible Capacity (MBh) Return Dry Bulb (°F)						Total Capacity[1] (MBh)	Total Input (kW)[2]	Sensible Capacity (MBh) Return Dry Bulb (°F)					
CFM	WB (°F)			90	85	80	75	70	65			90	85	80	75	70	65
		75°F								85°F							
2125	77	129.6	5.9	67.0	57.1	47.1	-	-	-	123.8	6.5	64.6	54.4	44.2	-	-	-
	72	121.7	5.8	83.1	71.2	59.2	47.2	-	-	116.0	6.5	80.7	68.5	56.3	44.1	-	-
	67	113.7	5.8	99.3	85.3	71.2	58.7	46.8	-	108.2	6.5	96.7	82.6	68.4	56.0	43.9	-
	62	112.3	5.7	107.4	95.3	83.3	67.6	58.5	46.0	106.3	6.5	102.3	91.4	80.6	66.6	55.9	43.6
2550	77	132.2	5.9	75.2	60.8	46.4	-	-	-	125.7	6.6	73.3	58.6	43.9	-	-	-
	72	124.6	5.9	90.1	75.9	61.6	47.3	-	-	118.6	6.5	87.7	73.3	58.9	44.6	-	-
	67	117.1	5.8	105.1	90.9	76.8	61.9	47.6	-	111.5	6.5	102.0	88.0	74.0	59.3	44.8	-
	62	115.5	5.8	111.5	101.8	92.1	74.4	62.1	47.1	109.8	6.5	106.5	97.8	89.1	72.9	59.4	44.5
	57	113.9	5.7	113.9	110.6	107.3	91.9	76.5	61.2	108.0	6.4	108.0	106.1	104.2	89.0	73.9	58.8
2975	77	134.7	6.0	83.4	64.5	45.6	-	-	-	127.6	6.6	82.0	62.8	43.6	-	-	-
	72	127.6	5.9	97.1	80.6	64.0	47.5	-	-	121.3	6.6	94.6	78.1	61.6	45.1	-	-
	67	120.5	5.8	110.8	96.6	82.4	65.2	48.3	-	114.9	6.5	107.2	93.4	79.6	62.5	45.7	-
	62	118.7	5.8	115.7	108.3	100.8	81.3	65.7	48.1	113.2	6.5	110.6	104.1	97.6	79.2	62.8	45.3
	57	117.5	5.8	117.5	115.8	114.2	101.1	83.0	64.9	111.8	6.5	111.8	111.8	111.8	97.7	79.9	62.0
3400	77	137.3	6.0	91.5	68.2	44.8	-	-	-	129.5	6.6	90.7	67.0	43.3	-	-	-
	72	130.6	5.9	104.1	85.2	66.4	47.6	-	-	123.9	6.6	101.6	82.9	64.2	45.6	-	-
	67	123.9	5.8	116.6	102.3	88.0	68.4	49.0	-	118.3	6.6	112.4	98.8	85.2	65.8	46.5	-
	62	121.9	5.8	119.9	114.7	109.6	88.1	69.3	49.1	116.7	6.5	114.8	110.4	106.1	85.5	66.2	46.2
	57	121.1	5.8	121.1	121.1	121.1	110.3	89.5	68.7	115.7	6.5	115.6	115.6	115.6	106.4	85.8	65.2
3825	72	133.6	6.0	111.0	89.9	68.8	47.7	-	-	126.5	6.6	108.5	87.7	66.9	46.1	-	-
	67	127.3	5.9	122.4	108.0	93.6	71.6	49.7	-	121.6	6.6	117.6	104.2	90.7	69.0	47.4	-
	62	125.1	5.9	124.1	121.2	118.3	94.9	72.8	50.1	120.1	6.6	118.9	116.8	114.6	91.7	69.6	47.1
	57	124.6	5.9	124.6	124.6	124.6	119.5	96.0	72.4	119.5	6.5	119.5	119.5	119.5	115.1	91.7	68.4
4250	72	136.6	6.0	118.0	94.6	71.2	47.8	-	-	129.2	6.6	115.5	92.5	69.5	46.5	-	-
	67	130.7	5.9	128.2	113.6	99.1	74.8	50.4	-	125.0	6.6	122.8	109.6	96.3	72.3	48.3	-
	62	128.2	5.9	128.2	127.6	127.0	101.7	76.4	51.1	123.5	6.6	123.1	123.1	123.1	98.0	73.0	47.9
	57	128.2	5.9	128.2	128.2	128.2	128.2	102.4	76.2	123.3	6.6	123.3	123.3	123.3	123.3	97.7	71.6
		95°F								105°F							
2125	77	118.0	7.2	62.3	51.7	41.2	-	-	-	110.3	8.4	62.5	50.8	39.2	-	-	-
	72	110.3	7.2	78.2	65.8	53.4	41.0	-	-	103.8	8.4	76.1	63.6	51.0	38.4	-	-
	67	102.6	7.3	94.2	79.9	65.6	53.3	41.0	-	97.2	8.4	89.8	76.3	62.8	50.4	38.0	-
	62	100.4	7.2	97.3	87.6	77.9	65.7	53.4	41.2	94.8	8.3	91.9	83.2	74.6	62.4	50.3	38.1
2550	77	119.2	7.2	71.5	56.4	41.4	-	-	-	111.4	8.4	70.7	54.7	38.6	-	-	-
	72	112.6	7.2	85.2	70.7	56.3	41.8	-	-	105.7	8.4	82.3	67.8	53.4	38.9	-	-
	67	106.0	7.3	98.9	85.0	71.2	56.6	42.0	-	100.1	8.4	93.9	81.0	68.1	53.5	38.9	-
	62	104.1	7.2	101.4	93.8	86.1	71.4	56.7	41.9	98.1	8.3	95.7	89.3	82.9	68.1	53.4	38.6
	57	102.2	7.2	102.0	101.5	101.0	86.2	71.3	56.4	96.1	8.3	96.1	96.1	96.1	82.7	67.8	53.0
2975	77	120.5	7.2	80.7	61.1	41.6	-	-	-	112.5	8.4	78.9	58.5	38.1	-	-	-
	72	114.9	7.3	92.1	75.6	59.2	42.7	-	-	107.7	8.4	88.5	72.1	55.8	39.5	-	-
	67	109.3	7.3	103.5	90.2	76.8	59.9	43.0	-	102.9	8.4	98.0	85.7	73.5	56.7	39.8	-
	62	107.8	7.2	105.5	99.9	94.4	77.1	59.9	42.6	101.4	8.3	99.4	95.3	91.2	73.8	56.5	39.2
	57	106.2	7.2	106.1	106.1	106.1	94.3	76.7	59.1	99.8	8.3	99.8	99.8	99.8	91.0	73.2	55.4
3400	77	121.8	7.3	89.9	65.8	41.8	-	-	-	113.6	8.4	87.2	62.4	37.6	-	-	-
	72	117.2	7.3	99.1	80.6	62.1	43.5	-	-	109.7	8.4	94.6	76.4	58.2	40.0	-	-
	67	112.6	7.3	108.2	95.3	82.3	63.2	44.1	-	105.8	8.4	102.1	90.5	78.8	59.8	40.7	-
	62	111.4	7.2	109.7	106.1	102.6	82.8	63.1	43.3	104.6	8.4	103.1	101.3	99.5	79.6	59.7	39.7
	57	110.3	7.2	110.2	110.2	110.2	102.5	82.1	61.7	103.5	8.3	103.5	103.5	103.5	99.3	78.6	57.8
3825	72	119.5	7.3	106.0	85.5	64.9	44.4	-	-	111.6	8.4	100.8	80.7	60.6	40.6	-	-
	67	116.0	7.3	112.9	100.4	87.9	66.5	45.1	-	108.6	8.4	106.2	95.2	84.2	62.9	41.6	-
	62	115.1	7.3	113.8	112.3	110.8	88.6	66.3	44.0	107.9	8.4	106.8	106.8	106.8	85.3	62.8	40.3
	57	114.3	7.2	114.3	114.3	114.3	110.7	87.5	64.4	107.2	8.3	107.2	107.2	107.2	107.2	83.9	60.2
4250	72	121.8	7.3	112.9	90.4	67.8	45.3	-	-	113.6	8.4	107.0	85.0	63.1	41.1	-	-
	67	119.3	7.3	117.5	105.5	93.5	69.8	46.1	-	111.5	8.4	110.3	99.9	89.6	66.1	42.6	-
	62	118.8	7.3	117.9	117.9	117.9	94.3	69.5	44.7	111.2	8.4	110.6	110.6	110.6	91.0	65.9	40.8
	57	118.4	7.2	118.4	118.4	118.4	118.4	92.9	67.0	110.8	8.3	110.8	110.8	110.8	110.8	89.3	62.6

ZY09 (8.5 Ton) (Continued)

Air on Evaporator Coil		Temperature of Air on Condenser Coil															
		Total Capacity[1] (MBh)	Total Input (kW)[2]	Sensible Capacity (MBh) Return Dry Bulb (°F)						Total Capacity[1] (MBh)	Total Input (kW)[2]	Sensible Capacity (MBh) Return Dry Bulb (°F)					
CFM	WB (°F)			90	85	80	75	70	65			90	85	80	75	70	65
		115°F								125°F							
2125	77	102.7	9.5	62.7	49.9	37.1	-	-	-	95.1	10.7	62.9	49.0	35.1	-	-	-
	72	97.3	9.5	74.1	61.3	48.5	35.7	-	-	90.7	10.6	72.0	59.0	46.1	33.1	-	-
	67	91.8	9.5	85.4	72.7	59.9	47.5	35.0	-	86.4	10.6	81.0	69.0	57.0	44.5	32.0	-
	62	89.3	9.4	86.6	78.9	71.3	59.2	47.1	35.0	83.7	10.6	81.3	74.6	67.9	55.9	43.9	31.9
2550	77	103.6	9.5	69.9	52.9	35.9	-	-	-	95.8	10.7	69.1	51.2	33.2	-	-	-
	72	98.9	9.5	79.4	65.0	50.5	36.0	-	-	92.0	10.6	76.6	62.1	47.6	33.1	-	-
	67	94.1	9.5	89.0	77.0	65.0	50.4	35.8	-	88.2	10.6	84.0	73.0	62.0	47.3	32.7	-
	62	92.1	9.4	89.9	84.8	79.6	64.9	50.1	35.4	86.2	10.6	84.2	80.3	76.4	61.6	46.9	32.1
	57	90.1	9.4	90.1	90.1	90.1	79.3	64.4	49.5	84.1	10.5	84.1	84.1	84.1	75.9	61.0	46.1
2975	77	104.5	9.5	77.2	55.9	34.7	-	-	-	96.5	10.6	75.4	53.3	31.2	-	-	-
	72	100.5	9.5	84.8	68.6	52.4	36.2	-	-	93.3	10.6	81.2	65.1	49.1	33.0	-	-
	67	96.5	9.5	92.5	81.3	70.2	53.4	36.6	-	90.1	10.6	87.0	76.9	66.9	50.2	33.4	-
	62	95.0	9.5	93.2	90.6	88.0	70.6	53.2	35.8	88.6	10.6	87.1	85.9	84.8	67.3	49.8	32.3
	57	93.4	9.4	93.4	93.4	93.4	87.7	69.7	51.7	87.0	10.5	87.0	87.0	87.0	84.4	66.2	48.0
3400	77	105.4	9.5	84.4	58.9	33.4	-	-	-	97.1	10.6	81.7	55.5	29.3	-	-	-
	72	102.1	9.5	90.2	72.3	54.4	36.5	-	-	94.6	10.6	85.8	68.2	50.6	33.0	-	-
	67	98.9	9.5	96.0	85.7	75.4	56.4	37.4	-	92.0	10.6	89.9	80.9	71.9	53.0	34.1	-
	62	97.8	9.5	96.5	96.4	96.3	76.3	56.2	36.2	91.0	10.6	90.0	90.0	90.0	73.0	52.8	32.6
	57	96.7	9.4	96.7	96.7	96.7	96.2	75.0	53.9	89.9	10.5	89.9	89.9	89.9	89.9	71.5	50.0
3825	72	103.8	9.5	95.6	76.0	56.4	36.8	-	-	95.9	10.6	90.4	71.2	52.1	32.9	-	-
	67	101.3	9.5	99.5	90.0	80.5	59.4	38.2	-	93.9	10.6	92.9	84.8	76.8	55.8	34.8	-
	62	100.6	9.5	99.9	99.9	99.9	82.0	59.3	36.6	93.4	10.6	92.9	92.9	92.9	78.7	55.7	32.8
	57	100.0	9.4	100.0	100.0	100.0	100.0	80.3	56.1	92.9	10.5	92.9	92.9	92.9	92.9	76.7	51.9
4250	72	105.4	9.5	101.0	79.7	58.3	37.0	-	-	97.2	10.6	95.0	74.3	53.6	32.9	-	-
	67	103.6	9.5	103.0	94.4	85.7	62.3	39.0	-	95.8	10.6	95.8	88.8	81.8	58.6	35.4	-
	62	103.5	9.5	103.2	103.2	103.2	87.7	62.3	36.9	95.8	10.6	95.8	95.8	95.8	84.4	58.7	33.0
	57	103.3	9.4	103.3	103.3	103.3	103.3	85.6	58.2	95.8	10.5	95.8	95.8	95.8	95.8	82.0	53.8

1. These capacities are gross ratings. For net capacity, deduct the supply air blower motor heat (MBh = 3.415 x kW). Refer to the appropriate Blower Performance Table for the kW of the supply air blower motor.
2. These ratings include the condenser fan motors (total 1 kW) and the compressor motors but not the supply air blower motor.

ZY12 (10 Ton)

Air on Evaporator Coil		Temperature of Air on Condenser Coil															
		Total Capacity[1] (MBh)	Total Input (kW)[2]	Sensible Capacity (MBh) Return Dry Bulb (°F)						Total Capacity[1] (MBh)	Total Input (kW)[2]	Sensible Capacity (MBh) Return Dry Bulb (°F)					
CFM	WB (°F)			90	85	80	75	70	65			90	85	80	75	70	65
		75°F								85°F							
2500	77	157.6	7.2	79.1	66.6	54.2	-	-	-	150.9	8.0	75.7	63.7	51.8	-	-	-
	72	143.9	7.1	94.6	81.1	67.6	54.1	-	-	137.3	8.0	91.8	78.3	64.8	51.4	-	-
	67	130.2	7.0	110.1	95.6	81.0	66.8	53.8	-	123.7	7.9	107.8	92.9	77.9	64.1	51.0	-
	62	123.5	7.0	120.7	107.6	94.4	77.4	67.0	53.4	119.2	7.9	116.4	103.7	91.0	75.9	64.1	50.6
3000	77	159.0	7.2	88.0	71.1	54.1	-	-	-	151.5	8.0	85.2	68.3	51.4	-	-	-
	72	146.8	7.1	103.1	86.9	70.8	54.7	-	-	139.9	8.0	100.1	84.0	67.9	51.8	-	-
	67	134.7	7.0	118.1	102.8	87.5	70.7	54.9	-	128.3	7.9	114.9	99.6	84.4	67.9	52.0	-
	62	129.2	7.0	126.6	115.4	104.1	85.0	71.2	54.7	124.4	7.9	121.8	111.3	100.8	83.2	68.2	51.8
	57	126.6	7.0	126.6	123.7	120.8	104.1	87.5	70.8	122.1	7.9	122.1	119.7	117.3	100.8	84.4	67.9
3500	77	160.3	7.2	96.9	75.5	54.1	-	-	-	152.2	8.0	94.8	72.9	51.1	-	-	-
	72	149.7	7.1	111.5	92.8	74.0	55.3	-	-	142.5	8.0	108.4	89.7	71.0	52.3	-	-
	67	139.1	7.1	126.1	110.0	94.0	74.6	55.9	-	132.9	8.0	122.0	106.4	90.8	71.7	52.9	-
	62	134.9	7.0	132.4	123.2	113.9	92.6	75.3	56.0	129.7	7.9	127.3	119.0	110.7	90.5	72.3	53.1
	57	132.8	7.0	132.5	131.4	129.9	114.2	94.7	75.1	127.7	7.9	127.6	127.6	127.6	111.1	91.6	72.2
4000	77	161.6	7.2	105.9	80.0	54.1	-	-	-	152.9	8.1	104.3	77.6	50.8	-	-	-
	72	152.6	7.2	120.0	98.6	77.3	55.9	-	-	145.2	8.0	116.7	95.4	74.0	52.7	-	-
	67	143.6	7.1	134.1	117.2	100.4	78.5	57.0	-	137.5	8.0	129.1	113.2	97.3	75.5	53.9	-
	62	140.6	7.1	138.3	130.9	123.6	100.2	79.4	57.3	135.0	7.9	132.7	126.6	120.5	97.8	76.4	54.3
	57	139.0	7.0	138.3	138.3	138.3	124.3	101.8	79.4	133.3	7.9	133.1	133.1	133.1	121.3	98.9	76.4
4500	72	155.5	7.2	128.4	104.4	80.5	56.5	-	-	147.8	8.0	125.0	101.1	77.1	53.2	-	-
	67	148.0	7.1	142.0	124.5	106.9	82.4	58.1	-	142.0	8.0	136.2	120.0	103.7	79.2	54.9	-
	62	146.2	7.1	144.1	138.7	133.3	107.8	83.5	58.6	140.3	8.0	138.2	134.3	130.4	105.1	80.5	55.6
	57	145.2	7.1	144.2	144.2	144.2	134.4	109.0	83.7	138.9	7.9	138.6	138.6	138.6	131.6	106.1	80.7
5000	72	158.4	7.2	136.8	110.3	83.7	57.2	-	-	150.4	8.0	133.3	106.8	80.2	53.6	-	-
	67	152.4	7.1	150.0	131.7	113.4	86.3	59.1	-	146.6	8.0	143.2	126.7	110.2	83.0	55.8	-
	62	151.9	7.1	150.0	146.5	143.0	115.4	87.7	60.0	145.6	8.0	143.6	141.9	140.2	112.4	84.6	56.8
	57	151.4	7.1	150.0	150.0	150.0	144.4	116.2	87.9	144.5	8.0	144.0	144.0	144.0	141.8	113.4	85.0
		95°F								105°F							
2500	77	144.1	8.8	72.2	60.8	49.4	-	-	-	134.0	10.1	69.8	57.7	45.6	-	-	-
	72	130.6	8.8	88.9	75.5	62.1	48.7	-	-	121.8	10.1	85.6	72.0	58.3	44.6	-	-
	67	117.1	8.8	105.5	90.2	74.8	61.5	48.2	-	110.0	10.1	101.5	86.2	70.9	57.7	44.5	-
	62	114.8	8.8	112.0	99.8	87.5	74.3	61.1	47.8	108.5	10.1	105.9	94.8	83.6	70.8	58.0	45.3
3000	77	144.1	8.9	82.4	65.6	48.8	-	-	-	133.8	10.1	79.8	62.3	44.8	-	-	-
	72	133.0	8.9	97.1	81.0	65.0	49.0	-	-	124.2	10.1	93.4	77.2	61.0	44.9	-	-
	67	121.8	8.8	111.7	96.5	81.3	65.2	49.1	-	114.5	10.1	107.0	92.1	77.3	61.3	45.3	-
	62	119.7	8.8	117.1	107.3	97.5	81.3	65.2	49.0	113.1	10.1	110.6	102.1	93.5	77.7	61.8	46.0
	57	117.6	8.8	117.6	115.7	113.7	97.5	81.3	65.0	111.6	10.1	111.1	110.4	109.7	94.0	78.4	62.8
3500	77	144.1	8.9	92.6	70.4	48.1	-	-	-	133.7	10.1	89.9	67.0	44.1	-	-	-
	72	135.3	8.9	105.2	86.6	67.9	49.3	-	-	126.5	10.1	101.2	82.5	63.8	45.2	-	-
	67	126.6	8.8	117.9	102.8	87.7	68.8	49.9	-	119.0	10.1	112.5	98.0	83.6	64.8	46.1	-
	62	124.6	8.8	122.1	114.8	107.5	88.4	69.3	50.2	117.7	10.1	115.4	109.3	103.3	84.5	65.7	46.8
	57	122.6	8.8	122.6	122.6	122.6	107.9	88.6	69.3	116.3	10.1	115.8	115.8	115.8	104.1	85.2	66.3
4000	77	144.1	8.9	102.7	75.1	47.5	-	-	-	133.5	10.1	99.9	71.6	43.3	-	-	-
	72	137.7	8.9	113.4	92.1	70.8	49.5	-	-	128.9	10.1	109.0	87.8	66.6	45.4	-	-
	67	131.3	8.8	124.1	109.1	94.1	72.5	50.8	-	123.5	10.1	118.0	104.0	89.9	68.4	46.9	-
	62	129.5	8.8	127.2	122.3	117.4	95.4	73.4	51.3	122.2	10.1	120.1	116.6	113.2	91.3	69.5	47.6
	57	127.6	8.8	127.6	127.6	127.6	118.3	95.9	73.5	121.0	10.0	120.6	120.6	120.6	114.2	92.1	69.9
4500	72	140.1	8.9	121.6	97.7	73.7	49.8	-	-	131.3	10.1	116.7	93.1	69.4	45.7	-	-
	67	136.1	8.9	130.3	115.4	100.6	76.1	51.7	-	128.0	10.1	123.5	109.9	96.2	71.9	47.7	-
	62	134.4	8.8	132.2	129.8	127.4	102.4	77.5	52.5	126.8	10.0	124.9	123.9	123.0	98.1	73.3	48.4
	57	132.6	8.8	132.6	132.6	132.6	128.7	103.2	77.8	125.6	10.0	125.4	125.4	125.4	124.3	98.9	73.4
5000	72	142.5	8.9	129.8	103.2	76.7	50.1	-	-	133.7	10.1	124.5	98.4	72.2	46.0	-	-
	67	140.9	8.9	136.5	121.8	107.0	79.8	52.6	-	132.5	10.1	129.0	115.8	102.5	75.5	48.5	-
	62	139.2	8.8	137.3	137.3	137.3	109.5	81.6	53.7	131.4	10.0	129.6	129.6	129.6	105.0	77.1	49.2
	57	137.6	8.8	137.6	137.6	137.6	137.6	110.6	82.0	130.3	10.0	130.1	130.1	130.1	130.1	105.7	76.9

ZY12 (10 Ton) (Continued)

Air on Evaporator Coil		Temperature of Air on Condenser Coil															
		Total Capacity[1] (MBh)	Total Input (kW)[2]	Sensible Capacity (MBh) Return Dry Bulb (°F)						Total Capacity[1] (MBh)	Total Input (kW)[2]	Sensible Capacity (MBh) Return Dry Bulb (°F)					
CFM	WB (°F)			90	85	80	75	70	65			90	85	80	75	70	65
		115°F								125°F							
2500	77	123.9	11.4	67.3	54.6	41.8	-	-	-	113.8	12.7	64.8	51.4	38.0	-	-	-
	72	113.0	11.4	82.4	68.4	54.4	40.5	-	-	104.2	12.6	79.2	64.9	50.6	36.3	-	-
	67	102.9	11.3	97.5	82.3	67.1	53.9	40.7	-	95.8	12.6	93.5	78.3	63.2	50.1	37.0	-
	62	102.2	11.4	99.8	89.7	79.7	67.3	55.0	42.7	95.8	12.7	93.7	84.7	75.7	63.9	52.0	40.1
3000	77	123.6	11.4	77.2	59.1	40.9	-	-	-	113.3	12.7	74.6	55.8	37.0	-	-	-
	72	115.4	11.4	89.8	73.4	57.1	40.8	-	-	106.6	12.6	86.1	69.6	53.1	36.6	-	-
	67	107.2	11.3	102.3	87.8	73.3	57.4	41.5	-	99.9	12.6	97.6	83.4	69.3	53.5	37.7	-
	62	106.4	11.3	104.2	96.8	89.4	74.0	58.5	43.1	99.8	12.6	97.8	91.6	85.4	70.3	55.2	40.1
	57	105.7	11.4	104.5	104.5	104.5	90.6	75.6	60.6	99.8	12.7	98.0	98.0	98.0	87.1	72.7	58.3
3500	77	123.3	11.4	87.2	63.6	40.0	-	-	-	112.9	12.6	84.4	60.2	36.0	-	-	-
	72	117.8	11.3	97.1	78.4	59.7	41.1	-	-	109.0	12.6	93.1	74.4	55.7	37.0	-	-
	67	111.4	11.3	107.1	93.3	79.5	60.8	42.2	-	103.9	12.5	101.7	88.5	75.3	56.8	38.3	-
	62	110.7	11.3	108.6	103.9	99.2	80.6	62.0	43.5	103.8	12.6	101.9	98.5	95.0	76.7	58.4	40.1
	57	110.0	11.3	108.9	108.9	108.9	100.4	81.9	63.4	103.7	12.6	102.1	102.1	102.1	96.6	78.5	60.5
4000	77	123.0	11.4	97.1	68.1	39.2	-	-	-	112.5	12.6	94.3	64.6	35.0	-	-	-
	72	120.1	11.3	104.5	83.5	62.4	41.4	-	-	111.3	12.6	100.1	79.1	58.2	37.3	-	-
	67	115.7	11.3	111.9	98.8	85.7	64.3	42.9	-	107.9	12.5	105.9	93.6	81.4	60.2	39.0	-
	62	115.0	11.3	113.1	111.0	108.9	87.2	65.6	43.9	107.8	12.5	106.0	105.3	104.6	83.1	61.7	40.2
	57	114.3	11.3	113.4	113.4	113.4	110.2	88.2	66.2	107.7	12.5	106.1	106.1	106.1	106.1	84.3	62.6
4500	72	122.5	11.3	111.9	88.5	65.1	41.6	-	-	113.7	12.5	107.0	83.9	60.7	37.6	-	-
	67	119.9	11.3	116.8	104.3	91.9	67.8	43.7	-	111.9	12.5	110.0	98.7	87.5	63.6	39.6	-
	62	119.3	11.3	117.5	117.5	117.5	93.9	69.1	44.3	111.7	12.5	110.1	110.1	110.1	89.6	64.9	40.2
	57	118.6	11.3	117.8	117.8	117.8	117.8	94.5	69.0	111.6	12.5	110.2	110.2	110.2	110.2	90.1	64.7
5000	72	124.9	11.3	119.3	93.5	67.7	41.9	-	-	116.1	12.5	114.0	88.6	63.2	37.9	-	-
	67	124.2	11.2	121.6	109.8	98.1	71.2	44.4	-	115.9	12.4	114.1	103.8	93.6	66.9	40.3	-
	62	123.6	11.2	121.9	121.9	121.9	100.5	72.6	44.7	115.7	12.4	114.2	114.2	114.2	96.0	68.1	40.2
	57	122.9	11.2	122.2	122.2	122.2	122.2	100.8	71.9	115.6	12.4	114.3	114.3	114.3	114.3	95.9	66.8

1. These capacities are gross ratings. For net capacity, deduct the supply air blower motor heat (MBh = 3.415 x kW). Refer to the appropriate Blower Performance Table for the kW of the supply air blower motor.
2. These ratings include the condenser fan motors (total 1 kW) and the compressor motors but not the supply air blower motor.

ZQ04-06 Cooling Capacities

ZQ04 (3.0 Ton)

Air on Evaporator Coil		Temperature of Air on Condenser Coil															
		Total Capacity[1] (MBh)	Total Input (kW)[2]	Sensible Capacity (MBh) Return Dry Bulb (°F)						Total Capacity[1] (MBh)	Total Input (kW)[2]	Sensible Capacity (MBh) Return Dry Bulb (°F)					
CFM	WB (°F)			90	85	80	75	70	65			90	85	80	75	70	65
		75°F								85°F							
750	77	42.7	2.1	22.8	19.1	15.4	-	-	-	41.4	2.4	22.1	18.3	14.6	-	-	-
	72	39.9	2.1	27.3	23.3	19.3	15.4	-	-	38.3	2.4	26.5	22.5	18.4	14.4	-	-
	67	37.1	2.1	31.5	27.6	23.3	19.2	15.4	-	35.2	2.3	30.8	26.6	22.3	18.2	14.3	-
	62	34.3	2.1	31.5	29.4	27.3	23.4	19.5	15.5	33.1	2.3	31.9	29.0	26.2	22.3	18.3	14.4
900	77	42.7	2.1	24.0	19.5	14.9	-	-	-	41.4	2.4	23.7	19.0	14.2	-	-	-
	72	40.3	2.1	28.7	24.3	19.9	15.4	-	-	38.7	2.4	28.1	23.6	19.1	14.5	-	-
	67	37.9	2.1	33.3	29.1	24.8	20.2	15.8	-	36.1	2.3	32.5	28.2	23.9	19.3	14.7	-
	62	35.7	2.1	33.3	31.5	29.8	25.2	20.6	16.0	34.5	2.3	33.4	31.1	28.7	24.1	19.5	14.9
	57	33.5	2.0	33.3	33.3	33.3	30.0	25.3	20.7	33.4	2.3	33.4	33.4	33.4	28.9	24.2	19.6
1050	77	42.6	2.1	25.3	19.9	14.5	-	-	-	41.3	2.4	25.3	19.6	13.9	-	-	-
	72	40.6	2.1	30.1	25.2	20.4	15.5	-	-	39.2	2.4	29.7	24.7	19.7	14.7	-	-
	67	38.7	2.1	34.8	30.6	26.3	21.1	16.2	-	37.0	2.3	34.1	29.8	25.5	20.3	15.2	-
	62	37.1	2.1	35.2	33.7	32.2	27.0	21.7	16.4	35.9	2.3	34.9	33.1	31.3	26.0	20.7	15.4
	57	35.5	2.1	35.5	35.5	35.5	32.7	27.2	21.8	35.2	2.3	35.2	35.2	35.2	31.6	26.2	20.7
1200	77	42.5	2.1	26.5	20.3	14.0	-	-	-	41.3	2.4	26.9	20.2	13.5	-	-	-
	72	41.0	2.1	31.5	26.2	20.9	15.6	-	-	39.6	2.4	31.3	25.8	20.3	14.8	-	-
	67	39.4	2.1	36.4	32.1	27.8	22.1	16.6	-	38.0	2.3	35.7	31.4	27.1	21.3	15.6	-
	62	38.5	2.1	37.0	35.8	34.6	28.7	22.8	16.9	37.3	2.3	36.5	35.2	33.8	27.9	21.8	15.8
	57	37.6	2.1	37.6	37.6	37.6	35.3	29.1	22.9	36.9	2.3	36.9	36.9	36.9	34.4	28.1	21.9
1350	72	41.3	2.1	32.8	27.1	21.4	15.7	-	-	40.1	2.4	32.9	26.9	20.9	14.9	-	-
	67	40.2	2.1	37.9	33.6	29.2	23.0	16.9	-	38.9	2.3	37.3	33.0	28.7	22.3	16.0	-
	62	39.9	2.1	38.8	37.9	37.1	30.5	23.9	17.4	38.8	2.3	38.0	37.2	36.4	29.7	23.0	16.3
	57	39.7	2.1	39.7	39.7	39.7	37.9	30.9	24.0	38.7	2.3	38.7	38.7	38.7	37.1	30.1	23.0
1500	72	41.7	2.1	34.2	28.1	21.9	15.7	-	-	40.5	2.3	34.5	28.0	21.5	15.1	-	-
	67	41.0	2.1	39.4	35.1	30.7	24.0	17.3	-	39.8	2.3	38.8	34.5	30.2	23.3	16.4	-
	62	41.4	2.1	40.7	40.1	39.5	32.3	25.1	17.8	40.2	2.3	39.5	39.2	39.0	31.6	24.2	16.8
	57	41.7	2.1	41.7	41.7	41.7	40.5	32.8	25.1	40.5	2.4	40.2	40.2	40.2	39.8	32.0	24.2
		95°F								105°F							
750	77	40.2	2.7	21.4	17.6	13.8	-	-	-	37.0	3.1	20.2	16.4	12.6	-	-	-
	72	36.7	2.6	25.8	21.7	17.5	13.4	-	-	33.8	3.0	24.5	20.4	16.4	12.3	-	-
	67	33.2	2.6	30.2	25.7	21.3	17.3	13.2	-	30.7	3.0	28.7	24.4	20.1	16.1	12.1	-
	62	31.9	2.6	31.9	28.7	25.0	21.1	17.2	13.3	30.0	2.9	30.0	27.0	23.9	19.9	15.9	11.9
900	77	40.1	2.7	23.4	18.5	13.6	-	-	-	37.1	3.0	22.4	17.4	12.4	-	-	-
	72	37.2	2.6	27.6	22.9	18.3	13.6	-	-	34.5	3.0	26.3	21.7	17.1	12.5	-	-
	67	34.3	2.6	31.8	27.4	23.0	18.3	13.7	-	31.9	3.0	30.2	26.0	21.8	17.2	12.5	-
	62	33.3	2.6	33.3	30.6	27.7	23.0	18.4	13.8	31.3	2.9	31.3	28.9	26.5	21.8	17.1	12.4
	57	33.3	2.6	33.3	33.3	32.4	27.8	23.1	18.5	31.3	2.9	31.3	31.3	31.2	26.5	21.7	16.9
1050	77	40.1	2.7	25.3	19.3	13.3	-	-	-	37.2	3.0	24.6	18.4	12.2	-	-	-
	72	37.7	2.6	29.4	24.2	19.0	13.8	-	-	35.1	3.0	28.1	23.0	17.8	12.7	-	-
	67	35.4	2.6	33.4	29.0	24.7	19.4	14.1	-	33.0	3.0	31.6	27.6	23.5	18.2	12.9	-
	62	34.7	2.6	34.7	32.6	30.4	25.0	19.6	14.3	32.6	2.9	32.5	30.9	29.2	23.7	18.3	12.8
	57	34.8	2.6	34.8	34.8	34.8	30.6	25.2	19.7	32.7	2.9	32.7	32.7	32.7	28.8	23.6	18.5
1200	77	40.1	2.6	27.3	20.1	13.0	-	-	-	37.4	3.0	26.7	19.3	11.9	-	-	-
	72	38.3	2.6	31.1	25.4	19.7	14.0	-	-	35.8	3.0	29.9	24.2	18.5	12.9	-	-
	67	36.5	2.6	35.0	30.7	26.4	20.5	14.6	-	34.2	3.0	33.1	29.1	25.2	19.2	13.3	-
	62	36.1	2.6	35.9	34.5	33.1	27.0	20.9	14.8	33.9	3.0	33.7	32.8	31.8	25.6	19.5	13.3
	57	36.3	2.6	36.3	36.3	36.3	33.5	27.2	20.9	34.0	3.0	34.0	34.0	34.0	31.1	25.6	20.1
1350	72	38.8	2.6	32.9	26.7	20.4	14.2	-	-	36.5	3.0	31.7	25.5	19.3	13.0	-	-
	67	37.6	2.6	36.6	32.4	28.1	21.6	15.0	-	35.4	3.0	34.6	30.7	26.9	20.3	13.7	-
	62	37.6	2.6	37.1	36.5	35.8	28.9	22.1	15.3	35.2	3.0	34.9	34.7	34.4	27.5	20.7	13.8
	57	37.8	2.6	37.7	37.7	37.7	36.3	29.2	22.1	35.4	3.0	35.3	35.3	35.3	33.4	27.6	21.8
1500	72	39.3	2.6	34.7	27.9	21.2	14.4	-	-	37.1	3.0	33.6	26.8	20.0	13.2	-	-
	67	38.7	2.6	38.3	34.0	29.8	22.6	15.5	-	36.6	3.0	36.0	32.3	28.5	21.3	14.1	-
	62	39.0	2.6	38.4	38.4	38.4	30.9	23.3	15.8	36.5	3.0	36.1	36.1	36.1	29.5	21.9	14.2
	57	39.3	2.6	38.4	38.4	38.4	38.4	31.2	23.3	36.7	3.0	36.2	36.2	36.2	35.7	29.6	23.4

ZQ04 (3.0 Ton) (Continued)

Air on Evaporator Coil		Temperature of Air on Condenser Coil															
		Total Capacity[1] (MBh)	Total Input (kW)[2]	Sensible Capacity (MBh) Return Dry Bulb (°F)						Total Capacity[1] (MBh)	Total Input (kW)[2]	Sensible Capacity (MBh) Return Dry Bulb (°F)					
CFM	WB (°F)			90	85	80	75	70	65			90	85	80	75	70	65
		115°F								125°F							
750	77	33.9	3.4	19.0	15.2	11.4	-	-	-	30.7	3.8	17.8	14.0	10.2	-	-	-
	72	31.0	3.4	23.1	19.2	15.2	11.2	-	-	28.2	3.7	21.8	17.9	14.0	10.1	-	-
	67	28.1	3.3	27.3	23.1	19.0	15.0	10.9	-	25.6	3.7	25.6	21.8	17.8	13.8	9.8	-
	62	28.0	3.3	28.0	25.4	22.8	18.7	14.6	10.5	26.1	3.7	25.9	23.8	21.7	17.5	13.3	9.1
900	77	34.1	3.4	21.4	16.3	11.2	-	-	-	31.1	3.7	20.4	15.2	10.0	-	-	-
	72	31.8	3.4	25.0	20.5	15.9	11.4	-	-	29.1	3.7	23.7	19.2	14.8	10.3	-	-
	67	29.4	3.3	28.6	24.6	20.6	16.0	11.3	-	27.0	3.7	27.0	23.2	19.5	14.8	10.1	-
	62	29.2	3.3	29.2	27.3	25.4	20.6	15.8	11.0	27.2	3.7	27.0	25.6	24.2	19.3	14.4	9.5
	57	29.4	3.3	29.4	29.4	29.4	25.1	20.2	15.3	27.4	3.6	27.0	27.0	27.0	23.8	18.7	13.6
1050	77	34.4	3.4	23.8	17.4	11.0	-	-	-	31.5	3.7	23.1	16.5	9.9	-	-	-
	72	32.5	3.3	26.9	21.8	16.7	11.5	-	-	30.0	3.7	25.6	20.5	15.5	10.4	-	-
	67	30.7	3.3	29.9	26.1	22.3	17.0	11.7	-	28.4	3.7	28.1	24.6	21.1	15.8	10.4	-
	62	30.5	3.3	30.3	29.1	27.9	22.4	16.9	11.4	28.3	3.7	28.1	27.4	26.7	21.1	15.5	9.9
	57	30.6	3.3	30.6	30.6	30.6	26.9	22.1	17.3	28.5	3.7	28.2	28.2	28.2	25.1	20.6	16.1
1200	77	34.7	3.4	26.2	18.5	10.8	-	-	-	31.9	3.7	25.7	17.7	9.7	-	-	-
	72	33.3	3.3	28.7	23.0	17.4	11.7	-	-	30.8	3.7	27.5	21.9	16.2	10.6	-	-
	67	32.0	3.3	31.2	27.6	24.0	18.0	12.1	-	29.7	3.7	29.3	26.0	22.7	16.8	10.8	-
	62	31.7	3.3	31.5	31.0	30.5	24.3	18.1	11.8	29.4	3.7	29.3	29.3	29.3	23.0	16.6	10.3
	57	31.8	3.3	31.8	31.8	31.8	28.7	24.1	19.4	29.5	3.7	29.4	29.4	29.4	26.4	22.5	18.6
1350	72	34.1	3.3	30.6	24.3	18.1	11.9	-	-	31.7	3.7	29.4	23.2	16.9	10.7	-	-
	67	33.3	3.3	32.5	29.1	25.6	19.0	12.4	-	31.1	3.7	30.4	27.4	24.4	17.7	11.1	-
	62	32.9	3.3	32.7	32.7	32.7	26.2	19.2	12.3	30.5	3.7	30.4	30.4	30.4	24.8	17.8	10.7
	57	33.0	3.4	32.9	32.9	32.9	30.5	26.0	21.4	30.6	3.7	30.5	30.5	30.5	27.7	24.4	21.1
1500	72	34.9	3.3	32.4	25.6	18.8	12.0	-	-	32.6	3.7	31.3	24.5	17.7	10.9	-	-
	67	34.6	3.3	33.8	30.5	27.3	20.0	12.8	-	32.5	3.7	31.6	28.8	26.0	18.7	11.5	-
	62	34.1	3.3	33.8	33.8	33.8	28.0	20.4	12.7	31.6	3.7	31.6	31.6	31.6	26.6	18.9	11.1
	57	34.2	3.4	33.9	33.9	33.9	32.3	27.9	23.5	31.6	3.8	31.6	31.6	31.6	28.9	26.3	23.6

1. These capacities are gross ratings. For net capacity, deduct the supply air blower motor heat (MBh = 3.415 x kW). Refer to the appropriate Blower Performance Table for the kW of the supply air blower motor.
2. These ratings include the condenser fan motors (total 1 kW) and the compressor motors but not the supply air blower motor.

ZQ05 (4.0 Ton)

Air on Evaporator Coil		Temperature of Air on Condenser Coil															
		Total Capacity[1] (MBh)	Total Input (kW)[2]	Sensible Capacity (MBh) Return Dry Bulb (°F)						Total Capacity[1] (MBh)	Total Input (kW)[2]	Sensible Capacity (MBh) Return Dry Bulb (°F)					
CFM	WB (°F)			90	85	80	75	70	65			90	85	80	75	70	65
		75°F								85°F							
1000	77	61.7	2.8	31.1	23.1	15.0	-	-	-	59.0	3.2	29.6	21.7	13.7	-	-	-
	72	56.3	2.8	37.3	30.4	23.5	16.6	-	-	53.4	3.1	35.9	29.0	22.1	15.2	-	-
	67	50.9	2.7	43.4	37.7	32.0	26.6	21.4	-	47.9	3.1	42.2	36.3	30.5	25.2	20.1	-
	62	47.7	2.7	43.4	41.9	40.5	37.2	33.1	29.5	45.8	3.0	43.4	41.1	38.8	35.6	32.0	28.6
1200	77	62.7	2.8	34.0	25.1	16.2	-	-	-	59.9	3.2	33.0	23.9	14.9	-	-	-
	72	57.7	2.8	40.1	32.6	25.2	17.7	-	-	54.8	3.1	38.9	31.3	23.8	16.3	-	-
	67	52.6	2.7	46.2	40.2	34.2	27.9	21.7	-	49.8	3.1	44.8	38.8	32.8	26.6	20.4	-
	62	49.8	2.7	46.2	44.7	43.2	38.5	33.3	28.3	47.9	3.1	45.7	43.7	41.7	37.0	32.0	27.2
	57	47.0	2.7	46.2	46.2	46.2	46.2	44.8	41.1	46.1	3.0	46.1	46.1	46.1	46.1	43.7	40.2
1400	77	63.7	2.8	36.8	27.1	17.3	-	-	-	60.7	3.2	36.3	26.1	16.0	-	-	-
	72	59.0	2.8	42.9	34.8	26.8	18.8	-	-	56.2	3.1	41.8	33.7	25.5	17.4	-	-
	67	54.3	2.7	48.9	42.6	36.3	29.1	22.1	-	51.7	3.1	47.3	41.2	35.1	27.9	20.7	-
	62	52.0	2.7	48.9	47.4	45.9	39.8	33.4	27.1	49.9	3.1	48.1	46.4	44.6	38.5	32.1	25.8
	57	49.6	2.7	48.9	48.9	48.9	48.9	44.6	39.3	48.4	3.1	48.4	48.4	48.4	48.4	43.5	38.2
1600	77	64.7	2.9	39.6	29.0	18.5	-	-	-	61.5	3.2	39.6	28.4	17.1	-	-	-
	72	60.4	2.8	45.7	37.1	28.5	19.9	-	-	57.6	3.2	44.8	36.0	27.3	18.5	-	-
	67	56.0	2.7	51.7	45.1	38.5	30.4	22.4	-	53.6	3.1	49.9	43.7	37.4	29.2	21.0	-
	62	54.1	2.7	51.7	50.1	48.6	41.2	33.5	25.9	52.0	3.1	50.4	49.0	47.6	39.9	32.2	24.5
	57	52.2	2.7	51.7	51.7	51.7	51.6	44.5	37.5	50.7	3.1	50.7	50.7	50.7	50.5	43.4	36.2
1800	72	61.8	2.8	48.5	39.3	30.2	21.0	-	-	59.0	3.2	47.7	38.4	29.0	19.6	-	-
	67	57.8	2.8	54.5	47.6	40.7	31.7	22.7	-	55.5	3.1	52.5	46.1	39.7	30.5	21.2	-
	62	56.3	2.8	54.5	52.9	51.3	42.5	33.6	24.7	54.1	3.1	52.8	51.6	50.5	41.4	32.2	23.1
	57	54.8	2.8	54.5	54.5	54.5	53.1	44.4	35.7	52.9	3.1	52.9	52.9	52.9	52.2	43.2	34.3
2000	72	63.1	2.8	51.3	41.5	31.8	22.1	-	-	60.3	3.2	50.7	40.7	30.7	20.7	-	-
	67	59.5	2.8	57.2	50.1	42.9	33.0	23.0	-	57.4	3.1	55.1	48.6	42.0	31.8	21.5	-
	62	58.4	2.8	57.2	55.6	54.0	43.8	33.7	23.5	56.1	3.1	55.1	54.2	53.4	42.8	32.3	21.8
	57	57.4	2.8	57.2	57.2	57.2	54.7	44.3	33.9	55.2	3.2	55.1	55.1	55.1	53.9	43.1	32.3
		95°F								105°F							
1000	77	56.3	3.5	28.1	20.3	12.5	-	-	-	51.7	4.1	28.9	21.2	13.5	-	-	-
	72	50.6	3.5	34.5	27.6	20.7	13.8	-	-	47.7	4.0	34.0	27.4	20.8	14.2	-	-
	67	44.8	3.4	40.9	34.9	29.0	23.9	18.9	-	43.7	3.9	39.1	33.6	28.1	23.3	18.5	-
	62	43.9	3.4	43.3	40.2	37.2	34.0	30.8	27.6	42.9	3.9	41.5	38.4	35.4	32.4	29.5	26.5
1200	77	57.0	3.5	31.9	22.8	13.6	-	-	-	52.3	4.1	32.2	23.3	14.3	-	-	-
	72	52.0	3.5	37.6	30.1	22.5	14.9	-	-	48.8	4.0	36.8	29.5	22.1	14.8	-	-
	67	46.9	3.4	43.3	37.4	31.4	25.3	19.1	-	45.3	3.9	41.3	35.6	30.0	24.2	18.4	-
	62	45.9	3.4	45.2	42.8	40.3	35.6	30.8	26.1	44.4	4.0	43.2	40.5	37.8	33.6	29.3	25.1
	57	45.2	3.4	45.2	45.2	45.2	45.2	42.6	39.3	43.8	4.0	43.8	43.8	43.8	42.9	40.2	37.5
1400	77	57.7	3.6	35.8	25.2	14.7	-	-	-	53.0	4.1	35.6	25.4	15.1	-	-	-
	72	53.4	3.5	40.8	32.5	24.3	16.0	-	-	49.9	4.0	39.5	31.5	23.5	15.5	-	-
	67	49.1	3.4	45.7	39.8	33.8	26.6	19.3	-	46.9	3.9	43.4	37.6	31.8	25.1	18.3	-
	62	47.9	3.4	47.2	45.3	43.4	37.1	30.9	24.6	45.9	4.0	44.8	42.5	40.2	34.7	29.2	23.7
	57	47.2	3.4	47.2	47.2	47.2	47.2	42.4	37.1	45.3	4.0	45.3	45.3	45.3	44.3	40.0	35.8
1600	77	58.4	3.6	39.6	27.7	15.8	-	-	-	53.6	4.1	39.0	27.5	15.9	-	-	-
	72	54.8	3.5	43.9	35.0	26.0	17.1	-	-	51.1	4.0	42.3	33.5	24.8	16.1	-	-
	67	51.2	3.5	48.2	42.2	36.3	27.9	19.5	-	48.5	4.0	45.6	39.6	33.7	26.0	18.2	-
	62	49.9	3.5	49.1	47.8	46.5	38.7	30.9	23.1	47.4	4.0	46.5	44.6	42.6	35.8	29.0	22.2
	57	49.1	3.5	49.1	49.1	49.1	49.1	42.2	35.0	46.7	4.0	46.7	46.7	46.7	45.7	39.8	34.0
1800	72	56.2	3.5	47.0	37.4	27.8	18.2	-	-	52.2	4.0	45.0	35.6	26.2	16.8	-	-
	67	53.3	3.5	50.6	44.7	38.7	29.3	19.8	-	50.1	4.0	47.7	41.6	35.6	26.8	18.1	-
	62	51.8	3.5	51.1	50.4	49.6	40.3	30.9	21.6	48.9	4.0	48.2	46.6	45.0	36.9	28.9	20.8
	57	51.1	3.5	51.1	51.1	51.1	51.1	42.1	32.8	48.2	4.0	48.2	48.2	48.2	47.0	39.6	32.3
2000	72	57.6	3.5	50.1	39.9	29.6	19.3	-	-	53.3	4.0	47.8	37.6	27.5	17.4	-	-
	67	55.4	3.5	53.0	47.1	41.2	30.6	20.0	-	51.7	4.0	49.8	43.6	37.4	27.7	18.0	-
	62	53.8	3.5	53.0	52.9	52.8	41.9	30.9	20.0	50.4	4.0	49.9	48.6	47.4	38.1	28.7	19.4
	57	53.0	3.5	53.0	53.0	53.0	53.0	41.9	30.7	49.9	4.0	49.9	49.9	49.9	48.4	39.5	30.5

ZQ05 (4.0 Ton) (Continued)

Air on Evaporator Coil		Temperature of Air on Condenser Coil															
		Total Capacity[1] (MBh)	Total Input (kW)[2]	Sensible Capacity (MBh)						Total Capacity[1] (MBh)	Total Input (kW)[2]	Sensible Capacity (MBh)					
CFM	WB (°F)			Return Dry Bulb (°F)								Return Dry Bulb (°F)					
				90	85	80	75	70	65			90	85	80	75	70	65
		115°F								125°F							
1000	77	47.1	4.6	29.7	22.1	14.5	-	-	-	42.4	5.1	30.4	23.0	15.5	-	-	-
	72	44.8	4.5	33.5	27.2	20.9	14.6	-	-	41.9	5.0	33.0	27.0	20.9	14.9	-	-
	67	42.6	4.4	37.3	32.3	27.2	22.7	18.2	-	41.4	4.9	35.6	31.0	26.4	22.1	17.8	-
	62	42.0	4.5	39.7	36.6	33.6	30.8	28.1	25.3	41.0	5.0	37.9	34.8	31.8	29.3	26.7	24.2
1200	77	47.7	4.6	32.6	23.8	15.0	-	-	-	43.0	5.1	32.9	24.3	15.8	-	-	-
	72	45.7	4.5	35.9	28.8	21.8	14.7	-	-	42.5	5.0	35.0	28.2	21.4	14.6	-	-
	67	43.6	4.4	39.2	33.9	28.5	23.1	17.7	-	42.0	5.0	37.1	32.1	27.1	22.1	17.1	-
	62	43.0	4.5	41.1	38.2	35.3	31.5	27.8	24.0	41.5	5.0	39.0	35.9	32.8	29.5	26.3	23.0
	57	42.4	4.5	42.4	42.4	42.0	39.9	37.8	35.7	41.0	5.1	40.9	39.6	38.4	36.9	35.5	34.0
1400	77	48.3	4.6	35.4	25.5	15.6	-	-	-	43.6	5.1	35.3	25.6	16.0	-	-	-
	72	46.5	4.5	38.3	30.5	22.7	14.9	-	-	43.1	5.0	37.0	29.5	21.9	14.4	-	-
	67	44.7	4.5	41.1	35.5	29.8	23.6	17.3	-	42.6	5.0	38.7	33.3	27.8	22.1	16.3	-
	62	44.0	4.5	42.5	39.7	37.0	32.2	27.5	22.7	42.0	5.0	40.2	36.9	33.7	29.8	25.8	21.8
	57	43.4	4.5	43.4	43.4	43.4	40.9	37.6	34.4	41.5	5.1	41.5	40.6	39.6	37.4	35.2	33.0
1600	77	48.9	4.6	38.3	27.2	16.1	-	-	-	44.2	5.1	37.7	27.0	16.3	-	-	-
	72	47.4	4.5	40.6	32.1	23.6	15.1	-	-	43.7	5.0	39.0	30.7	22.4	14.1	-	-
	67	45.8	4.5	42.9	37.0	31.1	24.0	16.9	-	43.2	5.0	40.3	34.4	28.6	22.0	15.5	-
	62	45.0	4.5	43.9	41.3	38.6	32.9	27.2	21.4	42.5	5.0	41.3	38.0	34.7	30.0	25.3	20.6
	57	44.3	4.5	44.3	44.3	44.3	41.8	37.4	33.1	41.9	5.0	41.9	41.6	40.8	37.9	35.0	32.1
1800	72	48.2	4.5	43.0	33.8	24.5	15.3	-	-	44.2	5.0	41.0	31.9	22.9	13.8	-	-
	67	46.9	4.5	44.8	38.6	32.4	24.4	16.4	-	43.7	5.0	41.9	35.6	29.3	22.0	14.8	-
	62	46.0	4.5	45.3	42.8	40.3	33.6	26.8	20.1	43.1	5.0	42.5	39.1	35.7	30.2	24.8	19.4
	57	45.3	4.5	45.3	45.3	45.3	42.7	37.2	31.7	42.5	5.0	42.5	42.5	42.0	38.4	34.8	31.2
2000	72	49.1	4.5	45.4	35.4	25.4	15.5	-	-	44.8	5.0	43.0	33.2	23.4	13.6	-	-
	67	48.0	4.5	46.7	40.2	33.7	24.9	16.0	-	44.3	5.0	43.5	36.7	30.0	22.0	14.0	-
	62	47.0	4.5	46.7	44.4	42.0	34.3	26.5	18.8	43.6	5.0	43.6	40.1	36.6	30.5	24.3	18.2
	57	46.7	4.5	46.7	46.7	46.7	43.7	37.0	30.4	43.6	5.0	43.6	43.5	43.3	38.9	34.6	30.3

1. These capacities are gross ratings. For net capacity, deduct the supply air blower motor heat (MBh = 3.415 x kW). Refer to the appropriate Blower Performance Table for the kW of the supply air blower motor.
2. These ratings include the condenser fan motors (total 1 kW) and the compressor motors but not the supply air blower motor.

ZQ06 (5.0 Ton)

Air on Evaporator Coil		Temperature of Air on Condenser Coil															
		Total Capacity[1] (MBh)	Total Input (kW)[2]	Sensible Capacity (MBh) Return Dry Bulb (°F)						Total Capacity[1] (MBh)	Total Input (kW)[2]	Sensible Capacity (MBh) Return Dry Bulb (°F)					
CFM	WB (°F)			90	85	80	75	70	65			90	85	80	75	70	65
		75°F								85°F							
1250	77	71.6	3.4	36.3	30.7	25.1	-	-	-	69.9	3.8	35.6	29.7	23.8	-	-	-
	72	67.7	3.4	45.4	38.8	32.1	25.4	-	-	65.3	3.8	44.4	37.6	30.7	23.9	-	-
	67	63.8	3.4	54.5	46.8	39.1	32.2	25.5	-	60.8	3.7	53.3	45.5	37.7	30.7	23.9	-
	62	62.5	3.3	54.6	50.2	46.1	38.0	32.2	25.2	59.3	3.7	54.3	49.5	44.6	36.2	30.8	23.9
1500	77	72.8	3.4	39.9	32.2	24.4	-	-	-	70.9	3.8	39.4	31.3	23.2	-	-	-
	72	69.2	3.4	48.7	41.0	33.2	25.4	-	-	66.8	3.8	47.8	39.8	31.9	23.9	-	-
	67	65.7	3.4	57.6	49.7	41.9	33.7	25.8	-	62.6	3.8	56.2	48.4	40.5	32.3	24.3	-
	62	64.3	3.3	57.6	54.1	50.6	41.0	34.0	25.7	61.3	3.7	57.1	53.1	49.2	39.7	32.6	24.3
	57	62.9	3.3	57.6	57.6	57.6	50.8	42.3	33.7	60.0	3.7	57.9	57.9	57.8	49.3	40.9	32.4
1750	77	73.9	3.4	43.6	33.7	23.8	-	-	-	71.9	3.8	43.2	33.0	22.7	-	-	-
	72	70.8	3.4	52.1	43.1	34.2	25.3	-	-	68.2	3.8	51.2	42.1	33.0	24.0	-	-
	67	67.6	3.4	60.6	52.6	44.6	35.3	26.1	-	64.5	3.8	59.1	51.2	43.4	33.9	24.6	-
	62	66.1	3.4	60.8	57.9	55.1	43.7	35.9	26.3	63.3	3.8	59.9	56.8	53.7	43.1	34.3	24.6
	57	64.6	3.3	61.1	61.1	61.1	55.6	45.7	35.8	62.0	3.8	60.7	60.7	60.7	54.0	44.0	34.0
2000	77	75.1	3.5	47.2	35.2	23.1	-	-	-	72.9	3.9	47.1	34.6	22.2	-	-	-
	72	72.3	3.4	55.4	45.3	35.3	25.2	-	-	69.6	3.8	54.5	44.4	34.2	24.0	-	-
	67	69.5	3.4	63.6	55.5	47.4	36.9	26.4	-	66.3	3.8	62.0	54.1	46.2	35.5	25.0	-
	62	67.9	3.4	64.1	61.8	59.5	47.5	37.8	26.9	65.2	3.8	62.7	60.5	58.2	46.5	36.1	25.0
	57	66.3	3.4	64.6	64.6	64.6	60.4	49.1	37.8	64.1	3.8	63.4	63.4	63.4	58.7	47.2	35.7
2250	72	73.8	3.5	58.7	47.5	36.3	25.1	-	-	71.0	3.8	57.9	46.6	35.3	24.0	-	-
	67	71.4	3.4	66.6	58.4	50.2	38.4	26.8	-	68.2	3.8	64.9	57.0	49.0	37.2	25.3	-
	62	69.7	3.4	67.4	65.7	64.0	51.2	39.6	27.5	67.2	3.8	65.5	64.1	62.7	50.0	37.8	25.4
	57	68.0	3.4	68.0	68.0	68.0	65.2	52.5	39.8	66.2	3.8	66.1	66.1	66.1	63.4	50.4	37.4
2500	72	75.3	3.5	62.1	49.7	37.4	25.0	-	-	72.5	3.9	61.3	48.9	36.5	24.1	-	-
	67	73.3	3.4	69.7	61.3	52.9	40.0	27.1	-	70.0	3.9	67.9	59.9	51.9	38.8	25.6	-
	62	71.5	3.5	69.7	69.6	68.5	55.0	41.5	28.0	69.1	3.9	68.3	67.8	67.2	53.4	39.6	25.8
	57	69.8	3.5	69.9	69.9	69.9	69.9	55.9	41.9	68.2	3.9	68.4	68.4	68.4	68.1	53.6	39.0
		95°F								105°F							
1250	77	68.2	4.2	34.9	28.6	22.4	-	-	-	63.3	4.8	33.9	27.5	21.1	-	-	-
	72	63.0	4.2	43.5	36.4	29.4	22.3	-	-	58.7	4.7	41.8	34.8	27.8	20.8	-	-
	67	57.7	4.1	52.1	44.2	36.3	29.3	22.3	-	54.1	4.7	49.7	42.1	34.5	27.5	20.5	-
	62	56.2	4.1	54.2	48.7	43.2	36.3	29.4	22.6	52.7	4.7	50.9	46.0	41.2	34.2	27.2	20.1
1500	77	69.0	4.2	38.9	30.5	22.0	-	-	-	64.0	4.8	38.0	29.3	20.5	-	-	-
	72	64.3	4.2	46.9	38.7	30.6	22.5	-	-	60.0	4.8	45.1	37.0	29.0	20.9	-	-
	67	59.6	4.1	54.9	47.0	39.2	30.9	22.7	-	56.0	4.7	52.2	44.8	37.4	29.1	20.8	-
	62	58.3	4.2	56.6	52.2	47.7	39.4	31.1	22.8	54.8	4.7	53.1	49.5	45.8	37.3	28.9	20.4
	57	57.0	4.2	57.0	57.0	56.3	47.9	39.5	31.0	53.6	4.8	53.6	53.6	53.6	45.6	36.9	28.3
1750	77	69.9	4.2	42.9	32.3	21.6	-	-	-	64.8	4.8	42.2	31.1	20.0	-	-	-
	72	65.6	4.2	50.3	41.1	31.9	22.6	-	-	61.4	4.8	48.4	39.3	30.1	20.9	-	-
	67	61.4	4.2	57.7	49.9	42.1	32.6	23.1	-	57.9	4.8	54.7	47.5	40.2	30.7	21.2	-
	62	60.4	4.2	59.0	55.6	52.3	42.5	32.7	23.0	56.9	4.8	55.4	52.9	50.4	40.5	30.6	20.7
	57	59.4	4.2	59.4	59.4	59.4	52.5	42.4	32.3	55.9	4.8	55.9	55.9	55.9	50.3	40.0	29.8
2000	77	70.7	4.2	46.9	34.1	21.2	-	-	-	65.5	4.8	46.4	32.9	19.4	-	-	-
	72	67.0	4.2	53.7	43.4	33.1	22.8	-	-	62.7	4.8	51.8	41.5	31.3	21.0	-	-
	67	63.2	4.2	60.4	52.7	45.0	34.2	23.5	-	59.9	4.8	57.2	50.1	43.1	32.3	21.5	-
	62	62.5	4.2	61.3	59.1	56.9	45.6	34.4	23.1	59.0	4.8	57.7	56.3	55.0	43.6	32.3	21.0
	57	61.9	4.2	61.9	61.9	61.9	57.0	45.3	33.6	58.2	4.8	58.2	58.2	58.2	54.9	43.1	31.2
2250	72	68.3	4.2	57.1	45.7	34.4	23.0	-	-	64.0	4.8	55.1	43.7	32.4	21.1	-	-
	67	65.0	4.2	63.2	55.6	47.9	35.9	23.8	-	61.8	4.8	59.7	52.8	46.0	33.9	21.9	-
	62	64.7	4.2	63.7	62.6	61.4	48.7	36.0	23.3	61.2	4.8	59.9	59.7	59.5	46.8	34.0	21.3
	57	64.3	4.2	64.1	64.1	64.1	61.6	48.2	34.9	60.5	4.9	60.2	60.2	60.2	59.6	46.2	32.7
2500	72	69.6	4.3	60.5	48.1	35.61	23.2	-	-	65.4	4.8	58.4	46.0	33.6	21.1	-	-
	67	66.8	4.3	66.0	58.4	50.8	37.5	24.2	-	63.8	4.8	62.1	55.5	48.8	35.5	22.2	-
	62	66.8	4.3	66.0	66.0	66.0	51.8	37.7	23.5	63.3	4.9	62.2	62.2	62.2	49.9	35.7	21.5
	57	66.7	4.3	66.1	66.1	66.1	66.1	51.2	36.1	62.8	4.9	62.2	62.2	62.2	62.2	49.3	34.2

ZQ06 (5.0 Ton) (Continued)

Air on Evaporator Coil		Temperature of Air on Condenser Coil															
		Total Capacity[1] (MBh)	Total Input (kW)[2]	Sensible Capacity (MBh) Return Dry Bulb (°F)						Total Capacity[1] (MBh)	Total Input (kW)[2]	Sensible Capacity (MBh) Return Dry Bulb (°F)					
CFM	WB (°F)			90	85	80	75	70	65			90	85	80	75	70	65
		115°F								125°F							
1250	77	58.4	5.4	32.9	26.3	19.8	-	-	-	53.5	5.9	32.0	25.2	18.4	-	-	-
	72	54.4	5.3	40.1	33.2	26.3	19.3	-	-	50.1	5.9	38.5	31.6	24.7	17.8	-	-
	67	50.4	5.3	47.3	40.0	32.8	25.7	18.6	-	46.7	5.8	44.0	38.0	31.0	23.9	16.8	-
	62	49.1	5.3	47.5	43.4	39.2	32.1	24.9	17.7	45.6	5.9	44.2	40.7	37.3	29.9	22.6	15.3
1500	77	59.0	5.4	37.2	28.1	19.0	-	-	-	54.0	5.9	36.4	27.0	17.5	-	-	-
	72	55.7	5.3	43.4	35.3	27.3	19.3	-	-	51.4	5.9	41.6	33.6	25.7	17.7	-	-
	67	52.4	5.3	49.5	42.5	35.6	27.3	19.0	-	48.9	5.9	46.2	40.3	33.8	25.4	17.1	-
	62	51.3	5.3	49.7	46.8	43.8	35.3	26.7	18.1	47.8	5.9	46.3	44.1	41.9	33.2	24.5	15.7
	57	50.1	5.3	49.9	49.9	49.9	43.2	34.4	25.5	46.7	5.9	46.4	46.4	46.4	40.9	31.8	22.7
1750	77	59.7	5.4	41.5	29.9	18.3	-	-	-	54.6	5.9	40.8	28.7	16.7	-	-	-
	72	57.1	5.3	46.6	37.5	28.4	19.2	-	-	52.8	5.9	44.8	35.7	26.6	17.5	-	-
	67	54.5	5.3	51.7	45.1	38.4	28.8	19.3	-	51.1	5.9	48.2	42.6	36.6	27.0	17.4	-
	62	53.4	5.4	51.8	50.1	48.4	38.4	28.4	18.4	49.9	5.9	48.3	47.4	46.5	36.4	26.3	16.2
	57	52.3	5.4	52.0	52.0	52.0	48.0	37.6	27.2	48.8	6.0	48.4	48.4	48.4	45.8	35.2	24.6
2000	77	60.3	5.4	45.8	31.7	17.6	-	-	-	55.1	6.0	45.3	30.5	15.8	-	-	-
	72	58.4	5.4	49.9	39.6	29.4	19.2	-	-	54.2	5.9	47.9	37.7	27.5	17.4	-	-
	67	56.6	5.4	53.9	47.6	41.2	30.4	19.6	-	53.3	5.9	50.2	45.0	39.3	28.5	17.7	-
	62	55.6	5.4	54.0	53.5	53.0	41.6	30.2	18.8	52.1	6.0	50.3	50.3	50.3	39.6	28.1	16.7
	57	54.5	5.4	54.1	54.1	54.1	52.9	40.9	28.9	50.9	6.0	50.4	50.4	50.4	50.4	38.6	26.5
2250	72	59.8	5.4	53.1	41.8	30.4	19.1	-	-	55.6	6.0	51.1	39.8	28.5	17.2	-	-
	67	58.6	5.4	56.1	50.1	44.0	32.0	19.9	-	55.5	6.0	52.3	47.3	42.1	30.0	17.9	-
	62	57.7	5.4	56.2	56.2	56.2	44.8	32.0	19.2	54.2	6.0	52.4	52.4	52.4	42.9	30.0	17.1
	57	56.7	5.5	56.2	56.2	56.2	56.2	44.1	30.5	53.0	6.1	52.5	52.5	52.5	52.5	42.0	28.4
2500	72	61.2	5.4	56.3	43.9	31.5	19.1	-	-	56.9	6.0	54.2	41.8	29.4	17.0	-	-
	67	60.7	5.4	58.3	52.6	46.9	33.5	20.2	-	57.6	6.0	54.4	49.6	44.9	31.6	18.2	-
	62	59.8	5.5	58.3	58.3	58.3	48.0	33.8	19.6	56.4	6.1	54.4	54.4	54.4	46.1	31.8	17.6
	57	58.9	5.5	58.4	58.4	58.4	58.4	47.3	32.2	55.1	6.1	54.5	54.5	54.5	54.5	45.4	30.2

1. These capacities are gross ratings. For net capacity, deduct the supply air blower motor heat (MBh = 3.415 x kW). Refer to the appropriate Blower Performance Table for the kW of the supply air blower motor.
2. These ratings include the condenser fan motors (total 1 kW) and the compressor motors but not the supply air blower motor.

ZL08-14 Cooling Capacities

ZL08 (7.5 Ton)

Air on Evaporator Coil		Temperature of Air on Condenser Coil															
		Total Capacity[1] (MBh)	Total Input (kW)[2]	Sensible Capacity (MBh) Return Dry Bulb (°F)						Total Capacity[1] (MBh)	Total Input (kW)[2]	Sensible Capacity (MBh) Return Dry Bulb (°F)					
CFM	WB (°F)			90	85	80	75	70	65			90	85	80	75	70	65
		75°F								85°F							
1875	77	120.1	5.3	61.8	51.4	41.1	-	-	-	114.6	5.6	59.1	49.2	39.3	-	-	-
	72	108.3	5.3	71.0	61.1	51.3	41.4	-	-	104.2	5.6	69.9	59.6	49.2	38.9	-	-
	67	96.5	5.3	80.3	70.9	61.4	50.1	41.0	-	93.8	5.6	80.7	69.9	59.2	48.2	38.3	-
	62	88.7	5.2	88.7	80.6	71.6	58.1	50.6	40.1	84.9	5.6	84.9	77.9	69.1	57.1	48.0	37.5
2250	77	121.3	5.3	67.9	54.5	41.1	-	-	-	115.6	5.6	65.1	52.1	39.2	-	-	-
	72	111.0	5.3	77.5	65.6	53.6	41.8	-	-	106.4	5.6	75.8	63.7	51.6	39.4	-	-
	67	100.7	5.3	87.0	76.6	66.3	53.2	41.9	-	97.1	5.6	85.2	75.2	63.9	51.1	39.3	-
	62	94.4	5.2	92.9	86.6	78.8	64.0	53.9	41.4	90.5	5.6	85.9	83.8	76.3	62.6	51.2	38.6
	57	88.2	5.2	93.4	93.4	91.4	78.6	65.8	53.1	86.1	5.6	86.1	86.1	86.1	75.9	63.1	50.3
2625	77	122.4	5.3	74.1	57.6	41.1	-	-	-	116.5	5.6	71.1	55.1	39.0	-	-	-
	72	113.7	5.3	83.9	70.0	56.1	42.2	-	-	108.5	5.6	81.6	67.7	53.9	40.0	-	-
	67	105.0	5.3	93.7	82.4	71.1	56.2	42.7	-	100.5	5.6	92.1	80.4	68.7	54.1	40.2	-
	62	100.2	5.3	95.5	92.7	86.1	69.9	57.2	42.7	96.1	5.6	93.1	89.6	83.6	68.1	54.3	39.7
	57	97.8	5.2	97.8	97.8	97.1	86.4	71.6	56.8	94.5	5.6	94.5	94.5	94.5	83.4	68.5	53.5
3000	77	123.6	5.3	80.2	60.6	41.1	-	-	-	117.5	5.6	77.2	58.0	38.8	-	-	-
	72	116.4	5.3	90.3	74.4	58.5	42.6	-	-	110.7	5.6	87.5	71.8	56.2	40.5	-	-
	67	109.2	5.3	100.4	88.2	75.9	59.3	43.6	-	103.9	5.6	97.8	85.6	73.5	57.1	41.2	-
	62	106.0	5.3	102.4	98.7	93.4	75.7	60.5	44.0	101.6	5.6	99.1	95.5	90.8	73.6	57.5	40.8
	57	102.8	5.3	102.8	102.8	102.8	94.1	77.3	60.6	99.4	5.6	99.4	99.4	99.4	91.0	73.8	56.6
3375	72	119.1	5.3	96.7	78.8	60.9	43.0	-	-	112.8	5.6	93.3	75.9	58.5	41.0	-	-
	67	113.5	5.3	107.1	94.0	80.8	62.4	44.4	-	107.2	5.6	103.4	90.9	78.3	60.1	42.1	-
	62	111.8	5.3	108.2	104.8	100.7	81.6	63.8	45.3	107.2	5.6	104.7	101.4	98.1	79.1	60.6	41.9
	57	110.1	5.3	108.9	108.9	108.9	101.8	83.1	64.4	107.2	5.6	104.7	104.7	104.7	98.5	79.2	59.8
3750	72	121.8	5.3	103.2	83.3	63.3	43.4	-	-	115.0	5.6	99.2	80.0	60.8	41.6	-	-
	67	117.7	5.3	113.5	99.7	85.6	65.4	45.3	-	113.9	5.6	109.1	96.1	83.0	63.1	43.1	-
	62	117.6	5.3	113.7	110.8	107.9	87.5	67.1	46.6	112.8	5.6	109.2	107.2	105.3	84.5	63.8	43.0
	57	117.4	5.3	113.7	113.7	113.7	109.5	88.8	68.1	112.7	5.6	109.2	109.2	109.2	106.0	84.5	63.0
		95°F								105°F							
1875	77	109.2	5.9	56.4	47.0	37.6	-	-	-	100.5	6.4	54.3	44.6	34.9	-	-	-
	72	100.1	5.9	68.8	58.0	47.2	36.5	-	-	92.6	6.4	66.0	55.2	44.4	33.6	-	-
	67	91.1	5.9	81.1	69.0	56.9	46.3	35.6	-	84.7	6.4	77.7	65.8	54.0	43.4	32.8	-
	62	82.2	5.9	82.2	75.2	66.6	56.0	45.5	35.0	80.1	6.4	79.8	71.6	63.5	53.2	42.8	32.5
2250	77	109.9	5.9	62.3	49.8	37.2	-	-	-	101.4	6.4	60.8	47.6	34.4	-	-	-
	72	101.7	5.9	74.1	61.7	49.4	37.1	-	-	94.4	6.4	71.3	58.9	46.6	34.2	-	-
	67	93.6	5.9	84.9	73.7	61.6	49.1	36.7	-	87.5	6.4	79.7	70.2	58.7	46.2	33.8	-
	62	86.5	5.9	85.1	80.9	73.8	61.2	48.5	35.9	82.1	6.4	80.0	77.1	70.8	58.3	45.8	33.3
	57	85.3	5.9	85.3	85.3	85.3	73.2	60.4	47.6	80.9	6.4	80.9	80.9	80.9	70.4	57.8	45.2
2625	77	110.6	5.9	68.2	52.6	36.9	-	-	-	102.2	6.4	67.3	50.6	34.0	-	-	-
	72	103.3	5.9	79.3	65.5	51.6	37.8	-	-	96.3	6.4	76.6	62.6	48.7	34.7	-	-
	67	96.0	5.9	88.0	78.4	66.3	52.0	37.7	-	90.3	6.4	85.0	74.7	63.4	49.1	34.8	-
	62	91.9	5.9	88.5	86.6	81.0	66.3	51.5	36.8	87.0	6.4	85.9	82.7	78.1	63.4	48.7	34.1
	57	89.1	5.9	89.1	89.1	89.1	80.5	65.3	50.1	86.0	6.4	86.0	86.0	86.0	77.8	62.7	47.7
3000	77	111.4	5.9	74.1	55.4	36.6	-	-	-	103.0	6.4	73.8	53.6	33.5	-	-	-
	72	104.9	5.9	84.6	69.2	53.8	38.4	-	-	98.1	6.4	81.9	66.4	50.8	35.3	-	-
	67	98.5	5.9	95.1	83.1	71.0	54.9	38.8	-	93.1	6.4	90.0	79.1	68.1	51.9	35.7	-
	62	97.3	5.9	96.3	92.3	88.3	71.4	54.5	37.6	92.0	6.4	90.6	88.2	85.4	68.6	51.7	34.8
	57	96.4	5.9	96.4	96.4	96.4	87.9	70.3	52.7	90.8	6.4	90.8	90.8	90.8	85.2	67.7	50.1
3375	72	106.6	5.9	89.9	73.0	56.0	39.1	-	-	99.9	6.4	87.2	70.1	52.9	35.8	-	-
	67	104.3	5.9	99.8	87.8	75.7	57.8	39.8	-	97.8	6.4	94.1	83.5	72.8	54.8	36.7	-
	62	102.7	5.9	100.5	98.0	95.5	76.5	57.5	38.5	96.9	6.4	94.7	93.7	92.7	73.7	54.6	35.6
	57	101.9	5.9	101.3	101.3	101.3	95.2	75.2	55.2	96.5	6.4	95.2	95.2	95.2	92.6	72.6	52.6
3750	72	112.6	5.9	95.2	76.7	58.21	39.7	-	-	104.8	6.4	92.5	73.8	55.1	36.4	-	-
	67	108.2	5.9	104.4	92.4	80.5	60.7	40.9	-	101.8	6.4	98.2	87.9	77.5	57.6	37.6	-
	62	108.0	5.9	104.7	103.7	102.7	81.6	60.5	39.4	101.0	6.4	98.4	98.4	98.4	78.8	57.6	36.4
	57	106.0	5.9	105.0	105.0	105.0	102.6	80.2	57.8	98.8	6.4	98.6	98.6	98.6	98.6	77.6	55.1

ZL08 (7.5 Ton) (Continued)

Air on Evaporator Coil		Temperature of Air on Condenser Coil															
		Total Capacity[1] (MBh)	Total Input (kW)[2]	Sensible Capacity (MBh) Return Dry Bulb (°F)						Total Capacity[1] (MBh)	Total Input (kW)[2]	Sensible Capacity (MBh) Return Dry Bulb (°F)					
CFM	WB (°F)			90	85	80	75	70	65			90	85	80	75	70	65
		115°F								125°F							
1875	77	91.9	6.8	52.2	42.2	32.2	-	-	-	83.3	7.3	50.1	39.8	29.5	-	-	-
	72	85.1	6.8	63.2	52.4	41.6	30.8	-	-	77.6	7.3	60.5	49.6	38.8	27.9	-	-
	67	78.2	6.8	74.3	62.6	51.0	40.5	30.1	-	71.8	7.3	68.8	59.5	48.1	37.7	27.3	-
	62	74.5	6.8	74.5	68.1	60.4	50.3	40.1	30.0	69.3	7.3	69.3	64.5	57.4	47.4	37.5	27.5
2250	77	92.8	6.8	59.3	45.4	31.6	-	-	-	84.3	7.3	57.7	43.2	28.8	-	-	-
	72	87.1	6.8	68.5	56.1	43.7	31.2	-	-	79.8	7.3	65.8	53.3	40.8	28.3	-	-
	67	81.4	6.8	75.6	66.8	55.7	43.3	30.9	-	75.3	7.3	72.5	63.3	52.8	40.4	28.1	-
	62	77.7	6.8	76.0	73.4	67.8	55.4	43.1	30.7	73.3	7.3	72.7	69.7	64.8	52.6	40.3	28.1
	57	76.5	6.8	76.5	76.5	76.5	67.5	55.2	42.8	72.8	7.3	72.8	72.8	72.8	64.7	52.6	40.4
2625	77	93.8	6.8	66.3	48.7	31.0	-	-	-	85.3	7.3	65.4	46.7	28.1	-	-	-
	72	89.2	6.8	73.8	59.8	45.7	31.7	-	-	82.1	7.3	71.1	57.0	42.8	28.6	-	-
	67	84.6	6.8	81.4	70.9	60.5	46.1	31.8	-	78.9	7.3	76.2	67.2	57.5	43.2	28.8	-
	62	82.2	6.8	81.6	78.7	75.2	60.6	46.0	31.3	77.3	7.3	76.4	74.8	72.3	57.7	43.2	28.6
	57	82.0	6.8	82.0	82.0	82.0	75.0	60.1	45.2	76.5	7.3	76.5	76.5	76.5	72.3	57.5	42.8
3000	77	94.7	6.8	73.4	51.9	30.4	-	-	-	86.4	7.3	73.0	50.2	27.3	-	-	-
	72	91.2	6.8	79.2	63.5	47.8	32.1	-	-	84.4	7.3	76.4	60.6	44.8	29.0	-	-
	67	87.8	6.8	84.9	75.1	65.2	48.9	32.7	-	82.4	7.3	79.8	71.1	62.3	45.9	29.6	-
	62	86.7	6.8	85.5	84.1	82.6	65.7	48.9	32.0	81.3	7.3	80.1	79.9	79.7	62.9	46.0	29.2
	57	85.5	6.8	85.5	85.5	85.5	82.5	65.1	47.6	80.3	7.3	80.3	80.3	80.3	79.8	62.5	45.1
3375	72	93.3	6.8	84.5	67.2	49.9	32.6	-	-	86.7	7.3	81.7	64.3	46.8	29.4	-	-
	67	91.3	6.8	88.5	79.2	69.9	51.7	33.5	-	85.9	7.3	82.9	74.9	67.0	48.7	30.4	-
	62	91.1	6.8	88.8	88.8	88.8	70.9	51.8	32.7	85.4	7.3	83.0	83.0	83.0	68.0	48.9	29.8
	57	90.9	6.8	89.1	89.1	89.1	89.1	70.0	50.0	84.8	7.3	83.1	83.1	83.1	83.1	67.4	47.4
3750	72	97.1	6.9	89.8	70.9	52.0	33.0	-	-	90.3	7.3	85.5	67.9	48.8	29.7	-	-
	67	95.6	6.8	92.0	83.3	74.6	54.5	34.4	-	89.4	7.3	85.7	78.8	71.7	51.5	31.2	-
	62	95.3	6.8	92.1	92.1	92.1	76.0	54.7	33.4	89.4	7.3	85.8	85.8	85.8	73.2	51.8	30.3
	57	95.0	6.8	92.2	92.2	92.2	92.2	75.0	52.4	89.3	7.3	85.9	85.9	85.9	85.9	72.4	49.8

1. These capacities are gross ratings. For net capacity, deduct the supply air blower motor heat (MBh = 3.415 x kW). Refer to the appropriate Blower Performance Table for the kW of the supply air blower motor.
2. These ratings include the condenser fan motors (total 1 kW) and the compressor motors but not the supply air blower motor.

ZL09 (8.5 Ton)

Air on Evaporator Coil		Temperature of Air on Condenser Coil															
		Total Capacity[1] (MBh)	Total Input (kW)[2]	Sensible Capacity (MBh) Return Dry Bulb (°F)						Total Capacity[1] (MBh)	Total Input (kW)[2]	Sensible Capacity (MBh) Return Dry Bulb (°F)					
CFM	WB (°F)			90	85	80	75	70	65			90	85	80	75	70	65
		75°F								85°F							
2125	77	123.4	5.7	61.3	53.9	46.6	-	-	-	118.9	6.1	58.2	50.7	43.3	-	-	-
	72	117.7	5.6	79.3	68.0	56.7	45.5	-	-	112.1	6.0	76.9	65.5	54.0	42.6	-	-
	67	112.0	5.6	97.3	82.1	66.9	57.7	45.1	-	105.3	6.0	95.6	80.2	64.8	54.4	42.3	-
	62	108.6	5.6	102.9	89.7	77.1	65.0	56.1	45.6	99.2	6.0	98.3	86.8	75.6	63.7	53.5	42.4
2550	77	124.9	5.7	66.8	56.1	45.4	-	-	-	120.0	6.1	65.0	53.8	42.6	-	-	-
	72	119.9	5.7	85.4	72.1	58.8	45.6	-	-	114.3	6.0	83.2	69.8	56.4	43.0	-	-
	67	114.9	5.6	102.8	88.1	72.3	60.5	46.0	-	108.6	6.0	97.8	85.8	70.2	57.4	43.2	-
	62	107.6	5.6	103.2	96.2	85.7	71.4	59.7	46.7	102.1	6.0	98.0	93.2	84.0	69.8	56.9	43.3
	57	106.2	5.6	106.2	104.3	99.1	86.2	73.4	60.5	98.1	6.0	98.1	98.1	97.7	84.1	70.5	56.9
2975	77	126.4	5.7	72.3	58.3	44.3	-	-	-	121.2	6.1	71.9	56.9	41.9	-	-	-
	72	122.1	5.7	91.4	76.2	60.9	45.7	-	-	116.6	6.1	89.5	74.1	58.7	43.3	-	-
	67	117.8	5.6	110.6	94.1	77.6	63.2	46.8	-	111.9	6.0	100.8	91.3	75.5	60.3	44.1	-
	62	109.6	5.6	109.6	102.6	94.2	77.8	63.3	47.8	106.6	6.0	101.1	99.5	92.3	75.9	60.3	44.3
	57	108.7	5.6	108.7	106.1	103.5	95.3	79.7	64.1	101.3	6.0	101.3	101.3	101.3	92.8	76.5	60.1
3400	77	127.9	5.8	77.7	60.4	43.1	-	-	-	122.4	6.1	78.7	59.9	41.2	-	-	-
	72	124.3	5.7	97.5	80.3	63.0	45.8	-	-	118.8	6.1	95.8	78.4	61.1	43.7	-	-
	67	120.7	5.7	117.3	100.1	82.9	66.0	47.7	-	115.1	6.0	106.0	96.9	80.9	63.3	45.0	-
	62	114.3	5.7	114.3	109.0	102.8	84.2	66.8	48.8	111.1	6.0	106.8	105.8	100.7	81.9	63.7	45.2
	57	111.2	5.7	110.8	110.8	110.8	104.4	86.0	67.6	107.0	6.0	106.9	106.9	106.9	101.5	82.4	63.3
3825	72	126.5	5.7	103.6	84.3	65.1	45.9	-	-	121.0	6.1	102.1	82.7	63.4	44.1	-	-
	67	123.6	5.7	114.1	106.1	88.3	68.7	48.5	-	118.4	6.1	112.4	102.5	86.3	66.3	45.9	-
	62	119.0	5.7	115.5	115.5	111.4	90.6	70.4	49.9	115.6	6.1	113.2	112.2	109.1	88.0	67.1	46.2
	57	116.2	5.7	115.8	115.8	115.8	113.4	92.3	71.2	113.9	6.1	113.8	113.8	113.8	110.2	88.4	66.5
4250	72	128.7	5.8	109.6	88.4	67.2	46.0	-	-	123.3	6.1	108.4	87.1	65.7	44.4	-	-
	67	126.5	5.7	121.0	112.1	93.6	71.5	49.4	-	121.7	6.1	119.0	108.0	91.6	69.2	46.8	-
	62	123.7	5.7	122.5	121.9	120.0	97.0	74.0	51.0	120.1	6.1	119.4	118.5	117.5	94.0	70.6	47.1
	57	122.8	5.7	122.8	122.8	122.8	122.5	98.6	74.7	119.5	6.1	119.5	119.5	119.5	118.8	94.3	69.8
		95°F								105°F							
2125	77	114.3	6.5	55.2	47.6	40.0	-	-	-	105.1	7.1	54.3	45.4	36.6	-	-	-
	72	106.5	6.4	74.5	62.9	51.3	39.7	-	-	98.6	7.1	71.9	60.1	48.4	36.6	-	-
	67	98.7	6.4	93.9	78.3	62.7	51.1	39.5	-	92.2	7.0	89.5	74.9	60.2	48.4	36.5	-
	62	95.1	6.4	94.5	83.9	74.1	62.4	50.8	39.2	90.4	7.0	89.6	80.3	72.0	60.1	48.2	36.3
2550	77	115.2	6.5	63.3	51.5	39.7	-	-	-	106.5	7.1	63.0	49.7	36.4	-	-	-
	72	108.8	6.4	81.0	67.5	53.9	40.4	-	-	101.1	7.1	78.4	64.6	50.9	37.1	-	-
	67	102.3	6.4	95.5	83.4	68.1	54.3	40.4	-	95.8	7.1	91.4	79.5	65.3	51.3	37.3	-
	62	99.3	6.4	96.0	90.1	82.2	68.2	54.1	40.0	93.4	7.0	92.2	86.1	79.8	65.6	51.3	37.0
	57	96.3	6.4	96.3	96.3	96.3	82.1	67.7	53.4	92.4	7.0	92.4	92.4	92.4	79.8	65.3	50.7
2975	77	116.1	6.5	71.5	55.5	39.5	-	-	-	107.9	7.1	71.8	54.0	36.2	-	-	-
	72	111.0	6.4	87.5	72.0	56.5	41.0	-	-	103.7	7.1	84.8	69.1	53.4	37.6	-	-
	67	106.0	6.4	102.0	88.5	73.5	57.4	41.4	-	99.4	7.1	95.8	84.2	70.5	54.3	38.1	-
	62	103.6	6.4	102.3	96.4	90.4	73.9	57.3	40.8	97.5	7.0	96.2	91.9	87.6	71.0	54.4	37.7
	57	102.8	6.4	102.8	102.8	102.8	90.3	73.3	56.2	96.5	7.0	96.5	96.5	96.5	87.7	70.6	53.5
3400	77	117.0	6.5	79.6	59.5	39.3	-	-	-	109.4	7.1	80.5	58.3	36.0	-	-	-
	72	113.3	6.4	94.1	76.6	59.1	41.6	-	-	106.2	7.1	91.3	73.6	55.8	38.1	-	-
	67	109.6	6.4	105.6	93.7	78.9	60.6	42.4	-	103.0	7.1	99.9	88.9	75.7	57.3	38.9	-
	62	107.9	6.4	105.7	102.6	98.6	79.6	60.6	41.6	102.0	7.1	100.1	97.8	95.5	76.4	57.4	38.4
	57	106.1	6.4	105.8	105.8	105.8	98.6	78.8	59.1	100.9	7.0	100.9	100.9	100.9	95.6	76.0	56.3
3825	72	115.5	6.5	100.6	81.1	61.7	42.2	-	-	108.7	7.1	97.7	78.0	58.3	38.6	-	-
	67	113.2	6.4	109.4	98.8	84.3	63.8	43.3	-	106.6	7.1	103.6	93.5	80.8	60.3	39.7	-
	62	112.1	6.4	110.0	108.9	106.8	85.4	63.9	42.4	105.6	7.1	104.0	103.6	103.3	81.9	60.5	39.1
	57	111.0	6.4	110.4	110.4	110.4	106.9	84.4	61.9	104.7	7.1	104.7	104.7	104.7	103.5	81.3	59.1
4250	72	117.8	6.5	107.1	85.7	64.3	42.9	-	-	111.2	7.1	104.2	82.5	60.8	39.1	-	-
	67	116.9	6.5	115.5	104.0	89.6	67.0	44.3	-	110.3	7.1	106.9	98.2	86.0	63.2	40.5	-
	62	116.4	6.5	115.6	115.1	115.0	91.1	67.1	43.2	109.7	7.1	107.8	107.8	107.8	87.3	63.6	39.8
	57	115.9	6.5	115.7	115.7	115.7	115.2	90.0	64.8	109.2	7.1	109.2	109.2	109.2	109.2	86.7	61.9

ZL09 (8.5 Ton) (Continued)

Air on Evaporator Coil		Temperature of Air on Condenser Coil															
		Total Capacity[1] (MBh)	Total Input (kW)[2]	Sensible Capacity (MBh) Return Dry Bulb (°F)						Total Capacity[1] (MBh)	Total Input (kW)[2]	Sensible Capacity (MBh) Return Dry Bulb (°F)					
CFM	WB (°F)			90	85	80	75	70	65			90	85	80	75	70	65
		115°F								125°F							
2125	77	95.8	7.7	53.4	43.3	33.2	-	-	-	86.6	8.3	52.5	41.2	29.8	-	-	-
	72	90.7	7.7	69.3	57.4	45.4	33.5	-	-	82.9	8.3	66.7	54.6	42.5	30.4	-	-
	67	86.3	7.7	83.5	71.4	57.7	45.6	33.6	-	79.1	8.3	77.5	68.0	55.2	42.9	30.7	-
	62	84.1	7.7	84.1	76.6	70.0	57.8	45.6	33.5	77.9	8.3	77.9	73.0	67.9	55.5	43.0	30.6
2550	77	97.8	7.7	62.7	47.9	33.0	-	-	-	89.1	8.3	62.4	46.1	29.7	-	-	-
	72	93.5	7.7	75.7	61.8	47.8	33.9	-	-	85.9	8.3	73.0	58.9	44.8	30.6	-	-
	67	89.2	7.7	85.0	75.6	62.6	48.4	34.2	-	82.7	8.3	79.8	71.7	59.9	45.5	31.1	-
	62	87.5	7.7	85.4	82.1	77.4	63.0	48.5	34.1	81.6	8.3	80.1	78.0	75.0	60.3	45.7	31.1
	57	85.7	7.7	85.6	85.6	85.6	77.5	62.8	48.1	80.4	8.3	80.4	80.4	80.4	75.2	60.3	45.5
2975	77	99.8	7.7	72.1	52.5	32.9	-	-	-	91.6	8.3	72.4	51.0	29.6	-	-	-
	72	96.3	7.7	82.1	66.1	50.2	34.3	-	-	89.0	8.3	79.4	63.2	47.1	30.9	-	-
	67	92.8	7.7	89.0	79.8	67.5	51.2	34.9	-	86.3	8.3	83.6	75.5	64.5	48.1	31.6	-
	62	91.4	7.7	89.4	87.5	84.8	68.1	51.4	34.7	85.3	8.3	84.1	83.0	82.0	65.2	48.4	31.6
	57	89.9	7.7	89.9	89.9	89.9	85.0	67.9	50.8	84.3	8.3	84.2	84.2	84.2	82.4	65.3	48.1
3400	77	101.8	7.7	81.4	57.1	32.7	-	-	-	94.1	8.3	82.3	55.9	29.5	-	-	-
	72	99.1	7.7	88.5	70.5	52.6	34.6	-	-	92.0	8.3	85.7	67.5	49.3	31.2	-	-
	67	96.4	7.7	93.3	84.0	72.4	54.0	35.5	-	89.9	8.3	87.6	79.2	69.2	50.6	32.0	-
	62	95.3	7.7	93.6	92.9	92.3	73.3	54.3	35.3	89.0	8.3	87.8	87.8	87.8	70.1	51.1	32.1
	57	94.1	7.7	94.1	94.1	94.1	92.6	73.1	53.5	88.1	8.3	88.1	88.1	88.1	88.1	70.2	50.8
3825	72	102.4	7.7	94.9	74.9	55.0	35.0	-	-	95.1	8.3	91.0	71.8	51.6	31.4	-	-
	67	100.1	7.7	96.7	88.2	77.4	56.7	36.1	-	93.5	8.3	91.4	82.9	73.9	53.2	32.5	-
	62	99.2	7.7	97.0	97.0	97.0	78.4	57.2	35.9	92.7	8.3	91.7	91.7	91.7	75.0	53.8	32.6
	57	98.3	7.7	98.2	98.2	98.2	98.2	78.2	56.3	91.9	8.3	91.9	91.9	91.9	91.9	75.1	53.4
4250	72	104.7	7.7	101.3	79.3	57.4	35.4	-	-	98.1	8.3	94.1	76.2	53.9	31.7	-	-
	67	103.7	7.7	102.0	92.4	82.3	59.5	36.7	-	97.1	8.3	94.7	86.7	78.6	55.8	33.0	-
	62	103.1	7.7	102.1	102.1	102.1	83.6	60.0	36.5	96.4	8.3	95.4	95.4	95.4	79.9	56.5	33.1
	57	102.5	7.7	102.5	102.5	102.5	102.5	83.3	59.0	95.8	8.3	95.8	95.8	95.8	95.8	80.0	56.1

1. These capacities are gross ratings. For net capacity, deduct the supply air blower motor heat (MBh = 3.415 x kW). Refer to the appropriate Blower Performance Table for the kW of the supply air blower motor.
2. These ratings include the condenser fan motors (total 1 kW) and the compressor motors but not the supply air blower motor.

ZL12 (10 Ton)

Air on Evaporator Coil		Temperature of Air on Condenser Coil															
		Total Capacity[1] (MBh)	Total Input (kW)[2]	Sensible Capacity (MBh) Return Dry Bulb (°F)						Total Capacity[1] (MBh)	Total Input (kW)[2]	Sensible Capacity (MBh) Return Dry Bulb (°F)					
CFM	WB (°F)			90	85	80	75	70	65			90	85	80	75	70	65
		75°F								85°F							
2500	77	153.2	7.2	76.1	64.3	52.4	-	-	-	145.4	7.6	74.7	62.6	50.5	-	-	-
	72	139.3	7.1	93.0	79.6	66.1	52.7	-	-	133.8	7.5	92.5	78.4	64.3	50.2	-	-
	67	125.4	7.0	109.8	94.8	79.9	65.4	52.2	-	122.2	7.4	110.2	94.1	78.0	63.5	49.5	-
	62	117.3	7.0	117.3	105.8	93.6	75.2	65.2	51.0	117.7	7.4	116.9	104.3	91.7	75.3	63.0	48.6
3000	77	155.1	7.2	85.6	68.9	52.2	-	-	-	146.7	7.6	84.1	67.0	50.0	-	-	-
	72	143.1	7.1	101.6	85.5	69.3	53.2	-	-	136.8	7.5	100.4	83.8	67.2	50.6	-	-
	67	131.1	7.0	117.6	102.0	86.5	69.5	53.4	-	126.9	7.4	116.7	100.6	84.4	67.3	50.7	-
	62	124.4	7.0	119.1	113.8	103.6	83.3	69.8	52.9	123.2	7.4	119.2	111.8	101.6	82.8	67.4	50.2
	57	119.6	7.0	119.6	119.6	119.6	103.5	86.1	68.8	119.4	7.4	119.4	119.4	118.8	101.4	84.0	66.6
3500	77	157.0	7.2	95.1	73.5	52.0	-	-	-	148.0	7.7	93.4	71.4	49.5	-	-	-
	72	146.9	7.1	110.2	91.4	72.5	53.7	-	-	139.8	7.6	108.3	89.2	70.2	51.1	-	-
	67	136.7	7.0	125.3	109.2	93.1	73.5	54.6	-	131.7	7.5	123.3	107.1	90.9	71.2	51.9	-
	62	131.4	7.0	126.0	121.9	113.6	91.5	74.4	54.8	128.7	7.5	125.2	119.3	111.5	90.4	71.7	51.8
	57	126.2	7.0	126.2	126.2	126.2	114.2	94.2	74.2	125.7	7.5	125.7	125.7	125.7	111.9	91.6	71.3
4000	77	158.9	7.2	104.6	78.2	51.8	-	-	-	149.3	7.7	102.7	75.8	48.9	-	-	-
	72	150.6	7.1	118.8	97.3	75.7	54.2	-	-	142.9	7.6	116.3	94.7	73.1	51.5	-	-
	67	142.3	7.0	133.0	116.4	99.7	77.5	55.8	-	136.4	7.5	129.8	113.6	97.3	75.0	53.0	-
	62	138.5	7.0	134.2	129.9	123.6	99.6	79.0	56.7	134.1	7.5	131.8	126.7	121.5	97.9	76.1	53.4
	57	134.7	7.0	134.7	134.7	134.7	124.9	102.2	79.5	131.9	7.5	131.9	131.9	131.9	122.4	99.1	75.9
4500	72	154.4	7.1	127.4	103.2	78.9	54.7	-	-	145.9	7.6	124.2	100.1	76.1	52.0	-	-
	67	148.0	7.1	140.8	123.5	106.3	81.5	57.0	-	141.1	7.5	136.4	120.0	103.7	78.9	54.2	-
	62	145.6	7.1	142.3	138.0	133.6	107.8	83.6	58.6	139.6	7.5	137.1	134.2	131.4	105.5	80.4	55.0
	57	143.2	7.1	143.2	143.2	143.2	135.6	110.2	84.8	138.1	7.5	138.0	138.0	138.0	132.9	106.7	80.5
5000	72	158.2	7.2	136.0	109.1	82.1	55.2	-	-	148.9	7.6	132.1	105.6	79.0	52.5	-	-
	67	153.6	7.1	148.5	130.7	112.9	85.5	58.2	-	145.8	7.5	142.9	126.5	110.1	82.7	55.4	-
	62	152.6	7.1	149.6	146.0	143.6	115.9	88.2	60.5	145.1	7.5	143.0	141.7	141.3	113.0	84.8	56.6
	57	151.6	7.1	150.2	150.2	150.2	146.3	118.2	90.1	144.3	7.5	143.2	143.2	143.2	143.2	114.2	85.2
		95°F								105°F							
2500	77	137.5	8.1	73.3	61.0	48.7	-	-	-	128.1	8.7	71.4	58.4	45.5	-	-	-
	72	128.3	8.0	92.0	77.2	62.4	47.6	-	-	119.3	8.6	87.8	73.2	58.6	44.1	-	-
	67	119.0	7.9	110.6	93.4	76.1	61.5	46.8	-	110.5	8.5	104.2	88.0	71.8	57.5	43.2	-
	62	118.1	7.9	115.9	102.9	89.8	75.3	60.8	46.3	110.2	8.5	107.4	96.2	85.0	71.0	56.9	42.9
3000	77	138.3	8.1	82.5	65.2	47.8	-	-	-	128.9	8.7	80.4	62.2	44.1	-	-	-
	72	130.5	8.0	99.2	82.2	65.1	48.0	-	-	121.7	8.6	94.7	77.9	61.1	44.2	-	-
	67	122.8	7.9	115.9	99.2	82.4	65.2	48.0	-	114.4	8.5	109.0	93.5	78.0	61.1	44.2	-
	62	122.0	7.9	119.9	109.8	99.7	82.3	64.9	47.6	114.1	8.5	111.4	103.2	95.0	78.0	61.0	44.0
	57	121.1	7.9	121.1	120.4	116.9	99.4	81.9	64.4	113.9	8.5	113.8	112.9	111.9	94.9	77.8	60.7
3500	77	139.0	8.1	91.6	69.3	47.0	-	-	-	129.7	8.7	89.3	66.1	42.8	-	-	-
	72	132.8	8.0	106.5	87.1	67.8	48.5	-	-	124.0	8.6	101.6	82.5	63.5	44.4	-	-
	67	126.6	7.9	121.3	105.0	88.6	68.9	49.1	-	118.3	8.5	113.9	99.0	84.2	64.7	45.2	-
	62	125.9	7.9	123.9	116.7	109.5	89.3	69.0	48.8	118.1	8.5	115.4	110.2	104.9	85.0	65.1	45.2
	57	125.1	7.9	125.1	125.1	125.1	109.7	89.0	68.4	117.8	8.5	117.0	117.0	117.0	105.3	85.0	64.6
4000	77	139.7	8.1	100.8	73.5	46.1	-	-	-	130.5	8.7	98.3	69.9	41.4	-	-	-
	72	135.1	8.0	113.7	92.1	70.5	48.9	-	-	126.4	8.6	108.5	87.2	65.9	44.6	-	-
	67	130.5	7.9	126.6	110.8	94.9	72.6	50.2	-	122.2	8.6	118.7	104.6	90.4	68.3	46.2	-
	62	129.8	7.9	127.9	123.6	119.3	96.2	73.2	50.1	122.0	8.6	119.4	117.2	114.9	92.0	69.2	46.3
	57	129.1	7.9	129.1	129.1	129.1	119.9	96.1	72.3	121.8	8.5	120.2	120.2	120.2	115.8	92.1	68.4
4500	72	137.4	8.0	121.0	97.1	73.2	49.3	-	-	128.7	8.6	115.4	91.9	68.3	44.8	-	-
	67	134.3	7.9	131.9	116.5	101.2	76.3	51.4	-	126.1	8.6	123.5	110.1	96.6	71.9	47.2	-
	62	133.7	7.9	131.9	130.5	129.1	103.2	77.3	51.4	125.9	8.6	124.7	124.2	124.7	99.1	73.2	47.4
	57	133.0	7.9	131.9	131.9	131.9	130.1	103.2	76.2	125.7	8.6	125.3	125.3	125.3	125.3	99.2	72.3
5000	72	139.6	8.0	128.2	102.1	75.9	49.8	-	-	131.1	8.6	122.3	96.5	70.8	45.0	-	-
	67	138.1	8.0	136.0	122.3	107.4	80.0	52.5	-	130.0	8.6	127.6	115.6	102.8	75.5	48.2	-
	62	137.6	8.0	136.4	136.4	136.4	110.1	81.4	52.6	129.8	8.6	128.4	128.4	128.4	106.1	77.3	48.6
	57	137.0	8.0	136.9	136.9	136.9	136.9	110.3	80.2	129.7	8.6	129.5	129.5	129.5	129.5	106.4	76.1

ZL12 (10 Ton) (Continued)

Air on Evaporator Coil		Temperature of Air on Condenser Coil															
		Total Capacity[1] (MBh)	Total Input (kW)[2]	Sensible Capacity (MBh)						Total Capacity[1] (MBh)	Total Input (kW)[2]	Sensible Capacity (MBh)					
CFM	WB (°F)			Return Dry Bulb (°F)								Return Dry Bulb (°F)					
				90	85	80	75	70	65			90	85	80	75	70	65
		115°F								125°F							
2500	77	118.7	9.3	69.5	55.8	42.2	-	-	-	109.2	9.8	67.5	53.3	39.0	-	-	-
	72	110.3	9.2	83.6	69.3	54.9	40.5	-	-	101.4	9.8	79.5	65.3	51.1	37.0	-	-
	67	102.6	9.1	97.8	82.7	67.6	53.6	39.6	-	94.5	9.7	91.4	77.3	63.3	49.6	36.0	-
	62	102.3	9.1	99.0	89.6	80.2	66.6	53.1	39.5	93.5	9.7	91.9	83.0	75.4	62.3	49.2	36.1
3000	77	119.5	9.3	78.3	59.3	40.4	-	-	-	110.2	9.8	76.1	56.4	36.7	-	-	-
	72	112.8	9.2	90.2	73.6	57.0	40.5	-	-	103.9	9.8	85.7	69.3	53.0	36.7	-	-
	67	107.2	9.1	102.1	87.9	73.7	57.1	40.5	-	99.3	9.8	95.2	82.3	69.3	53.0	36.7	-
	62	106.8	9.1	103.0	96.6	90.3	73.7	57.1	40.5	99.0	9.8	95.6	90.1	85.6	69.4	53.2	36.9
	57	106.6	9.1	103.8	103.8	103.8	90.3	73.7	57.1	98.8	9.8	95.9	95.9	95.9	85.8	69.6	53.4
3500	77	120.4	9.3	87.1	62.8	38.5	-	-	-	111.1	9.9	84.8	59.5	34.3	-	-	-
	72	115.2	9.2	96.8	78.0	59.2	40.4	-	-	106.4	9.8	91.9	73.4	54.9	36.3	-	-
	67	110.5	9.2	106.5	93.1	79.8	60.6	41.4	-	103.9	9.8	99.9	87.2	75.4	56.4	37.5	-
	62	110.3	9.2	107.0	103.7	100.4	80.8	61.1	41.5	103.5	9.8	100.5	97.2	95.9	76.5	57.2	37.8
	57	110.0	9.1	107.5	107.5	107.5	101.0	80.9	60.8	103.3	9.8	101.2	101.2	101.2	96.6	76.9	57.1
4000	77	121.3	9.3	95.8	66.3	36.7	-	-	-	112.0	9.9	93.4	62.7	32.0	-	-	-
	72	117.6	9.2	103.3	82.3	61.3	40.3	-	-	108.9	9.9	98.1	77.4	56.7	36.0	-	-
	67	115.0	9.2	110.8	98.4	85.9	64.1	42.2	-	108.2	9.8	102.9	92.2	81.4	59.8	38.3	-
	62	114.7	9.2	111.0	110.8	110.5	87.9	65.2	42.5	107.6	9.8	103.3	103.3	103.3	83.7	61.2	38.7
	57	114.5	9.2	111.2	111.2	111.2	111.2	88.1	64.6	107.2	9.8	104.2	104.2	104.2	104.2	84.1	60.7
4500	72	120.0	9.3	109.9	86.7	63.5	40.2	-	-	113.4	9.9	104.3	81.5	58.6	35.7	-	-
	67	118.6	9.2	115.1	103.6	92.0	67.6	43.1	-	111.7	9.9	106.7	97.1	87.5	63.3	39.0	-
	62	118.5	9.2	115.5	115.5	115.5	94.9	69.2	43.5	111.4	9.9	107.5	107.5	107.5	90.8	65.2	39.6
	57	118.2	9.2	116.2	116.2	116.2	116.2	95.3	68.3	111.1	9.8	108.2	108.2	108.2	108.2	91.4	64.4
5000	72	123.1	9.3	116.4	91.0	65.6	40.2	-	-	115.9	9.9	110.6	85.5	60.4	35.4	-	-
	67	122.3	9.3	118.5	108.8	98.2	71.1	44.0	-	115.6	9.9	112.7	102.0	93.6	66.7	39.8	-
	62	122.1	9.3	119.0	119.0	119.0	102.0	73.3	44.5	115.4	9.9	113.1	113.1	113.1	97.9	69.2	40.5
	57	121.9	9.2	119.5	119.5	119.5	119.5	102.5	72.1	115.0	9.9	113.1	113.1	113.1	113.1	98.6	68.0

1. These capacities are gross ratings. For net capacity, deduct the supply air blower motor heat (MBh = 3.415 x kW). Refer to the appropriate Blower Performance Table for the kW of the supply air blower motor.
2. These ratings include the condenser fan motors (total 1 kW) and the compressor motors but not the supply air blower motor.

ZL14 (12.5 Ton)

Air on Evaporator Coil		Temperature of Air on Condenser Coil															
		Total Capacity[1] (MBh)	Total Input (kW)[2]	Sensible Capacity (MBh) Return Dry Bulb (°F)						Total Capacity[1] (MBh)	Total Input (kW)[2]	Sensible Capacity (MBh) Return Dry Bulb (°F)					
CFM	WB (°F)			90	85	80	75	70	65			90	85	80	75	70	65
		75°F								85°F							
3200	77	182.4	8.3	93.6	76.6	59.5	-	-	-	170.5	8.8	88.2	73.1	58.1	-	-	-
	72	166.6	8.2	113.7	96.1	78.4	60.8	-	-	158.2	8.7	111.0	93.4	75.8	58.3	-	-
	67	150.8	8.1	133.8	115.6	97.3	78.2	61.7	-	146.0	8.7	133.7	113.7	93.6	75.5	58.7	-
	62	147.2	8.1	142.3	129.3	116.2	92.1	80.2	62.2	142.1	8.6	137.0	124.2	111.4	91.0	76.7	59.3
3750	77	182.9	8.4	104.3	82.5	60.7	-	-	-	171.2	8.8	99.3	78.5	57.8	-	-	-
	72	169.8	8.2	122.6	102.5	82.4	62.3	-	-	161.1	8.8	119.3	99.2	79.1	59.0	-	-
	67	156.7	8.1	140.9	122.5	104.1	82.7	63.3	-	151.1	8.7	139.4	119.9	100.3	79.6	59.8	-
	62	153.8	8.1	147.7	136.7	125.8	100.2	84.4	63.7	148.3	8.7	141.9	131.7	121.6	98.7	80.7	60.3
	57	150.9	8.1	150.9	150.9	147.5	126.5	105.5	84.5	145.5	8.7	144.4	143.6	142.8	122.2	101.7	81.1
4300	77	183.4	8.4	115.0	88.5	61.9	-	-	-	171.9	8.8	110.3	84.0	57.6	-	-	-
	72	173.0	8.3	131.5	108.9	86.4	63.9	-	-	164.1	8.8	127.7	105.0	82.3	59.7	-	-
	67	162.6	8.2	147.9	129.4	110.9	87.2	65.0	-	156.2	8.7	145.1	126.1	107.1	83.6	60.9	-
	62	160.4	8.1	153.0	144.2	135.4	108.3	88.6	65.2	154.5	8.7	146.7	139.3	131.8	106.4	84.8	61.3
	57	158.3	8.1	158.1	158.1	156.6	136.1	112.3	88.5	152.9	8.7	148.4	148.4	148.4	132.6	108.7	84.8
4900	77	183.9	8.4	125.7	94.4	63.1	-	-	-	172.7	8.9	121.3	89.4	57.4	-	-	-
	72	176.2	8.3	140.3	115.4	90.4	65.4	-	-	167.0	8.8	136.0	110.8	85.6	60.4	-	-
	67	168.4	8.2	154.9	136.3	117.7	91.6	66.6	-	161.3	8.8	150.7	132.3	113.8	87.6	62.0	-
	62	167.1	8.2	158.4	151.7	144.9	116.4	92.8	66.7	160.7	8.7	151.6	146.8	142.0	114.2	88.8	62.3
	57	165.7	8.2	161.8	161.8	161.8	145.6	119.0	92.4	160.2	8.7	152.5	152.5	152.5	142.9	115.7	88.4
5400	72	179.3	8.3	149.2	121.8	94.4	66.9	-	-	169.9	8.8	144.4	116.6	88.8	61.1	-	-
	67	174.3	8.2	162.0	143.2	124.4	96.1	68.3	-	167.7	8.8	156.4	138.5	120.5	91.7	63.1	-
	62	173.7	8.2	163.8	159.1	154.5	124.5	97.0	68.3	167.0	8.8	156.5	154.3	152.2	121.9	92.9	63.2
	57	173.1	8.2	165.5	165.5	165.5	155.2	125.7	96.3	166.8	8.8	156.6	156.6	156.6	153.3	122.7	92.1
6000	72	182.5	8.3	158.1	128.2	98.4	68.5	-	-	172.8	8.9	152.8	122.4	92.1	61.7	-	-
	67	180.4	8.3	169.0	150.1	131.2	100.6	69.9	-	172.1	8.8	162.1	144.7	127.2	95.7	64.2	-
	62	180.3	8.3	169.1	166.6	164.1	132.6	101.2	69.8	171.9	8.8	162.3	162.3	162.3	129.7	96.9	64.2
	57	180.1	8.3	169.3	169.3	169.3	164.7	132.5	100.3	171.7	8.8	162.4	162.4	162.4	162.4	129.7	95.8
		95°F								105°F							
3200	77	158.5	9.3	82.8	69.7	56.6	-	-	-	146.5	9.9	83.7	68.1	52.6	-	-	-
	72	149.8	9.2	108.2	90.7	73.3	55.8	-	-	139.4	9.9	104.5	87.1	69.6	52.1	-	-
	67	141.1	9.2	133.6	111.7	89.9	72.8	55.7	-	132.4	9.9	125.4	106.0	86.6	69.2	51.8	-
	62	137.0	9.2	134.4	119.1	106.5	89.8	73.1	56.4	129.7	9.9	126.5	113.9	103.7	86.3	69.0	51.6
3750	77	159.5	9.3	94.2	74.6	55.0	-	-	-	147.8	10.0	93.9	72.2	50.6	-	-	-
	72	152.5	9.3	116.0	95.9	75.8	55.6	-	-	142.1	10.0	111.6	91.6	71.6	51.5	-	-
	67	145.4	9.3	137.2	117.2	96.6	76.4	56.3	-	136.4	9.9	129.3	110.9	92.6	72.3	52.1	-
	62	142.8	9.2	137.8	126.7	117.3	97.2	77.0	56.9	134.7	9.9	129.5	120.8	113.6	93.1	72.7	52.3
	57	140.1	9.2	138.6	136.2	138.1	118.0	97.8	77.6	133.0	9.9	129.6	129.6	129.6	114.0	93.4	72.8
4300	77	160.5	9.3	105.6	79.5	53.3	-	-	-	149.1	10.0	104.2	76.4	48.6	-	-	-
	72	155.1	9.3	123.9	101.1	78.3	55.5	-	-	144.8	10.0	118.7	96.1	73.5	50.9	-	-
	67	149.8	9.3	140.1	122.7	103.2	80.0	56.8	-	140.5	10.0	133.3	115.9	98.5	75.4	52.4	-
	62	148.6	9.3	143.2	134.3	128.2	104.6	80.9	57.3	139.8	10.0	133.4	127.7	123.4	99.9	76.5	53.0
	57	147.4	9.2	145.6	145.6	145.6	129.1	105.1	81.1	139.1	9.9	133.6	133.6	133.6	124.5	100.6	76.7
4900	77	161.4	9.4	117.0	84.3	51.7	-	-	-	150.4	10.0	114.4	80.5	46.6	-	-	-
	72	157.8	9.3	131.7	106.3	80.8	55.3	-	-	147.5	10.0	125.8	100.6	75.5	50.3	-	-
	67	154.5	9.3	145.1	128.2	109.9	83.6	57.4	-	144.8	10.0	136.0	120.8	104.4	78.5	52.7	-
	62	154.4	9.3	147.6	141.9	139.0	111.9	84.9	57.8	144.6	10.0	137.0	134.7	133.3	106.8	80.2	53.7
	57	154.3	9.3	150.5	150.5	150.5	140.2	112.4	84.5	144.5	10.0	137.3	137.3	137.3	135.0	107.8	80.6
5400	72	161.1	9.4	139.6	111.4	83.3	55.2	-	-	150.2	10.0	132.9	105.2	77.4	49.7	-	-
	67	160.5	9.4	150.2	133.7	116.6	87.2	57.9	-	149.8	10.0	140.0	125.7	110.3	81.6	53.0	-
	62	160.2	9.3	150.6	149.5	149.8	119.3	88.8	58.2	149.7	10.0	141.1	141.1	141.1	113.6	84.0	54.4
	57	160.1	9.3	150.9	150.9	150.9	150.9	119.6	87.9	149.3	10.0	141.2	141.2	141.2	141.2	115.0	84.5
6000	72	168.2	9.4	147.4	116.6	85.8	55.0	-	-	154.8	10.0	140.0	109.7	79.4	49.1	-	-
	67	166.5	9.4	153.4	139.2	123.2	90.8	58.4	-	153.8	10.0	142.3	130.6	116.2	84.7	53.2	-
	62	166.0	9.4	155.2	155.2	155.2	126.7	92.7	58.7	153.5	10.0	144.0	144.0	144.0	120.4	87.7	55.1
	57	165.5	9.3	156.5	156.5	156.5	156.5	126.9	91.3	153.3	10.0	144.2	144.2	144.2	144.2	122.2	88.4

ZL14 (12.5 Ton) (Continued)

Air on Evaporator Coil		Temperature of Air on Condenser Coil															
		Total Capacity[1] (MBh)	Total Input (kW)[2]	Sensible Capacity (MBh) Return Dry Bulb (°F)						Total Capacity[1] (MBh)	Total Input (kW)[2]	Sensible Capacity (MBh) Return Dry Bulb (°F)					
CFM	WB (°F)			90	85	80	75	70	65			90	85	80	75	70	65
		115°F								125°F							
3200	77	134.4	10.6	84.5	66.5	48.5	-	-	-	122.4	11.3	85.4	64.9	44.4	-	-	-
	72	129.0	10.6	100.9	83.4	65.9	48.5	-	-	118.7	11.3	97.3	79.8	62.3	44.8	-	-
	67	123.6	10.6	117.3	100.3	83.4	65.7	47.9	-	115.3	11.3	109.1	94.6	80.2	62.1	44.0	-
	62	122.4	10.6	117.4	108.6	100.9	82.9	64.8	46.8	115.1	11.3	109.2	103.4	98.1	79.4	60.7	42.0
3750	77	136.1	10.7	93.7	69.9	46.1	-	-	-	124.4	11.3	93.4	67.5	41.7	-	-	-
	72	131.8	10.6	107.2	87.3	67.3	47.4	-	-	121.4	11.3	102.8	83.0	63.1	43.3	-	-
	67	127.4	10.6	119.8	104.7	88.6	68.3	47.9	-	118.4	11.3	112.3	98.4	84.6	64.2	43.8	-
	62	126.7	10.6	120.0	114.9	109.8	89.1	68.4	47.8	118.2	11.3	112.5	109.0	106.0	85.1	64.1	43.2
	57	125.9	10.6	120.9	120.9	120.9	110.0	88.9	67.9	118.1	11.3	112.6	112.6	112.6	105.9	84.5	63.0
4300	77	137.7	10.7	102.8	73.3	43.8	-	-	-	126.4	11.3	101.4	70.2	39.0	-	-	-
	72	134.5	10.6	113.6	91.2	68.8	46.3	-	-	124.2	11.3	108.4	86.2	64.0	41.8	-	-
	67	131.2	10.6	123.6	109.0	93.7	70.8	48.0	-	122.4	11.3	115.4	102.2	89.0	66.3	43.6	-
	62	131.0	10.6	124.4	121.2	118.7	95.3	72.0	48.7	122.2	11.3	115.6	114.6	113.9	90.7	67.5	44.3
	57	130.7	10.6	124.6	124.6	124.6	119.8	96.0	72.2	121.9	11.3	115.9	115.9	115.9	115.2	91.5	67.8
4900	77	139.4	10.7	111.9	76.7	41.4	-	-	-	128.3	11.3	109.3	72.8	36.3	-	-	-
	72	137.2	10.7	119.9	95.0	70.2	45.3	-	-	126.9	11.3	114.0	89.4	64.8	40.3	-	-
	67	135.4	10.6	127.2	113.4	98.9	73.4	48.0	-	125.9	11.3	118.3	106.0	93.4	68.3	43.3	-
	62	135.3	10.6	127.4	127.4	127.4	101.6	75.6	49.6	125.7	11.3	118.4	118.4	118.4	96.4	71.0	45.5
	57	135.1	10.6	127.5	127.5	127.5	127.5	103.2	76.6	125.5	11.3	118.6	118.6	118.6	118.6	98.6	72.7
5400	72	139.9	10.7	126.2	98.9	71.6	44.2	-	-	129.6	11.3	119.5	92.6	65.7	38.8	-	-
	67	138.8	10.7	130.8	117.7	104.0	76.0	48.0	-	129.4	11.3	121.7	109.8	97.7	70.4	43.1	-
	62	138.5	10.7	131.1	131.1	131.1	107.8	79.2	50.5	129.2	11.3	121.9	121.9	121.9	102.1	74.4	46.7
	57	138.4	10.7	131.3	131.3	131.3	131.3	110.3	81.0	129.1	11.3	122.0	122.0	122.0	122.0	105.6	77.5
6000	72	145.1	10.7	132.6	102.8	73.0	43.2	-	-	132.9	11.3	125.1	95.8	66.5	37.3	-	-
	67	144.2	10.7	135.0	122.1	109.2	78.6	48.1	-	132.7	11.3	125.3	113.6	102.1	72.5	42.9	-
	62	143.8	10.7	135.8	135.8	135.8	114.1	82.8	51.4	132.5	11.3	125.4	125.4	125.4	107.8	77.8	47.8
	57	143.5	10.7	136.0	136.0	136.0	136.0	117.4	85.4	132.2	11.3	125.5	125.5	125.5	125.5	112.7	82.4

1. These capacities are gross ratings. For net capacity, deduct the supply air blower motor heat (MBh = 3.415 x kW). Refer to the appropriate Blower Performance Table for the kW of the supply air blower motor.
2. These ratings include the condenser fan motors (total 1 kW) and the compressor motors but not the supply air blower motor.

Drive Selection

1. Determine side or bottom supply duct Application.
2. Determine desired airflow.
3. Calculate or measure the amount of external static pressure.
   - Add or deduct any additional static resistance from “Additional Static Resistance Table”.
4. Using the operating point determined from steps 1, 2 & 3, locate this point on the appropriate supply air blower performance table. (Linear interpolation may be necessary.)
5. Noting the RPM and BHP from step 4, locate the appropriate motor and, or drive on the RPM selection table.
6. Review the BHP compared to the motor options available. Select the appropriate motor and, or drive.
7. Review the RPM range for the motor options available. Select the appropriate drive if multiple drives are available for the chosen motor.
8. Determine turns open to obtain the desired operation point.

Example

1. 3200 SCFM, Bottom Supply Duct application
2. 1.8 IWG
3. Using the airflow performance table below, the following data point was located: 1071 RPM & 2.52 BHP.
4. Using the RPM selection table below, Model ZY and Size 08 (7.5 Tons) is found.
5. 2.52 BHP exceeds the maximum continuous BHP rating of the 2.4 HP motor. The 3.7 HP motor is required.
6. 1071 RPM is within the range of the 3.7 HP motor.
7. Using the 3.7-HP motor and High-Static drive, 0.5 turns open will achieve the required 1071 RPM.

Airflow Performance

Example Supply Air Blower Performance
ZY08 (7.5 Ton) Bottom Duct

CFM	Available External Static, IWG																			
	0.2		0.4		0.6		0.8		1.0		1.2		1.4		1.6		1.8		2.0	
	RPM	BHP	RPM	BHP	RPM	BHP	RPM	BHP	RPM	BHP	RPM	BHP	RPM	BHP	RPM	BHP	RPM	BHP	RPM	BHP
2250	556	0.45	621	0.65	683	0.83	742	1.00	798	1.18	852	1.34	904	1.51	954	1.69	1003	1.87	1050	2.06
2400	567	0.53	632	0.73	694	0.91	753	1.09	809	1.26	863	1.43	914	1.60	964	1.77	1013	1.95	1060	2.14
2600	580	0.65	646	0.85	707	1.03	766	1.21	823	1.38	876	1.55	928	1.72	978	1.89	1027	2.07	1074	2.27
2800	595	0.79	660	0.99	722	1.17	780	1.35	837	1.52	890	1.69	942	1.86	992	2.03	1041	2.21	1088	2.40
3000	609	0.94	674	1.14	736	1.32	795	1.50	851	1.67	905	1.83	957	2.00	1007	2.18	1056	2.36	1100	2.55
3200	625	1.10	690	1.30	752	1.48	810	1.66	867	1.83	921	2.00	972	2.17	1022	2.34	1071	2.52	--	--
3400	641	1.28	706	1.47	768	1.66	827	1.83	883	2.00	937	2.17	989	2.34	1039	2.52	1087	2.70	'--	--

Standard Static Option with Motor rated at 2.4-hp
Medium Static Option with Motor rated at 2.4-hp
High Static Option with Motor rated at 3.7-hp
-- Exceeds recommended blower speed

Example RPM Selection

Model	Size (Tons)	Airflow Option	Phase	Max BHP	Blower Sheave	Motor Sheave	6 Turns Open	5 Turns Open	4 Turns Open	3 Turns Open	2 Turns Open	1 Turns Open	Fully Closed
ZY	08 (7.5)	Std.	3	2.4	AK74	1VL34	N/A	475	525	575	625	675	725
		Med.	3	2.4	AK74	1VL44	N/A	700	750	800	850	900	950
		H. Static	3	3.7	AK74	1VP50	N/A	850	900	950	1000	1050	1100

Example Additional Static Resistance

Model	Size (Tons)	CFM	Cooling Only[1]	Economizer [2 3]	4" Filters[2]	Electric Heat kW[2]							
						6/6.5	9.2/10.5/11	13.8/14/16	16/16.5/17	23	24.8/25.5/27.8	32/33/34	41.7/42.4
ZY	08 (7.5), 09 (8.5), 12 (10.0)	2200	0.04	0.11	---	---	---	---	0.07	---	0.09	0.10	0.12
		2600	0.06	0.13	---	---	---	---	0.09	---	0.11	0.12	0.15
		3000	0.10	0.17	---	---	---	---	0.12	---	0.14	0.15	0.19
		3400	0.13	0.20	---	---	---	---	0.15	---	0.18	0.19	0.23
		3800	0.16	0.25	---	---	---	---	0.19	---	0.22	0.23	0.27
		4000	0.17	0.28	---	---	---	---	0.21	---	0.24	0.25	0.30
		4400	0.20	0.33	---	---	---	---	0.25	---	0.29	0.30	0.35
		4800	0.22	0.38	---	---	---	---	0.30	---	0.34	0.35	0.41
		5200	0.24	0.43	---	---	---	---	0.35	---	0.39	0.41	0.47
		5600	0.26	0.46	---	---	---	---	0.41	---	0.45	0.47	0.54
		6000	0.28	0.50	---	---	---	---	0.48	---	0.52	0.54	0.60

Altitude and Temperature Correction for CFM, Static Pressure and Power.

The information below should be used to assist in application of product when being applied at altitudes at or exceeding 1000 feet above sea level.

The air flow rates listed in the standard blower performance tables are based on standard air at sea level. As the altitude or temperature increases, the density of air decreases. In order to use the indoor blower tables for high altitude applications, certain corrections are necessary.

A centrifugal fan is a "constant volume" device. This means that, if the RPM remains constant, the CFM delivered is the same regardless of the density of the air. However, since the air at high altitude is less dense, less static pressure will be generated and less power will be required than a similar application at sea level. Air density correction factors are shown below.

Altitude/Temperature Correction Factors

Air Temp.	Altitude (Ft.)										
	0	1000	2000	3000	4000	5000	6000	7000	8000	9000	10000
40	1.060	1.022	0.986	0.950	0.916	0.882	0.849	0.818	0.788	0.758	0.729
50	1.039	1.002	0.966	0.931	0.898	0.864	0.832	0.802	0.772	0.743	0.715
60	1.019	0.982	0.948	0.913	0.880	0.848	0.816	0.787	0.757	0.729	0.701
70	1.000	0.964	0.930	0.896	0.864	0.832	0.801	0.772	0.743	0.715	0.688
80	0.982	0.947	0.913	0.880	0.848	0.817	0.787	0.758	0.730	0.702	0.676
90	0.964	0.929	0.897	0.864	0.833	0.802	0.772	0.744	0.716	0.689	0.663
100	0.946	0.912	0.880	0.848	0.817	0.787	0.758	0.730	0.703	0.676	0.651

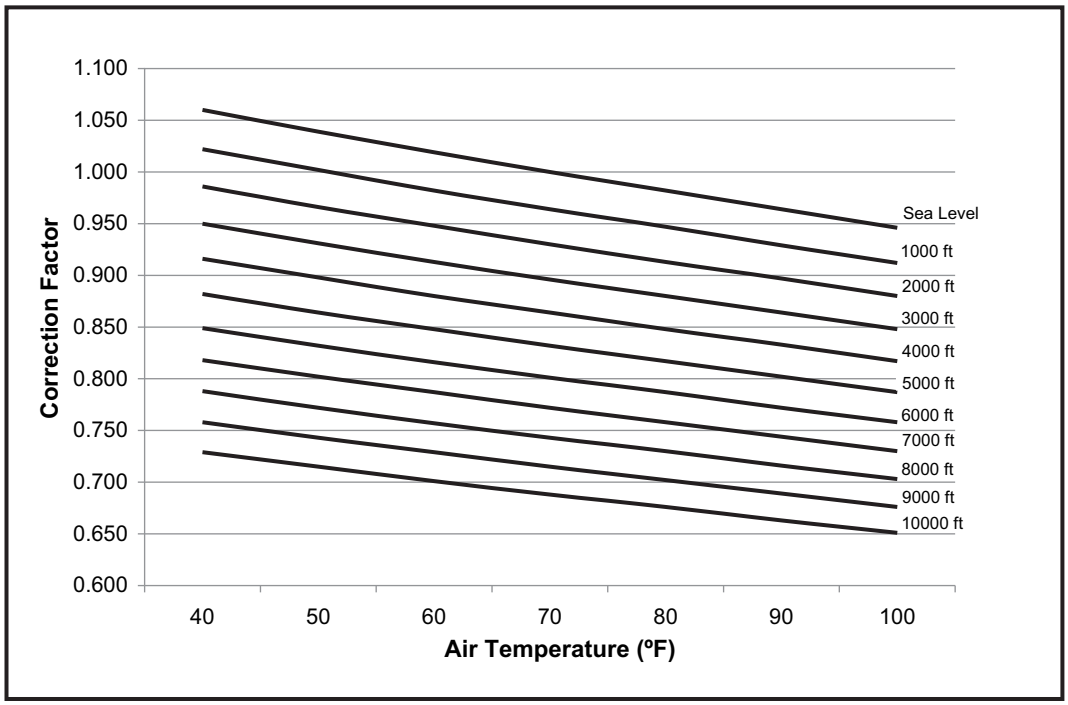

The examples below will assist in determining the airflow performance of the product at altitude.

Example 1: What are the corrected CFM, static pressure, and BHP at an elevation of 5,000 ft. if the airflow performance data is 3,000 CFM, 1.4 IWC and 2.0 BHP?

Solution: At an elevation of 5,000 ft. the indoor blower will still deliver 3,000 CFM if the rpm is unchanged. However, the Altitude correction must be used to determine the static pressure and BHP. Since no temperature data is given, we will assume an Air Temperature of 70°F. The Altitude/Temperature Factors show the correction factor to be 0.832.

Corrected static pressure = 1.4 x 0.832 = 1.16 IWC

Corrected BHP = 2.0 x 0.832 = 1.66

Example 2: A system, located at 5,000 feet of elevation, is to deliver 3,000 CFM at a static pressure of 1.4". Use the unit blower tables to select the blower speed and the BHP requirement.

Solution: As in the example above, no temperature information is given so 70°F is assumed.

The 1.4" static pressure given is at an elevation of 5,000 ft. The first step is to convert this static pressure to equivalent sea level conditions.

Sea level static pressure = 1.4" / .832 = 1.68"

Enter the Supply Air Blower Performance Table at 3,000 CFM and static pressure of 1.68". The rpm listed will be the same rpm needed at 5,000 ft.

Suppose that the corresponding BHP listed in the table is 2.0. This value must be corrected for elevation.

BHP at 5,000 ft. = 2.0 x .832 = 1.66

Indoor Blower Specifications

Model	Size (Tons)	Airflow Option	Motor						Motor Sheave			Blower Sheave			Belt
			Phase	HP	RPM	Eff.	SF	Frame	Datum Dia. (in.)	Bore (in.)	Model	Datum Dia. (in.)	Bore (in.)	Model	
ZQ	04 (3)	Std.	Direct Drive												
		Med.	1	1.5	1725	0.79	1.15	56HZ	1.9 - 2.9	5/8	1VL34	4.2	3/4	AK46	A39
		Med.	3	2.4	1725	0.80	1.15	56Y	1.9 - 2.9	5/8	1VL34	4.2	3/4	AK46	A39
		H. Static	3	2.4	1725	0.80	1.15	56Y	2.8 - 3.8	5/8	1VL44	4.2	3/4	AK46	A40
ZQ	05 (4)	Std.	Direct Drive												
		Med.	1	1.5	1725	0.79	1.15	56HZ	1.9 - 2.9	5/8	1VL34	4.2	3/4	AK46	A39
		Med.	3	2.4	1725	0.80	1.15	56Y	1.9 - 2.9	5/8	1VL34	4.2	3/4	AK46	A39
		H. Static	3	2.4	1725	0.80	1.15	56Y	2.8 - 3.8	5/8	1VL44	4.2	3/4	AK46	A40
ZQ	06 (5)	Std.	Direct Drive												
		Med.	1	1.5	1725	0.79	1.15	56HZ	1.9 - 2.9	5/8	1VL34	4.2	3/4	AK46	A37
		Med.	3	2.4	1725	0.80	1.15	56Y	1.9 - 2.9	5/8	1VL34	4.2	3/4	AK46	A37
		H. Static	3	2.9	1725	0.81	1.15	56Y	2.8 - 3.8	7/8	1VL44	4.2	3/4	AK46	A39
ZX	A7 (6)	Std.	3	2.4	1725	0.80	1.15	56Y	1.9 - 2.9	5/8	1VL34	4.7	3/4	AK51	A39
		Med.	3	2.9	1725	0.81	1.15	56Y	2.8 - 3.8	7/8	1VL44	4.7	3/4	AK51	A40
		H. Static	3	3.7	1725	0.84	1.15	56HZ	3.4 - 4.4	7/8	1VP50	4.7	3/4	AK51	A41
ZX	08 (7.5)	Std.	3	2.4	1725	0.80	1.15	56Y	1.9 - 2.9	5/8	1VL34	7.0	1	AK74	A47
		Med.	3	2.9	1725	0.81	1.15	56Y	2.8 - 3.8	7/8	1VL44	7.0	1	AK74	A48
		H. Static	3	3.7	1725	0.84	1.15	56HZ	3.4 - 4.4	7/8	1VP50	7.0	1	AK74	A50
ZX	09 (8.5)	Std.	3	2.4	1725	0.80	1.15	56Y	1.9 - 2.9	5/8	1VL34	7.0	1	AK74	A47
		Med.	3	2.4	1725	0.80	1.15	56Y	2.8 - 3.8	5/8	1VL44	7.0	1	AK74	A48
		H. Static	3	3.7	1725	0.84	1.15	56HZ	3.4 - 4.4	7/8	1VP50	7.0	1	AK74	A50
ZX	12 (10)	Std.	3	2.4	1725	0.80	1.15	56Y	2.8 - 3.8	5/8	1VL44	7.5	1	AK79	A50
		Med.	3	3.7	1725	0.84	1.15	56HZ	3.4 - 4.4	7/8	1VP50	7.5	1	AK79	A50
		H. Static	3	5.25	1725	0.84	1.15	145TY	4.3 - 5.3	7/8	1VP56	7.9	1	BK85	BX52
ZX	14 (12.5)	Std.	3	2.9	1750	0.87	1.15	56Z	2.8 - 3.8	7/8	1VL44	7.5	1	AK79	A50
		Med.	3	3.7	1750	0.90	1.15	184TZ	3.4 - 4.4	7/8	1VP50	7.5	1	AK79	A52
		H. Static	3	5.25	1750	0.90	1.15	184TZ	4.3 - 5.3	7/8	1VP56	7.9	1	BK85	BX54
ZY	04 (3)	Std.	Direct Drive												
		Med.	1	1.5	1725	0.79	1.15	56HZ	1.9 - 2.9	5/8	1VL34	4.2	3/4	AK46	A39
		Med.	3	2.4	1725	0.80	1.15	56Y	1.9 - 2.9	5/8	1VL34	4.2	3/4	AK46	A39
		H. Static	3	2.4	1725	0.80	1.15	56Y	2.8 - 3.8	5/8	1VL44	4.2	3/4	AK46	A40
ZY	05 (4)	Std.	Direct Drive												
		Med.	1	1.5	1725	0.79	1.15	56HZ	1.9 - 2.9	5/8	1VL34	4.2	3/4	AK46	A39
		Med.	3	2.4	1725	0.80	1.15	56Y	1.9 - 2.9	5/8	1VL34	4.2	3/4	AK46	A39
		H. Static	3	2.9	1725	0.81	1.15	56Y	2.8 - 3.8	7/8	1VL44	4.2	3/4	AK46	A40
ZY	06 (5)	Std.	Direct Drive												
		Med.	1	1.5	1750	0.83	1.15	56H	1.9 - 2.9	5/8	1VL34	4.2	3/4	AK46	A37
		Med.	3	2.4	1750	0.87	1.15	56HZ	1.9 - 2.9	5/8	1VL34	4.2	3/4	AK46	A37
		H. Static	3	2.9	1750	0.87	1.15	56Z	2.8 - 3.8	7/8	1VL44	4.2	3/4	AK46	A39
ZY	07 (6)	Std.	3	2.4	1725	0.80	1.15	56Y	1.9 - 2.9	5/8	1VL34	7.0	1	AK74	A47
		Med.	3	2.9	1725	0.81	1.15	56Y	2.8 - 3.8	7/8	1VL44	7.0	1	AK74	A48
		H. Static	3	3.7	1725	0.84	1.15	56HZ	3.4 - 4.4	7/8	1VP50	7.0	1	AK74	A48
ZY	A7 (6)	Std.	3	2.4	1725	0.80	1.15	56Y	1.9 - 2.9	5/8	1VL34	7.0	1	AK74	A47
		Med.	3	2.9	1725	0.81	1.15	56Y	2.8 - 3.8	7/8	1VL44	7.0	1	AK74	A48
		H. Static	3	3.7	1725	0.84	1.15	56HZ	3.4 - 4.4	7/8	1VP50	7.0	1	AK74	A48
ZY	08 (7.5)	Std.	3	2.4	1725	0.80	1.15	56Y	1.9 - 2.9	5/8	1VL34	7.0	1	AK74	A47
		Med.	3	2.4	1725	0.80	1.15	56Y	2.8 - 3.8	5/8	1VL44	7.0	1	AK74	A48
		H. Static	3	3.7	1725	0.84	1.15	56HZ	3.4 - 4.4	7/8	1VP50	7.0	1	AK74	A50
ZY	09 (8.5)	Std.	3	2.4	1725	0.80	1.15	56Y	1.9 - 2.9	5/8	1VL34	7.0	1	AK74	A47
		Med.	3	2.4	1725	0.80	1.15	56Y	2.8 - 3.8	5/8	1VL44	7.0	1	AK74	A48
		H. Static	3	3.7	1725	0.84	1.15	56HZ	3.4 - 4.4	7/8	1VP50	7.0	1	AK74	A50
ZY	12 (10)	Std.	3	2.4	1725	0.80	1.15	56Y	2.8 - 3.8	5/8	1VL44	7.5	1	AK79	A50
		Med.	3	3.7	1725	0.84	1.15	56HZ	3.4 - 4.4	7/8	1VP50	7.5	1	AK79	A50
		H. Static	3	5.25	1725	0.84	1.15	145TY	4.3 - 5.3	7/8	1VP56	7.9	1	BK85	BX52

Indoor Blower Specifications (Continued)

Model	Size (Tons)	Airflow Option	Motor						Motor Sheave			Blower Sheave			Belt
			Phase	HP	RPM	Eff.	SF	Frame	Datum Dia. (in.)	Bore (in.)	Model	Datum Dia. (in.)	Bore (in.)	Model	
ZL	08 (7.5)	Std.	3	2.4	1725	0.80	1.15	56Y	1.9 - 2.9	5/8	1VL34	7.0	1	AK74	A47
		Med.	3	2.4	1725	0.80	1.15	56Y	2.8 - 3.8	5/8	1VL44	7.0	1	AK74	A48
		H. Static	3	3.7	1725	0.84	1.15	56HZ	3.4 - 4.4	7/8	1VP50	7.0	1	AK74	A50
ZL	09 (8.5)	Std.	3	2.4	1725	0.80	1.15	56Y	1.9 - 2.9	5/8	1VL34	7.0	1	AK74	A47
		Med.	3	2.4	1725	0.80	1.15	56Y	2.8 - 3.8	5/8	1VL44	7.0	1	AK74	A48
		H. Static	3	3.7	1725	0.84	1.15	56HZ	3.4 - 4.4	7/8	1VP50	7.0	1	AK74	A50
ZL	12 (10)	Std.	3	2.4	1725	0.80	1.15	56Y	2.8 - 3.8	5/8	1VL44	7.5	1	AK79	A50
		Med.	3	3.7	1725	0.84	1.15	56HZ	3.4 - 4.4	7/8	1VP50	7.5	1	AK79	A50
		H. Static	3	5.25	1725	0.84	1.15	145TY	4.3 - 5.3	7/8	1VP56	7.9	1	BK85	BX52
ZL	14 (10)	Std.	3	2.9	1750	0.87	1.15	56Y	2.8 - 3.8	5/8	1VL44	7.5	1	AK79	A50
		Med.	3	3.7	1750	0.90	1.15	184TZ	3.4 - 4.4	7/8	1VP50	7.5	1	AK79	A52
		H. Static	3	5.25	1750	0.90	1.15	184TZ	4.3 - 5.3	7/8	1VP56	7.9	1	BK85	BX54

RPM Selection

Model	Size (Tons)	Airflow Option	Phase	MAX BHP	Blower Sheave	Motor Sheave	6Turns Open	5Turns Open	4Turns Open	3 Turns Open	2 Turns Open	1 Turns Open	Fully Closed
ZX	A7 (6)	Std.	3	2.4	AK51	1VL34	N/A	707	782	856	931	1005	1080
		Med.	3	2.9	AK51	1VL44	N/A	1043	1117	1191	1266	1340	1415
		H. Static	3	3.7	AK51	1VP50	N/A	1266	1340	1415	1489	1564	1638
ZX	08 (7.5)	Std.	3	2.4	AK74	1VL34	N/A	475	525	575	625	675	725
		Med.	3	2.9	AK74	1VL44	N/A	700	750	800	850	900	950
		H. Static	3	3.7	AK74	1VP50	N/A	850	900	950	1000	1050	1100
ZX	09 (8.5)	Std.	3	2.4	AK74	1VL34	N/A	475	525	575	625	675	725
		Med.	3	2.4	AK74	1VL44	N/A	700	750	800	850	900	950
		H. Static	3	3.7	AK74	1VP50	N/A	850	900	950	1000	1050	1100
ZX	12 (10)	Std.	3	2.4	AK79	1VL44	N/A	653	700	747	793	840	887
		Med.	3	3.7	AK79	1VP50	N/A	793	840	887	933	980	1027
		H. Static	3	5.25	BK85	1VP56	953	997	1041	1085	1130	1174	N/A
ZX	14 (12)	Std.	3	2.9	AK79	1VL44	N/A	653	700	747	793	840	887
		Med.	3	3.7	AK79	1VP50	N/A	793	840	887	933	980	1027
		H. Static	3	5.25	BK85	1VP56	953	997	1041	1085	1130	1174	N/A
ZY	04 (3)	Std.						Direct Drive					
		Med.	1	1.5	AK46	1VL34	N/A	792	875	958	1042	1125	1208
		Med.	3	2.4	AK46	1VL34	N/A	792	875	958	1042	1125	1208
		H. Static	3	2.4	AK46	1VL44	N/A	1167	1250	1333	1417	1500	1593
ZY	05 (4)	Std.						Direct Drive					
		Med.	1	1.5	AK46	1VL34	N/A	792	875	958	1042	1125	1208
		Med.	3	2.4	AK46	1VL34	N/A	792	875	958	1042	1125	1208
		H. Static	3	2.9	AK46	1VL44	N/A	1167	1250	1333	1417	1500	1593
ZY	06 (5)	Std.						Direct Drive					
		Med.	1	1.5	AK46	1VL34	N/A	792	875	958	1042	1125	1208
		Med.	3	2.4	AK46	1VL34	N/A	792	875	958	1042	1125	1208
		H. Static	3	2.9	AK46	1VL44	N/A	1167	1250	1333	1417	1500	1593
ZY	07 (6)	Std.	3	2.4	AK74	1VL34	N/A	475	525	575	625	675	725
		Med.	3	2.9	AK74	1VL44	N/A	700	750	800	850	900	950
		H. Static	3	3.7	AK74	1VP50	N/A	850	900	950	1000	1050	1100
ZY	A7 (6)	Std.	3	2.4	AK74	1VL34	N/A	475	525	575	625	675	725
		Med.	3	2.9	AK74	1VL44	N/A	700	750	800	850	900	950
		H. Static	3	3.7	AK74	1VP50	N/A	850	900	950	1000	1050	1100
ZY	08 (7.5)	Std.	3	2.4	AK74	1VL34	N/A	475	525	575	625	675	725
		Med.	3	2.4	AK74	1VL44	N/A	700	750	800	850	900	950
		H. Static	3	3.7	AK74	1VP50	N/A	850	900	950	1000	1050	1100
ZY	09 (8.5)	Std.	3	2.4	AK74	1VL34	N/A	475	525	575	625	675	725
		Med.	3	2.4	AK74	1VL44	N/A	700	750	800	850	900	950
		H. Static	3	3.7	AK74	1VP50	N/A	850	900	950	1000	1050	1100
ZY	12 (10)	Std.	3	2.4	AK79	1VL44	N/A	653	700	747	793	840	887
		Med.	3	3.7	AK79	1VP50	N/A	793	840	887	933	980	1027
		H. Static	3	5.25	BK85	1VP56	953	997	1041	1085	1130	1174	N/A

RPM Selection (Continued)

Model	Size (Tons)	Airflow Option	Phase	MAX BHP	Blower Sheave	Motor Sheave	6Turns Open	5Turns Open	4Turns Open	3 Turns Open	2 Turns Open	1 Turns Open	Fully Closed
ZQ	04 (3)	Std.						Direct Drive					
		Med.	1	1.5	AK46	1VL34	N/A	792	875	958	1042	1125	1208
		Med.	3	2.4	AK46	1VL34	N/A	792	875	958	1042	1125	1208
		H. Static	3	2.4	AK46	1VL44	N/A	1167	1250	1333	1417	1500	1593
ZQ	05 (4)	Std.						Direct Drive					
		Med.	1	1.5	AK46	1VL34	N/A	792	875	958	1042	1125	1208
		Med.	3	2.4	AK46	1VL34	N/A	792	875	958	1042	1125	1208
		H. Static	3	2.4	AK46	1VL44	N/A	1167	1250	1333	1417	1500	1593
ZQ	06 (5)	Std.						Direct Drive					
		Med.	1	1.5	AK46	1VL34	N/A	792	875	958	1042	1125	1208
		Med.	3	2.4	AK46	1VL34	N/A	792	875	958	1042	1125	1208
		H. Static	3	2.9	AK46	1VL44	N/A	1167	1250	1333	1417	1500	1593
ZL	08 (7.5)	Std.	3	2.4	AK74	1VL34	N/A	475	525	575	625	675	725
		Med.	3	2.4	AK74	1VL44	N/A	700	750	800	850	900	950
		H. Static	3	3.7	AK74	1VP50	N/A	850	900	950	1000	1050	1100
ZL	09 (8.5)	Std.	3	2.4	AK74	1VL34	N/A	475	525	575	625	675	725
		Med.	3	2.4	AK74	1VL44	N/A	700	750	800	850	900	950
		H. Static	3	3.7	AK74	1VP50	N/A	850	900	950	1000	1050	1100
ZL	12 (10)	Std.	3	2.4	AK79	1VL44	N/A	653	700	747	793	840	887
		Med.	3	3.7	AK79	1VP50	N/A	793	840	887	933	980	1027
		H. Static	3	5.25	BK85	1VP56	953	997	1041	1085	1130	1174	N/A
ZL	14 (12.5)	Std.	3	2.9	AK79	1VL44	N/A	653	700	747	793	840	887
		Med.	3	3.7	AK79	1VP50	N/A	793	840	887	933	980	1027
		H. Static	3	5.25	BK85	1VP56	953	997	1041	1085	1130	1174	N/A

Additional Static Resistance - ZQ04-06

Model	Size (Tons)	CFM	Cooling Only[1]	Economizer[2 3]	4" Filter[2]	Electric Heat kW[2]			
						6/6.5	9.2/10.5/11	13.8/14/16	23
ZQ	04 (3.0), 05 (4.0),	900	0.04	0.15	---	0.00	0.00	0.01	0.01
		1000	0.05	0.18	---	0.00	0.00	0.02	0.02
		1100	0.06	0.21	---	0.01	0.01	0.02	0.03
		1200	0.07	0.24	---	0.01	0.01	0.02	0.03
		1300	0.10	0.28	---	0.01	0.01	0.03	0.03
		1400	0.12	0.33	---	0.02	0.02	0.03	0.04
		1500	0.14	0.44	---	0.02	0.02	0.04	0.04
		1600	0.16	0.52	---	0.02	0.02	0.04	0.05
		1700	0.18	0.59	---	0.03	0.03	0.05	0.05
		1800	0.22	0.66	---	0.03	0.03	0.05	0.06
		1900	0.25	0.74	---	0.04	0.04	0.06	0.07
		2000	0.28	0.81	---	0.04	0.04	0.07	0.08
		2100	0.33	0.88	---	0.05	0.05	0.07	0.08
		2200	0.36	0.95	---	0.06	0.06	0.08	0.09
		2300	0.41	1.03	---	0.06	0.06	0.09	0.10
		2400	0.45	1.10	---	0.07	0.07	0.10	0.11
		2500	0.50	1.17	---	0.08	0.08	0.11	0.12
	06 (5.0)	1800	0.23	0.66	---	0.03	0.03	0.05	0.06
		2000	0.28	0.81	---	0.04	0.04	0.07	0.08
		2200	0.32	0.95	---	0.06	0.06	0.08	0.09
		2400	0.37	1.10	---	0.07	0.07	0.10	0.11

1. Add these values to the available static resistance in the respective Blower Performance Tables.
2. Deduct these values from the available external static pressure shown in the respective Blower Performance Tables.
3. The pressure drop through the economizer is greater for 100% outdoor air than for 100% return air. If the resistance of the return air duct is less than 0.25 IWG, the unit will deliver less CFM during full economizer operation.

Additional Static Resistance - ZXA7, 08-14

Model	Size (Tons)	CFM	Cooling Only[1]	Economizer [2 3]	4" Filter[2]	Electric Heat kW[2]							
						6/6.5	9.2/10.5/11	13.8/14/16	16/16.5/17	23	24.8/25.5/27.8	32/33/34	41.7/42.4
ZX	A7 (6)	1800	0.23	0.66	---	0.03	0.03	0.05	---	---	---	---	---
		2000	0.28	0.81	---	0.04	0.04	0.06	---	---	---	---	---
		2200	0.32	0.95	---	0.06	0.06	0.07	---	---	---	---	---
		2400	0.37	1.10	---	0.07	0.07	0.08	---	---	---	---	---
		2600	0.38	1.25	---	0.08	0.08	0.09	---	---	---	---	---
		2800	0.41	1.39	---	0.09	0.09	0.10	---	---	---	---	---
		3000	0.45	1.54	---	0.11	0.11	0.12	---	---	---	---	---
ZX	08 (7.5), 09 (8.5), 12 (10.0), 14 (12.5)	2200	0.04	0.18	---	---	---	---	0.07	---	0.09	0.10	0.12
		2600	0.06	0.24	---	---	---	---	0.09	---	0.11	0.12	0.15
		3000	0.10	0.35	---	---	---	---	0.12	---	0.14	0.15	0.19
		3400	0.13	0.47	---	---	---	---	0.15	---	0.18	0.19	0.23
		4800	0.22	0.91	---	---	---	---	0.30	---	0.34	0.35	0.41
		5200	0.24	1.04	---	---	---	---	0.35	---	0.39	0.41	0.47
		5600	0.26	1.17	---	---	---	---	0.41	---	0.45	0.47	0.54
		6000	0.28	1.30	---	---	---	---	0.48	---	0.52	0.54	0.60

1. Add these values to the available static resistance in the respective Blower Performance Tables.
2. Deduct these values from the available external static pressure shown in the respective Blower Performance Tables.
3. The pressure drop through the economizer is greater for 100% outdoor air than for 100% return air. If the resistance of the return air duct is less than 0.25 IWG, the unit will deliver less CFM during full economizer operation.

Additional Static Resistance - ZY04-12

Model	Size (Tons)	CFM	Cooling Only[1]	Economizer [2 3]	4" Filters[2]	Electric Heat kW[2]							
						6/6.5	9.2/10.5/11	13.8/14/16	16/16.5/17	23	24.8/25.5/27.8	32/33/34	41.7/42.4
ZY	04 (3.0)	900	0.04	0.15	---	0.00	0.00	0.01	---	0.01	---	---	---
		1000	0.05	0.18	---	0.00	0.00	0.02	---	0.02	---	---	---
		1100	0.06	0.21	---	0.01	0.01	0.02	---	0.03	---	---	---
		1200	0.07	0.24	---	0.01	0.01	0.02	---	0.03	---	---	---
		1300	0.10	0.28	---	0.01	0.01	0.03	---	0.03	---	---	---
		1400	0.12	0.33	---	0.02	0.02	0.03	---	0.04	---	---	---
		1500	0.14	0.44	---	0.02	0.02	0.04	---	0.04	---	---	---
	05 (4.0)	1200	0.06	0.24	---	0.01	0.01	0.02	---	0.03	---	---	---
		1300	0.06	0.28	---	0.01	0.01	0.03	---	0.03	---	---	---
		1400	0.06	0.33	---	0.02	0.02	0.03	---	0.04	---	---	---
		1500	0.07	0.44	---	0.02	0.02	0.04	---	0.04	---	---	---
		1600	0.08	0.52	---	0.02	0.02	0.04	---	0.05	---	---	---
		1700	0.11	0.59	---	0.03	0.03	0.05	---	0.05	---	---	---
		1800	0.13	0.66	---	0.03	0.03	0.05	---	0.06	---	---	---
		1900	0.16	0.74	---	0.04	0.04	0.06	---	0.07	---	---	---
		2000	0.20	0.81	---	0.04	0.04	0.07	---	0.08	---	---	---
	06 (5.0)	1800	0.23	0.66	---	0.03	0.03	0.05	---	0.06	---	---	---
		2000	0.28	0.81	---	0.04	0.04	0.07	---	0.08	---	---	---
		2200	0.32	0.95	---	0.06	0.06	0.08	---	0.09	---	---	---
		2400	0.37	1.10	---	0.07	0.07	0.10	---	0.11	---	---	---
		2500	0.50	1.17	---	0.08	0.08	0.11	---	0.12	---	---	---
	07 (6.0)	1800	0.23	0.13	---	0.03	---	---	0.05	---	0.06	---	---
		2000	0.28	0.15	---	0.04	---	---	0.06	---	0.07	---	---
		2200	0.32	0.18	---	0.06	---	---	0.07	---	0.09	---	---
		2400	0.37	0.21	---	0.07	---	---	0.08	---	0.1	---	---
		2600	0.38	0.24	---	0.08	---	---	0.09	---	0.11	---	---
		2800	0.41	0.29	---	0.09	---	---	0.10	---	0.12	---	---
		3000	0.45	0.35	---	0.11	---	---	0.12	---	0.14	---	---
	A7 (6.0)	1800	0.23	0.13	---	0.03	---	---	0.05	---	0.06	---	---
		2000	0.28	0.15	---	0.04	---	---	0.06	---	0.07	---	---
		2200	0.32	0.18	---	0.06	---	---	0.07	---	0.09	---	---
		2400	0.37	0.21	---	0.07	---	---	0.08	---	0.1	---	---
		2600	0.38	0.24	---	0.08	---	---	0.09	---	0.11	---	---
		2800	0.41	0.29	---	0.09	---	---	0.10	---	0.12	---	---
		3000	0.45	0.35	---	0.11	---	---	0.12	---	0.14	---	---
	08 (7.5), 09 (8.5), 12 (10.0)	2200	0.04	0.18	---	---	---	---	0.07	---	0.09	0.10	0.12
		2600	0.06	0.24	---	---	---	---	0.09	---	0.11	0.12	0.15
		3000	0.10	0.35	---	---	---	---	0.12	---	0.14	0.15	0.19
		3400	0.13	0.47	---	---	---	---	0.15	---	0.18	0.19	0.23
		3800	0.16	0.59	---	---	---	---	0.19	---	0.22	0.23	0.27
		4000	0.17	0.66	---	---	---	---	0.21	---	0.24	0.25	0.30
		4400	0.20	0.79	---	---	---	---	0.25	---	0.29	0.30	0.35
		4800	0.22	0.91	---	---	---	---	0.30	---	0.34	0.35	0.41
		5200	0.24	1.04	---	---	---	---	0.35	---	0.39	0.41	0.47
		5600	0.26	1.17	---	---	---	---	0.41	---	0.45	0.47	0.54
		6000	0.28	1.30	---	---	---	---	0.48	---	0.52	0.54	0.60

1. Add these values to the available static resistance in the respective Blower Performance Tables.
2. Deduct these values from the available external static pressure shown in the respective Blower Performance Tables.
3. The pressure drop through the economizer is greater for 100% outdoor air than for 100% return air. If the resistance of the return air duct is less than 0.25 IWG, the unit will deliver less CFM during full economizer operation.

Additional Static Resistance - ZL08-14

Model	Size (Tons)	CFM	Cooling Only[1]	Economizer [2 3]	4" Filters[2]	Electric Heat kW[2]							
						6/6.5	9.2/10.5/11	13.8/14/16	16/16.5/17	23	24.8/25.5/27.8	32/33/34	41.7/42.4
ZL	08 (7.5), 09 (8.5), 12 (10.0) 14 (12.5)	2200	0.04	0.18	---	---	---	---	0.07	---	0.09	0.10	0.12
		2600	0.06	0.24	---	---	---	---	0.09	---	0.11	0.12	0.15
		3000	0.10	0.35	---	---	---	---	0.12	---	0.14	0.15	0.19
		3400	0.13	0.47	---	---	---	---	0.15	---	0.18	0.19	0.23
		3800	0.16	0.59	---	---	---	---	0.19	---	0.22	0.23	0.27
		4000	0.17	0.66	---	---	---	---	0.21	---	0.24	0.25	0.30
		4400	0.20	0.79	---	---	---	---	0.25	---	0.29	0.30	0.35
		4800	0.22	0.91	---	---	---	---	0.30	---	0.34	0.35	0.41
		5200	0.24	1.04	---	---	---	---	0.35	---	0.39	0.41	0.47
		5600	0.26	1.17	---	---	---	---	0.41	---	0.45	0.47	0.54
		6000	0.28	1.30	---	---	---	---	0.48	---	0.52	0.54	0.60

1. Add these values to the available static resistance in the respective Blower Performance Tables.
2. Deduct these values from the available external static pressure shown in the respective Blower Performance Tables.
3. The pressure drop through the economizer is greater for 100% outdoor air than for 100% return air. If the resistance of the return air duct is less than 0.25 IWG, the unit will deliver less CFM during full economizer operation.

Airflow Performance

ZXA7, 08-14 Side Duct Application (Belt Drive)

ZXA7 (6.0 Ton) Side Duct

CFM	Available External Static																			
	0.2		0.4		0.6		0.8		1.0		1.2		1.4		1.6		1.8		2.0	
	RPM	BHP	RPM	BHP	RPM	BHP	RPM	BHP	RPM	BHP	RPM	BHP	RPM	BHP	RPM	BHP	RPM	BHP	RPM	BHP
1800	915	0.67	979	0.77	1041	0.89	1102	1.02	1162	1.16	1221	1.31	1278	1.45	1334	1.59	1389	1.72	1442	1.82
1900	939	0.78	1003	0.87	1065	0.99	1126	1.12	1186	1.27	1244	1.41	1302	1.56	1358	1.69	1412	1.82	1466	1.93
2000	964	0.89	1028	0.99	1090	1.11	1151	1.24	1211	1.38	1269	1.52	1327	1.67	1383	1.81	1437	1.93	1491	2.04
2100	990	1.01	1054	1.11	1116	1.23	1177	1.36	1237	1.50	1296	1.65	1353	1.79	1409	1.93	1464	2.05	1517	2.16
2200	1018	1.14	1081	1.24	1143	1.36	1204	1.49	1264	1.63	1323	1.78	1380	1.92	1436	2.06	1491	2.18	1544	2.29
2300	1046	1.28	1110	1.37	1172	1.49	1233	1.62	1293	1.77	1351	1.91	1409	2.05	1465	2.19	1519	2.32	1573	2.43
2400	1076	1.42	1139	1.52	1201	1.63	1262	1.76	1322	1.91	1381	2.05	1438	2.20	1494	2.33	1549	2.46	1602	2.57
2500	1106	1.56	1170	1.66	1232	1.78	1293	1.91	1353	2.05	1411	2.20	1469	2.34	1525	2.48	1579	2.60	1633	2.71
2600	1138	1.71	1201	1.81	1263	1.93	1324	2.06	1384	2.20	1443	2.35	1500	2.49	1556	2.63	1611	2.75	--	--
2700	1170	1.87	1234	1.96	1296	2.08	1357	2.21	1417	2.35	1475	2.50	1533	2.64	1589	2.78	1638	2.91	--	--
2800	1203	2.02	1267	2.12	1329	2.24	1390	2.37	1450	2.51	1509	2.66	1566	2.80	1622	2.94	--	--	--	--
2900	1238	2.18	1301	2.28	1364	2.40	1425	2.53	1484	2.67	1543	2.81	1600	2.96	--	--	--	--	--	--
3000	1273	2.34	1337	2.44	1399	2.56	1460	2.69	1520	2.83	1578	2.97	1635	3.12	--	--	--	--	--	--

Standard Static Option with Motor rated at 2.4-hp
Medium Static Option with Motor rated at 2.9-hp
High Static Option with Motor rated at 3.7-hp
-- Exceeds recommended blower speed

ZX08 (7.5 Ton) Side Duct

CFM	AVAILABLE EXTERNAL STATIC PRESSURE - IWG[1]																			
	0.2		0.4		0.6		0.8		1.0		1.2		1.4		1.6		1.8		2.0	
	RPM	BHP	RPM	BHP	RPM	BHP	RPM	BHP	RPM	BHP	RPM	BHP	RPM	BHP	RPM	BHP	RPM	BHP	RPM	BHP
2250	557	0.48	623	0.67	685	0.85	742	1.04	796	1.23	848	1.41	898	1.59	947	1.77	997	1.94	1049	2.11
2400	569	0.56	636	0.75	698	0.94	755	1.13	809	1.32	860	1.50	910	1.68	960	1.86	1010	2.03	1062	2.20
2600	588	0.69	655	0.88	716	1.07	773	1.26	827	1.44	879	1.63	929	1.81	978	1.98	1029	2.16	1080	2.32
2800	607	0.83	674	1.02	736	1.21	793	1.40	847	1.58	898	1.77	948	1.95	998	2.13	1048	2.30	1100	2.47
3000	628	0.99	695	1.18	757	1.37	814	1.56	868	1.74	919	1.92	969	2.11	1019	2.28	1069	2.45	--	--
3200	650	1.16	717	1.35	779	1.54	836	1.73	890	1.91	941	2.10	991	2.28	1041	2.45	1091	2.63	--	--
3400	673	1.35	740	1.54	802	1.73	859	1.91	913	2.10	964	2.28	1014	2.46	1064	2.64	--	--	--	--
3600	697	1.55	764	1.74	826	1.93	883	2.11	937	2.30	988	2.48	1038	2.67	1088	2.84	--	--	--	--
3750	716	1.71	783	1.90	844	2.09	901	2.28	955	2.46	1007	2.65	1057	2.83	1100	3.00	--	--	--	--

Standard Static Option with Motor rated at 2.4-hp
Medium Static Option with Motor rated at 2.9-hp
High Static Option with Motor rated at 3.7-hp
-- Exceeds recommended Blower speed

1. Blower performance includes gas heat exchangers and 2” filters. See STATIC RESISTANCE table for additional applications.

Note: See RPM SELECTION table to determine desired motor sheave setting and to determine the maximum continuous BHP.
kW = 0.929 x BHP

ZX09 (8.5 Ton) Side Duct

CFM	AVAILABLE EXTERNAL STATIC PRESSURE - IWG[1]																			
	0.2		0.4		0.6		0.8		1.0		1.2		1.4		1.6		1.8		2.0	
	RPM	BHP	RPM	BHP	RPM	BHP	RPM	BHP	RPM	BHP	RPM	BHP	RPM	BHP	RPM	BHP	RPM	BHP	RPM	BHP
2550	549	0.45	609	0.69	668	0.91	727	1.11	784	1.31	840	1.49	893	1.68	944	1.87	991	2.06	1035	2.25
2600	552	0.48	611	0.72	671	0.94	729	1.14	787	1.34	842	1.53	896	1.71	946	1.90	994	2.09	1038	2.29
2800	562	0.62	621	0.86	681	1.07	739	1.28	796	1.47	852	1.66	905	1.85	956	2.03	1004	2.22	1048	2.42
3000	573	0.77	632	1.00	692	1.22	750	1.43	807	1.62	863	1.81	917	2.00	967	2.18	1015	2.37	1059	2.57
3200	585	0.93	644	1.16	704	1.38	762	1.59	820	1.78	875	1.97	929	2.16	979	2.34	1027	2.53	1071	2.73
3400	598	1.10	658	1.34	717	1.55	776	1.76	833	1.95	889	2.14	942	2.33	993	2.51	1040	2.70	1084	2.90
3600	613	1.28	672	1.52	732	1.74	790	1.94	848	2.14	903	2.32	957	2.51	1008	2.70	1055	2.89	1099	3.08
3800	629	1.47	688	1.71	748	1.93	806	2.13	864	2.33	919	2.52	973	2.70	1024	2.89	1071	3.08	--	--
4000	646	1.68	706	1.91	765	2.13	824	2.34	881	2.53	937	2.72	990	2.90	1041	3.09	1088	3.28	--	--
4200	665	1.89	724	2.12	784	2.34	842	2.55	900	2.74	955	2.93	1009	3.11	1059	3.30	--	--	--	--
4250	670	1.94	729	2.18	789	2.40	847	2.60	904	2.80	960	2.98	1014	3.17	1064	3.35	--	--	--	--

Standard Static Option with Motor rated at 2.4-hp
Medium Static Option with Motor rated at 2.4-hp
High Static Option with Motor rated at 3.7-hp
-- Exceeds recommended Blower speed

1. Blower performance includes gas heat exchangers and 2” filters. See STATIC RESISTANCE table for additional applications.

Note: See RPM SELECTION table to determine desired motor sheave setting and to determine the maximum continuous BHP.
kW = 0.929 x BHP

ZX12 (10 Ton) Side Duct

CFM	AVAILABLE EXTERNAL STATIC PRESSURE - IWG[1]																			
	0.2		0.4		0.6		0.8		1.0		1.2		1.4		1.6		1.8		2.0	
	RPM	BHP	RPM	BHP	RPM	BHP	RPM	BHP	RPM	BHP	RPM	BHP	RPM	BHP	RPM	BHP	RPM	BHP	RPM	BHP
3000			689	0.94	740	1.19	790	1.44	841	1.70	891	1.94	941	2.19	990	2.43	1038	2.66	1085	2.89
3200	654	0.84	702	1.09	752	1.35	803	1.60	854	1.85	904	2.10	954	2.34	1003	2.58	1051	2.82	1098	3.04
3400	665	1.00	715	1.26	766	1.51	816	1.77	867	2.02	917	2.27	967	2.51	1016	2.75	1064	2.99	1111	3.21
3600	680	1.19	730	1.44	780	1.70	831	1.95	881	2.20	932	2.45	982	2.70	1031	2.94	1079	3.17	1125	3.40
3800	695	1.39	745	1.64	796	1.90	846	2.15	897	2.40	947	2.65	997	2.90	1046	3.14	1094	3.37	1141	3.60
4000	712	1.61	762	1.86	812	2.12	863	2.37	914	2.62	964	2.87	1014	3.12	1063	3.36	1111	3.59	1158	3.82
4200	729	1.85	779	2.10	830	2.36	881	2.61	931	2.86	982	3.11	1032	3.35	1081	3.59	1129	3.83	1174	4.06
4400	748	2.10	798	2.36	849	2.61	899	2.87	950	3.12	1000	3.37	1050	3.61	1099	3.85	1147	4.09	--	--
4600	768	2.38	818	2.64	869	2.89	919	3.15	970	3.40	1020	3.65	1070	3.89	1119	4.13	1167	4.36	--	--
4800	794	2.68	839	2.93	889	3.19	940	3.44	991	3.69	1041	3.94	1091	4.19	1140	4.43	--	--	--	--
5000	811	3.00	861	3.25	912	3.51	962	3.70	1013	4.01	1063	4.26	1113	4.50	1162	4.74	--	--	--	--

Standard Static Option with Motor rated at 2.4-hp
Medium Static Option with Motor rated at 3.7-hp
High Static Option with Motor rated at 5.25-hp
-- Exceeds recommended Blower speed

1. Blower performance includes gas heat exchangers and 2” filters. See STATIC RESISTANCE table for additional applications.

Note: See RPM SELECTION table to determine desired motor sheave setting and to determine the maximum continuous BHP.
kW = 0.929 x BHP

ZX14 (12.5 Ton) Side Duct

CFM	AVAILABLE EXTERNAL STATIC PRESSURE - IWG[1]																			
	0.2		0.4		0.6		0.8		1.0		1.2		1.4		1.6		1.8		2.0	
	RPM	BHP	RPM	BHP	RPM	BHP	RPM	BHP	RPM	BHP	RPM	BHP	RPM	BHP	RPM	BHP	RPM	BHP	RPM	BHP
3750	684	1.33	741	1.56	792	1.81	840	2.07	884	2.33	927	2.60	971	2.85	1017	3.09	1066	3.30	1121	3.49
3800	688	1.38	745	1.61	797	1.85	844	2.12	888	2.38	932	2.65	976	2.90	1021	3.14	1071	3.35	1125	3.54
4000	706	1.58	763	1.81	814	2.06	861	2.32	906	2.59	949	2.85	993	3.11	1039	3.35	1088	3.56	1142	3.74
4200	724	1.81	781	2.04	832	2.29	879	2.55	924	2.82	967	3.08	1011	3.34	1057	3.57	1106	3.79	1160	3.97
4400	742	2.06	799	2.29	850	2.54	897	2.80	942	3.06	985	3.33	1029	3.58	1075	3.82	1124	4.03	1178	4.22
4600	760	2.32	817	2.55	869	2.80	916	3.06	960	3.33	1004	3.59	1048	3.85	1093	4.08	1143	4.30	--	--
4800	779	2.60	836	2.83	888	3.08	935	3.34	979	3.61	1023	3.88	1067	4.13	1112	4.37	1162	4.58	--	--
5000	799	2.91	856	3.14	907	3.39	954	3.65	999	3.91	1042	4.18	1086	4.43	1132	4.67	--	--	--	--
5200	819	3.23	876	3.46	927	3.71	974	3.97	1019	4.23	1062	4.50	1106	4.75	1152	4.99	--	--	--	--
5400	839	3.57	**896**	**3.80**	953	4.04	995	4.31	1039	4.57	1083	4.84	1127	5.09	--	--	--	--	--	--
5600	**860**	**3.92**	**917**	**4.15**	969	4.40	1016	4.66	1060	4.93	1104	5.19	--	--	--	--	--	--	--	--
5800	**882**	**4.30**	**939**	**4.53**	990	4.77	1037	5.04	--	--	--	--	--	--	--	--	--	--	--	--
6000	**904**	**4.69**	961	4.92	1012	5.17	--	--	--	--	--	--	--	--	--	--	--	--	--	--

Standard Static Option with Motor rated at 2.9-hp
Medium Static Option with Motor rated at 3.7-hp
High Static Option with Motor rated at 5.25-hp
Bold Field-supplied BK95 x 1 fixed pulley (p/n 1074787) with Motor rated at 5.25-hp
-- Exceeds recommended Blower speed

1. Blower performance includes gas heat exchangers and 2” filters. See STATIC RESISTANCE table for additional applications.

Note: See RPM SELECTION table to determine desired motor sheave setting and to determine the maximum continuous BHP.
kW = 0.857 x BHP for Standard Static option, kW = 0.829 x BHP for Medium and High Static options

ZXA7, 08-14 Bottom Duct Application (Belt Drive)

ZXA7 (6.0 Ton) Bottom Duct

CFM	Available External Static																			
	0.2		0.4		0.6		0.8		1.0		1.2		1.4		1.6		1.8		2.0	
	RPM	BHP	RPM	BHP	RPM	BHP	RPM	BHP	RPM	BHP	RPM	BHP	RPM	BHP	RPM	BHP	RPM	BHP	RPM	BHP
1800	933	0.64	1000	0.79	1064	0.94	1126	1.09	1185	1.24	1243	1.38	1300	1.52	1356	1.64	1411	1.76	1466	1.86
1900	961	0.74	1028	0.89	1092	1.04	1153	1.19	1213	1.34	1271	1.49	1328	1.62	1384	1.75	1439	1.86	1494	1.97
2000	989	0.85	1055	1.00	1119	1.15	1181	1.31	1241	1.45	1299	1.60	1356	1.73	1411	1.86	1467	1.98	1521	2.08
2100	1017	0.97	1083	1.12	1147	1.27	1209	1.42	1269	1.57	1327	1.72	1384	1.85	1439	1.98	1495	2.09	1549	2.20
2200	1045	1.10	1112	1.25	1176	1.40	1238	1.55	1297	1.70	1355	1.84	1412	1.98	1468	2.10	1523	2.22	1578	2.32
2300	1075	1.23	1141	1.38	1205	1.53	1267	1.68	1327	1.83	1385	1.97	1441	2.11	1497	2.24	1552	2.35	1607	2.45
2400	1105	1.37	1171	1.52	1235	1.67	1297	1.82	1357	1.97	1415	2.11	1472	2.25	1527	2.38	1583	2.49	1637	2.59
2500	1136	1.52	1202	1.67	1266	1.82	1328	1.97	1388	2.12	1446	2.26	1503	2.40	1559	2.53	1614	2.64	--	--
2600	1168	1.67	1234	1.82	1298	1.97	1360	2.13	1420	2.27	1478	2.42	1535	2.55	1591	2.68	1638	2.80	--	--
2700	1201	1.84	1268	1.99	1332	2.14	1393	2.29	1453	2.44	1511	2.58	1568	2.72	1624	2.84	--	--	--	--
2800	1235	2.01	1302	2.16	1366	2.31	1428	2.46	1488	2.61	1546	2.75	1602	2.89	--	--	--	--	--	--
2900	1271	2.18	1338	2.33	1402	2.49	1463	2.64	1523	2.79	1581	2.93	1638	3.07	--	--	--	--	--	--
3000	1308	2.37	1374	2.52	1438	2.67	1500	2.82	1560	2.97	1618	3.12	--	--	--	--	--	--	--	--

Standard Static Option with Motor rated at 2.4-hp
Medium Static Option with Motor rated at 2.9-hp
High Static Option with Motor rated at 3.7-hp
-- Exceeds recommended Blower speed

ZX08 (7.5 Ton) Bottom Duct

CFM	AVAILABLE EXTERNAL STATIC PRESSURE - IWG[1]																			
	0.2		0.4		0.6		0.8		1.0		1.2		1.4		1.6		1.8		2.0	
	RPM	BHP	RPM	BHP	RPM	BHP	RPM	BHP	RPM	BHP	RPM	BHP	RPM	BHP	RPM	BHP	RPM	BHP	RPM	BHP
2250	577	0.50	636	0.68	693	0.86	749	1.03	803	1.21	856	1.39	908	1.57	959	1.74	1009	1.91	1059	2.07
2400	591	0.59	650	0.77	707	0.95	763	1.13	817	1.31	870	1.48	922	1.66	973	1.83	1023	2.00	1073	2.17
2600	611	0.73	670	0.91	727	1.09	782	1.27	836	1.44	889	1.62	941	1.80	992	1.97	1043	2.14	1092	2.31
2800	631	0.88	690	1.06	747	1.24	803	1.42	857	1.60	910	1.77	962	1.95	1013	2.12	1063	2.29	--	--
3000	653	1.05	711	1.23	768	1.41	824	1.59	878	1.76	931	1.94	983	2.12	1034	2.29	1084	2.46	--	--
3200	675	1.23	733	1.41	790	1.59	846	1.77	900	1.94	953	2.12	1005	2.30	1056	2.47	1100	2.64	--	--
3400	697	1.42	755	1.60	813	1.78	868	1.96	922	2.14	975	2.31	1027	2.49	1078	2.66	--	--	--	--
3600	719	1.63	778	1.80	835	1.98	891	2.16	945	2.34	998	2.52	1050	2.69	1100	2.87	--	--	--	--
3750	736	1.78	795	1.96	852	2.14	908	2.32	962	2.50	1015	2.68	1067	2.85	--	--	--	--	--	--

Standard Static Option with Motor rated at 2.4-hp
Medium Static Option with Motor rated at 2.9-hp
High Static Option with Motor rated at 3.7-hp
-- Exceeds recommended Blower speed

1. Blower performance includes gas heat exchangers and 2” filters. See STATIC RESISTANCE table for additional applications.

Note: See RPM SELECTION table to determine desired motor sheave setting and to determine the maximum continuous BHP.
kW = 0.929 x BHP

ZX09 (8.5 Ton) Bottom Duct

CFM	AVAILABLE EXTERNAL STATIC PRESSURE - IWG[1]																			
	0.2		0.4		0.6		0.8		1.0		1.2		1.4		1.6		1.8		2.0	
	RPM	BHP	RPM	BHP	RPM	BHP	RPM	BHP	RPM	BHP	RPM	BHP	RPM	BHP	RPM	BHP	RPM	BHP	RPM	BHP
2550	570	0.59	630	0.77	687	0.94	744	1.13	799	1.31	852	1.49	903	1.67	953	1.85	1002	2.01	1049	2.16
2600	573	0.63	632	0.80	690	0.98	747	1.16	801	1.34	855	1.53	906	1.71	956	1.88	1005	2.04	1052	2.19
2800	585	0.77	645	0.94	703	1.12	759	1.30	814	1.49	867	1.67	918	1.85	968	2.02	1017	2.18	1064	2.33
3000	599	0.92	658	1.10	716	1.27	773	1.46	827	1.64	880	1.82	932	2.00	982	2.18	1030	2.34	1077	2.49
3200	614	1.09	673	1.27	731	1.44	787	1.63	842	1.81	895	1.99	947	2.17	997	2.35	1045	2.51	1092	2.66
3400	630	1.28	690	1.45	747	1.62	804	1.81	859	1.99	912	2.18	963	2.35	1013	2.53	1062	2.69	--	--
3600	648	1.47	708	1.64	765	1.82	822	2.00	877	2.19	930	2.37	981	2.55	1031	2.72	1080	2.88	--	--
3800	668	1.67	727	1.84	785	2.02	841	2.20	896	2.39	949	2.57	1001	2.75	1051	2.92	1099	3.09	--	--
4000	689	1.89	748	2.06	806	2.23	863	2.42	917	2.60	971	2.79	1022	2.96	1072	3.14	--	--	--	--
4200	712	2.11	771	2.28	829	2.46	886	2.64	940	2.83	994	3.01	1045	3.19	1095	3.36	--	--	--	--
4250	718	2.17	777	2.34	842	2.52	892	2.70	946	2.88	1000	3.07	1051	3.24	1100	3.42	--	--	--	--

Standard Static Option with Motor rated at 2.4-hp
Medium Static Option with Motor rated at 2.4-hp
High Static Option with Motor rated at 3.7-hp

1. Blower performance includes gas heat exchangers and 2” filters. See STATIC RESISTANCE table for additional applications.

Note: See RPM SELECTION table to determine desired motor sheave setting and to determine the maximum continuous BHP.
kW = 0.929 x BHP

ZX12 (10 Ton) Bottom Duct

CFM	AVAILABLE EXTERNAL STATIC PRESSURE - IWG[1]																			
	0.2		0.4		0.6		0.8		1.0		1.2		1.4		1.6		1.8		2.0	
	RPM	BHP	RPM	BHP	RPM	BHP	RPM	BHP	RPM	BHP	RPM	BHP	RPM	BHP	RPM	BHP	RPM	BHP	RPM	BHP
3000	653	0.79	706	1.02	758	1.25	808	1.49	858	1.72	907	1.95	955	2.18	1003	2.40	1049	2.62	1095	2.82
3200	667	0.94	720	1.17	771	1.40	822	1.64	872	1.88	921	2.11	969	2.34	1016	2.56	1063	2.77	1109	2.97
3400	682	1.11	734	1.34	786	1.57	837	1.81	887	2.04	936	2.28	984	2.50	1031	2.73	1078	2.94	1124	3.14
3600	697	1.29	750	1.52	802	1.76	853	1.99	903	2.23	952	2.46	1000	2.69	1047	2.91	1094	3.12	1140	3.32
3800	714	1.50	767	1.73	819	1.96	870	2.20	920	2.43	969	2.67	1017	2.90	1064	3.12	1111	3.33	1157	3.53
4000	733	1.73	786	1.96	837	2.19	888	2.43	938	2.66	987	2.90	1035	3.12	1083	3.34	1129	3.56	1174	3.76
4200	753	1.98	806	2.21	857	2.44	908	2.68	958	2.91	1007	3.15	1055	3.37	1102	3.60	1149	3.81	--	--
4400	774	2.25	827	2.48	879	2.72	930	2.95	979	3.19	1028	3.42	1076	3.65	1124	3.87	1170	4.08	--	--
4600	797	2.55	850	2.78	902	3.02	952	3.25	1002	3.49	1051	3.72	1099	3.95	1147	4.17	--	--	--	--
4800	822	2.88	874	3.11	926	3.34	977	3.58	1027	3.81	1076	4.05	1124	4.27	1171	4.50	--	--	--	--
5000	848	3.23	901	3.46	952	3.69	1003	3.93	1053	4.16	1102	4.40	1150	4.62	--	--	--	--	--	--

Standard Static Option with Motor rated at 2.4-hp
Medium Static Option with Motor rated at 3.7-hp
High Static Option with Motor rated at 5.25-hp

1. Blower performance includes gas heat exchangers and 2” filters. See STATIC RESISTANCE table for additional applications.

Note: See RPM SELECTION table to determine desired motor sheave setting and to determine the maximum continuous BHP.
kW = 0.929 x BHP

ZX14 (12.5 Ton) Bottom Duct

CFM	AVAILABLE EXTERNAL STATIC PRESSURE - IWG[1]																			
	0.2		0.4		0.6		0.8		1.0		1.2		1.4		1.6		1.8		2.0	
	RPM	BHP	RPM	BHP	RPM	BHP	RPM	BHP	RPM	BHP	RPM	BHP	RPM	BHP	RPM	BHP	RPM	BHP	RPM	BHP
3750	715	1.46	762	1.68	810	1.91	858	2.13	907	2.36	957	2.58	1008	2.80	1060	3.02	1113	3.24	1167	3.46
3800	720	1.51	766	1.73	814	1.96	862	2.18	911	2.41	961	2.63	1012	2.85	1064	3.07	1117	3.29	1171	3.51
4000	737	1.72	784	1.94	832	2.17	880	2.39	929	2.62	979	2.84	1030	3.07	1082	3.29	1135	3.51	--	--
4200	756	1.95	803	2.17	851	2.40	899	2.63	948	2.85	998	3.07	1049	3.30	1101	3.52	1154	3.74	--	--
4400	777	2.20	824	2.42	871	2.65	920	2.87	969	3.10	1019	3.32	1069	3.55	1121	3.77	1174	3.98	--	--
4600	799	2.47	846	2.69	893	2.92	941	3.14	990	3.37	1040	3.59	1091	3.81	1143	4.04	--	--	--	--
4800	822	2.75	869	2.98	916	3.20	965	3.43	1014	3.65	1064	3.88	1114	4.10	1166	4.32	--	--	--	--
5000	846	3.06	893	3.28	941	3.51	989	3.73	1038	3.96	1088	4.18	1139	4.41	--	--	--	--	--	--
5200	872	3.39	919	3.61	966	3.83	1015	4.06	1064	4.28	1114	4.51	1164	4.73	--	--	--	--	--	--
5400	899	3.73	946	3.95	993	4.18	1042	4.40	1091	4.63	1141	4.85	--	--	--	--	--	--	--	--
5600	927	4.09	974	4.32	1021	4.54	1070	4.77	1119	4.99	1169	5.22	--	--	--	--	--	--	--	--
5800	956	4.47	1003	4.70	1051	4.92	1099	5.15	--	--	--	--	--	--	--	--	--	--	--	--
6000	987	4.87	1034	5.10	--	--	--	--	--	--	--	--	--	--	--	--	--	--	--	--

Standard Static Option with Motor rated at 2.4-hp
Medium Static Option with Motor rated at 3.7-hp
High Static Option with Motor rated at 5.25-hp

1. Blower performance includes gas heat exchangers and 2” filters. See STATIC RESISTANCE table for additional applications.

Note: See RPM SELECTION table to determine desired motor sheave setting and to determine the maximum continuous BHP.
kW = 0.857 x BHP for Standard Static option, kW = 0.829 x BHP for Medium and High Static options

ZY04-12 Side Duct Application (Belt Drive)

ZY04 (3.0 Ton) Side Duct

CFM	AVAILABLE EXTERNAL STATIC PRESSURE - IWG[1]																			
	0.2		0.4		0.6		0.8		1.0		1.2		1.4		1.6		1.8		2.0	
	RPM	BHP	RPM	BHP	RPM	BHP	RPM	BHP	RPM	BHP	RPM	BHP	RPM	BHP	RPM	BHP	RPM	BHP	RPM	BHP
900			874	0.31	972	0.40	1065	0.50	1153	0.60	1236	0.70	1315	0.80	1390	0.89	1460	0.97	1526	1.05
1000			887	0.36	985	0.45	1078	0.55	1165	0.65	1249	0.75	1328	0.85	1402	0.94	1472	1.03	1539	1.10
1100	797	0.33	900	0.42	998	0.51	1091	0.61	1179	0.71	1263	0.81	1341	0.91	1416	1.00	1486	1.08	1553	1.16
1200	813	0.40	916	0.48	1014	0.57	1107	0.67	1195	0.77	1279	0.87	1357	0.97	1432	1.06	1502	1.15	1569	1.22
1300	831	0.46	935	0.55	1033	0.64	1126	0.74	1214	0.84	1297	0.94	1376	1.03	1450	1.13	1520	1.21	1583	1.28
1400	852	0.53	956	0.61	1054	0.71	1146	0.80	1234	0.90	1318	1.00	1396	1.10	1471	1.19	1541	1.28	--	--
1500	876	0.59	979	0.68	1077	0.77	1170	0.87	1258	0.97	1341	1.07	1420	1.17	1494	1.26	1565	1.34	--	--

Medium Static Option with Motor rated at 2.4-hp
High Static Option with Motor rated at 2.9-hp
-- Exceeds recommended blower speed

1. Blower performance includes gas heat exchangers and 2” filters. See STATIC RESISTANCE table for additional applications.

Note: See RPM SELECTION table to determine desired motor sheave setting and to determine the maximum continuous BHP.
kW = 0.929 x BHP

ZY05 (4.0 Ton) Side Duct

CFM	AVAILABLE EXTERNAL STATIC PRESSURE - IWG[1]																			
	0.2		0.4		0.6		0.8		1.0		1.2		1.4		1.6		1.8		2.0	
	RPM	BHP	RPM	BHP	RPM	BHP	RPM	BHP	RPM	BHP	RPM	BHP	RPM	BHP	RPM	BHP	RPM	BHP	RPM	BHP
1200	840	0.30	927	0.41	1012	0.53	1096	0.65	1177	0.77	1257	0.89	1334	1.01	1411	1.12	1485	1.22	1558	1.31
1300	857	0.35	944	0.47	1029	0.59	1112	0.71	1194	0.83	1273	0.95	1351	1.07	1427	1.18	1502	1.28	1574	1.37
1400	875	0.42	962	0.53	1048	0.65	1131	0.77	1212	0.89	1292	1.01	1370	1.13	1446	1.24	1520	1.34	1593	1.43
1500	897	0.49	984	0.60	1069	0.72	1152	0.84	1233	0.96	1313	1.08	1391	1.20	1467	1.31	1542	1.41	--	--
1600	921	0.56	1008	0.67	1093	0.79	1176	0.91	1258	1.04	1337	1.16	1415	1.27	1491	1.38	1566	1.49	--	--
1700	948	0.64	1035	0.76	1120	0.87	1204	1.00	1285	1.12	1365	1.24	1442	1.36	1518	1.47	1593	1.57	--	--
1800	979	0.73	1066	0.85	1151	0.96	1234	1.08	1315	1.21	1395	1.33	1473	1.44	1549	1.56	--	--	--	--
1900	1012	0.83	1099	0.94	1185	1.06	1268	1.18	1349	1.30	1429	1.42	1507	1.54	1583	1.65	--	--	--	--
2000	1049	0.93	1136	1.04	1222	1.16	1305	1.28	1386	1.40	1466	1.52	1544	1.64	--	--	--	--	--	--

Medium Static Option with Motor rated at 2.4-hp
High Static Option with Motor rated at 2.9-hp
-- Exceeds recommended blower speed

1. Blower performance includes gas heat exchangers and 2” filters. See STATIC RESISTANCE table for additional applications.

Note: See RPM SELECTION table to determine desired motor sheave setting and to determine the maximum continuous BHP.
kW = 0.929 x BHP

ZY06 (5.0 Ton) Side Duct

CFM	AVAILABLE EXTERNAL STATIC PRESSURE - IWG[1]																			
	0.2		0.4		0.6		0.8		1.0		1.2		1.4		1.6		1.8		2.0	
	RPM	BHP	RPM	BHP	RPM	BHP	RPM	BHP	RPM	BHP	RPM	BHP	RPM	BHP	RPM	BHP	RPM	BHP	RPM	BHP
1500	810	0.49	883	0.60	954	0.70	1023	0.80	1089	0.91	1152	1.02	1213	1.14	1269	1.26	1323	1.40	1373	1.55
1600	831	0.58	904	0.68	975	0.79	1044	0.89	1110	1.00	1173	1.11	1233	1.22	1290	1.35	1344	1.49	1394	1.64
1700	854	0.66	927	0.77	998	0.87	1067	0.98	1133	1.08	1196	1.19	1256	1.31	1313	1.44	1367	1.57	1417	1.72
1800	878	0.75	952	0.86	1023	0.96	1091	1.07	1157	1.17	1221	1.28	1281	1.40	1338	1.52	1391	1.66	1441	1.81
1900	904	0.84	977	0.95	1048	1.05	1117	1.16	1183	1.26	1246	1.37	1306	1.49	1363	1.61	1417	1.75	1467	1.90
2000	931	0.93	1004	1.04	1075	1.15	1144	1.25	1210	1.36	1273	1.47	1333	1.58	1390	1.71	1444	1.84	1494	1.99
2100	959	1.03	1032	1.14	1103	1.24	1172	1.35	1238	1.45	1301	1.56	1361	1.68	1418	1.81	1472	1.94	1522	2.09
2200	988	1.13	1061	1.24	1132	1.35	1201	1.45	1267	1.56	1330	1.67	1390	1.78	1447	1.91	1501	2.04	1550	2.19
2300	1017	1.24	1091	1.35	1162	1.45	1230	1.56	1296	1.66	1359	1.77	1420	1.89	1477	2.02	1530	2.15	1580	2.30
2400	1047	1.36	1121	1.46	1192	1.57	1260	1.67	1326	1.78	1390	1.89	1450	2.01	1507	2.13	1560	2.27	--	--
2500	1078	1.48	1151	1.58	1222	1.69	1291	1.79	1357	1.90	1420	2.01	1480	2.13	1537	2.25	1591	2.39	--	--

Medium Static Option with Motor rated at 2.4-hp
High Static Option with Motor rated at 2.9-hp
-- Exceeds recommended blower speed

1. Blower performance includes gas heat exchangers and 2” filters. See STATIC RESISTANCE table for additional applications.

Note: See RPM SELECTION table to determine desired motor sheave setting and to determine the maximum continuous BHP.
kW = 0.857 x BHP

ZY07 (6.0 Ton) Side Duct

CFM	AVAILABLE EXTERNAL STATIC PRESSURE - IWG[1]																			
	0.2		0.4		0.6		0.8		1.0		1.2		1.4		1.6		1.8		2.0	
	RPM	BHP	RPM	BHP	RPM	BHP	RPM	BHP	RPM	BHP	RPM	BHP	RPM	BHP	RPM	BHP	RPM	BHP	RPM	BHP
1800	521	0.27	583	0.44	644	0.63	703	0.81	759	0.99	814	1.17	866	1.34	916	1.51	964	1.67	1010	1.83
1900	529	0.31	591	0.49	651	0.67	710	0.85	767	1.03	821	1.21	874	1.39	924	1.56	972	1.72	1017	1.87
2000	536	0.36	598	0.54	659	0.72	718	0.90	774	1.08	829	1.26	881	1.44	931	1.61	979	1.77	1025	1.92
2100	544	0.42	606	0.59	667	0.77	725	0.95	782	1.14	836	1.32	889	1.49	939	1.66	987	1.82	1032	1.97
2200	551	0.47	614	0.65	674	0.83	733	1.01	789	1.19	844	1.37	896	1.55	947	1.72	994	1.88	1040	2.03
2300	559	0.53	622	0.71	682	0.89	741	1.07	797	1.25	852	1.43	904	1.61	954	1.77	1002	1.94	1048	2.09
2400	567	0.59	630	0.77	690	0.95	749	1.13	805	1.31	860	1.49	912	1.67	962	1.84	1010	2.00	1056	2.15
2500	575	0.66	638	0.83	698	1.01	757	1.20	813	1.38	868	1.56	920	1.73	970	1.90	1018	2.06	1064	2.22
2600	584	0.73	646	0.90	707	1.08	765	1.26	822	1.45	876	1.63	929	1.80	979	1.97	1027	2.13	1072	2.28
2700	592	0.80	655	0.97	715	1.15	774	1.34	830	1.52	885	1.70	937	1.87	987	2.04	1035	2.20	1081	2.36
2800	601	0.87	664	1.05	724	1.23	783	1.41	839	1.59	894	1.77	946	1.95	996	2.12	1044	2.28	1090	2.43
2900	610	0.95	673	1.13	733	1.31	792	1.49	848	1.67	903	1.85	955	2.03	1005	2.20	1053	2.36	1099	2.51
3000	619	1.03	682	1.21	742	1.39	801	1.57	858	1.75	912	1.93	964	2.11	1015	2.28	1063	2.44	--	--

Standard Static Option with Motor rated at 2.4-hp
Medium Static Option with Motor rated at 2.9-hp
High Static Option with Motor rated at 3.7-hp
-- Exceeds recommended blower speed

1. Blower performance includes gas heat exchangers and 2” filters. See STATIC RESISTANCE table for additional applications.

Note: See RPM SELECTION table to determine desired motor sheave setting and to determine the maximum continuous BHP.
kW = 0.929 x BHP

ZYA7 (6.0 Ton) Side Duct

CFM	AVAILABLE EXTERNAL STATIC PRESSURE - IWG[1]																			
	0.2		0.4		0.6		0.8		1.0		1.2		1.4		1.6		1.8		2.0	
	RPM	BHP	RPM	BHP	RPM	BHP	RPM	BHP	RPM	BHP	RPM	BHP	RPM	BHP	RPM	BHP	RPM	BHP	RPM	BHP
1800	521	0.27	583	0.44	644	0.63	703	0.81	759	0.99	814	1.17	866	1.34	916	1.51	964	1.67	1010	1.83
1900	529	0.31	591	0.49	651	0.67	710	0.85	767	1.03	821	1.21	874	1.39	924	1.56	972	1.72	1017	1.87
2000	536	0.36	598	0.54	659	0.72	718	0.90	774	1.08	829	1.26	881	1.44	931	1.61	979	1.77	1025	1.92
2100	544	0.42	606	0.59	667	0.77	725	0.95	782	1.14	836	1.32	889	1.49	939	1.66	987	1.82	1032	1.97
2200	551	0.47	614	0.65	674	0.83	733	1.01	789	1.19	844	1.37	896	1.55	947	1.72	994	1.88	1040	2.03
2300	559	0.53	622	0.71	682	0.89	741	1.07	797	1.25	852	1.43	904	1.61	954	1.77	1002	1.94	1048	2.09
2400	567	0.59	630	0.77	690	0.95	749	1.13	805	1.31	860	1.49	912	1.67	962	1.84	1010	2.00	1056	2.15
2500	575	0.66	638	0.83	698	1.01	757	1.20	813	1.38	868	1.56	920	1.73	970	1.90	1018	2.06	1064	2.22
2600	584	0.73	646	0.90	707	1.08	765	1.26	822	1.45	876	1.63	929	1.80	979	1.97	1027	2.13	1072	2.28
2700	592	0.80	655	0.97	715	1.15	774	1.34	830	1.52	885	1.70	937	1.87	987	2.04	1035	2.20	1081	2.36
2800	601	0.87	664	1.05	724	1.23	783	1.41	839	1.59	894	1.77	946	1.95	996	2.12	1044	2.28	1090	2.43
2900	610	0.95	673	1.13	733	1.31	792	1.49	848	1.67	903	1.85	955	2.03	1005	2.20	1053	2.36	1099	2.51
3000	619	1.03	682	1.21	742	1.39	801	1.57	858	1.75	912	1.93	964	2.11	1015	2.28	1063	2.44	--	--

Standard Static Option with Motor rated at 2.4-hp
Medium Static Option with Motor rated at 2.9-hp
High Static Option with Motor rated at 3.7-hp
-- Exceeds recommended blower speed

1. Blower performance includes gas heat exchangers and 2” filters. See STATIC RESISTANCE table for additional applications.

Note: See RPM SELECTION table to determine desired motor sheave setting and to determine the maximum continuous BHP.
kW = 0.929 x BHP

ZY08 (7.5 Ton) Side Duct

CFM	AVAILABLE EXTERNAL STATIC PRESSURE - IWG[1]																			
	0.2		0.4		0.6		0.8		1.0		1.2		1.4		1.6		1.8		2.0	
	RPM	BHP	RPM	BHP	RPM	BHP	RPM	BHP	RPM	BHP	RPM	BHP	RPM	BHP	RPM	BHP	RPM	BHP	RPM	BHP
2250	547	0.39	610	0.60	670	0.81	727	1.01	783	1.21	836	1.41	888	1.59	939	1.78	989	1.96	1038	2.13
2400	556	0.47	619	0.69	679	0.90	736	1.10	792	1.30	845	1.49	897	1.68	948	1.86	998	2.04	1047	2.22
2600	568	0.60	631	0.81	691	1.02	749	1.22	804	1.42	857	1.61	909	1.80	960	1.99	1010	2.17	1059	2.34
2800	581	0.73	644	0.95	704	1.16	762	1.36	817	1.56	871	1.75	923	1.94	973	2.13	1023	2.31	1073	2.48
3000	595	0.89	658	1.10	718	1.31	776	1.51	831	1.71	885	1.91	937	2.09	988	2.28	1038	2.46	1087	2.63
3200	610	1.05	673	1.27	733	1.48	791	1.68	846	1.88	900	2.07	952	2.26	1003	2.44	1053	2.62	--	--
3400	627	1.23	689	1.45	750	1.66	807	1.86	863	2.06	916	2.25	968	2.44	1019	2.62	1069	2.80	--	--
3600	644	1.42	707	1.64	767	1.85	824	2.05	880	2.25	933	2.44	985	2.63	1036	2.82	1086	3.00	--	--
3750	657	1.58	720	1.79	780	2.00	838	2.20	893	2.40	947	2.60	999	2.78	1049	2.97	1099	3.15	--	--

Standard Static Option with Motor rated at 2.4-hp
Medium Static Option with Motor rated at 2.4-hp
High Static Option with Motor rated at 3.7-hp
-- Exceeds recommended blower speed

1. Blower performance includes gas heat exchangers and 2” filters. See STATIC RESISTANCE table for additional applications.

Note: See RPM SELECTION table to determine desired motor sheave setting and to determine the maximum continuous BHP.
kW = 0.929 x BHP

ZY09 (8.5 Ton) Side Duct

CFM	AVAILABLE EXTERNAL STATIC PRESSURE - IWG[1]																			
	0.2		0.4		0.6		0.8		1.0		1.2		1.4		1.6		1.8		2.0	
	RPM	BHP	RPM	BHP	RPM	BHP	RPM	BHP	RPM	BHP	RPM	BHP	RPM	BHP	RPM	BHP	RPM	BHP	RPM	BHP
2550	565	0.56	628	0.78	688	0.99	745	1.19	801	1.39	854	1.58	906	1.77	957	1.95	1007	2.13	1056	2.31
2600	568	0.60	631	0.81	691	1.02	749	1.22	804	1.42	857	1.61	909	1.80	960	1.99	1010	2.17	1059	2.34
2800	581	0.73	644	0.95	704	1.16	762	1.36	817	1.56	871	1.75	923	1.94	973	2.13	1023	2.31	1073	2.48
3000	595	0.89	658	1.10	718	1.31	776	1.51	831	1.71	885	1.91	937	2.09	988	2.28	1038	2.46	1087	2.63
3200	610	1.05	673	1.27	733	1.48	791	1.68	846	1.88	900	2.07	952	2.26	1003	2.44	1053	2.62	1100	2.80
3400	627	1.23	689	1.45	750	1.66	807	1.86	863	2.06	916	2.25	968	2.44	1019	2.62	1069	2.80	--	--
3600	644	1.42	707	1.64	767	1.85	824	2.05	880	2.25	933	2.44	985	2.63	1036	2.82	1086	3.00	--	--
3800	662	1.63	725	1.84	785	2.05	842	2.26	898	2.46	951	2.65	1003	2.84	1054	3.02	1100	3.20	--	--
4000	681	1.85	744	2.06	804	2.27	861	2.47	917	2.67	970	2.87	1022	3.05	1073	3.24	--	--	--	--
4200	701	2.08	764	2.29	**824**	**2.50**	881	2.70	937	2.90	990	3.09	1042	3.28	1093	3.47	--	--	--	--
4250	706	2.14	769	2.35	**829**	**2.56**	887	2.76	942	2.96	996	3.15	1048	3.34	1098	3.53	--	--	--	--

Standard Static Option with Motor rated at 2.4-hp
Medium Static Option with Motor rated at 2.4-hp
High Static Option with Motor rated at 3.7-hp
Bold Field-supplied AK79 x 1 fixed pulley (p/n 9381) with Motor rated at 3.7-hp
-- Exceeds recommended blower speed

1. Blower performance includes gas heat exchangers and 2” filters. See STATIC RESISTANCE table for additional applications.

Note: See RPM SELECTION table to determine desired motor sheave setting and to determine the maximum continuous BHP.
kW = 0.929 x BHP

ZY12 (10 Ton) Side Duct

CFM	AVAILABLE EXTERNAL STATIC PRESSURE - IWG[1]																			
	0.2		0.4		0.6		0.8		1.0		1.2		1.4		1.6		1.8		2.0	
	RPM	BHP	RPM	BHP	RPM	BHP	RPM	BHP	RPM	BHP	RPM	BHP	RPM	BHP	RPM	BHP	RPM	BHP	RPM	BHP
3000	653	0.79	706	1.02	758	1.25	808	1.49	858	1.72	907	1.95	955	2.18	1003	2.40	1049	2.62	1095	2.82
3200	667	0.94	720	1.17	771	1.40	822	1.64	872	1.88	921	2.11	969	2.34	1016	2.56	1063	2.77	1109	2.97
3400	682	1.11	734	1.34	786	1.57	837	1.81	887	2.04	936	2.28	984	2.50	1031	2.73	1078	2.94	1124	3.14
3600	697	1.29	750	1.52	802	1.76	853	1.99	903	2.23	952	2.46	1000	2.69	1047	2.91	1094	3.12	1140	3.32
3800	714	1.50	767	1.73	819	1.96	870	2.20	920	2.43	969	2.67	1017	2.90	1064	3.12	1111	3.33	1157	3.53
4000	733	1.73	786	1.96	837	2.19	888	2.43	938	2.66	987	2.90	1035	3.12	1083	3.34	1129	3.56	1174	3.76
4200	753	1.98	806	2.21	857	2.44	908	2.68	958	2.91	1007	3.15	1055	3.37	1102	3.60	1149	3.81	--	--
4400	774	2.25	827	2.48	879	2.72	930	2.95	979	3.19	1028	3.42	1076	3.65	1124	3.87	1170	4.08	--	--
4600	797	2.55	850	2.78	902	3.02	952	3.25	1002	3.49	1051	3.72	1099	3.95	1147	4.17	--	--	--	--
4800	822	2.88	874	3.11	926	3.34	977	3.58	1027	3.81	1076	4.05	1124	4.27	1171	4.50	--	--	--	--
5000	848	3.23	901	3.46	952	3.69	1003	3.93	1053	4.16	1102	4.40	1150	4.62	--	--	--	--	--	--

Standard Static Option with Motor rated at 2.4-hp
Medium Static Option with Motor rated at 3.7-hp
High Static Option with Motor rated at 5.25-hp
-- Exceeds recommended blower speed

1. Blower performance includes gas heat exchangers and 2” filters. See STATIC RESISTANCE table for additional applications.

Note: See RPM SELECTION table to determine desired motor sheave setting and to determine the maximum continuous BHP.
kW = 0.929 x BHP

ZY04-12 Bottom Duct Application (Belt Drive)

ZY04 (3.0 Ton) Bottom Duct

CFM	AVAILABLE EXTERNAL STATIC PRESSURE - IWG[1]																			
	0.2		0.4		0.6		0.8		1.0		1.2		1.4		1.6		1.8		2.0	
	RPM	BHP	RPM	BHP	RPM	BHP	RPM	BHP	RPM	BHP	RPM	BHP	RPM	BHP	RPM	BHP	RPM	BHP	RPM	BHP
900			878	0.26	976	0.37	1070	0.47	1161	0.58	1247	0.67	1329	0.76	1405	0.85	1477	0.93	1543	1.00
1000	792	0.20	894	0.31	992	0.42	1087	0.52	1177	0.62	1263	0.72	1345	0.81	1422	0.90	1493	0.98	1560	1.05
1100	810	0.26	912	0.37	1010	0.47	1104	0.58	1195	0.68	1281	0.77	1363	0.87	1439	0.95	1511	1.03	1577	1.11
1200	829	0.32	931	0.43	1029	0.54	1124	0.64	1214	0.74	1300	0.84	1382	0.93	1459	1.02	1530	1.10	1593	1.17
1300	850	0.39	952	0.50	1050	0.61	1145	0.71	1235	0.81	1321	0.91	1403	1.00	1480	1.09	1552	1.17	--	--
1400	874	0.47	975	0.58	1073	0.69	1168	0.79	1258	0.89	1344	0.99	1426	1.08	1503	1.17	1575	1.25	--	--
1500	899	0.56	1000	0.67	1098	0.77	1193	0.88	1283	0.98	1370	1.07	1451	1.17	1528	1.25	1600	1.33	--	--

Medium Static Option with Motor rated at 2.4-hp
High Static Option with Motor rated at 2.9-hp
-- Exceeds recommended blower speed

1. Blower performance includes gas heat exchangers and 2” filters. See STATIC RESISTANCE table for additional applications.

Note: See RPM SELECTION table to determine desired motor sheave setting and to determine the maximum continuous BHP.
kW = 0.929 x BHP

ZY05 (4.0 Ton) Bottom Duct

CFM	AVAILABLE EXTERNAL STATIC PRESSURE - IWG[1]																			
	0.2		0.4		0.6		0.8		1.0		1.2		1.4		1.6		1.8		2.0	
	RPM	BHP	RPM	BHP	RPM	BHP	RPM	BHP	RPM	BHP	RPM	BHP	RPM	BHP	RPM	BHP	RPM	BHP	RPM	BHP
1200	840	0.37	929	0.46	1016	0.56	1101	0.68	1184	0.80	1265	0.93	1345	1.04	1423	1.14	1500	1.22	1576	1.28
1300	858	0.43	947	0.52	1035	0.62	1120	0.74	1203	0.86	1284	0.99	1364	1.10	1442	1.20	1519	1.28	1593	1.34
1400	879	0.49	968	0.58	1055	0.69	1140	0.81	1224	0.93	1305	1.05	1385	1.17	1463	1.27	1540	1.35	--	--
1500	903	0.56	992	0.65	1079	0.76	1164	0.88	1247	1.00	1328	1.12	1408	1.24	1486	1.34	1563	1.42	--	--
1600	929	0.64	1018	0.73	1105	0.83	1190	0.95	1273	1.07	1354	1.20	1434	1.31	1512	1.41	1589	1.49	--	---
1700	957	0.72	1047	0.81	1134	0.91	1219	1.03	1302	1.15	1383	1.28	1463	1.39	1541	1.49	--	--	--	--
1800	989	0.80	1078	0.89	1165	1.00	1250	1.12	1333	1.24	1415	1.36	1494	1.47	1572	1.58	--	--	--	--
1900	1023	0.89	1112	0.98	1199	1.08	1284	1.20	1367	1.33	1449	1.45	1528	1.56	--	--	--	--	--	--
2000	1059	0.98	1149	1.07	1236	1.18	1321	1.29	1404	1.42	1485	1.54	1565	1.65	--	--	--	--	--	--

Medium Static Option with Motor rated at 2.4-hp
High Static Option with Motor rated at 2.9-hp
-- Exceeds recommended blower speed

1. Blower performance includes gas heat exchangers and 2” filters. See STATIC RESISTANCE table for additional applications.

Note: See RPM SELECTION table to determine desired motor sheave setting and to determine the maximum continuous BHP.
kW = 0.929 x BHP

ZY06 (5.0 Ton) Bottom Duct

CFM	AVAILABLE EXTERNAL STATIC PRESSURE - IWG[1]																			
	0.2		0.4		0.6		0.8		1.0		1.2		1.4		1.6		1.8		2.0	
	RPM	BHP	RPM	BHP	RPM	BHP	RPM	BHP	RPM	BHP	RPM	BHP	RPM	BHP	RPM	BHP	RPM	BHP	RPM	BHP
1500	840	0.48	910	0.58	977	0.67	1042	0.77	1106	0.87	1166	0.98	1225	1.08	1280	1.19	1334	1.30	1384	1.41
1600	866	0.55	935	0.65	1003	0.74	1068	0.84	1131	0.94	1192	1.04	1250	1.15	1306	1.26	1359	1.37	1410	1.48
1700	892	0.63	961	0.72	1029	0.82	1094	0.92	1157	1.02	1218	1.12	1276	1.23	1332	1.33	1385	1.44	1436	1.56
1800	918	0.71	987	0.81	1055	0.90	1120	1.00	1183	1.10	1244	1.21	1302	1.31	1358	1.42	1411	1.53	1462	1.64
1900	944	0.80	1014	0.90	1081	1.00	1146	1.09	1209	1.19	1270	1.30	1329	1.40	1384	1.51	1438	1.62	1488	1.73
2000	971	0.90	1041	1.00	1108	1.09	1174	1.19	1237	1.29	1297	1.39	1356	1.50	1412	1.61	1465	1.72	1516	1.83
2100	999	1.01	1069	1.10	1136	1.20	1202	1.30	1265	1.40	1326	1.50	1384	1.60	1440	1.71	1493	1.82	1544	1.93
2200	1028	1.12	1098	1.21	1165	1.31	1231	1.41	1294	1.51	1355	1.61	1413	1.72	1469	1.82	1522	1.93	1573	2.05
2300	1058	1.24	1128	1.33	1195	1.43	1261	1.53	1324	1.63	1385	1.73	1443	1.83	1499	1.94	1552	2.05	--	--
2400	1090	1.36	1159	1.46	1227	1.55	1292	1.65	1355	1.75	1416	1.85	1474	1.96	1530	2.07	1583	2.18	--	--
2500	1122	1.49	1191	1.59	1259	1.68	1324	1.78	1387	1.88	1448	1.98	1506	2.09	1562	2.20	1615	2.31	--	--

Medium Static Option with Motor rated at 2.4-hp
High Static Option with Motor rated at 2.9-hp
-- Exceeds recommended blower speed

1. Blower performance includes gas heat exchangers and 2” filters. See STATIC RESISTANCE table for additional applications.

Note: See RPM SELECTION table to determine desired motor sheave setting and to determine the maximum continuous BHP.
kW = 0.857 x BHP

ZY07 (6.0 Ton) Bottom Duct

CFM	AVAILABLE EXTERNAL STATIC PRESSURE - IWG[1]																			
	0.2		0.4		0.6		0.8		1.0		1.2		1.4		1.6		1.8		2.0	
	RPM	BHP	RPM	BHP	RPM	BHP	RPM	BHP	RPM	BHP	RPM	BHP	RPM	BHP	RPM	BHP	RPM	BHP	RPM	BHP
1800	525	0.31	590	0.48	653	0.65	713	0.82	770	0.98	825	1.15	878	1.31	928	1.48	976	1.65	1022	1.83
1900	534	0.36	599	0.53	661	0.71	721	0.87	779	1.03	834	1.20	886	1.36	936	1.53	984	1.70	1030	1.88
2000	542	0.41	607	0.59	670	0.76	730	0.93	787	1.09	842	1.25	895	1.42	945	1.58	993	1.75	1039	1.93
2100	551	0.47	616	0.65	678	0.82	738	0.99	796	1.15	850	1.31	903	1.47	953	1.64	1001	1.81	1047	1.99
2200	559	0.53	624	0.71	687	0.88	747	1.05	804	1.21	859	1.37	912	1.54	962	1.70	1010	1.88	1056	2.05
2300	568	0.60	634	0.78	696	0.95	756	1.11	813	1.28	868	1.44	921	1.60	971	1.77	1019	1.94	1065	2.12
2400	578	0.66	643	0.84	705	1.01	765	1.18	823	1.34	878	1.51	930	1.67	981	1.84	1029	2.01	1074	2.19
2500	588	0.74	653	0.91	715	1.08	775	1.25	833	1.41	888	1.58	940	1.74	991	1.91	1039	2.08	1084	2.26
2600	598	0.81	663	0.99	725	1.16	785	1.32	843	1.49	898	1.65	950	1.81	1001	1.98	1049	2.15	1094	2.33
2700	609	0.88	674	1.06	736	1.23	796	1.40	853	1.56	908	1.72	961	1.89	1011	2.05	1059	2.23	--	--
2800	620	0.96	685	1.14	747	1.31	807	1.47	864	1.64	919	1.80	972	1.96	1022	2.13	1070	2.30	--	--
2900	631	1.04	696	1.22	759	1.39	819	1.55	876	1.72	931	1.88	984	2.04	1034	2.21	1082	2.38	--	--
3000	643	1.12	708	1.30	771	1.47	830	1.64	888	1.80	943	1.96	996	2.12	1046	2.29	1094	2.46	--	--

Standard Static Option with Motor rated at 2.4-hp
Medium Static Option with Motor rated at 2.9-hp
High Static Option with Motor rated at 3.7-hp
-- Exceeds recommended blower speed

1. Blower performance includes gas heat exchangers and 2” filters. See STATIC RESISTANCE table for additional applications.

Note: See RPM SELECTION table to determine desired motor sheave setting and to determine the maximum continuous BHP.
kW = 0.929 x BHP

ZYA7 (6.0 Ton) Bottom Duct

CFM	AVAILABLE EXTERNAL STATIC PRESSURE - IWG[1]																			
	0.2		0.4		0.6		0.8		1.0		1.2		1.4		1.6		1.8		2.0	
	RPM	BHP	RPM	BHP	RPM	BHP	RPM	BHP	RPM	BHP	RPM	BHP	RPM	BHP	RPM	BHP	RPM	BHP	RPM	BHP
1800	525	0.31	590	0.48	653	0.65	713	0.82	770	0.98	825	1.15	878	1.31	928	1.48	976	1.65	1022	1.83
1900	534	0.36	599	0.53	661	0.71	721	0.87	779	1.03	834	1.20	886	1.36	936	1.53	984	1.70	1030	1.88
2000	542	0.41	607	0.59	670	0.76	730	0.93	787	1.09	842	1.25	895	1.42	945	1.58	993	1.75	1039	1.93
2100	551	0.47	616	0.65	678	0.82	738	0.99	796	1.15	850	1.31	903	1.47	953	1.64	1001	1.81	1047	1.99
2200	559	0.53	624	0.71	687	0.88	747	1.05	804	1.21	859	1.37	912	1.54	962	1.70	1010	1.88	1056	2.05
2300	568	0.60	634	0.78	696	0.95	756	1.11	813	1.28	868	1.44	921	1.60	971	1.77	1019	1.94	1065	2.12
2400	578	0.66	643	0.84	705	1.01	765	1.18	823	1.34	878	1.51	930	1.67	981	1.84	1029	2.01	1074	2.19
2500	588	0.74	653	0.91	715	1.08	775	1.25	833	1.41	888	1.58	940	1.74	991	1.91	1039	2.08	1084	2.26
2600	598	0.81	663	0.99	725	1.16	785	1.32	843	1.49	898	1.65	950	1.81	1001	1.98	1049	2.15	1094	2.33
2700	609	0.88	674	1.06	736	1.23	796	1.40	853	1.56	908	1.72	961	1.89	1011	2.05	1059	2.23	--	--
2800	620	0.96	685	1.14	747	1.31	807	1.47	864	1.64	919	1.80	972	1.96	1022	2.13	1070	2.30	--	--
2900	631	1.04	696	1.22	759	1.39	819	1.55	876	1.72	931	1.88	984	2.04	1034	2.21	1082	2.38	--	--
3000	643	1.12	708	1.30	771	1.47	830	1.64	888	1.80	943	1.96	996	2.12	1046	2.29	1094	2.46	--	--

Standard Static Option with Motor rated at 2.4-hp
Medium Static Option with Motor rated at 2.9-hp
High Static Option with Motor rated at 3.7-hp
-- Exceeds recommended blower speed

1. Blower performance includes gas heat exchangers and 2” filters. See STATIC RESISTANCE table for additional applications.

Note: See RPM SELECTION table to determine desired motor sheave setting and to determine the maximum continuous BHP.
kW = 0.929 x BHP

ZY08 (7.5 Ton) Bottom Duct

CFM	AVAILABLE EXTERNAL STATIC PRESSURE - IWG[1]																			
	0.2		0.4		0.6		0.8		1.0		1.2		1.4		1.6		1.8		2.0	
	RPM	BHP	RPM	BHP	RPM	BHP	RPM	BHP	RPM	BHP	RPM	BHP	RPM	BHP	RPM	BHP	RPM	BHP	RPM	BHP
2250	556	0.45	621	0.65	683	0.83	742	1.00	798	1.18	852	1.34	904	1.51	954	1.69	1003	1.87	1050	2.06
2400	567	0.53	632	0.73	694	0.91	753	1.09	809	1.26	863	1.43	914	1.60	964	1.77	1013	1.95	1060	2.14
2600	580	0.65	646	0.85	707	1.03	766	1.21	823	1.38	876	1.55	928	1.72	978	1.89	1027	2.07	1074	2.27
2800	595	0.79	660	0.99	722	1.17	780	1.35	837	1.52	890	1.69	942	1.86	992	2.03	1041	2.21	1088	2.40
3000	609	0.94	674	1.14	736	1.32	795	1.50	851	1.67	905	1.83	957	2.00	1007	2.18	1056	2.36	1100	2.55
3200	625	1.10	690	1.30	752	1.48	810	1.66	867	1.83	921	2.00	972	2.17	1022	2.34	1071	2.52	--	--
3400	641	1.28	706	1.47	768	1.66	827	1.83	883	2.00	937	2.17	989	2.34	1039	2.52	1087	2.70	'--	--
3600	658	1.47	723	1.66	785	1.85	844	2.02	900	2.19	954	2.36	1006	2.53	1056	2.70	1100	2.89	--	--
3750	672	1.61	737	1.81	799	1.99	858	2.17	914	2.34	968	2.51	1019	2.68	1069	2.85	--	--	--	--

Standard Static Option with Motor rated at 2.4-hp
Medium Static Option with Motor rated at 2.4-hp
High Static Option with Motor rated at 3.7-hp
-- Exceeds recommended blower speed

1. Blower performance includes gas heat exchangers and 2” filters. See STATIC RESISTANCE table for additional applications.

Note: See RPM SELECTION table to determine desired motor sheave setting and to determine the maximum continuous BHP.
kW = 0.929 x BHP

ZY09 (8.5 Ton) Bottom Duct

CFM	AVAILABLE EXTERNAL STATIC PRESSURE - IWG[1]																			
	0.2		0.4		0.6		0.8		1.0		1.2		1.4		1.6		1.8		2.0	
	RPM	BHP	RPM	BHP	RPM	BHP	RPM	BHP	RPM	BHP	RPM	BHP	RPM	BHP	RPM	BHP	RPM	BHP	RPM	BHP
2550	577	0.62	642	0.82	704	1.00	763	1.18	819	1.35	873	1.52	925	1.69	975	1.86	1023	2.04	1071	2.23
2600	580	0.65	646	0.85	707	1.03	766	1.21	823	1.38	876	1.55	928	1.72	978	1.89	1027	2.07	1074	2.27
2800	595	0.79	660	0.99	722	1.17	780	1.35	837	1.52	890	1.69	942	1.86	992	2.03	1041	2.21	1088	2.40
3000	609	0.94	674	1.14	736	1.32	795	1.50	851	1.67	905	1.83	957	2.00	1007	2.18	1056	2.36	1103	2.55
3200	625	1.10	690	1.30	752	1.48	810	1.66	867	1.83	921	2.00	972	2.17	1022	2.34	1071	2.52	--	--
3400	641	1.28	706	1.47	768	1.66	827	1.83	883	2.00	937	2.17	989	2.34	1039	2.52	1087	2.70	--	--
3600	658	1.47	723	1.66	785	1.85	844	2.02	900	2.19	954	2.36	1006	2.53	1056	2.70	1104	2.89	--	--
3800	676	1.67	742	1.86	803	2.04	862	2.22	918	2.39	972	2.56	1024	2.73	1074	2.90	--	--	--	--
4000	696	1.88	761	2.07	823	2.26	882	2.43	938	2.60	992	2.77	1043	2.94	1093	3.12	--	--	--	--
4200	716	2.10	781	2.29	**843**	**2.48**	902	2.65	958	2.82	1012	2.99	1064	3.16	1114	3.34	--	--	--	--
4250	721	2.16	786	2.35	848	2.53	907	2.71	963	2.88	1017	3.05	1069	3.22	1119	3.39	--	--	--	--

Standard Static Option with Motor rated at 2.4-hp
Medium Static Option with Motor rated at 2.4-hp
High Static Option with Motor rated at 3.7-hp
Bold Field-supplied AK79 x 1 fixed pulley (p/n 9381) with Motor rated at 3.7-hp
-- Exceeds recommended blower speed

1. Blower performance includes gas heat exchangers and 2” filters. See STATIC RESISTANCE table for additional applications.

Note: See RPM SELECTION table to determine desired motor sheave setting and to determine the maximum continuous BHP.
kW = 0.929 x BHP

ZY12 (10 Ton) Bottom Duct

CFM	AVAILABLE EXTERNAL STATIC PRESSURE - IWG[1]																			
	0.2		0.4		0.6		0.8		1.0		1.2		1.4		1.6		1.8		2.0	
	RPM	BHP	RPM	BHP	RPM	BHP	RPM	BHP	RPM	BHP	RPM	BHP	RPM	BHP	RPM	BHP	RPM	BHP	RPM	BHP
2600	626	0.50	679	0.73	731	0.97	782	1.20	831	1.44	880	1.67	928	1.90	976	2.12	1022	2.33	1068	2.53
2800	639	0.64	692	0.87	744	1.11	795	1.34	845	1.58	894	1.81	942	2.04	989	2.26	1036	2.47	1082	2.67
3000	653	0.79	706	1.02	758	1.25	808	1.49	858	1.72	907	1.95	955	2.18	1003	2.40	1049	2.62	1095	2.82
3200	667	0.94	720	1.17	771	1.40	822	1.64	872	1.88	921	2.11	969	2.34	1016	2.56	1063	2.77	1109	2.97
3400	682	1.11	734	1.34	786	1.57	837	1.81	887	2.04	936	2.28	984	2.50	1031	2.73	1078	2.94	1124	3.14
3600	697	1.29	750	1.52	802	1.76	853	1.99	903	2.23	952	2.46	1000	2.69	1047	2.91	1094	3.12	1140	3.32
3800	714	1.50	767	1.73	819	1.96	870	2.20	920	2.43	969	2.67	1017	2.90	1064	3.12	1111	3.33	1157	3.53
4000	733	1.73	786	1.96	837	2.19	888	2.43	938	2.66	987	2.90	1035	3.12	1083	3.34	1129	3.56	1175	3.76
4200	753	1.98	806	2.21	857	2.44	908	2.68	958	2.91	1007	3.15	1055	3.37	1102	3.60	1149	3.81	1195	4.01
4400	774	2.25	827	2.48	879	2.72	930	2.95	979	3.19	1028	3.42	1076	3.65	1124	3.87	1170	4.08	1216	4.28
4600	797	2.55	850	2.78	902	3.02	952	3.25	1002	3.49	1051	3.72	1099	3.95	1147	4.17	1193	4.38	1239	4.58
4800	822	2.88	874	3.11	926	3.34	977	3.58	1027	3.81	1076	4.05	1124	4.27	1171	4.50	1218	4.71	--	--
5000	848	3.23	901	3.46	952	3.69	1003	3.93	1053	4.16	1102	4.40	1150	4.62	1197	4.84	1242	5.06	--	--

Standard Static Option with Motor rated at 2.4-hp
Medium Static Option with Motor rated at 3.7-hp
High Static Option with Motor rated at 5.25-hp
- Exceeds recommended blower speed

1. Blower performance includes gas heat exchangers and 2” filters. See STATIC RESISTANCE table for additional applications.

Note: See RPM SELECTION table to determine desired motor sheave setting and to determine the maximum continuous BHP.
kW = 0.929 x BHP

ZQ04-06 Side Duct Application (Belt Drive)

ZQ04 (3.0 Ton) Side Duct

CFM	AVAILABLE EXTERNAL STATIC PRESSURE - IWG[1]																			
	0.2		0.4		0.6		0.8		1.0		1.2		1.4		1.6		1.8		2.0	
	RPM	BHP	RPM	BHP	RPM	BHP	RPM	BHP	RPM	BHP	RPM	BHP	RPM	BHP	RPM	BHP	RPM	BHP	RPM	BHP
900	n/a	n/a	877	0.25	965	0.34	1050	0.44	1133	0.54	1213	0.64	1292	0.74	1371	0.83	1450	0.92	1531	1.01
1000	795	0.21	887	0.29	976	0.38	1061	0.48	1143	0.58	1224	0.68	1303	0.78	1382	0.87	1461	0.96	1541	1.05
1100	806	0.25	899	0.34	988	0.43	1073	0.53	1155	0.63	1236	0.73	1315	0.83	1394	0.92	1473	1.01	1553	1.09
1200	820	0.31	913	0.39	1002	0.48	1087	0.58	1169	0.68	1249	0.78	1329	0.88	1407	0.97	1487	1.06	1567	1.15
1300	836	0.37	929	0.45	1018	0.54	1103	0.64	1185	0.74	1265	0.84	1345	0.94	1423	1.03	1503	1.12	1583	1.21
1400	855	0.43	948	0.52	1036	0.61	1121	0.70	1204	0.80	1284	0.90	1363	1.00	1442	1.10	1521	1.19	--	--
1500	876	0.50	969	0.58	1058	0.68	1143	0.77	1225	0.87	1305	0.97	1385	1.07	1464	1.17	1543	1.26	--	--

	Medium Static Option with Motor rated at 2.4-hp
	High Static Option with Motor rated at 2.4-hp
--	Exceeds recommended Blower speed

1. Blower performance includes gas heat exchangers and 2” filters. See STATIC RESISTANCE table for additional applications.

Note: See RPM SELECTION table to determine desired motor sheave setting and to determine the maximum continuous BHP.
kW = 0.929 x BHP

ZQ05 (4.0 Ton) Side Duct

CFM	AVAILABLE EXTERNAL STATIC PRESSURE - IWG[1]																			
	0.2		0.4		0.6		0.8		1.0		1.2		1.4		1.6		1.8		2.0	
	RPM	BHP	RPM	BHP	RPM	BHP	RPM	BHP	RPM	BHP	RPM	BHP	RPM	BHP	RPM	BHP	RPM	BHP	RPM	BHP
1200	893	0.37	976	0.46	1054	0.56	1128	0.66	1199	0.75	1268	0.85	1336	0.94	1404	1.03	1474	1.12	1545	1.20
1300	910	0.43	993	0.52	1071	0.62	1144	0.72	1216	0.81	1285	0.91	1353	1.00	1421	1.09	1491	1.18	1562	1.26
1400	931	0.49	1014	0.59	1092	0.69	1166	0.78	1237	0.88	1306	0.97	1374	1.06	1442	1.15	1512	1.24	1583	1.33
1500	956	0.56	1039	0.66	1117	0.76	1191	0.85	1262	0.95	1331	1.04	1399	1.14	1467	1.23	1537	1.31	**1608**	**1.40**
1600	985	0.64	1067	0.74	1145	0.83	1219	0.93	1290	1.03	1359	1.12	1428	1.21	1496	1.30	1565	1.39	**1637**	**1.47**
1700	1016	0.73	1099	0.82	1177	0.92	1251	1.02	1322	1.11	1391	1.21	1459	1.30	1528	1.39	**1597**	**1.48**	--	--
1800	1051	0.82	1134	0.92	1212	1.02	1286	1.11	1357	1.21	1426	1.30	1494	1.40	1562	1.49	**1632**	**1.57**	--	--
1900	1088	0.93	1171	1.02	1249	1.12	1323	1.22	1394	1.31	1463	1.41	1532	1.50	**1600**	**1.59**	--	--	--	--
2000	1128	1.04	1211	1.14	1289	1.23	1363	1.33	1434	1.43	1503	1.52	1571	1.61	**1640**	**1.70**	--	--	--	--

	Medium Static Option with Motor rated at 2.4-hp
	High Static Option with Motor rated at 2.4-hp
Bold	Field supplied AK41 x 3/4" fixed blower pulley with Motor rated at 2.4-hp
--	Exceeds recommended blower speed

1. Blower performance includes gas heat exchangers and 2” filters. See STATIC RESISTANCE table for additional applications.

Note: See RPM SELECTION table to determine desired motor sheave setting and to determine the maximum continuous BHP.
kW = 0.929 x BHP

ZQ06 (5.0 Ton) Side Duct

CFM	AVAILABLE EXTERNAL STATIC PRESSURE - IWG[1]																			
	0.2		0.4		0.6		0.8		1.0		1.2		1.4		1.6		1.8		2.0	
	RPM	BHP	RPM	BHP	RPM	BHP	RPM	BHP	RPM	BHP	RPM	BHP	RPM	BHP	RPM	BHP	RPM	BHP	RPM	BHP
1500	806	0.35	885	0.47	961	0.60	1034	0.73	1104	0.86	1170	1.00	1233	1.13	1292	1.26	1346	1.39	1396	1.52
1600	825	0.44	904	0.56	980	0.68	1053	0.81	1123	0.95	1189	1.08	1252	1.22	1311	1.35	1365	1.48	1415	1.61
1700	846	0.52	925	0.64	1001	0.76	1074	0.89	1144	1.03	1210	1.16	1273	1.30	1332	1.43	1386	1.56	1436	1.69
1800	869	0.60	947	0.72	1023	0.84	1096	0.97	1166	1.11	1233	1.24	1295	1.38	1354	1.51	1409	1.64	1459	1.77
1900	892	0.68	971	0.80	1047	0.93	1120	1.06	1190	1.19	1256	1.32	1319	1.46	1378	1.59	1432	1.72	1482	1.85
2000	916	0.77	995	0.89	1071	1.01	1144	1.14	1214	1.28	1280	1.41	1343	1.55	1402	1.68	1456	1.81	1506	1.94
2100	941	0.86	1019	0.98	1095	1.11	1168	1.24	1238	1.37	1305	1.50	1367	1.64	1426	1.77	1481	1.90	1531	2.03
2200	966	0.96	1044	1.08	1120	1.21	1193	1.34	1263	1.47	1329	1.61	1392	1.74	1451	1.87	1505	2.01	1555	2.13
2300	990	1.07	1069	1.19	1145	1.32	1218	1.45	1287	1.58	1354	1.72	1417	1.85	1476	1.98	1530	2.11	1580	2.24
2400	1015	1.19	1093	1.31	1169	1.44	1242	1.57	1312	1.70	1379	1.83	1441	1.97	1500	2.10	1555	2.23	--	--
2500	1039	1.32	1118	1.44	1193	1.56	1266	1.69	1336	1.83	1403	1.96	1466	2.10	1524	2.23	1579	2.36	--	--

	Medium Static Option with Motor rated at 2.4-hp
	High Static Option with Motor rated at 2.9-hp
--	Exceeds recommended blower speed

1. Blower performance includes gas heat exchangers and 2” filters. See STATIC RESISTANCE table for additional applications.

Note: See RPM SELECTION table to determine desired motor sheave setting and to determine the maximum continuous BHP.
kW = 0.929 x BHP

ZQ04-06 Bottom Duct Application (Belt Drive)

ZQ04 (3.0 Ton) Bottom Duct

CFM	AVAILABLE EXTERNAL STATIC PRESSURE - IWG[1]																			
	0.2		0.4		0.6		0.8		1.0		1.2		1.4		1.6		1.8		2.0	
	RPM	BHP	RPM	BHP	RPM	BHP	RPM	BHP	RPM	BHP	RPM	BHP	RPM	BHP	RPM	BHP	RPM	BHP	RPM	BHP
900	792	0.14	879	0.25	968	0.37	1055	0.49	1141	0.61	1226	0.73	1308	0.84	1388	0.93	1466	1.01	1541	1.06
1000	804	0.18	893	0.29	981	0.41	1069	0.53	1155	0.66	1239	0.77	1322	0.88	1402	0.98	1480	1.05	1554	1.10
1100	819	0.23	909	0.34	997	0.46	1084	0.58	1171	0.71	1255	0.82	1337	0.93	1418	1.03	1495	1.10	1570	1.15
1200	837	0.29	926	0.40	1015	0.52	1102	0.64	1188	0.76	1273	0.88	1355	0.99	1435	1.08	1513	1.16	1588	1.21
1300	857	0.36	946	0.46	1035	0.58	1122	0.70	1208	0.83	1293	0.94	1375	1.05	1455	1.15	1533	1.22	--	--
1400	880	0.43	969	0.53	1058	0.65	1145	0.77	1231	0.90	1315	1.02	1398	1.12	1478	1.22	1556	1.29	--	--
1500	905	0.50	994	0.61	1082	0.73	1170	0.85	1256	0.97	1340	1.09	1423	1.20	1503	1.30	1581	1.37	--	--

Medium Static Option with Motor rated at 2.4-hp
High Static Option with Motor rated at 2.4-hp
-- Exceeds recommended Blower speed

1. Blower performance includes gas heat exchangers and 2” filters. See STATIC RESISTANCE table for additional applications.

Note: See RPM SELECTION table to determine desired motor sheave setting and to determine the maximum continuous BHP.
kW = 0.929 x BHP

ZQ05 (4.0 Ton) Bottom Duct

CFM	AVAILABLE EXTERNAL STATIC PRESSURE - IWG[1]																			
	0.2		0.4		0.6		0.8		1.0		1.2		1.4		1.6		1.8		2.0	
	RPM	BHP	RPM	BHP	RPM	BHP	RPM	BHP	RPM	BHP	RPM	BHP	RPM	BHP	RPM	BHP	RPM	BHP	RPM	BHP
1200	908	0.34	994	0.45	1072	0.55	1145	0.64	1214	0.74	1283	0.83	1352	0.92	1424	1.01	1502	1.11	1586	1.20
1300	921	0.40	1007	0.51	1085	0.61	1158	0.70	1227	0.80	1296	0.89	1365	0.98	1437	1.07	1514	1.17	**1599**	**1.26**
1400	938	0.47	1023	0.58	1101	0.68	1174	0.77	1244	0.86	1312	0.96	1382	1.05	1454	1.14	1531	1.23	**1616**	**1.33**
1500	959	0.55	1044	0.65	1122	0.75	1195	0.85	1265	0.94	1333	1.03	1403	1.12	1475	1.21	1552	1.31	**1637**	**1.41**
1600	985	0.63	1070	0.73	1148	0.83	1221	0.93	1290	1.02	1359	1.11	1428	1.20	1500	1.29	1578	1.39	--	--
1700	1015	0.71	1100	0.82	1179	0.92	1251	1.01	1321	1.11	1389	1.20	1459	1.29	1531	1.38	**1608**	**1.48**	--	--
1800	1050	0.81	1136	0.91	1214	1.01	1287	1.11	1356	1.20	1425	1.29	1494	1.39	1566	1.48	**1644**	**1.57**	--	--
1900	1091	0.91	1176	1.02	1254	1.12	1327	1.21	1397	1.31	1465	1.40	1534	1.49	**1607**	**1.58**	--	--	--	--
2000	1136	1.02	1222	1.13	1300	1.23	1372	1.32	1442	1.42	1510	1.51	1580	1.60	--	--	--	--	--	--

Medium Static Option with Motor rated at 2.4-hp
High Static Option with Motor rated at 2.4-hp
Bold Field supplied AK41 x 3/4" fixed blower pulley with Motor rated at 2.4-hp
-- Exceeds recommended blower speed

1. Blower performance includes gas heat exchangers and 2” filters. See STATIC RESISTANCE table for additional applications.

Note: See RPM SELECTION table to determine desired motor sheave setting and to determine the maximum continuous BHP.
kW = 0.929 x BHP

ZQ06 (5.0 Ton) Bottom Duct

CFM	AVAILABLE EXTERNAL STATIC PRESSURE - IWG[1]																			
	0.2		0.4		0.6		0.8		1.0		1.2		1.4		1.6		1.8		2.0	
	RPM	BHP	RPM	BHP	RPM	BHP	RPM	BHP	RPM	BHP	RPM	BHP	RPM	BHP	RPM	BHP	RPM	BHP	RPM	BHP
1500	846	0.34	914	0.48	983	0.62	1052	0.75	1120	0.89	1188	1.02	1254	1.16	1318	1.29	1378	1.43	1435	1.56
1600	868	0.41	936	0.55	1004	0.68	1073	0.82	1142	0.95	1210	1.09	1276	1.23	1339	1.36	1400	1.50	1457	1.63
1700	889	0.49	957	0.62	1026	0.76	1095	0.90	1164	1.03	1231	1.17	1297	1.30	1361	1.44	1422	1.57	1479	1.71
1800	911	0.57	979	0.71	1048	0.85	1117	0.98	1186	1.12	1253	1.25	1319	1.39	1383	1.53	1443	1.66	1501	1.79
1900	934	0.67	1002	0.81	1071	0.94	1140	1.08	1208	1.21	1276	1.35	1342	1.48	1405	1.62	1466	1.75	1523	1.89
2000	958	0.77	1026	0.91	1094	1.04	1164	1.18	1232	1.32	1300	1.45	1366	1.59	1429	1.72	1490	1.86	1547	1.99
2100	983	0.88	1051	1.02	1120	1.15	1189	1.29	1258	1.42	1325	1.56	1391	1.69	1455	1.83	1516	1.96	1573	2.10
2200	1010	0.99	1078	1.13	1147	1.26	1216	1.40	1285	1.54	1352	1.67	1418	1.81	1482	1.94	1543	2.08	--	--
2300	1039	1.11	1107	1.25	1176	1.38	1245	1.52	1314	1.65	1381	1.79	1447	1.93	1511	2.06	1572	2.20	--	--
2400	1070	1.23	1138	1.37	1207	1.50	1276	1.64	1345	1.78	1412	1.91	1478	2.05	1542	2.18	--	--	--	--
2500	1103	1.36	1171	1.49	1240	1.63	1309	1.77	1378	1.90	1445	2.04	1511	2.17	1575	2.31	--	--	--	--

Medium Static Option with Motor rated at 2.4-hp
High Static Option with Motor rated at 2.9-hp
-- Exceeds recommended blower speed

1. Blower performance includes gas heat exchangers and 2” filters. See STATIC RESISTANCE table for additional applications.

Note: See RPM SELECTION table to determine desired motor sheave setting and to determine the maximum continuous BHP.
kW = 0.929 x BHP

ZL08-14 Side Duct Application (Belt Drive)

ZL08 (7.5 Ton) Side Duct

CFM	AVAILABLE EXTERNAL STATIC PRESSURE - IWG[1]																			
	0.2		0.4		0.6		0.8		1.0		1.2		1.4		1.6		1.8		2.0	
	RPM	BHP	RPM	BHP	RPM	BHP	RPM	BHP	RPM	BHP	RPM	BHP	RPM	BHP	RPM	BHP	RPM	BHP	RPM	BHP
2250	547	0.39	610	0.60	670	0.81	727	1.01	783	1.21	836	1.41	888	1.59	939	1.78	989	1.96	1038	2.13
2400	556	0.47	619	0.69	679	0.90	736	1.10	792	1.30	845	1.49	897	1.68	948	1.86	998	2.04	1047	2.22
2600	568	0.60	631	0.81	691	1.02	749	1.22	804	1.42	857	1.61	909	1.80	960	1.99	1010	2.17	1059	2.34
2800	581	0.73	644	0.95	704	1.16	762	1.36	817	1.56	871	1.75	923	1.94	973	2.13	1023	2.31	1073	2.48
3000	595	0.89	658	1.10	718	1.31	776	1.51	831	1.71	885	1.91	937	2.09	988	2.28	1038	2.46	1087	2.63
3200	610	1.05	673	1.27	733	1.48	791	1.68	846	1.88	900	2.07	952	2.26	1003	2.44	1053	2.62	--	--
3400	627	1.23	689	1.45	750	1.66	807	1.86	863	2.06	916	2.25	968	2.44	1019	2.62	1069	2.80	--	--
3600	644	1.42	707	1.64	767	1.85	824	2.05	880	2.25	933	2.44	985	2.63	1036	2.82	1086	3.00	--	--
3750	657	1.58	720	1.79	780	2.00	838	2.20	893	2.40	947	2.60	999	2.78	1049	2.97	1099	3.15	--	--

Standard Static Option with Motor rated at 2.4-hp
Medium Static Option with Motor rated at 2.4-hp
High Static Option with Motor rated at 3.7-hp
-- Exceeds recommended blower speed

1. Blower performance includes gas heat exchangers and 2” filters. See STATIC RESISTANCE table for additional applications.

Note: See RPM SELECTION table to determine desired motor sheave setting and to determine the maximum continuous BHP.
kW = 0.929 x BHP

ZL09 (8.5 Ton) Side Duct

CFM	AVAILABLE EXTERNAL STATIC PRESSURE - IWG[1]																			
	0.2		0.4		0.6		0.8		1.0		1.2		1.4		1.6		1.8		2.0	
	RPM	BHP	RPM	BHP	RPM	BHP	RPM	BHP	RPM	BHP	RPM	BHP	RPM	BHP	RPM	BHP	RPM	BHP	RPM	BHP
2550	565	0.56	628	0.78	688	0.99	745	1.19	801	1.39	854	1.58	906	1.77	957	1.95	1007	2.13	1056	2.31
2600	568	0.60	631	0.81	691	1.02	749	1.22	804	1.42	857	1.61	909	1.80	960	1.99	1010	2.17	1059	2.34
2800	581	0.73	644	0.95	704	1.16	762	1.36	817	1.56	871	1.75	923	1.94	973	2.13	1023	2.31	1073	2.48
3000	595	0.89	658	1.10	718	1.31	776	1.51	831	1.71	885	1.91	937	2.09	988	2.28	1038	2.46	1087	2.63
3200	610	1.05	673	1.27	733	1.48	791	1.68	846	1.88	900	2.07	952	2.26	1003	2.44	1053	2.62	1100	2.80
3400	627	1.23	689	1.45	750	1.66	807	1.86	863	2.06	916	2.25	968	2.44	1019	2.62	1069	2.80	--	--
3600	644	1.42	707	1.64	767	1.85	824	2.05	880	2.25	933	2.44	985	2.63	1036	2.82	1086	3.00	--	--
3800	662	1.63	725	1.84	785	2.05	842	2.26	898	2.46	951	2.65	1003	2.84	1054	3.02	1100	3.20	--	--
4000	681	1.85	744	2.06	804	2.27	861	2.47	917	2.67	970	2.87	1022	3.05	1073	3.24	--	--	--	--
4200	701	2.08	764	2.29	**824**	**2.50**	881	2.70	937	2.90	990	3.09	1042	3.28	1093	3.47	--	--	--	--
4250	706	2.14	769	2.35	**829**	**2.56**	887	2.76	942	2.96	996	3.15	1048	3.34	1098	3.53	--	--	--	--

Standard Static Option with Motor rated at 2.4-hp
Medium Static Option with Motor rated at 2.4-hp
High Static Option with Motor rated at 3.7-hp
Bold Field-supplied AK79 x 1 fixed pulley (p/n 9381) with Motor rated at 3.7-hp
-- Exceeds recommended blower speed

1. Blower performance includes gas heat exchangers and 2” filters. See STATIC RESISTANCE table for additional applications.

Note: See RPM SELECTION table to determine desired motor sheave setting and to determine the maximum continuous BHP.
kW = 0.929 x BHP

ZL12 (10 Ton) Side Duct

CFM	AVAILABLE EXTERNAL STATIC PRESSURE - IWG[1]																			
	0.2		0.4		0.6		0.8		1.0		1.2		1.4		1.6		1.8		2.0	
	RPM	BHP	RPM	BHP	RPM	BHP	RPM	BHP	RPM	BHP	RPM	BHP	RPM	BHP	RPM	BHP	RPM	BHP	RPM	BHP
3000	653	0.79	706	1.02	758	1.25	808	1.49	858	1.72	907	1.95	955	2.18	1003	2.40	1049	2.62	1095	2.82
3200	667	0.94	720	1.17	771	1.40	822	1.64	872	1.88	921	2.11	969	2.34	1016	2.56	1063	2.77	1109	2.97
3400	682	1.11	734	1.34	786	1.57	837	1.81	887	2.04	936	2.28	984	2.50	1031	2.73	1078	2.94	1124	3.14
3600	697	1.29	750	1.52	802	1.76	853	1.99	903	2.23	952	2.46	1000	2.69	1047	2.91	1094	3.12	1140	3.32
3800	714	1.50	767	1.73	819	1.96	870	2.20	920	2.43	969	2.67	1017	2.90	1064	3.12	1111	3.33	1157	3.53
4000	733	1.73	786	1.96	837	2.19	888	2.43	938	2.66	987	2.90	1035	3.12	1083	3.34	1129	3.56	1174	3.76
4200	753	1.98	806	2.21	857	2.44	908	2.68	958	2.91	1007	3.15	1055	3.37	1102	3.60	1149	3.81	--	--
4400	774	2.25	827	2.48	879	2.72	930	2.95	979	3.19	1028	3.42	1076	3.65	1124	3.87	1170	4.08	--	--
4600	797	2.55	850	2.78	902	3.02	952	3.25	1002	3.49	1051	3.72	1099	3.95	1147	4.17	--	--	--	--
4800	822	2.88	874	3.11	926	3.34	977	3.58	1027	3.81	1076	4.05	1124	4.27	1171	4.50	--	--	--	--
5000	848	3.23	901	3.46	952	3.69	1003	3.93	1053	4.16	1102	4.40	1150	4.62	--	--	--	--	--	--

Standard Static Option with Motor rated at 2.4-hp
Medium Static Option with Motor rated at 3.7-hp
High Static Option with Motor rated at 5.25-hp
-- Exceeds recommended blower speed

1. Blower performance includes gas heat exchangers and 2” filters. See STATIC RESISTANCE table for additional applications.

Note: See RPM SELECTION table to determine desired motor sheave setting and to determine the maximum continuous BHP.
kW = 0.929 x BHP

ZL14 (12.5 Ton) Side Duct

CFM	AVAILABLE EXTERNAL STATIC PRESSURE - IWG[1]																			
	0.2		0.4		0.6		0.8		1.0		1.2		1.4		1.6		1.8		2.0	
	RPM	BHP	RPM	BHP	RPM	BHP	RPM	BHP	RPM	BHP	RPM	BHP	RPM	BHP	RPM	BHP	RPM	BHP	RPM	BHP
3750	684	1.33	741	1.56	792	1.81	840	2.07	884	2.33	927	2.60	971	2.85	1017	3.09	1066	3.30	1121	3.49
3800	688	1.38	745	1.61	797	1.85	844	2.12	888	2.38	932	2.65	976	2.90	1021	3.14	1071	3.35	1125	3.54
4000	706	1.58	763	1.81	814	2.06	861	2.32	906	2.59	949	2.85	993	3.11	1039	3.35	1088	3.56	1142	3.74
4200	724	1.81	781	2.04	832	2.29	879	2.55	924	2.82	967	3.08	1011	3.34	1057	3.57	1106	3.79	1160	3.97
4400	742	2.06	799	2.29	850	2.54	897	2.80	942	3.06	985	3.33	1029	3.58	1075	3.82	1124	4.03	1178	4.22
4600	760	2.32	817	2.55	869	2.80	916	3.06	960	3.33	1004	3.59	1048	3.85	1093	4.08	1143	4.30	--	--
4800	779	2.60	836	2.83	888	3.08	935	3.34	979	3.61	1023	3.88	1067	4.13	1112	4.37	1162	4.58	--	--
5000	799	2.91	856	3.14	907	3.39	954	3.65	999	3.91	1042	4.18	1086	4.43	1132	4.67	--	--	--	--
5200	819	3.23	876	3.46	927	3.71	974	3.97	1019	4.23	1062	4.50	1106	4.75	1152	4.99	--	--	--	--
5400	839	3.57	**896**	**3.80**	953	4.04	995	4.31	1039	4.57	1083	4.84	1127	5.09	--	--	--	--	--	--
5600	**860**	**3.92**	**917**	**4.15**	969	4.40	1016	4.66	1060	4.93	1104	5.19	--	--	--	--	--	--	--	--
5800	**882**	**4.30**	**939**	**4.53**	990	4.77	1037	5.04	--	--	--	--	--	--	--	--	--	--	--	--
6000	**904**	**4.69**	961	4.92	1012	5.17	--	--	--	--	--	--	--	--	--	--	--	--	--	--

Standard Static Option with Motor rated at 2.9-hp
Medium Static Option with Motor rated at 3.7-hp
High Static Option with Motor rated at 5.25-hp
Bold Field-supplied BK95 x 1 fixed pulley (p/n 1074787) with Motor rated at 5.25-hp
-- Exceeds recommended Blower speed

1. Blower performance includes gas heat exchangers and 2” filters. See STATIC RESISTANCE table for additional applications.

Note: See RPM SELECTION table to determine desired motor sheave setting and to determine the maximum continuous BHP.
kW = 0.857 x BHP for Standard Static option, kW = 0.829 x BHP for Medium and High Static options

ZL08-14 Bottom Duct Application (Belt Drive)

ZL08 (7.5 Ton) Bottom Duct

CFM	AVAILABLE EXTERNAL STATIC PRESSURE - IWG[1]																			
	0.2		0.4		0.6		0.8		1.0		1.2		1.4		1.6		1.8		2.0	
	RPM	BHP	RPM	BHP	RPM	BHP	RPM	BHP	RPM	BHP	RPM	BHP	RPM	BHP	RPM	BHP	RPM	BHP	RPM	BHP
2250	556	0.45	621	0.65	683	0.83	742	1.00	798	1.18	852	1.34	904	1.51	954	1.69	1003	1.87	1050	2.06
2400	567	0.53	632	0.73	694	0.91	753	1.09	809	1.26	863	1.43	914	1.60	964	1.77	1013	1.95	1060	2.14
2600	580	0.65	646	0.85	707	1.03	766	1.21	823	1.38	876	1.55	928	1.72	978	1.89	1027	2.07	1074	2.27
2800	595	0.79	660	0.99	722	1.17	780	1.35	837	1.52	890	1.69	942	1.86	992	2.03	1041	2.21	1088	2.40
3000	609	0.94	674	1.14	736	1.32	795	1.50	851	1.67	905	1.83	957	2.00	1007	2.18	1056	2.36	1100	2.55
3200	625	1.10	690	1.30	752	1.48	810	1.66	867	1.83	921	2.00	972	2.17	1022	2.34	1071	2.52	--	--
3400	641	1.28	706	1.47	768	1.66	827	1.83	883	2.00	937	2.17	989	2.34	1039	2.52	1087	2.70	'--	--
3600	658	1.47	723	1.66	785	1.85	844	2.02	900	2.19	954	2.36	1006	2.53	1056	2.70	1100	2.89	--	--
3750	672	1.61	737	1.81	799	1.99	858	2.17	914	2.34	968	2.51	1019	2.68	1069	2.85	--	--	--	--

Standard Static Option with Motor rated at 2.4-hp
Medium Static Option with Motor rated at 2.4-hp
High Static Option with Motor rated at 3.7-hp
-- Exceeds recommended blower speed

1. Blower performance includes gas heat exchangers and 2” filters. See STATIC RESISTANCE table for additional applications.

Note: See RPM SELECTION table to determine desired motor sheave setting and to determine the maximum continuous BHP.
kW = 0.929 x BHP

ZL09 (8.5 Ton) Bottom Duct

CFM	AVAILABLE EXTERNAL STATIC PRESSURE - IWG[1]																			
	0.2		0.4		0.6		0.8		1.0		1.2		1.4		1.6		1.8		2.0	
	RPM	BHP	RPM	BHP	RPM	BHP	RPM	BHP	RPM	BHP	RPM	BHP	RPM	BHP	RPM	BHP	RPM	BHP	RPM	BHP
2550	577	0.62	642	0.82	704	1.00	763	1.18	819	1.35	873	1.52	925	1.69	975	1.86	1023	2.04	1071	2.23
2600	580	0.65	646	0.85	707	1.03	766	1.21	823	1.38	876	1.55	928	1.72	978	1.89	1027	2.07	1074	2.27
2800	595	0.79	660	0.99	722	1.17	780	1.35	837	1.52	890	1.69	942	1.86	992	2.03	1041	2.21	1088	2.40
3000	609	0.94	674	1.14	736	1.32	795	1.50	851	1.67	905	1.83	957	2.00	1007	2.18	1056	2.36	1103	2.55
3200	625	1.10	690	1.30	752	1.48	810	1.66	867	1.83	921	2.00	972	2.17	1022	2.34	1071	2.52	--	--
3400	641	1.28	706	1.47	768	1.66	827	1.83	883	2.00	937	2.17	989	2.34	1039	2.52	1087	2.70	--	--
3600	658	1.47	723	1.66	785	1.85	844	2.02	900	2.19	954	2.36	1006	2.53	1056	2.70	1104	2.89	--	--
3800	676	1.67	742	1.86	803	2.04	862	2.22	918	2.39	972	2.56	1024	2.73	1074	2.90	--	--	--	--
4000	696	1.88	761	2.07	823	2.26	882	2.43	938	2.60	992	2.77	1043	2.94	1093	3.12	--	--	--	--
4200	716	2.10	781	2.29	**843**	**2.48**	902	2.65	958	2.82	1012	2.99	1064	3.16	1114	3.34	--	--	--	--
4250	721	2.16	786	2.35	848	2.53	907	2.71	963	2.88	1017	3.05	1069	3.22	1119	3.39	--	--	--	--

Standard Static Option with Motor rated at 2.4-hp
Medium Static Option with Motor rated at 2.4-hp
High Static Option with Motor rated at 3.7-hp
Bold Field-supplied AK79 x 1 fixed pulley (p/n 9381) with Motor rated at 3.7-hp
-- Exceeds recommended blower speed

1. Blower performance includes gas heat exchangers and 2” filters. See STATIC RESISTANCE table for additional applications.

Note: See RPM SELECTION table to determine desired motor sheave setting and to determine the maximum continuous BHP.
kW = 0.929 x BHP

ZL12 (10 Ton) Bottom Duct

CFM	AVAILABLE EXTERNAL STATIC PRESSURE - IWG[1]																			
	0.2		0.4		0.6		0.8		1.0		1.2		1.4		1.6		1.8		2.0	
	RPM	BHP	RPM	BHP	RPM	BHP	RPM	BHP	RPM	BHP	RPM	BHP	RPM	BHP	RPM	BHP	RPM	BHP	RPM	BHP
2600	626	0.50	679	0.73	731	0.97	782	1.20	831	1.44	880	1.67	928	1.90	976	2.12	1022	2.33	1068	2.53
2800	639	0.64	692	0.87	744	1.11	795	1.34	845	1.58	894	1.81	942	2.04	989	2.26	1036	2.47	1082	2.67
3000	653	0.79	706	1.02	758	1.25	808	1.49	858	1.72	907	1.95	955	2.18	1003	2.40	1049	2.62	1095	2.82
3200	667	0.94	720	1.17	771	1.40	822	1.64	872	1.88	921	2.11	969	2.34	1016	2.56	1063	2.77	1109	2.97
3400	682	1.11	734	1.34	786	1.57	837	1.81	887	2.04	936	2.28	984	2.50	1031	2.73	1078	2.94	1124	3.14
3600	697	1.29	750	1.52	802	1.76	853	1.99	903	2.23	952	2.46	1000	2.69	1047	2.91	1094	3.12	1140	3.32
3800	714	1.50	767	1.73	819	1.96	870	2.20	920	2.43	969	2.67	1017	2.90	1064	3.12	1111	3.33	1157	3.53
4000	733	1.73	786	1.96	837	2.19	888	2.43	938	2.66	987	2.90	1035	3.12	1083	3.34	1129	3.56	1175	3.76
4200	753	1.98	806	2.21	857	2.44	908	2.68	958	2.91	1007	3.15	1055	3.37	1102	3.60	1149	3.81	1195	4.01
4400	774	2.25	827	2.48	879	2.72	930	2.95	979	3.19	1028	3.42	1076	3.65	1124	3.87	1170	4.08	1216	4.28
4600	797	2.55	850	2.78	902	3.02	952	3.25	1002	3.49	1051	3.72	1099	3.95	1147	4.17	1193	4.38	1239	4.58
4800	822	2.88	874	3.11	926	3.34	977	3.58	1027	3.81	1076	4.05	1124	4.27	1171	4.50	1218	4.71	--	--
5000	848	3.23	901	3.46	952	3.69	1003	3.93	1053	4.16	1102	4.40	1150	4.62	1197	4.84	1242	5.06	--	--

Standard Static Option with Motor rated at 2.4-hp
Medium Static Option with Motor rated at 3.7-hp
High Static Option with Motor rated at 5.25-hp
- Exceeds recommended blower speed

1. Blower performance includes gas heat exchangers and 2” filters. See STATIC RESISTANCE table for additional applications.

Note: See RPM SELECTION table to determine desired motor sheave setting and to determine the maximum continuous BHP.
kW = 0.929 x BHP

ZL14 (12.5 Ton) Bottom Duct

CFM	AVAILABLE EXTERNAL STATIC PRESSURE - IWG[1]																			
	0.2		0.4		0.6		0.8		1.0		1.2		1.4		1.6		1.8		2.0	
	RPM	BHP	RPM	BHP	RPM	BHP	RPM	BHP	RPM	BHP	RPM	BHP	RPM	BHP	RPM	BHP	RPM	BHP	RPM	BHP
3750	715	1.46	762	1.68	810	1.91	858	2.13	907	2.36	957	2.58	1008	2.80	1060	3.02	1113	3.24	1167	3.46
3800	720	1.51	766	1.73	814	1.96	862	2.18	911	2.41	961	2.63	1012	2.85	1064	3.07	1117	3.29	1171	3.51
4000	737	1.72	784	1.94	832	2.17	880	2.39	929	2.62	979	2.84	1030	3.07	1082	3.29	1135	3.51	--	--
4200	756	1.95	803	2.17	851	2.40	899	2.63	948	2.85	998	3.07	1049	3.30	1101	3.52	1154	3.74	--	--
4400	777	2.20	824	2.42	871	2.65	920	2.87	969	3.10	1019	3.32	1069	3.55	1121	3.77	1174	3.98	--	--
4600	799	2.47	846	2.69	893	2.92	941	3.14	990	3.37	1040	3.59	1091	3.81	1143	4.04	--	--	--	--
4800	822	2.75	869	2.98	916	3.20	965	3.43	1014	3.65	1064	3.88	1114	4.10	1166	4.32	--	--	--	--
5000	846	3.06	893	3.28	941	3.51	989	3.73	1038	3.96	1088	4.18	1139	4.41	--	--	--	--	--	--
5200	872	3.39	919	3.61	966	3.83	1015	4.06	1064	4.28	1114	4.51	1164	4.73	--	--	--	--	--	--
5400	899	3.73	946	3.95	993	4.18	1042	4.40	1091	4.63	1141	4.85	--	--	--	--	--	--	--	--
5600	927	4.09	974	4.32	1021	4.54	1070	4.77	1119	4.99	1169	5.22	--	--	--	--	--	--	--	--
5800	956	4.47	1003	4.70	1051	4.92	1099	5.15	--	--	--	--	--	--	--	--	--	--	--	--
6000	987	4.87	1034	5.10	--	--	--	--	--	--	--	--	--	--	--	--	--	--	--	--

Standard Static Option with Motor rated at 2.4-hp
Medium Static Option with Motor rated at 3.7-hp
High Static Option with Motor rated at 5.25-hp

1. Blower performance includes gas heat exchangers and 2” filters. See STATIC RESISTANCE table for additional applications.

Note: See RPM SELECTION table to determine desired motor sheave setting and to determine the maximum continuous BHP.
kW = 0.857 x BHP for Standard Static option, kW = 0.829 x BHP for Medium and High Static options

ZY04-06 Side Duct Application (Direct Drive)

ZY04-06 Side Duct (Cooling)

Unit (Ton)	Motor Speed	Available External Static														
		0.2			0.4			0.6			0.8			1.0		
		CFM	WATTS	RPM	CFM	WATTS	RPM	CFM	WATTS	RPM	CFM	WATTS	RPM	CFM	WATTS	RPM
ZY04 (3)	1 (LOW)	987	120	651	813	145	774	698	162	864	541	180	959	383	201	1047
	2 (MED/LOW)	1079	144	677	936	171	795	793	190	886	692	214	975	521	232	1063
	3 (MED)	1153	166	701	1037	195	812	875	221	913	786	239	986	654	263	1076
	4 (MED/HI)	1191	178	712	1086	206	815	927	233	916	837	257	998	711	278	1083
	5 (HI)	1326	229	757	1235	261	856	1124	291	951	973	319	1035	896	336	1099
ZY05 (4)	1 (LOW)	1302	207	727	1188	240	841	1037	266	933	941	296	1022	882	318	1098
	2 (MED/LOW)	1421	247	757	1323	282	861	1209	315	958	1064	346	1043	993	368	1116
	3 (MED)	1538	297	795	1453	332	888	1343	367	982	1216	396	1058	1093	427	1146
	4 (MED/HI)	1571	315	809	1496	352	898	1385	389	996	1288	420	1072	1135	444	1147
	5 (HI)	1779	432	878	1707	470	960	1615	511	1042	1516	544	1123	1165	468	1160
ZY06 (5)	1 (LOW)	1588	298	695	1517	330	761	1409	358	835	1273	393	913	1167	418	973
	2 (MED/LOW)	1624	321	713	1557	352	777	1464	383	845	1315	418	924	1224	446	983
	3 (MED)	1942	504	792	1881	536	852	1800	565	908	1714	605	969	1611	644	1038
	4 (MED/HI)	2146	631	840	2064	692	908	2001	713	954	1932	757	1007	1843	794	1065
	5 (HI)	2316	812	892	2240	861	954	2181	894	1000	2113	938	1045	2003	946	1093

ZY04-06 Side Duct (Gas Heat)

Unit (Ton)	Motor Speed	Available External Static														
		0.2			0.4			0.6			0.8			1.0		
		CFM	WATTS	RPM	CFM	WATTS	RPM	CFM	WATTS	RPM	CFM	WATTS	RPM	CFM	WATTS	RPM
ZY04 (3)	1 (LOW)	978	125	684	853	149	797	734	172	906	596	190	998	445	203	1068
	2 (MED/LOW)	1078	153	721	962	175	817	846	200	922	726	226	1026	599	241	1098
	3 (MED)	1153	178	748	1045	199	837	934	226	937	831	251	1031	709	272	1114
	4 (MED/HI)	1315	248	819	1239	272	895	1138	300	980	1037	323	1062	922	343	1144
	5 (HI)	1728	484	959	1649	515	1027	1579	544	1089	1425	524	1138	1001	405	1168
ZY05 (4)	1 (LOW)	1299	223	786	1226	249	871	1137	273	956	1031	303	1051	923	329	1143
	2 (MED/LOW)	1413	272	832	1349	299	906	1266	325	982	1160	352	1070	1042	370	1155
	3 (MED)	1514	327	878	1456	353	942	1389	381	1014	1298	408	1089	1133	405	1165
	4 (MED/HI)	1751	472	972	1698	502	1033	1639	534	1088	1543	536	1142	1156	420	1172
	5 (HI)	2093	768	1116	1944	717	1137	1764	651	1152	1506	552	1163	1146	441	1177
ZY06 (5)	1 (LOW)	1528	328	781	1427	356	850	1346	386	912	1256	410	969	1181	434	1022
	2 (MED/LOW)	1575	362	803	1488	391	871	1401	419	929	1319	445	985	1247	469	1037
	3 (MED)	1867	572	902	1795	601	963	1709	628	1015	1633	652	1061	1544	671	1110
	4 (MED/HI)	2049	718	968	1969	768	1026	1902	788	1070	1808	802	1110	1637	744	1132
	5 (HI)	2218	899	1021	2138	928	1074	2007	907	1105	1846	842	1123	1671	767	1139

ZY04-06 Bottom Duct Application (Direct Drive)

ZY04-06 Bottom Duct (Cooling)

Unit (Ton)	Motor Speed	Available External Static														
		0.2			0.4			0.6			0.8			1.0		
		CFM	WATTS	RPM	CFM	WATTS	RPM	CFM	WATTS	RPM	CFM	WATTS	RPM	CFM	WATTS	RPM
ZY04 (3)	1 (LOW)	929	128	699	782	148	794	663	164	880	514	187	976	377	202	1053
	2 (MED/LOW)	1036	157	732	870	177	827	803	198	905	649	217	996	508	236	1074
	3 (MED)	1106	181	760	956	204	849	878	225	928	755	245	1010	616	266	1092
	4 (MED/HI)	1147	197	776	1042	218	860	916	243	944	820	262	1017	671	286	1103
	5 (HI)	1272	252	830	1177	277	909	1037	304	986	975	323	1053	872	347	1125
ZY05 (4)	1 (LOW)	1256	220	776	1170	242	851	1077	266	931	988	298	1025	872	321	1113
	2 (MED/LOW)	1350	272	828	1279	292	893	1196	320	966	1105	347	1048	1003	372	1131
	3 (MED)	1449	323	866	1380	350	937	1303	370	996	1223	402	1071	1133	428	1149
	4 (MED/HI)	1488	345	882	1418	374	954	1357	394	1006	1264	424	1083	1160	442	1155
	5 (HI)	1677	471	966	1602	507	1034	1543	525	1083	1475	545	1131	1209	465	1162
ZY06 (5)	1 (LOW)	1548	310	720	1441	336	792	1337	370	864	1213	397	928	1097	421	988
	2 (MED/LOW)	1593	337	738	1488	363	805	1381	394	875	1271	425	937	1150	451	997
	3 (MED)	1880	532	827	1792	563	890	1719	588	944	1632	629	1006	1527	652	1061
	4 (MED/HI)	2066	689	895	1999	712	942	1907	761	999	1830	773	1048	1734	809	1100
	5 (HI)	2237	862	949	2163	882	996	2097	929	1036	1998	946	1085	1815	883	1115

ZY04-06 Bottom Duct (Gas Heat)

Unit (Ton)	Motor Speed	Available External Static														
		0.2			0.4			0.6			0.8			1.0		
		CFM	WATTS	RPM	CFM	WATTS	RPM	CFM	WATTS	RPM	CFM	WATTS	RPM	CFM	WATTS	RPM
ZY04 (3)	1 (LOW)	969	130	703	839	151	810	717	174	916	569	191	1006	444	204	1069
	2 (MED/LOW)	1063	158	741	955	180	834	828	204	938	709	227	1030	583	242	1100
	3 (MED)	1135	182	769	1041	208	858	919	229	952	805	254	1045	681	275	1127
	4 (MED/HI)	1310	256	842	1225	279	917	1123	307	1001	1029	334	1083	863	335	1155
	5 (HI)	1680	501	997	1622	526	1056	1538	546	1119	1296	485	1153	939	374	1176
ZY05 (4)	1 (LOW)	1277	228	801	1196	251	878	1096	278	967	983	305	1062	873	329	1156
	2 (MED/LOW)	1382	278	847	1307	302	916	1217	327	994	1108	355	1083	949	359	1164
	3 (MED)	1486	331	888	1417	359	957	1331	385	1028	1237	410	1103	1023	385	1169
	4 (MED/HI)	1717	473	991	1653	509	1052	1586	538	1107	1443	521	1150	1052	394	1175
	5 (HI)	2006	738	1132	1854	682	1147	1704	621	1154	1504	552	1168	1073	418	1177
ZY06 (5)	1 (LOW)	1488	335	787	1400	363	851	1320	389	910	1242	416	969	1160	440	1027
	2 (MED/LOW)	1536	364	803	1453	392	864	1363	419	924	1293	447	981	1212	471	1037
	3 (MED)	1822	586	914	1752	602	966	1666	632	1017	1586	656	1066	1503	676	1113
	4 (MED/HI)	1999	726	982	1932	761	1030	1860	809	1076	1753	799	1114	1598	749	1134
	5 (HI)	2170	932	1040	2091	930	1084	1965	910	1109	1798	843	1127	1618	763	1139

ZQ04-06 Side Duct Application (Direct Drive)

ZQ04-06 Side Duct (Cooling)

Unit (Ton)	Motor Speed	Available External Static														
		0.2			0.4			0.6			0.8			1.0		
		CFM	WATTS	RPM	CFM	WATTS	RPM	CFM	WATTS	RPM	CFM	WATTS	RPM	CFM	WATTS	RPM
ZQ04 (3)	1 (LOW)	1147	152	659	988	181	787	901	203	891	800	226	987	682	247	1071
	2 (MED/LOW)	1214	175	683	1094	206	810	965	232	896	898	258	1003	794	276	1084
	3 (MED)	1402	234	735	1324	264	835	1161	302	947	1074	329	1034	986	351	1114
	4 (MED/HI)	1570	310	791	1512	348	884	1429	381	977	1253	420	1079	1130	423	1148
	5 (HI)	1825	448	866	1769	487	946	1705	521	1023	1610	559	1107	1229	472	1159
ZQ05 (4)	1 (LOW)	1412	261	793	1322	290	884	1244	321	966	1109	347	1059	1035	369	1131
	2 (MED/LOW)	1521	313	831	1461	349	920	1382	374	989	1283	400	1072	1166	426	1150
	3 (MED)	1636	376	874	1574	413	959	1487	441	1034	1413	465	1099	1184	446	1164
	4 (MED/HI)	1813	484	937	1747	522	1013	1668	552	1088	1581	565	1141	1212	458	1170
	5 (HI)	2351	920	1111	2129	819	1138	1912	718	1153	1678	622	1164	1378	513	1176
ZQ06 (5)	1 (LOW)	1692	345	727	1583	374	797	1482	403	866	1380	437	939	1262	462	1000
	2 (MED/LOW)	1849	438	779	1755	468	843	1667	495	902	1552	530	971	1439	558	1033
	3 (MED)	1989	532	818	1904	564	877	1828	598	935	1738	628	994	1633	664	1058
	4 (MED/HI)	2159	673	876	2087	713	931	2010	729	985	1933	778	1035	1859	812	1091
	5 (HI)	2349	852	928	2270	887	978	2195	922	1028	2118	947	1075	1973	914	1109

ZQ04-06 Side Duct (Gas Heat)

Unit (Ton)	Motor Speed	Available External Static														
		0.2			0.4			0.6			0.8			1.0		
		CFM	WATTS	RPM	CFM	WATTS	RPM	CFM	WATTS	RPM	CFM	WATTS	RPM	CFM	WATTS	RPM
ZQ04 (3)	1 (LOW)	1094	165	715	956	187	828	851	213	932	752	237	1026	638	253	1100
	2 (MED/LOW)	1180	189	735	1064	216	842	940	242	945	849	263	1029	748	286	1116
	3 (MED)	1353	251	790	1271	280	883	1138	310	979	1036	338	1068	958	362	1144
	4 (MED/HI)	1517	340	863	1450	374	940	1364	398	1021	1232	434	1114	1022	393	1163
	5 (HI)	1763	490	953	1690	520	1020	1619	549	1086	1442	525	1140	1070	413	1168
ZQ05 (4)	1 (LOW)	1356	285	870	1280	308	939	1185	332	1019	1074	364	1113	850	343	1179
	2 (MED/LOW)	1459	349	920	1390	371	985	1306	393	1050	1195	421	1133	862	350	1182
	3 (MED)	1553	412	973	1475	442	1039	1415	462	1092	1289	469	1155	880	357	1182
	4 (MED/HI)	1718	530	1040	1645	562	1102	1534	555	1147	1377	510	1165	961	390	1183
	5 (HI)	1955	737	1146	1780	665	1156	1587	599	1168	1407	529	1175	902	366	1186
ZQ06 (5)	1 (LOW)	1570	372	791	1463	399	855	1358	425	918	1260	456	983	1161	481	1044
	2 (MED/LOW)	1740	468	845	1638	496	903	1543	529	965	1454	553	1015	1360	578	1070
	3 (MED)	1882	569	889	1786	601	947	1687	629	1002	1587	660	1053	1487	680	1105
	4 (MED/HI)	2052	732	955	1967	749	999	1883	778	1049	1788	808	1099	1621	778	1130
	5 (HI)	2227	905	1004	2138	937	1051	2038	947	1091	1869	887	1118	1662	811	1137

ZQ04-06 Bottom Duct Application (Direct Drive)

ZQ04-06 Bottom Duct (Cooling)

Unit (Ton)	Motor Speed	Available External Static														
		0.2			0.4			0.6			0.8			1.0		
		CFM	WATTS	RPM	CFM	WATTS	RPM	CFM	WATTS	RPM	CFM	WATTS	RPM	CFM	WATTS	RPM
ZQ04 (3)	1 (LOW)	1086	165	721	929	192	837	861	211	927	769	235	1023	636	253	1108
	2 (MED/LOW)	1171	192	745	1035	221	856	946	241	944	868	267	1037	771	290	1119
	3 (MED)	1328	257	806	1255	280	890	1106	316	993	1038	336	1068	944	354	1148
	4 (MED/HI)	1509	340	867	1449	376	953	1309	407	1046	1210	436	1121	1002	387	1162
	5 (HI)	1740	490	959	1683	522	1033	1618	555	1101	1315	500	1149	1037	404	1168
ZQ05 (4)	1 (LOW)	1330	284	863	1261	302	929	1172	329	1006	1053	353	1088	970	376	1162
	2 (MED/LOW)	1458	349	917	1385	372	981	1307	395	1047	1174	421	1129	1023	398	1170
	3 (MED)	1553	414	965	1477	440	1033	1427	461	1086	1334	480	1148	1017	400	1175
	4 (MED/HI)	1714	532	1041	1638	563	1107	1555	563	1143	1374	503	1161	1033	406	1176
	5 (HI)	1935	740	1150	1768	667	1160	1610	610	1167	1421	536	1175	1061	421	1183
ZQ06 (5)	1 (LOW)	1600	355	759	1518	390	831	1437	418	897	1324	445	961	1224	469	1020
	2 (MED/LOW)	1760	449	811	1676	486	879	1587	514	938	1497	547	999	1414	574	1057
	3 (MED)	1898	554	859	1809	587	921	1735	619	977	1641	647	1035	1549	675	1088
	4 (MED/HI)	2072	708	923	1991	741	977	1917	775	1029	1836	802	1079	1702	794	1122
	5 (HI)	2228	884	980	2151	919	1031	2072	944	1077	1945	914	1109	1731	822	1131

ZQ04-06 Bottom Duct (Gas Heat)

Unit (Ton)	Motor Speed	Available External Static														
		0.2			0.4			0.6			0.8			1.0		
		CFM	WATTS	RPM	CFM	WATTS	RPM	CFM	WATTS	RPM	CFM	WATTS	RPM	CFM	WATTS	RPM
ZQ04 (3)	1 (LOW)	1047	167	733	903	195	854	808	220	956	693	238	1042	567	254	1115
	2 (MED/LOW)	1122	197	769	995	225	876	899	252	979	804	276	1065	682	294	1143
	3 (MED)	1275	262	829	1197	291	916	1058	324	1025	963	350	1108	792	334	1165
	4 (MED/HI)	1461	353	895	1391	381	972	1279	415	1064	1123	432	1146	854	355	1169
	5 (HI)	1674	506	993	1620	538	1061	1533	555	1123	1179	463	1161	885	369	1176
ZQ05 (4)	1 (LOW)	1301	300	911	1211	324	986	1112	349	1062	1007	371	1144	738	318	1184
	2 (MED/LOW)	1408	366	970	1331	390	1041	1232	416	1117	1061	401	1169	693	306	1184
	3 (MED)	1496	436	1019	1425	459	1079	1331	482	1146	1083	415	1171	717	316	1184
	4 (MED/HI)	1641	553	1091	1566	566	1138	1392	520	1160	1104	429	1176	738	321	1185
	5 (HI)	1779	680	1160	1630	621	1167	1428	547	1174	1144	447	1184	761	332	1191
ZQ06 (5)	1 (LOW)	1572	373	802	1466	402	868	1378	434	935	1264	461	999	1183	484	1055
	2 (MED/LOW)	1718	475	859	1632	508	920	1531	535	980	1438	562	1036	1344	592	1094
	3 (MED)	1868	578	908	1777	606	961	1687	639	1019	1591	666	1074	1474	678	1122
	4 (MED/HI)	2019	740	976	1944	770	1023	1859	797	1070	1743	796	1114	1528	728	1139
	5 (HI)	2182	927	1035	2089	949	1080	1961	918	1109	1808	854	1128	1552	737	1144

Power Exhaust Blower Curves

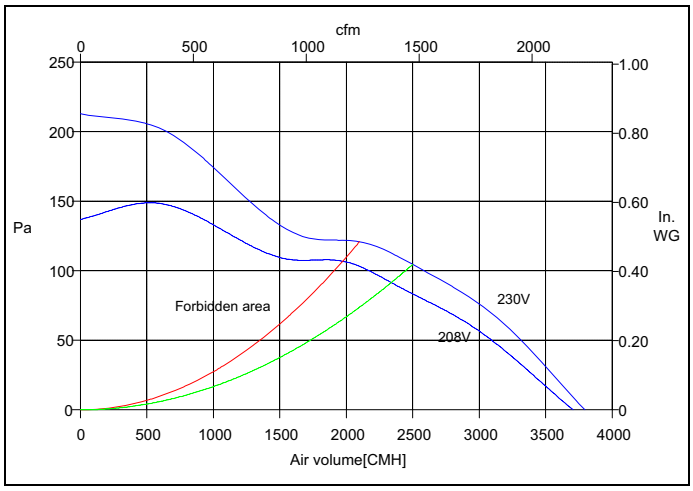

208/280-1-60 Power Exhaust Fan Curve

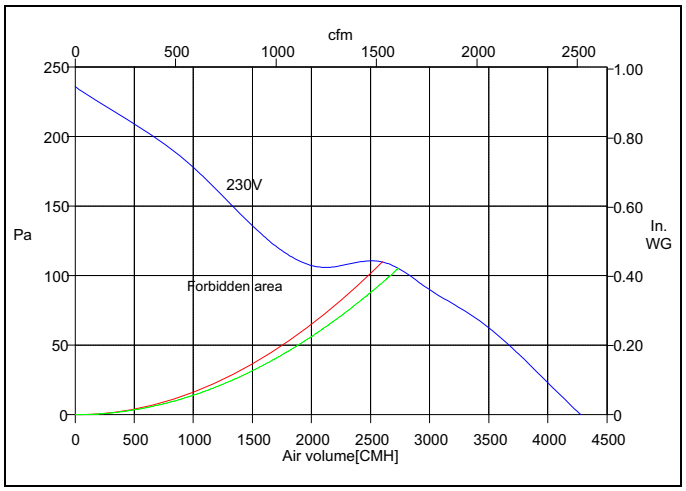

208/280-3-60 Power Exhaust Fan Curve

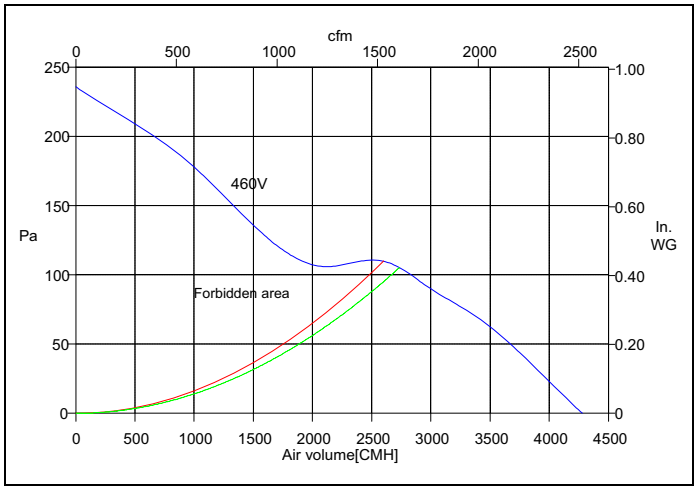

460-3-60 Power Exhaust Fan Curve

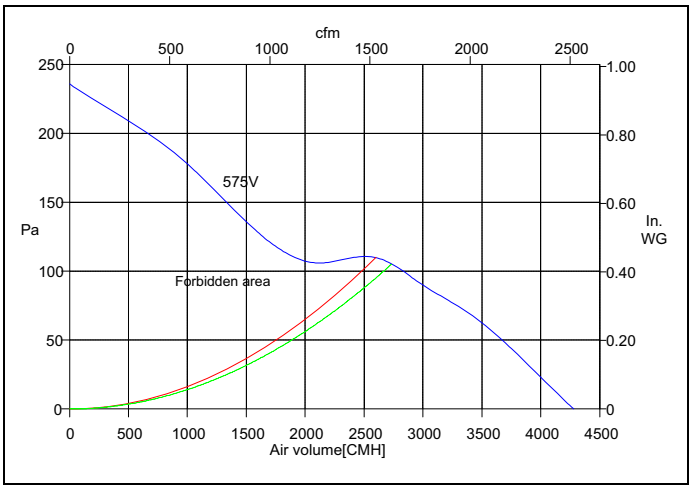

575-3-50 Power Exhaust Fan Curve

Electrical Data

ZXA7, 08-14 Standard Static Indoor Blower - Without Powered Convenience Outlet

Size (Tons)	Nominal Unit Voltage	Compressor 1			Compressor 2			OD Fan Motors (each)	Supply Blower Motor	Pwr Exh Motor	Pwr Conv Outlet	Electric Heat Field Installed Kit 2EK045*				MCA[1] (Amps)	Min Fuse[2]/ Breaker[3] Size (Amps)	Max Fuse[2]/ Breaker[3] Size (Amps)	Min Discon-nect Rating[4]		MCA[1] w/Pwr Exh (Amps)	Min Fuse[2]/ Breaker[3] Size w/ Pwr Exh (Amps)	Max Fuse[2]/ Breaker[3] Size w/ Pwr Exh (Amps)	Min Discon-nect Rating[4]/ Pwr Exh	
		RLA	LRA	MCC	RLA	LRA	MCC					Model	kW	Stages	Amps				FLA	LRA				FLA	LRA
Without VFD																									
A7 (6)	208-3-60	17.6	136	27				4.4	5.2	1.1		None	-	-	-	31.6	35	45	31	158	32.7	35	50	33	161
												10625	4.9	1	13.6	31.6	35	45	31	158	32.7	35	50	33	161
												11125	7.9	1	21.9	33.9	35	45	31	158	35.3	40	50	33	161
												11625	12	1	33.3	48.1	50	50	44	158	49.5	50	50	46	161
	230-3-60	17.6	136	27				4.4	5.2	1		None	-	-	-	31.6	35	45	31	161	32.6	35	50	32	163
												10625	6.5	1	15.6	31.6	35	45	31	161	32.6	35	50	32	163
												11125	10.5	1	25.3	38.1	40	45	35	161	39.4	40	50	36	163
												11625	16	1	38.5	54.6	60	60	50	161	55.9	60	60	51	163
	460-3-60	8.5	66.1	13				2.5	2.6	0.5		None	-	-	-	15.7	20	20	16	79	16.2	20	20	16	80
												10646	6	1	7.2	15.7	20	20	11	79	16.2	20	20	12	80
												11146	11.5	1	13.8	20.5	25	25	19	79	21.1	25	25	19	80
												11446	14	1	16.8	24.3	25	25	22	79	24.9	25	25	23	80
	575-3-60	6.3	55.3	10				4.4	2	0.4		None	-	-	-	14.3	15	20	15	65	14.7	15	20	15	66
With VFD																									
A7 (6)	208-3-60	17.6	136	27				4.4	7	1.1		None	-	-	-	33.4	35	50	33	196	34.5	35	50	35	199
												10625	4.9	1	13.6	33.4	35	50	33	196	34.5	35	50	35	199
												11125	7.9	1	21.9	36.1	40	50	33	196	37.5	40	50	35	199
												11625	12	1	33.3	50.4	60	60	46	196	51.8	60	60	48	199
	230-3-60	17.6	136	27				4.4	7.2	1		None	-	-	-	33.6	35	50	34	198	34.6	35	50	35	200
												10625	6.5	1	15.6	33.6	35	50	34	198	34.6	35	50	35	200
												11125	10.5	1	25.3	40.6	45	50	37	198	41.9	45	50	39	200
												11625	16	1	38.5	57.1	60	60	53	198	58.4	60	60	54	200
	460-3-60	8.5	66.1	13				2.5	3.6	0.5		None	-	-	-	16.7	20	25	17	97	17.2	20	25	17	98
												10646	6	1	7.2	16.7	20	25	12	97	17.2	20	25	13	98
												11146	11.5	1	13.8	21.8	25	25	20	97	22.4	25	25	21	98
												11446	14	1	16.8	25.5	30	30	23	97	26.1	30	30	24	98
	575-3-60	6.3	55.3	10				4.4	2.5	0.4		None	-	-	-	14.8	15	20	15	73	15.2	20	20	16	74
08 (7.5)	208-3-60	13.6	83.1	21	13.6	83.1	21	2.3	7	1.1		None	-	-	-	42.2	45	50	45	246	44.4	45	50	47	256
												11725	12	1	33.3	50.4	60	60	46	246	53.1	60	60	49	256
												12525	18.6	1	51.6	73.3	80	80	67	246	76	80	80	70	256
												13225	24	1	66.6	92	100	100	85	246	94.8	100	100	87	256
												14225	31.8	2	88.3	119.1	125	125	110	246	121.9	125	125	112	256
	230-3-60	13.6	83.1	21	13.6	83.1	21	2.3	7.2	1		None	-	-	-	42.4	45	50	45	248	44.4	45	50	47	243
												11725	16	1	38.5	57.1	60	60	53	248	59.6	60	60	55	243
												12525	24.8	1	59.7	83.6	90	90	77	248	86.1	90	90	79	243
												13225	32	1	77	105.3	110	110	97	248	107.8	110	110	99	243
												14225	42.4	2	102	136.5	150	150	126	248	139	150	150	128	243
	460-3-60	6.1	41	10	6.1	41	10	1.3	3.6	0.5		None	-	-	-	19.9	20	25	21	125	20.9	25	25	22	121
												11746	16.5	1	19.8	29.3	30	30	27	125	30.5	35	35	28	121
												12846	27.8	1	33.4	46.3	50	50	43	125	47.5	50	50	44	121
												13346	33	1	39.7	54.1	60	60	50	125	55.4	60	60	51	121
												14246	41.7	2	50.2	67.3	70	70	62	125	68.5	70	70	63	121
	575-3-60	4.2	33	7	4.2	33	7	1.1	2.5	0.4		None	-	-	-	14.2	15	15	15	93	15	15	15	16	90
												11758	17	1	16.4	23.6	25	25	22	93	24.6	25	25	23	90
												13458	34	1	32.7	44	45	45	40	93	45	45	45	41	90

ZXA7, 08-14 Standard Static Indoor Blower - Without Powered Convenience Outlet (Continued)

Size (Tons)	Nominal Unit Voltage	Compressor 1			Compressor 2			OD Fan Motors (each)	Supply Blower Motor	Pwr Exh Motor	Pwr Conv Outlet	Electric Heat Field Installed Kit 2EK045*				MCA[1] (Amps)	Min Fuse[2]/ Breaker[3] Size (Amps)	Max Fuse[2]/ Breaker[3] Size (Amps)	Min Discon-nect Rating[4]		MCA[1] w/Pwr Exh (Amps)	Min Fuse[2]/ Breaker[3] Size w/ Pwr Exh (Amps)	Max Fuse[2]/ Breaker[3] Size w/ Pwr Exh (Amps)	Min Discon-nect Rating[4]/ Pwr Exh	
		RLA	LRA	MCC	RLA	LRA	MCC					Model	kW	Stages	Amps				FLA	LRA				FLA	LRA
09 (8.5)	208-3-60	14.5	98	23	14.5	98	23	2.3	7	1.1		None	-	-	-	44.2	45	50	47	275	46.4	50	50	49	285
												11725	12	1	33.3	50.4	60	60	47	275	53.1	60	60	49	285
												12525	18.6	1	51.6	73.3	80	80	67	275	76	80	80	70	285
												13225	24	1	66.6	92	100	100	85	275	94.8	100	100	87	285
												14225	31.8	2	88.3	119.1	125	125	110	275	121.9	125	125	112	285
	230-3-60	14.5	98	23	14.5	98	23	2.3	7.2	1		None	-	-	-	44.4	45	50	47	278	46.4	50	60	49	272
												11725	16	1	38.5	57.1	60	60	53	278	59.6	60	60	55	272
												12525	24.8	1	59.7	83.6	90	90	77	278	86.1	90	90	79	272
												13225	32	1	77	105.3	110	110	97	278	107.8	110	110	99	272
												14225	42.4	2	102	136.5	150	150	126	278	139	150	150	128	272
	460-3-60	6.3	55	10	6.3	55	10	1.3	3.6	0.5		None	-	-	-	20.4	25	25	22	153	21.4	25	25	23	149
												11746	16.5	1	19.8	29.3	30	30	27	153	30.5	35	35	28	149
												12846	27.8	1	33.4	46.3	50	50	43	153	47.5	50	50	44	149
												13346	33	1	39.7	54.1	60	60	50	153	55.4	60	60	51	149
												14246	41.7	2	50.2	67.3	70	70	62	153	68.5	70	70	63	149
	575-3-60	6	41	9	6	41	9	1.1	2.5	0.4		None	-	-	-	18.2	20	20	19	109	19	20	20	20	106
												11758	17	1	16.4	23.6	25	25	22	109	24.6	25	25	23	106
												13458	34	1	32.7	44	45	45	40	109	45	45	45	41	106
12 (10)	208-3-60	16	110	25	15.6	110	24	2.3	7	1.1		None	-	-	-	47.2	50	60	50	299	49.4	50	60	52	309
												11725	12	1	33.3	50.4	60	60	50	299	53.1	60	60	52	309
												12525	18.6	1	51.6	73.3	80	80	67	299	76	80	80	70	309
												13225	24	1	66.6	92	100	100	85	299	94.8	100	100	87	309
												14225	31.8	2	88.3	119.1	125	125	110	299	121.9	125	125	112	309
	230-3-60	16	110	25	15.6	110	24	2.3	7.2	1		None	-	-	-	47.4	50	60	50	302	49.4	50	60	52	296
												11725	16	1	38.5	57.1	60	60	53	302	59.6	60	60	55	296
												12525	24.8	1	59.7	83.6	90	90	77	302	86.1	90	90	79	296
												13225	32	1	77	105.3	110	110	97	302	107.8	110	110	99	296
												14225	42.4	2	102	136.5	150	150	126	302	139	150	150	128	296
	460-3-60	7.8	52	12	7.8	52	12	1.3	3.6	0.5		None	-	-	-	23.8	25	30	25	147	24.8	25	30	26	143
												11746	16.5	1	19.8	29.3	30	30	27	147	30.5	35	35	28	143
												12846	27.8	1	33.4	46.3	50	50	43	147	47.5	50	50	44	143
												13346	33	1	39.7	54.1	60	60	50	147	55.4	60	60	51	143
												14246	41.7	2	50.2	67.3	70	70	62	147	68.5	70	70	63	143
	575-3-60	5.7	38.9	9	5.8	38.9	9	1.1	2.5	0.4		None	-	-	-	17.7	20	20	19	105	18.5	20	20	20	102
												11758	17	1	16.4	23.6	25	25	22	105	24.6	25	25	23	102
												13458	34	1	32.7	44	45	45	40	105	45	45	45	41	102
14 (12.5)	208-3-60	19.6	136	31	19.6	136	31	5.8	8.9	1.1		None	-	-	-	58.8	60	70	62	371	61	70	70	65	381
												11725	12	1	33.3	58.8	60	70	62	371	61	70	70	65	381
												12525	18.6	1	51.6	75.6	80	80	70	371	78.4	80	80	72	381
												13225	24	1	66.6	94.4	100	100	87	371	97.1	100	100	89	381
												14225	31.8	2	88.3	121.5	125	125	112	371	124.3	125	125	114	381
	230-3-60	19.6	136	31	19.6	136	31	5.2	8.2	1		None	-	-	-	57.5	60	70	60	370	59.5	60	70	63	375
												11725	16	1	38.5	58.4	60	70	60	370	60.9	70	70	63	375
												12525	24.8	1	59.7	84.9	90	90	78	370	87.4	90	90	80	375
												13225	32	1	77	106.5	110	110	98	370	109	110	110	100	375
												14225	42.4	2	102	137.8	150	150	127	370	140.3	150	150	129	375
	460-3-60	8.2	66.1	13	8.2	66.1	13	2.9	4.1	0.5		None	-	-	-	25.5	30	30	27	178	26.5	30	30	28	180
												11746	16.5	1	19.8	29.9	30	30	27	178	31.1	35	35	29	180
												12846	27.8	1	33.4	46.9	50	50	43	178	48.1	50	50	44	180
												13346	33	1	39.7	54.8	60	60	50	178	56	60	60	52	180
												14246	41.7	2	50.2	67.9	70	70	62	178	69.1	70	70	64	180
	575-3-60	6.6	55.3	10	6.6	55.3	10	2.2	3.2	0.4		None	-	-	-	20.3	25	25	21	148	21.1	25	25	22	150
												11758	17	1	16.4	24.5	25	25	23	148	25.5	30	30	23	150
												13458	34	1	32.7	44.9	45	45	41	148	45.9	50	50	42	150

1. Minimum Circuit Ampacity.
2. Dual Element, Time Delay Type.
3. HACR type per NEC.
4. Non-fused Disconnect, Verify on the unit nameplate that the disconnect is properly sized for the application. Units with field installed electric heat kits may exceed the factory installed disconnect amperage rating.

ZXA7, 08-14 Standard Static Indoor Blower - With Powered Convenience Outlet

Size (Tons)	Nominal Unit Voltage	Compressor 1			Compressor 2			OD Fan Motors (each)	Supply Blower Motor	Pwr Exh Motor	Pwr Conv Outlet	Electric Heat Field Installed Kit 2EK045*				MCA[1] (Amps)	Min Fuse[2]/ Breaker[3] Size (Amps)	Max Fuse[2]/ Breaker[3] Size (Amps)	Min Discon-nect Rating[4]		MCA[1] w/Pwr Exh (Amps)	Min Fuse[2]/ Breaker[3] Size w/ Pwr Exh (Amps)	Max Fuse[2]/ Breaker[3] Size w/ Pwr Exh (Amps)	Min Discon-nect Rating[4]/ Pwr Exh	
		RLA	LRA	MCC	RLA	LRA	MCC					Model	kW	Stages	Amps				FLA	LRA				FLA	LRA
Without VFD																									
A7 (6)	208-3-60	17.6	136	27				4.4	5.2	1.1	8.6	None	-	-	-	35.9	40	50	36	163	37	40	50	37	165
												10625	4.9	1	13.6	35.9	40	50	36	163	37	40	50	37	165
												11125	7.9	1	21.9	39.3	40	50	36	163	40.6	45	50	37	165
												11625	12	1	33.3	53.5	60	60	49	163	54.9	60	60	50	165
	230-3-60	17.6	136	27				4.4	5.2	1	8.6	None	-	-	-	35.9	40	50	36	165	36.9	40	50	37	168
												10625	6.5	1	15.6	35.9	40	50	36	165	36.9	40	50	37	168
												11125	10.5	1	25.3	43.5	45	50	40	165	44.8	45	50	41	168
												11625	16	1	38.5	60	60	60	55	165	61.3	70	70	56	168
	460-3-60	8.5	66.1	13				2.5	2.6	0.5	8.6	None	-	-	-	17.9	20	25	18	81	18.4	20	25	19	82
												10646	6	1	7.2	17.9	20	25	14	81	18.4	20	25	14	82
												11146	11.5	1	13.8	23.2	25	25	21	81	23.8	25	25	22	82
												11446	14	1	16.8	26.9	30	30	25	81	27.6	30	30	25	82
	575-3-60	6.3	55.3	10				4.4	2	0.4	8.6	None	-	-	-	16	20	20	17	67	16.4	20	20	17	68
With VFD																									
A7 (6)	208-3-60	17.6	136	27				4.4	7	1.1	8.6	None	-	-	-	37.7	40	50	38	200	38.8	40	50	40	203
												10625	4.9	1	13.6	37.7	40	50	38	200	38.8	40	50	40	203
												11125	7.9	1	21.9	41.5	45	50	38	200	42.9	45	50	40	203
												11625	12	1	33.3	55.8	60	60	51	200	57.1	60	60	53	203
	230-3-60	17.6	136	27				4.4	7.2	1	8.6	None	-	-	-	37.9	40	50	39	202	38.9	40	50	40	204
												10625	6.5	1	15.6	37.9	40	50	39	202	38.9	40	50	40	204
												11125	10.5	1	25.3	46	50	50	42	202	47.3	50	50	43	204
												11625	16	1	38.5	62.5	70	70	58	202	63.8	70	70	59	204
	460-3-60	8.5	66.1	13				2.5	3.6	0.5	8.6	None	-	-	-	18.9	20	25	19	99	19.4	20	25	20	100
												10646	6	1	7.2	18.9	20	25	15	99	19.4	20	25	15	100
												11146	11.5	1	13.8	24.4	25	25	22	99	25.1	30	30	23	100
												11446	14	1	16.8	28.2	30	30	26	99	28.8	30	30	27	100
	575-3-60	6.3	55.3	10				4.4	2.5	0.4	8.6	None	-	-	-	16.5	20	20	17	75	16.9	20	20	18	76
08 (7.5)	208-3-60	13.6	83.1	21	13.6	83.1	21	2.3	7	1.1	8.6	None	-	-	-	46.5	50	60	50	250	48.7	50	60	52	260
												11725	12	1	33.3	55.8	60	60	51	250	58.5	60	60	54	260
												12525	18.6	1	51.6	78.6	80	80	72	250	81.4	90	90	75	260
												13225	24	1	66.6	97.4	100	100	90	250	100.1	110	110	92	260
												14225	31.8	2	88.3	124.5	125	125	115	250	127.3	150	150	117	260
	230-3-60	13.6	83.1	21	13.6	83.1	21	2.3	7.2	1	8.6	None	-	-	-	46.7	50	60	50	252	48.7	50	60	52	247
												11725	16	1	38.5	62.5	70	70	58	252	65	70	70	60	247
												12525	24.8	1	59.7	89	90	90	82	252	91.5	100	100	84	247
												13225	32	1	77	110.6	125	125	102	252	113.1	125	125	104	247
												14225	42.4	2	102	141.9	150	150	131	252	144.4	150	150	133	247
	460-3-60	6.1	41	10	6.1	41	10	1.3	3.6	0.5	8.6	None	-	-	-	22.1	25	25	24	127	23.1	25	25	25	123
												11746	16.5	1	19.8	31.9	35	35	29	127	33.2	35	35	31	123
												12846	27.8	1	33.4	48.9	50	50	45	127	50.2	60	60	46	123
												13346	33	1	39.7	56.8	60	60	52	127	58.1	60	60	53	123
												14246	41.7	2	50.2	69.9	70	70	64	127	71.2	80	80	65	123
	575-3-60	4.2	33	7	4.2	33	7	1.1	2.5	0.4	8.6	None	-	-	-	15.9	20	20	17	95	16.7	20	20	18	92
												11758	17	1	16.4	25.8	30	30	24	95	26.8	30	30	25	92
												13458	34	1	32.7	46.2	50	50	42	95	47.2	50	50	43	92

ZXA7, 08-14 Standard Static Indoor Blower - With Powered Convenience Outlet (Continued)

Size (Tons)	Nominal Unit Voltage	Compressor 1			Compressor 2			OD Fan Motors (each)	Supply Blower Motor	Pwr Exh Motor	Pwr Conv Outlet	Electric Heat Field Installed Kit 2EK045*				MCA[1] (Amps)	Min Fuse[2]/ Breaker[3] Size (Amps)	Max Fuse[2]/ Breaker[3] Size (Amps)	Min Discon-nect Rating[4]		MCA[1] w/Pwr Exh (Amps)	Min Fuse[2]/ Breaker[3] Size w/ Pwr Exh (Amps)	Max Fuse[2]/ Breaker[3] Size w/ Pwr Exh (Amps)	Min Discon-nect Rating[4]/ Pwr Exh	
		RLA	LRA	MCC	RLA	LRA	MCC					Model	kW	Stages	Amps				FLA	LRA				FLA	LRA
09 (8.5)	208-3-60	14.5	98	23	14.5	98	23	2.3	7	1.1	8.6	None	-	-	-	48.5	50	60	52	280	50.7	60	60	54	290
												11725	12	1	33.3	55.8	60	60	52	280	58.5	60	60	54	290
												12525	18.6	1	51.6	78.6	80	80	72	280	81.4	90	90	75	290
												13225	24	1	66.6	97.4	100	100	90	280	100.1	110	110	92	290
												14225	31.8	2	88.3	124.5	125	125	115	280	127.3	150	150	117	290
	230-3-60	14.5	98	23	14.5	98	23	2.3	7.2	1	8.6	None	-	-	-	48.7	50	60	52	282	50.7	60	60	54	277
												11725	16	1	38.5	62.5	70	70	58	282	65	70	70	60	277
												12525	24.8	1	59.7	89	90	90	82	282	91.5	100	100	84	277
												13225	32	1	77	110.6	125	125	102	282	113.1	125	125	104	277
												14225	42.4	2	102	141.9	150	150	131	282	144.4	150	150	133	277
	460-3-60	6.3	55	10	6.3	55	10	1.3	3.6	0.5	8.6	None	-	-	-	22.6	25	25	24	155	23.6	25	25	25	151
												11746	16.5	1	19.8	31.9	35	35	29	155	33.2	35	35	31	151
												12846	27.8	1	33.4	48.9	50	50	45	155	50.2	60	60	46	151
												13346	33	1	39.7	56.8	60	60	52	155	58.1	60	60	53	151
												14246	41.7	2	50.2	69.9	70	70	64	155	71.2	80	80	65	151
	575-3-60	6	41	9	6	41	9	1.1	2.5	0.4	8.6	None	-	-	-	19.9	20	25	21	111	20.7	25	25	22	108
												11758	17	1	16.4	25.8	30	30	24	111	26.8	30	30	25	108
												13458	34	1	32.7	46.2	50	50	42	111	47.2	50	50	43	108
12 (10)	208-3-60	16	110	25	15.6	110	24	2.3	7	1.1	8.6	None	-	-	-	51.5	60	60	55	304	53.7	60	60	57	314
												11725	12	1	33.3	55.8	60	60	55	304	58.5	60	60	57	314
												12525	18.6	1	51.6	78.6	80	80	72	304	81.4	90	90	75	314
												13225	24	1	66.6	97.4	100	100	90	304	100.1	110	110	92	314
												14225	31.8	2	88.3	124.5	125	125	115	304	127.3	150	150	117	314
	230-3-60	16	110	25	15.6	110	24	2.3	7.2	1	8.6	None	-	-	-	51.7	60	60	55	306	53.7	60	60	57	301
												11725	16	1	38.5	62.5	70	70	58	306	65	70	70	60	301
												12525	24.8	1	59.7	89	90	90	82	306	91.5	100	100	84	301
												13225	32	1	77	110.6	125	125	102	306	113.1	125	125	104	301
												14225	42.4	2	102	141.9	150	150	131	306	144.4	150	150	133	301
	460-3-60	7.8	52	12	7.8	52	12	1.3	3.6	0.5	8.6	None	-	-	-	26	30	30	28	149	27	30	30	29	145
												11746	16.5	1	19.8	31.9	35	35	29	149	33.2	35	35	31	145
												12846	27.8	1	33.4	48.9	50	50	45	149	50.2	60	60	46	145
												13346	33	1	39.7	56.8	60	60	52	149	58.1	60	60	53	145
												14246	41.7	2	50.2	69.9	70	70	64	149	71.2	80	80	65	145
	575-3-60	5.7	38.9	9	5.8	38.9	9	1.1	2.5	0.4	8.6	None	-	-	-	19.4	20	25	21	107	20.2	25	25	22	104
												11758	17	1	16.4	25.8	30	30	24	107	26.8	30	30	25	104
												13458	34	1	32.7	46.2	50	50	42	107	47.2	50	50	43	104
14 (12.5)	208-3-60	19.6	136	31	19.6	136	31	5.8	8.9	1.1	8.6	None	-	-	-	63.1	70	80	67	375	65.3	70	80	69	385
												11725	12	1	33.3	63.1	70	80	67	375	65.3	70	80	69	385
												12525	18.6	1	51.6	81	90	90	75	375	83.8	90	90	77	385
												13225	24	1	66.6	99.8	100	100	92	375	102.5	110	110	94	385
												14225	31.8	2	88.3	126.9	150	150	117	375	129.6	150	150	119	385
	230-3-60	19.6	136	31	19.6	136	31	5.2	8.2	1	8.6	None	-	-	-	61.8	70	80	65	374	63.8	70	80	68	379
												11725	16	1	38.5	63.8	70	80	65	374	66.3	70	80	68	379
												12525	24.8	1	59.7	90.3	100	100	83	374	92.8	100	100	85	379
												13225	32	1	77	111.9	125	125	103	374	114.4	125	125	105	379
												14225	42.4	2	102	143.1	150	150	132	374	145.6	150	150	134	379
	460-3-60	8.2	66.1	13	8.2	66.1	13	2.9	4.1	0.5	8.6	None	-	-	-	27.7	30	35	29	180	28.7	30	35	31	182
												11746	16.5	1	19.8	32.6	35	35	30	180	33.8	35	35	31	182
												12846	27.8	1	33.4	49.6	50	50	46	180	50.8	60	60	47	182
												13346	33	1	39.7	57.4	60	60	53	180	58.7	60	60	54	182
												14246	41.7	2	50.2	70.6	80	80	65	180	71.8	80	80	66	182
	575-3-60	6.6	55.3	10	6.6	55.3	10	2.2	3.2	0.4	8.6	None	-	-	-	22	25	25	23	150	22.8	25	25	24	152
												11758	17	1	16.4	26.7	30	30	25	150	27.7	30	30	25	152
												13458	34	1	32.7	47	50	50	43	150	48	50	50	44	152

1. Minimum Circuit Ampacity.
2. Dual Element, Time Delay Type.
3. HACR type per NEC.
4. Non-fused Disconnect, Verify on the unit nameplate that the disconnect is properly sized for the application. Units with field installed electric heat kits may exceed the factory installed disconnect amperage rating.

ZXA7, ZX08-14 Medium Static Indoor Blower - Without Powered Convenience Outlet

Size (Tons)	Nominal Unit Voltage	Compressor 1			Compressor 2			OD Fan Motors (each)	Supply Blower Motor	Pwr Exh Motor	Pwr Conv Outlet	Electric Heat Field Installed Kit 2EK045*				MCA[1] (Amps)	Min Fuse[2]/ Breaker[3] Size (Amps)	Max Fuse[2]/ Breaker[3] Size (Amps)	Min Discon-nect Rating[4]		MCA[1] w/Pwr Exh (Amps)	Min Fuse[2]/ Breaker[3] Size w/ Pwr Exh (Amps)	Max Fuse[2]/ Breaker[3] Size w/ Pwr Exh (Amps)	Min Discon-nect Rating[4]/ Pwr Exh	
		RLA	LRA	MCC	RLA	LRA	MCC					Model	kW	Stages	Amps				FLA	LRA				FLA	LRA
Without VFD																									
A7 (6)	208-3-60	17.6	136	27				4.4	7.5	1.1		None	-	-	-	33.9	35	50	34	185	35	35	50	35	187
												10625	4.9	1	13.6	33.9	35	50	34	185	35	35	50	35	187
												11125	7.9	1	21.9	36.8	40	50	34	185	38.1	40	50	35	187
												11625	12	1	33.3	51	60	60	47	185	52.4	60	60	48	187
	230-3-60	17.6	136	27				4.4	7.5	1		None	-	-	-	33.9	35	50	34	191	34.9	35	50	35	193
												10625	6.5	1	15.6	33.9	35	50	34	191	34.9	35	50	35	193
												11125	10.5	1	25.3	41	45	50	38	191	42.3	45	50	39	193
												11625	16	1	38.5	57.5	60	60	53	191	58.8	60	60	54	193
	460-3-60	8.5	66.1	13				2.5	3.4	0.5		None	-	-	-	16.5	20	25	17	94	17	20	25	17	95
												10646	6	1	7.2	16.5	20	25	12	94	17	20	25	13	95
												11146	11.5	1	13.8	21.5	25	25	20	94	22.1	25	25	20	95
												11446	14	1	16.8	25.3	30	30	23	94	25.9	30	30	24	95
	575-3-60	6.3	55.3	10				4.4	2.8	0.4		None	-	-	-	15.1	20	20	16	77	15.5	20	20	16	78
With VFD																									
A7 (6)	208-3-60	17.6	136	27				4.4	8.9	1.1		None	-	-	-	35.3	40	50	36	198	36.4	40	50	37	200
												10625	4.9	1	13.6	35.3	40	50	36	198	36.4	40	50	37	200
												11125	7.9	1	21.9	38.5	40	50	36	198	39.9	40	50	37	200
												11625	12	1	33.3	52.8	60	60	49	198	54.1	60	60	50	200
	230-3-60	17.6	136	27				4.4	8.2	1		None	-	-	-	34.6	35	50	35	205	35.6	40	50	36	207
												10625	6.5	1	15.6	34.6	35	50	35	205	35.6	40	50	36	207
												11125	10.5	1	25.3	41.9	45	50	39	205	43.1	45	50	40	207
												11625	16	1	38.5	58.4	60	60	54	205	59.6	60	60	55	207
	460-3-60	8.5	66.1	13				2.5	4.1	0.5		None	-	-	-	17.2	20	25	17	101	17.7	20	25	18	102
												10646	6	1	7.2	17.2	20	25	13	101	17.7	20	25	14	102
												11146	11.5	1	13.8	22.4	25	25	21	101	23	25	25	21	102
												11446	14	1	16.8	26.1	30	30	24	101	26.8	30	30	25	102
	575-3-60	6.3	55.3	10				4.4	3.2	0.4		None	-	-	-	15.5	20	20	16	81	15.9	20	20	16	82
08 (7.5)	208-3-60	13.6	83.1	21	13.6	83.1	21	2.3	8.9	1.1		None	-	-	-	44.1	45	50	47	262	46.3	50	50	49	272
												11725	12	1	33.3	52.8	60	60	49	262	55.5	60	60	51	272
												12525	18.6	1	51.6	75.6	80	80	70	262	78.4	80	80	72	272
												13225	24	1	66.6	94.4	100	100	87	262	97.1	100	100	89	272
												14225	31.8	2	88.3	121.5	125	125	112	262	124.3	125	125	114	272
	230-3-60	13.6	83.1	21	13.6	83.1	21	2.3	8.2	1		None	-	-	-	43.4	45	50	46	265	45.4	50	50	48	260
												11725	16	1	38.5	58.4	60	60	54	265	60.9	70	70	56	260
												12525	24.8	1	59.7	84.9	90	90	78	265	87.4	90	90	80	260
												13225	32	1	77	106.5	110	110	98	265	109	110	110	100	260
												14225	42.4	2	102	137.8	150	150	127	265	140.3	150	150	129	260
	460-3-60	6.1	41	10	6.1	41	10	1.3	4.1	0.5		None	-	-	-	20.4	25	25	22	128	21.4	25	25	23	125
												11746	16.5	1	19.8	29.9	30	30	27	128	31.1	35	35	29	125
												12846	27.8	1	33.4	46.9	50	50	43	128	48.1	50	50	44	125
												13346	33	1	39.7	54.8	60	60	50	128	56	60	60	52	125
												14246	41.7	2	50.2	67.9	70	70	62	128	69.1	70	70	64	125
	575-3-60	4.2	33	7	4.2	33	7	1.1	3.2	0.4		None	-	-	-	14.9	15	15	16	102	15.7	20	20	17	99
												11758	17	1	16.4	24.5	25	25	23	102	25.5	30	30	23	99
												13458	34	1	32.7	44.9	45	45	41	102	45.9	50	50	42	99

ZXA7, ZX08-14 Medium Static Indoor Blower - Without Powered Convenience Outlet (Continued)

Size (Tons)	Nominal Unit Voltage	Compressor 1			Compressor 2			OD Fan Motors (each)	Supply Blower Motor	Pwr Exh Motor	Pwr Conv Outlet	Electric Heat Field Installed Kit 2EK045*				MCA[1] (Amps)	Min Fuse[2]/ Breaker[3] Size (Amps)	Max Fuse[2]/ Breaker[3] Size (Amps)	Min Discon-nect Rating[4]		MCA[1] w/Pwr Exh (Amps)	Min Fuse[2]/ Breaker[3] Size w/ Pwr Exh (Amps)	Max Fuse[2]/ Breaker[3] Size w/ Pwr Exh (Amps)	Min Discon-nect Rating[4]/ Pwr Exh	
		RLA	LRA	MCC	RLA	LRA	MCC					Model	kW	Stages	Amps				FLA	LRA				FLA	LRA
09 (8.5)	208-3-60	14.5	98	23	14.5	98	23	2.3	7	1.1		None	-	-	-	44.2	45	50	47	275	46.4	50	50	49	285
												11725	12	1	33.3	50.4	60	60	47	275	53.1	60	60	49	285
												12525	18.6	1	51.6	73.3	80	80	67	275	76	80	80	70	285
												13225	24	1	66.6	92	100	100	85	275	94.8	100	100	87	285
												14225	31.8	2	88.3	119.1	125	125	110	275	121.9	125	125	112	285
	230-3-60	14.5	98	23	14.5	98	23	2.3	7.2	1		None	-	-	-	44.4	45	50	47	278	46.4	50	60	49	272
												11725	16	1	38.5	57.1	60	60	53	278	59.6	60	60	55	272
												12525	24.8	1	59.7	83.6	90	90	77	278	86.1	90	90	79	272
												13225	32	1	77	105.3	110	110	97	278	107.8	110	110	99	272
												14225	42.4	2	102	136.5	150	150	126	278	139	150	150	128	272
	460-3-60	6.3	55	10	6.3	55	10	1.3	3.6	0.5		None	-	-	-	20.4	25	25	22	153	21.4	25	25	23	149
												11746	16.5	1	19.8	29.3	30	30	27	153	30.5	35	35	28	149
												12846	27.8	1	33.4	46.3	50	50	43	153	47.5	50	50	44	149
												13346	33	1	39.7	54.1	60	60	50	153	55.4	60	60	51	149
												14246	41.7	2	50.2	67.3	70	70	62	153	68.5	70	70	63	149
	575-3-60	6	41	9	6	41	9	1.1	2.5	0.4		None	-	-	-	18.2	20	20	19	109	19	20	20	20	106
												11758	17	1	16.4	23.6	25	25	22	109	24.6	25	25	23	106
												13458	34	1	32.7	44	45	45	40	109	45	45	45	41	106
12 (10)	208-3-60	16	110	25	15.6	110	24	2.3	9.9	1.1		None	-	-	-	50.1	60	60	53	312	52.3	60	60	56	322
												11725	12	1	33.3	54	60	60	53	312	56.8	60	60	56	322
												12525	18.6	1	51.6	76.9	80	80	71	312	79.6	80	80	73	322
												13225	24	1	66.6	95.6	100	100	88	312	98.4	100	100	91	322
												14225	31.8	2	88.3	122.8	125	125	113	312	125.5	150	150	115	322
	230-3-60	16	110	25	15.6	110	24	2.3	9.4	1		None	-	-	-	49.6	50	60	52	321	51.6	60	60	55	315
												11725	16	1	38.5	59.9	60	60	55	321	62.4	70	70	57	315
												12525	24.8	1	59.7	86.4	90	90	79	321	88.9	90	90	82	315
												13225	32	1	77	108	110	110	99	321	110.5	125	125	102	315
												14225	42.4	2	102	139.3	150	150	128	321	141.8	150	150	130	315
	460-3-60	7.8	52	12	7.8	52	12	1.3	4.7	0.5		None	-	-	-	24.9	25	30	26	156	25.9	30	30	27	152
												11746	16.5	1	19.8	30.6	35	35	28	156	31.9	35	35	29	152
												12846	27.8	1	33.4	47.6	50	50	44	156	48.9	50	50	45	152
												13346	33	1	39.7	55.5	60	60	51	156	56.8	60	60	52	152
												14246	41.7	2	50.2	68.6	70	70	63	156	69.9	70	70	64	152
	575-3-60	5.7	38.9	9	5.8	38.9	9	1.1	4.3	0.4		None	-	-	-	19.5	20	25	21	127	20.3	25	25	22	124
												11758	17	1	16.4	25.9	30	30	24	127	26.9	30	30	25	124
												13458	34	1	32.7	46.3	50	50	43	127	47.3	50	50	43	124
14 (12.5)	208-3-60	19.6	136	31	19.6	136	31	5.8	9.9	1.1		None	-	-	-	59.8	60	70	63	367	62	70	80	66	377
												11725	12	1	33.3	59.8	60	70	63	367	62	70	80	66	377
												12525	18.6	1	51.6	76.9	80	80	71	367	79.6	80	80	73	377
												13225	24	1	66.6	95.6	100	100	88	367	98.4	100	100	91	377
												14225	31.8	2	88.3	122.8	125	125	113	367	125.5	150	150	115	377
	230-3-60	19.6	136	31	19.6	136	31	5.2	9.4	1		None	-	-	-	58.7	60	70	62	372	60.7	70	80	64	376
												11725	16	1	38.5	59.9	60	70	62	372	62.4	70	80	64	376
												12525	24.8	1	59.7	86.4	90	90	79	372	88.9	90	90	82	376
												13225	32	1	77	108	110	110	99	372	110.5	125	125	102	376
												14225	42.4	2	102	139.3	150	150	128	372	141.8	150	150	130	376
	460-3-60	8.2	66.1	13	8.2	66.1	13	2.9	4.7	0.5		None	-	-	-	26.1	30	30	28	184	27.1	30	30	29	186
												11746	16.5	1	19.8	30.6	35	35	28	184	31.9	35	35	29	186
												12846	27.8	1	33.4	47.6	50	50	44	184	48.9	50	50	45	186
												13346	33	1	39.7	55.5	60	60	51	184	56.8	60	60	52	186
												14246	41.7	2	50.2	68.6	70	70	63	184	69.9	70	70	64	186
	575-3-60	6.6	55.3	10	6.6	55.3	10	2.2	4.3	0.4		None	-	-	-	21.4	25	25	23	162	22.2	25	25	24	164
												11758	17	1	16.4	25.9	30	30	24	162	26.9	30	30	25	164
												13458	34	1	32.7	46.3	50	50	43	162	47.3	50	50	43	164

1. Minimum Circuit Ampacity.
2. Dual Element, Time Delay Type.
3. HACR type per NEC.
4. Non-fused Disconnect, Verify on the unit nameplate that the disconnect is properly sized for the application. Units with field installed electric heat kits may exceed the factory installed disconnect amperage rating.

ZXA7, ZX08-14 Medium Static Indoor Blower - With Powered Convenience Outlet

Size (Tons)	Nominal Unit Voltage	Compressor 1			Compressor 2			OD Fan Motors (each)	Supply Blower Motor	Pwr Exh Motor	Pwr Conv Outlet	Electric Heat Field Installed Kit 2EK045*				MCA[1] (Amps)	Min Fuse[2]/ Breaker[3] Size (Amps)	Max Fuse[2]/ Breaker[3] Size (Amps)	Min Discon-nect Rating[4]		MCA[1] w/Pwr Exh (Amps)	Min Fuse[2]/ Breaker[3] Size w/ Pwr Exh (Amps)	Max Fuse[2]/ Breaker[3] Size w/ Pwr Exh (Amps)	Min Discon-nect Rating[4]/ Pwr Exh	
		RLA	LRA	MCC	RLA	LRA	MCC					Model	kW	Stages	Amps				FLA	LRA				FLA	LRA
Without VFD																									
A7 (6)	208-3-60	17.6	136	27				4.4	7.5	1.1	8.6	None	-	-	-	38.2	40	50	39	189	39.3	40	50	40	191
												10625	4.9	1	13.6	38.2	40	50	39	189	39.3	40	50	40	191
												11125	7.9	1	21.9	42.1	45	50	39	189	43.5	45	50	40	191
												11625	12	1	33.3	56.4	60	60	52	189	57.8	60	60	53	191
	230-3-60	17.6	136	27				4.4	7.5	1	8.6	None	-	-	-	38.2	40	50	39	195	39.2	40	50	40	198
												10625	6.5	1	15.6	38.2	40	50	39	195	39.2	40	50	40	198
												11125	10.5	1	25.3	46.4	50	50	43	195	47.6	50	50	44	198
												11625	16	1	38.5	62.9	70	70	58	195	64.1	70	70	59	198
	460-3-60	8.5	66.1	13				2.5	3.4	0.5	8.6	None	-	-	-	18.7	20	25	19	96	19.2	20	25	20	97
												10646	6	1	7.2	18.7	20	25	15	96	19.2	20	25	15	97
												11146	11.5	1	13.8	24.2	25	25	22	96	24.8	25	25	23	97
												11446	14	1	16.8	27.9	30	30	26	96	28.6	30	30	26	97
	575-3-60	6.3	55.3	10				4.4	2.8	0.4	8.6	None	-	-	-	16.8	20	20	17	79	17.2	20	20	18	80
With VFD																									
A7 (6)	208-3-60	17.6	136	27				4.4	8.9	1.1	8.6	None	-	-	-	39.6	40	50	40	202	40.7	45	50	42	205
												10625	4.9	1	13.6	39.6	40	50	40	202	40.7	45	50	42	205
												11125	7.9	1	21.9	43.9	45	50	40	202	45.3	50	50	42	205
												11625	12	1	33.3	58.1	60	60	53	202	59.5	60	60	55	205
	230-3-60	17.6	136	27				4.4	8.2	1	8.6	None	-	-	-	38.9	40	50	40	209	39.9	40	50	41	212
												10625	6.5	1	15.6	38.9	40	50	40	209	39.9	40	50	41	212
												11125	10.5	1	25.3	47.3	50	50	43	209	48.5	50	50	45	212
												11625	16	1	38.5	63.8	70	70	59	209	65	70	70	60	212
	460-3-60	8.5	66.1	13				2.5	4.1	0.5	8.6	None	-	-	-	19.4	20	25	20	103	19.9	20	25	20	104
												10646	6	1	7.2	19.4	20	25	15	103	19.9	20	25	16	104
												11146	11.5	1	13.8	25.1	30	30	23	103	25.7	30	30	24	104
												11446	14	1	16.8	28.8	30	30	27	103	29.4	30	30	27	104
	575-3-60	6.3	55.3	10				4.4	3.2	0.4	8.6	None	-	-	-	17.2	20	20	18	83	17.6	20	20	18	84
08 (7.5)	208-3-60	13.6	83.1	21	13.6	83.1	21	2.3	8.9	1.1	8.6	None	-	-	-	48.4	50	60	52	267	50.6	60	60	54	277
												11725	12	1	33.3	58.1	60	60	53	267	60.9	70	70	56	277
												12525	18.6	1	51.6	81	90	90	75	267	83.8	90	90	77	277
												13225	24	1	66.6	99.8	100	100	92	267	102.5	110	110	94	277
												14225	31.8	2	88.3	126.9	150	150	117	267	129.6	150	150	119	277
	230-3-60	13.6	83.1	21	13.6	83.1	21	2.3	8.2	1	8.6	None	-	-	-	47.7	50	60	51	270	49.7	50	60	53	264
												11725	16	1	38.5	63.8	70	70	59	270	66.3	70	70	61	264
												12525	24.8	1	59.7	90.3	100	100	83	270	92.8	100	100	85	264
												13225	32	1	77	111.9	125	125	103	270	114.4	125	125	105	264
												14225	42.4	2	102	143.1	150	150	132	270	145.6	150	150	134	264
	460-3-60	6.1	41	10	6.1	41	10	1.3	4.1	0.5	8.6	None	-	-	-	22.6	25	25	24	130	23.6	25	25	25	127
												11746	16.5	1	19.8	32.6	35	35	30	130	33.8	35	35	31	127
												12846	27.8	1	33.4	49.6	50	50	46	130	50.8	60	60	47	127
												13346	33	1	39.7	57.4	60	60	53	130	58.7	60	60	54	127
												14246	41.7	2	50.2	70.6	80	80	65	130	71.8	80	80	66	127
	575-3-60	4.2	33	7	4.2	33	7	1.1	3.2	0.4	8.6	None	-	-	-	16.6	20	20	18	103	17.4	20	20	19	100
												11758	17	1	16.4	26.7	30	30	25	103	27.7	30	30	25	100
												13458	34	1	32.7	47	50	50	43	103	48	50	50	44	100

ZXA7, ZX08-14 Medium Static Indoor Blower - With Powered Convenience Outlet (Continued)

Size (Tons)	Nominal Unit Voltage	Compressor 1			Compressor 2			OD Fan Motors (each)	Supply Blower Motor	Pwr Exh Motor	Pwr Conv Outlet	Electric Heat Field Installed Kit 2EK045*				MCA[1] (Amps)	Min Fuse[2]/ Breaker[3] Size (Amps)	Max Fuse[2]/ Breaker[3] Size (Amps)	Min Discon-nect Rating[4]		MCA[1] w/Pwr Exh (Amps)	Min Fuse[2]/ Breaker[3] Size w/ Pwr Exh (Amps)	Max Fuse[2]/ Breaker[3] Size w/ Pwr Exh (Amps)	Min Discon-nect Rating[4]/ Pwr Exh	
		RLA	LRA	MCC	RLA	LRA	MCC					Model	kW	Stages	Amps				FLA	LRA				FLA	LRA
09 (8.5)	208-3-60	14.5	98	23	14.5	98	23	2.3	7	1.1	8.6	None	-	-	-	48.5	50	60	52	280	50.7	60	60	54	290
												11725	12	1	33.3	55.8	60	60	52	280	58.5	60	60	54	290
												12525	18.6	1	51.6	78.6	80	80	72	280	81.4	90	90	75	290
												13225	24	1	66.6	97.4	100	100	90	280	100.1	110	110	92	290
												14225	31.8	2	88.3	124.5	125	125	115	280	127.3	150	150	117	290
	230-3-60	14.5	98	23	14.5	98	23	2.3	7.2	1	8.6	None	-	-	-	48.7	50	60	52	282	50.7	60	60	54	277
												11725	16	1	38.5	62.5	70	70	58	282	65	70	70	60	277
												12525	24.8	1	59.7	89	90	90	82	282	91.5	100	100	84	277
												13225	32	1	77	110.6	125	125	102	282	113.1	125	125	104	277
												14225	42.4	2	102	141.9	150	150	131	282	144.4	150	150	133	277
	460-3-60	6.3	55	10	6.3	55	10	1.3	3.6	0.5	8.6	None	-	-	-	22.6	25	25	24	155	23.6	25	25	25	151
												11746	16.5	1	19.8	31.9	35	35	29	155	33.2	35	35	31	151
												12846	27.8	1	33.4	48.9	50	50	45	155	50.2	60	60	46	151
												13346	33	1	39.7	56.8	60	60	52	155	58.1	60	60	53	151
												14246	41.7	2	50.2	69.9	70	70	64	155	71.2	80	80	65	151
	575-3-60	6	41	9	6	41	9	1.1	2.5	0.4	8.6	None	-	-	-	19.9	20	25	21	111	20.7	25	25	22	108
												11758	17	1	16.4	25.8	30	30	24	111	26.8	30	30	25	108
												13458	34	1	32.7	46.2	50	50	42	111	47.2	50	50	43	108
12 (10)	208-3-60	16	110	25	15.6	110	24	2.3	9.9	1.1	8.6	None	-	-	-	54.4	60	70	58	316	56.6	60	70	60	326
												11725	12	1	33.3	59.4	60	70	58	316	62.1	70	70	60	326
												12525	18.6	1	51.6	82.3	90	90	76	316	85	90	90	78	326
												13225	24	1	66.6	101	110	110	93	316	103.8	110	110	95	326
												14225	31.8	2	88.3	128.1	150	150	118	316	130.9	150	150	120	326
	230-3-60	16	110	25	15.6	110	24	2.3	9.4	1	8.6	None	-	-	-	53.9	60	60	57	325	55.9	60	70	60	320
												11725	16	1	38.5	65.3	70	70	60	325	67.8	70	70	62	320
												12525	24.8	1	59.7	91.8	100	100	84	325	94.3	100	100	87	320
												13225	32	1	77	113.4	125	125	104	325	115.9	125	125	107	320
												14225	42.4	2	102	144.6	150	150	133	325	147.1	150	150	135	320
	460-3-60	7.8	52	12	7.8	52	12	1.3	4.7	0.5	8.6	None	-	-	-	27.1	30	30	29	158	28.1	30	30	30	154
												11746	16.5	1	19.8	33.3	35	35	31	158	34.6	35	35	32	154
												12846	27.8	1	33.4	50.3	60	60	46	158	51.6	60	60	47	154
												13346	33	1	39.7	58.2	60	60	54	158	59.4	60	60	55	154
												14246	41.7	2	50.2	71.3	80	80	66	158	72.6	80	80	67	154
	575-3-60	5.7	38.9	9	5.8	38.9	9	1.1	4.3	0.4	8.6	None	-	-	-	21.2	25	25	23	129	22	25	25	24	126
												11758	17	1	16.4	28	30	30	26	129	29	30	30	27	126
												13458	34	1	32.7	48.4	50	50	45	129	49.4	50	50	45	126
14 (12.5)	208-3-60	19.6	136	31	19.6	136	31	5.8	9.9	1.1	8.6	None	-	-	-	64.1	70	80	68	371	66.3	70	80	71	381
												11725	12	1	33.3	64.1	70	80	68	371	66.3	70	80	71	381
												12525	18.6	1	51.6	82.3	90	90	76	371	85	90	90	78	381
												13225	24	1	66.6	101	110	110	93	371	103.8	110	110	95	381
												14225	31.8	2	88.3	128.1	150	150	118	371	130.9	150	150	120	381
	230-3-60	19.6	136	31	19.6	136	31	5.2	9.4	1	8.6	None	-	-	-	63	70	80	67	376	65	70	80	69	381
												11725	16	1	38.5	65.3	70	80	67	376	67.8	70	80	69	381
												12525	24.8	1	59.7	91.8	100	100	84	376	94.3	100	100	87	381
												13225	32	1	77	113.4	125	125	104	376	115.9	125	125	107	381
												14225	42.4	2	102	144.6	150	150	133	376	147.1	150	150	135	381
	460-3-60	8.2	66.1	13	8.2	66.1	13	2.9	4.7	0.5	8.6	None	-	-	-	28.3	30	35	30	186	29.3	30	35	31	188
												11746	16.5	1	19.8	33.3	35	35	31	186	34.6	35	35	32	188
												12846	27.8	1	33.4	50.3	60	60	46	186	51.6	60	60	47	188
												13346	33	1	39.7	58.2	60	60	54	186	59.4	60	60	55	188
												14246	41.7	2	50.2	71.3	80	80	66	186	72.6	80	80	67	188
	575-3-60	6.6	55.3	10	6.6	55.3	10	2.2	4.3	0.4	8.6	None	-	-	-	23.1	25	25	25	164	23.9	25	25	26	165
												11758	17	1	16.4	28	30	30	26	164	29	30	30	27	165
												13458	34	1	32.7	48.4	50	50	45	164	49.4	50	50	45	165

1. Minimum Circuit Ampacity.
2. Dual Element, Time Delay Type.
3. HACR type per NEC.
4. Non-fused Disconnect, Verify on the unit nameplate that the disconnect is properly sized for the application. Units with field installed electric heat kits may exceed the factory installed disconnect amperage rating.

ZXA7, 08-14 Hi Static Indoor Blower - Without Powered Convenience Outlet

Size (Tons)	Nominal Unit Voltage	Compressor 1			Compressor 2			OD Fan Motors (each)	Supply Blower Motor	Pwr Exh Motor	Pwr Conv Outlet	Electric Heat Field Installed Kit 2EK045*				MCA[1] (Amps)	Min Fuse[2]/ Breaker[3] Size (Amps)	Max Fuse[2]/ Breaker[3] Size (Amps)	Min Discon-nect Rating[4]		MCA[1] w/Pwr Exh (Amps)	Min Fuse[2]/ Breaker[3] Size w/ Pwr Exh (Amps)	Max Fuse[2]/ Breaker[3] Size w/ Pwr Exh (Amps)	Min Discon-nect Rating[4]/ Pwr Exh	
		RLA	LRA	MCC	RLA	LRA	MCC					Model	kW	Stages	Amps				FLA	LRA				FLA	LRA
Without VFD																									
A7 (6)	208-3-60	17.6	136	27				4.4	10.2	1.1		None	-	-	-	36.6	40	50	37	199	37.7	40	50	38	202
												10625	4.9	1	13.6	36.6	40	50	37	199	37.7	40	50	38	202
												11125	7.9	1	21.9	40.1	45	50	37	199	41.5	45	50	38	202
												11625	12	1	33.3	54.4	60	60	50	199	55.8	60	60	51	202
	230-3-60	17.6	136	27				4.4	10.2	1		None	-	-	-	36.6	40	50	37	205	37.6	40	50	38	207
												10625	6.5	1	15.6	36.6	40	50	37	205	37.6	40	50	38	207
												11125	10.5	1	25.3	44.4	45	50	41	205	45.6	50	50	42	207
												11625	16	1	38.5	60.9	70	70	56	205	62.1	70	70	57	207
	460-3-60	8.5	66.1	13				2.5	4.8	0.5		None	-	-	-	17.9	20	25	18	101	18.4	20	25	19	102
												10646	6	1	7.2	17.9	20	25	14	101	18.4	20	25	14	102
												11146	11.5	1	13.8	23.3	25	25	21	101	23.9	25	25	22	102
												11446	14	1	16.8	27	30	30	25	101	27.6	30	30	25	102
	575-3-60	6.3	55.3	10				4.4	3.4	0.4		None	-	-	-	15.7	20	20	16	83	16.1	20	20	17	84
With VFD																									
A7 (6)	208-3-60	17.6	136	27				4.4	9.9	1.1		None	-	-	-	36.3	40	50	37	209	37.4	40	50	38	211
												10625	4.9	1	13.6	36.3	40	50	37	209	37.4	40	50	38	211
												11125	7.9	1	21.9	39.8	40	50	37	209	41.1	45	50	38	211
												11625	12	1	33.3	54	60	60	50	209	55.4	60	60	51	211
	230-3-60	17.6	136	27				4.4	9.4	1		None	-	-	-	35.8	40	50	36	217	36.8	40	50	37	219
												10625	6.5	1	15.6	35.8	40	50	36	217	36.8	40	50	37	219
												11125	10.5	1	25.3	43.4	45	50	40	217	44.6	45	50	41	219
												11625	16	1	38.5	59.9	60	60	55	217	61.1	70	70	56	219
	460-3-60	8.5	66.1	13				2.5	4.7	0.5		None	-	-	-	17.8	20	25	18	106	18.3	20	25	19	108
												10646	6	1	7.2	17.8	20	25	14	106	18.3	20	25	14	108
												11146	11.5	1	13.8	23.1	25	25	21	106	23.8	25	25	22	108
												11446	14	1	16.8	26.9	30	30	25	106	27.5	30	30	25	108
	575-3-60	6.3	55.3	10				4.4	4.3	0.4		None	-	-	-	16.6	20	20	17	95	17	20	20	18	96
08 (7.5)	208-3-60	13.6	83.1	21	13.6	83.1	21	2.3	9.9	1.1		None	-	-	-	45.1	50	50	48	258	47.3	50	50	50	268
												11725	12	1	33.3	54	60	60	50	258	56.8	60	60	52	268
												12525	18.6	1	51.6	76.9	80	80	71	258	79.6	80	80	73	268
												13225	24	1	66.6	95.6	100	100	88	258	98.4	100	100	91	268
												14225	31.8	2	88.3	122.8	125	125	113	258	125.5	150	150	115	268
	230-3-60	13.6	83.1	21	13.6	83.1	21	2.3	9.4	1		None	-	-	-	44.6	45	50	47	267	46.6	50	60	50	261
												11725	16	1	38.5	59.9	60	60	55	267	62.4	70	70	57	261
												12525	24.8	1	59.7	86.4	90	90	79	267	88.9	90	90	82	261
												13225	32	1	77	108	110	110	99	267	110.5	125	125	102	261
												14225	42.4	2	102	139.3	150	150	128	267	141.8	150	150	130	261
	460-3-60	6.1	41	10	6.1	41	10	1.3	4.7	0.5		None	-	-	-	21	25	25	22	134	22	25	25	24	130
												11746	16.5	1	19.8	30.6	35	35	28	134	31.9	35	35	29	130
												12846	27.8	1	33.4	47.6	50	50	44	134	48.9	50	50	45	130
												13346	33	1	39.7	55.5	60	60	51	134	56.8	60	60	52	130
												14246	41.7	2	50.2	68.6	70	70	63	134	69.9	70	70	64	130
	575-3-60	4.2	33	7	4.2	33	7	1.1	4.3	0.4		None	-	-	-	16	20	20	17	115	16.8	20	20	18	113
												11758	17	1	16.4	25.9	30	30	24	115	26.9	30	30	25	113
												13458	34	1	32.7	46.3	50	50	43	115	47.3	50	50	43	113

ZXA7, 08-14 Hi Static Indoor Blower - Without Powered Convenience Outlet (Continued)

Size (Tons)	Nominal Unit Voltage	Compressor 1			Compressor 2			OD Fan Motors (each)	Supply Blower Motor	Pwr Exh Motor	Pwr Conv Outlet	Electric Heat Field Installed Kit 2EK045*				MCA[1] (Amps)	Min Fuse[2]/ Breaker[3] Size (Amps)	Max Fuse[2]/ Breaker[3] Size (Amps)	Min Discon-nect Rating[4]		MCA[1] w/Pwr Exh (Amps)	Min Fuse[2]/ Breaker[3] Size w/ Pwr Exh (Amps)	Max Fuse[2]/ Breaker[3] Size w/ Pwr Exh (Amps)	Min Discon-nect Rating[4]/ Pwr Exh	
		RLA	LRA	MCC	RLA	LRA	MCC					Model	kW	Stages	Amps				FLA	LRA				FLA	LRA
09 (8.5)	208-3-60	14.5	98	23	14.5	98	23	2.3	9.9	1.1		None	-	-	-	47.1	50	60	50	288	49.3	50	60	53	298
												11725	12	1	33.3	54	60	60	50	288	56.8	60	60	53	298
												12525	18.6	1	51.6	76.9	80	80	71	288	79.6	80	80	73	298
												13225	24	1	66.6	95.6	100	100	88	288	98.4	100	100	91	298
												14225	31.8	2	88.3	122.8	125	125	113	288	125.5	150	150	115	298
	230-3-60	14.5	98	23	14.5	98	23	2.3	9.4	1		None	-	-	-	46.6	50	60	49	297	48.6	50	60	52	291
												11725	16	1	38.5	59.9	60	60	55	297	62.4	70	70	57	291
												12525	24.8	1	59.7	86.4	90	90	79	297	88.9	90	90	82	291
												13225	32	1	77	108	110	110	99	297	110.5	125	125	102	291
												14225	42.4	2	102	139.3	150	150	128	297	141.8	150	150	130	291
	460-3-60	6.3	55	10	6.3	55	10	1.3	4.7	0.5		None	-	-	-	21.5	25	25	23	162	22.5	25	25	24	158
												11746	16.5	1	19.8	30.6	35	35	28	162	31.9	35	35	29	158
												12846	27.8	1	33.4	47.6	50	50	44	162	48.9	50	50	45	158
												13346	33	1	39.7	55.5	60	60	51	162	56.8	60	60	52	158
												14246	41.7	2	50.2	68.6	70	70	63	162	69.9	70	70	64	158
	575-3-60	6	41	9	6	41	9	1.1	4.3	0.4		None	-	-	-	20	25	25	21	131	20.8	25	25	22	129
												11758	17	1	16.4	25.9	30	30	24	131	26.9	30	30	25	129
												13458	34	1	32.7	46.3	50	50	43	131	47.3	50	50	43	129
12 (10)	208-3-60	16	110	25	15.6	110	24	2.3	13.5	1.1		None	-	-	-	53.7	60	60	57	342	55.9	60	70	60	352
												11725	12	1	33.3	58.5	60	60	57	342	61.3	70	70	60	352
												12525	18.6	1	51.6	81.4	90	90	75	342	84.1	90	90	77	352
												13225	24	1	66.6	100.1	110	110	92	342	102.9	110	110	95	352
												14225	31.8	2	88.3	127.3	150	150	117	342	130	150	150	120	352
	230-3-60	16	110	25	15.6	110	24	2.3	13.4	1		None	-	-	-	53.6	60	60	57	342	55.6	60	70	59	337
												11725	16	1	38.5	64.9	70	70	60	342	67.4	70	70	62	337
												12525	24.8	1	59.7	91.4	100	100	84	342	93.9	100	100	86	337
												13225	32	1	77	113	125	125	104	342	115.5	125	125	106	337
												14225	42.4	2	102	144.3	150	150	133	342	146.8	150	150	135	337
	460-3-60	7.8	52	12	7.8	52	12	1.3	6.7	0.5		None	-	-	-	26.9	30	30	29	167	27.9	30	30	30	163
												11746	16.5	1	19.8	33.1	35	35	30	167	34.4	35	35	32	163
												12846	27.8	1	33.4	50.1	60	60	46	167	51.4	60	60	47	163
												13346	33	1	39.7	58	60	60	53	167	59.3	60	60	55	163
												14246	41.7	2	50.2	71.1	80	80	65	167	72.4	80	80	67	163
	575-3-60	5.7	38.9	9	5.8	38.9	9	1.1	5.4	0.4		None	-	-	-	20.6	25	25	22	127	21.4	25	25	23	124
												11758	17	1	16.4	27.3	30	30	25	127	28.3	30	30	26	124
												13458	34	1	32.7	47.6	50	50	44	127	48.6	50	50	45	124
14 (12.5)	208-3-60	19.6	136	31	19.6	136	31	5.8	13.5	1.1		None	-	-	-	63.4	70	80	67	397	65.6	70	80	70	407
												11725	12	1	33.3	63.4	70	80	67	397	65.6	70	80	70	407
												12525	18.6	1	51.6	81.4	90	90	75	397	84.1	90	90	77	407
												13225	24	1	66.6	100.1	110	110	92	397	102.9	110	110	95	407
												14225	31.8	2	88.3	127.3	150	150	117	397	130	150	150	120	407
	230-3-60	19.6	136	31	19.6	136	31	5.2	13.4	1		None	-	-	-	62.7	70	80	66	393	64.7	70	80	69	398
												11725	16	1	38.5	64.9	70	80	66	393	67.4	70	80	69	398
												12525	24.8	1	59.7	91.4	100	100	84	393	93.9	100	100	86	398
												13225	32	1	77	113	125	125	104	393	115.5	125	125	106	398
												14225	42.4	2	102	144.3	150	150	133	393	146.8	150	150	135	398
	460-3-60	8.2	66.1	13	8.2	66.1	13	2.9	6.7	0.5		None	-	-	-	28.1	30	35	30	194	29.1	30	35	31	196
												11746	16.5	1	19.8	33.1	35	35	30	194	34.4	35	35	32	196
												12846	27.8	1	33.4	50.1	60	60	46	194	51.4	60	60	47	196
												13346	33	1	39.7	58	60	60	53	194	59.3	60	60	55	196
												14246	41.7	2	50.2	71.1	80	80	65	194	72.4	80	80	67	196
	575-3-60	6.6	55.3	10	6.6	55.3	10	2.2	5.4	0.4		None	-	-	-	22.5	25	25	24	162	23.3	25	25	25	164
												11758	17	1	16.4	27.3	30	30	25	162	28.3	30	30	26	164
												13458	34	1	32.7	47.6	50	50	44	162	48.6	50	50	45	164

1. Minimum Circuit Ampacity.
2. Dual Element, Time Delay Type.
3. HACR type per NEC.
4. Non-fused Disconnect, Verify on the unit nameplate that the disconnect is properly sized for the application. Units with field installed electric heat kits may exceed the factory installed disconnect amperage rating.

ZXA7, 08-14 Hi Static Indoor Blower - With Powered Convenience Outlet

Size (Tons)	Nominal Unit Voltage	Compressor 1			Compressor 2			OD Fan Motors (each)	Supply Blower Motor	Pwr Exh Motor	Pwr Conv Outlet	Electric Heat Field Installed Kit 2EK045*				MCA[1] (Amps)	Min Fuse[2]/ Breaker[3] Size (Amps)	Max Fuse[2]/ Breaker[3] Size (Amps)	Min Discon-nect Rating[4]		MCA[1] w/Pwr Exh (Amps)	Min Fuse[2]/ Breaker[3] Size w/ Pwr Exh (Amps)	Max Fuse[2]/ Breaker[3] Size w/ Pwr Exh (Amps)	Min Discon-nect Rating[4]/ Pwr Exh	
		RLA	LRA	MCC	RLA	LRA	MCC					Model	kW	Stages	Amps				FLA	LRA				FLA	LRA
Without VFD																									
A7 (6)	208-3-60	17.6	136	27				4.4	10.2	1.1	8.6	None	-	-	-	40.9	45	50	42	204	42	45	50	43	206
												10625	4.9	1	13.6	40.9	45	50	42	204	42	45	50	43	206
												11125	7.9	1	21.9	45.5	50	50	42	204	46.9	50	50	43	206
												11625	12	1	33.3	59.8	60	60	55	204	61.1	70	70	56	206
	230-3-60	17.6	136	27				4.4	10.2	1	8.6	None	-	-	-	40.9	45	50	42	209	41.9	45	50	43	212
												10625	6.5	1	15.6	40.9	45	50	42	209	41.9	45	50	43	212
												11125	10.5	1	25.3	49.8	50	50	46	209	51	60	60	47	212
												11625	16	1	38.5	66.3	70	70	61	209	67.5	70	70	62	212
	460-3-60	8.5	66.1	13				2.5	4.8	0.5	8.6	None	-	-	-	20.1	25	25	21	103	20.6	25	25	21	104
												10646	6	1	7.2	20.1	25	25	16	103	20.6	25	25	17	104
												11146	11.5	1	13.8	25.9	30	30	24	103	26.6	30	30	24	104
												11446	14	1	16.8	29.7	30	30	27	103	30.3	35	35	28	104
	575-3-60	6.3	55.3	10				4.4	3.4	0.4	8.6	None	-	-	-	17.4	20	20	18	85	17.8	20	20	19	86
With VFD																									
A7 (6)	208-3-60	17.6	136	27				4.4	9.9	1.1	8.6	None	-	-	-	40.6	45	50	42	213	41.7	45	50	43	215
												10625	4.9	1	13.6	40.6	45	50	42	213	41.7	45	50	43	215
												11125	7.9	1	21.9	45.1	50	50	42	213	46.5	50	50	43	215
												11625	12	1	33.3	59.4	60	60	55	213	60.8	70	70	56	215
	230-3-60	17.6	136	27				4.4	9.4	1	8.6	None	-	-	-	40.1	45	50	41	221	41.1	45	50	42	223
												10625	6.5	1	15.6	40.1	45	50	41	221	41.1	45	50	42	223
												11125	10.5	1	25.3	48.8	50	50	45	221	50	50	50	46	223
												11625	16	1	38.5	65.3	70	70	60	221	66.5	70	70	61	223
	460-3-60	8.5	66.1	13				2.5	4.7	0.5	8.6	None	-	-	-	20	25	25	21	109	20.5	25	25	21	110
												10646	6	1	7.2	20	20	25	16	109	20.5	25	25	17	110
												11146	11.5	1	13.8	25.8	30	30	24	109	26.4	30	30	24	110
												11446	14	1	16.8	29.6	30	30	27	109	30.2	35	35	28	110
	575-3-60	6.3	55.3	10				4.4	4.3	0.4	8.6	None	-	-	-	18.3	20	20	19	97	18.7	20	20	20	98
08 (7.5)	208-3-60	13.6	83.1	21	13.6	83.1	21	2.3	9.9	1.1	8.6	None	-	-	-	49.4	50	60	53	262	51.6	60	60	55	272
												11725	12	1	33.3	59.4	60	60	55	262	62.1	70	70	57	272
												12525	18.6	1	51.6	82.3	90	90	76	262	85	90	90	78	272
												13225	24	1	66.6	101	110	110	93	262	103.8	110	110	95	272
												14225	31.8	2	88.3	128.1	150	150	118	262	130.9	150	150	120	272
	230-3-60	13.6	83.1	21	13.6	83.1	21	2.3	9.4	1	8.6	None	-	-	-	48.9	50	60	52	271	50.9	60	60	55	266
												11725	16	1	38.5	65.3	70	70	60	271	67.8	70	70	62	266
												12525	24.8	1	59.7	91.8	100	100	84	271	94.3	100	100	87	266
												13225	32	1	77	113.4	125	125	104	271	115.9	125	125	107	266
												14225	42.4	2	102	144.6	150	150	133	271	147.1	150	150	135	266
	460-3-60	6.1	41	10	6.1	41	10	1.3	4.7	0.5	8.6	None	-	-	-	23.2	25	25	25	136	24.2	25	25	26	132
												11746	16.5	1	19.8	33.3	35	35	31	136	34.6	35	35	32	132
												12846	27.8	1	33.4	50.3	60	60	46	136	51.6	60	60	47	132
												13346	33	1	39.7	58.2	60	60	54	136	59.4	60	60	55	132
												14246	41.7	2	50.2	71.3	80	80	66	136	72.6	80	80	67	132
	575-3-60	4.2	33	7	4.2	33	7	1.1	4.3	0.4	8.6	None	-	-	-	17.7	20	20	19	117	18.5	20	20	20	114
												11758	17	1	16.4	28	30	30	26	117	29	30	30	27	114
												13458	34	1	32.7	48.4	50	50	45	117	49.4	50	50	45	114

ZXA7, 08-14 Hi Static Indoor Blower - With Powered Convenience Outlet (Continued)

Size (Tons)	Nominal Unit Voltage	Compressor 1			Compressor 2			OD Fan Motors (each)	Supply Blower Motor	Pwr Exh Motor	Pwr Conv Outlet	Electric Heat Field Installed Kit 2EK045*				MCA[1] (Amps)	Min Fuse[2]/ Breaker[3] Size (Amps)	Max Fuse[2]/ Breaker[3] Size (Amps)	Min Discon-nect Rating[4]		MCA[1] w/Pwr Exh (Amps)	Min Fuse[2]/ Breaker[3] Size w/ Pwr Exh (Amps)	Max Fuse[2]/ Breaker[3] Size w/ Pwr Exh (Amps)	Min Discon-nect Rating[4]/ Pwr Exh	
		RLA	LRA	MCC	RLA	LRA	MCC					Model	kW	Stages	Amps				FLA	LRA				FLA	LRA
09 (8.5)	208-3-60	14.5	98	23	14.5	98	23	2.3	9.9	1.1	8.6	None	-	-	-	51.4	60	60	55	292	53.6	60	60	58	302
												11725	12	1	33.3	59.4	60	60	55	292	62.1	70	70	58	302
												12525	18.6	1	51.6	82.3	90	90	76	292	85	90	90	78	302
												13225	24	1	66.6	101	110	110	93	292	103.8	110	110	95	302
												14225	31.8	2	88.3	128.1	150	150	118	292	130.9	150	150	120	302
	230-3-60	14.5	98	23	14.5	98	23	2.3	9.4	1	8.6	None	-	-	-	50.9	60	60	54	301	52.9	60	60	57	296
												11725	16	1	38.5	65.3	70	70	60	301	67.8	70	70	62	296
												12525	24.8	1	59.7	91.8	100	100	84	301	94.3	100	100	87	296
												13225	32	1	77	113.4	125	125	104	301	115.9	125	125	107	296
												14225	42.4	2	102	144.6	150	150	133	301	147.1	150	150	135	296
	460-3-60	6.3	55	10	6.3	55	10	1.3	4.7	0.5	8.6	None	-	-	-	23.7	25	25	25	164	24.7	25	25	27	160
												11746	16.5	1	19.8	33.3	35	35	31	164	34.6	35	35	32	160
												12846	27.8	1	33.4	50.3	60	60	46	164	51.6	60	60	47	160
												13346	33	1	39.7	58.2	60	60	54	164	59.4	60	60	55	160
												14246	41.7	2	50.2	71.3	80	80	66	164	72.6	80	80	67	160
	575-3-60	6	41	9	6	41	9	1.1	4.3	0.4	8.6	None	-	-	-	21.7	25	25	23	133	22.5	25	25	24	130
												11758	17	1	16.4	28	30	30	26	133	29	30	30	27	130
												13458	34	1	32.7	48.4	50	50	45	133	49.4	50	50	45	130
12 (10)	208-3-60	16	110	25	15.6	110	24	2.3	13.5	1.1	8.6	None	-	-	-	58	60	70	62	346	60.2	70	70	65	356
												11725	12	1	33.3	63.9	70	70	62	346	66.6	70	70	65	356
												12525	18.6	1	51.6	86.8	90	90	80	346	89.5	90	90	82	356
												13225	24	1	66.6	105.5	110	110	97	346	108.3	110	110	100	356
												14225	31.8	2	88.3	132.6	150	150	122	346	135.4	150	150	125	356
	230-3-60	16	110	25	15.6	110	24	2.3	13.4	1	8.6	None	-	-	-	57.9	60	70	62	346	59.9	60	70	64	341
												11725	16	1	38.5	70.3	80	80	65	346	72.8	80	80	67	341
												12525	24.8	1	59.7	96.8	100	100	89	346	99.3	100	100	91	341
												13225	32	1	77	118.4	125	125	109	346	120.9	125	125	111	341
												14225	42.4	2	102	149.6	150	150	138	346	152.1	175	175	140	341
	460-3-60	7.8	52	12	7.8	52	12	1.3	6.7	0.5	8.6	None	-	-	-	29.1	30	35	31	169	30.1	35	35	32	165
												11746	16.5	1	19.8	35.8	40	40	33	169	37.1	40	40	34	165
												12846	27.8	1	33.4	52.8	60	60	49	169	54.1	60	60	50	165
												13346	33	1	39.7	60.7	70	70	56	169	61.9	70	70	57	165
												14246	41.7	2	50.2	73.8	80	80	68	169	75.1	80	80	69	165
	575-3-60	5.7	38.9	9	5.8	38.9	9	1.1	5.4	0.4	8.6	None	-	-	-	22.3	25	25	24	129	23.1	25	25	25	126
												11758	17	1	16.4	29.4	30	30	27	129	30.4	35	35	28	126
												13458	34	1	32.7	49.8	50	50	46	129	50.8	60	60	47	126
14 (12.5)	208-3-60	19.6	136	31	19.6	136	31	5.8	13.5	1.1	8.6	None	-	-	-	67.7	70	80	72	401	69.9	70	80	75	411
												11725	12	1	33.3	67.7	70	80	72	401	69.9	70	80	75	411
												12525	18.6	1	51.6	86.8	90	90	80	401	89.5	90	90	82	411
												13225	24	1	66.6	105.5	110	110	97	401	108.3	110	110	100	411
												14225	31.8	2	88.3	132.6	150	150	122	401	135.4	150	150	125	411
	230-3-60	19.6	136	31	19.6	136	31	5.2	13.4	1	8.6	None	-	-	-	67	70	80	71	397	69	70	80	74	402
												11725	16	1	38.5	70.3	80	80	71	397	72.8	80	80	74	402
												12525	24.8	1	59.7	96.8	100	100	89	397	99.3	100	100	91	402
												13225	32	1	77	118.4	125	125	109	397	120.9	125	125	111	402
												14225	42.4	2	102	149.6	150	150	138	397	152.1	175	175	140	402
	460-3-60	8.2	66.1	13	8.2	66.1	13	2.9	6.7	0.5	8.6	None	-	-	-	30.3	35	35	32	196	31.3	35	35	34	199
												11746	16.5	1	19.8	35.8	40	40	33	196	37.1	40	40	34	199
												12846	27.8	1	33.4	52.8	60	60	49	196	54.1	60	60	50	199
												13346	33	1	39.7	60.7	70	70	56	196	61.9	70	70	57	199
												14246	41.7	2	50.2	73.8	80	80	68	196	75.1	80	80	69	199
	575-3-60	6.6	55.3	10	6.6	55.3	10	2.2	5.4	0.4	8.6	None	-	-	-	24.2	25	30	26	164	25	25	30	27	165
												11758	17	1	16.4	29.4	30	30	27	164	30.4	35	35	28	165
												13458	34	1	32.7	49.8	50	50	46	164	50.8	60	60	47	165

1. Minimum Circuit Ampacity.
2. Dual Element, Time Delay Type.
3. HACR type per NEC.
4. Non-fused Disconnect, Verify on the unit nameplate that the disconnect is properly sized for the application. Units with field installed electric heat kits may exceed the factory installed disconnect amperage rating.

ZY04-12 Standard Static Indoor Blower - Without Powered Convenience Outlet

Size (Tons)	Nominal Unit Voltage	Compressor 1			Compressor 2			OD Fan Motors (each)	Supply Blower Motor	Pwr Exh Motor	Pwr Conv Outlet	Electric Heat Field Installed Kit 2EK045*				MCA[1] (Amps)	Min Fuse[2]/ Breaker[3] Size (Amps)	Max Fuse[2]/ Breaker[3] Size (Amps)	Min Discon-nect Rating[4]		MCA[1] w/Pwr Exh (Amps)	Min Fuse[2]/ Breaker[3] Size w/ Pwr Exh (Amps)	Max Fuse[2]/ Breaker[3] Size w/ Pwr Exh (Amps)	Min Discon-nect Rating[4]/ Pwr Exh	
		RLA	LRA	MCC	RLA	LRA	MCC					Model	kW	Stages	Amps				FLA	LRA				FLA	LRA
04 (3)	208-1-60	16.7	79	26				1.4	6.6	1.5		None	-	-	-	28.9	30	45	28	84	30.4	35	45	30	88
												10625	4.9	1	23.6	37.8	40	45	35	84	39.6	40	45	36	88
												11125	7.9	1	38	55.8	60	60	51	84	57.6	60	60	53	88
	230-1-60	16.7	79	26				1.4	6	1.3		None	-	-	-	28.3	30	40	28	84	29.6	30	45	29	87
												10625	6.5	1	27.1	41.4	45	45	38	84	43	45	45	40	87
												11125	10.5	1	43.8	62.3	70	70	57	84	63.9	70	70	59	87
	208-3-60	10.4	73	16				1.4	6.6	1.1		None	-	-	-	21	25	30	21	78	22.1	25	30	22	81
												10625	4.9	1	13.6	25.3	30	30	23	78	26.6	30	30	24	81
												11125	7.9	1	21.9	35.6	40	40	33	78	37	40	40	34	81
												11625	12	1	33.3	49.9	50	50	46	78	51.3	60	60	47	81
	230-3-60	10.4	73	16				1.4	6	1		None	-	-	-	20.4	25	30	20	78	21.4	25	30	22	81
												10625	6.5	1	15.6	27	30	30	25	78	28.3	30	30	26	81
												11125	10.5	1	25.3	39.1	40	40	36	78	40.4	45	45	37	81
												11625	16	1	38.5	55.6	60	60	51	78	56.9	60	60	52	81
	460-3-60	5.8	38	9				0.8	3.2	0.5		None	-	-	-	11.3	15	15	11	42	11.8	15	15	12	43
												10646	6	1	7.2	13	15	15	12	42	13.6	15	15	13	43
												11146	11.5	1	13.8	21.3	25	25	20	42	21.9	25	25	20	43
												11446	14	1	16.8	25	25	25	23	42	25.6	30	30	24	43
	575-3-60	3.8	36.5	6				0.6	6	0.4		None	-	-	-	7.8	15	15	8	39	8.2	15	15	8	40
												11058	9.2	1	8.9	14.1	15	15	13	39	14.6	15	15	13	40
												11458	13.8	1	13.3	19.6	20	20	18	39	20.1	25	25	19	40
05 (4)	208-1-60	21.8	117	34				1.4	8.4	1.5		None	-	-	-	37.1	40	50	36	122	38.6	40	60	38	126
												10625	4.9	1	23.6	40	40	50	37	122	41.9	45	60	39	126
												11125	7.9	1	38	58	60	60	53	122	59.9	60	60	55	126
	230-1-60	21.8	117	34				1.4	7.6	1.3		None	-	-	-	36.3	40	50	35	122	37.6	40	50	37	125
												10625	6.5	1	27.1	43.4	45	50	40	122	45	45	50	41	125
												11125	10.5	1	43.8	64.3	70	70	59	122	65.9	70	70	61	125
	208-3-60	13.7	83.1	21				1.4	8.4	1.1		None	-	-	-	26.9	30	40	27	88	28	30	40	28	91
												10625	4.9	1	13.6	27.5	30	40	27	88	28.9	30	40	28	91
												11125	7.9	1	21.9	37.9	40	40	35	88	39.3	40	40	36	91
												11625	12	1	33.3	52.1	60	60	48	88	53.5	60	60	49	91
	230-3-60	13.7	83.1	21				1.4	7.6	1		None	-	-	-	26.1	30	35	26	88	27.1	30	40	27	91
												10625	6.5	1	15.6	29	30	35	27	88	30.3	35	40	28	91
												11125	10.5	1	25.3	41.1	45	45	38	88	42.4	45	45	39	91
												11625	16	1	38.5	57.6	60	60	53	88	58.9	60	60	54	91
	460-3-60	6.2	41	10				0.8	4	0.5		None	-	-	-	12.6	15	15	13	45	13.1	15	15	13	46
												10646	6	1	7.2	14	15	15	13	45	14.6	15	15	13	46
												11146	11.5	1	13.8	22.3	25	25	20	45	22.9	25	25	21	46
												11446	14	1	16.8	26	30	30	24	45	26.6	30	30	24	46
	575-3-60	4.8	33	8				0.6	7.6	0.4		None	-	-	-	9.6	15	15	10	35	10	15	15	10	36
												11058	9.2	1	8.9	14.9	15	15	14	35	15.4	20	20	14	36
												11458	13.8	1	13.3	20.4	25	25	19	35	20.9	25	25	19	36

ZY04-12 Standard Static Indoor Blower - Without Powered Convenience Outlet (Continued)

Size (Tons)	Nominal Unit Voltage	Compressor 1			Compressor 2			OD Fan Motors (each)	Supply Blower Motor	Pwr Exh Motor	Pwr Conv Outlet	Electric Heat Field Installed Kit 2EK045*				MCA[1] (Amps)	Min Fuse[2]/ Breaker[3] Size (Amps)	Max Fuse[2]/ Breaker[3] Size (Amps)	Min Discon-nect Rating[4]		MCA[1] w/Pwr Exh (Amps)	Min Fuse[2]/ Breaker[3] Size w/ Pwr Exh (Amps)	Max Fuse[2]/ Breaker[3] Size w/ Pwr Exh (Amps)	Min Discon-nect Rating[4]/ Pwr Exh	
		RLA	LRA	MCC	RLA	LRA	MCC					Model	kW	Stages	Amps				FLA	LRA				FLA	LRA
06 (5)	208-1-60	25	134	39				2.3	8.4	1.5		None	-	-	-	42	45	60	41	141	43.5	45	60	43	144
												10625	4.9	1	23.6	42	45	60	41	141	43.5	45	60	43	144
												11125	7.9	1	38	58	60	60	53	141	59.9	60	60	55	144
	230-1-60	25	134	39				2.3	7.6	1.3		None	-	-	-	41.2	45	60	40	141	42.5	45	60	42	144
												10625	6.5	1	27.1	43.4	45	60	40	141	45	45	60	42	144
												11125	10.5	1	43.8	64.3	70	70	59	141	65.9	70	70	61	144
	208-3-60	15.9	110	25				2.3	8.4	1.1		None	-	-	-	30.6	35	45	31	117	31.7	35	45	32	119
												10625	4.9	1	13.6	30.6	35	45	31	117	31.7	35	45	32	119
												11125	7.9	1	21.9	37.9	40	45	35	117	39.3	40	45	36	119
												11625	12	1	33.3	52.1	60	60	48	117	53.5	60	60	49	119
	230-3-60	15.9	110	25				2.3	7.6	1		None	-	-	-	29.8	30	45	30	117	30.8	35	45	31	119
												10625	6.5	1	15.6	29.8	30	45	30	117	30.8	35	45	31	119
												11125	10.5	1	25.3	41.1	45	45	38	117	42.4	45	45	39	119
												11625	16	1	38.5	57.6	60	60	53	117	58.9	60	60	54	119
	460-3-60	7.1	52	11				1.3	4	0.5		None	-	-	-	14.2	15	20	14	57	14.7	15	20	15	58
												11146	6	1	7.2	14.2	15	20	13	57	14.7	15	20	13	58
												11146	11.5	1	13.8	22.3	25	25	20	57	22.9	25	25	21	58
												11446	14	1	16.8	26	30	30	24	57	26.6	30	30	24	58
	575-3-60	5.1	39.5	8				1.1	7.6	0.4		None	-	-	-	10.5	15	15	11	43	10.9	15	15	11	44
												11458	13.8	1	13.3	20.4	25	25	19	43	20.9	25	25	19	44
												12358	23	1	22.1	31.4	35	35	29	43	31.9	35	35	29	44
07 (6)	208-3-60	19	123	30				2.3	5.2	1.1		None	-	-	-	33.6	35	50	33	165	35.8	40	50	36	175
												10725	4.9	1	13.6	33.6	35	50	33	165	35.8	40	50	36	175
												11725	12	1	33.3	48.1	50	50	44	165	50.9	60	60	47	175
												12525	18.6	1	51.6	71	80	80	65	165	73.8	80	80	68	175
	230-3-60	19	123	30				2.3	5.2	1		None	-	-	-	33.6	35	50	33	168	35.6	40	50	35	163
												10725	6.5	1	15.6	33.6	35	50	33	168	35.6	40	50	35	163
												11725	16	1	38.5	54.6	60	60	50	168	57.1	60	60	53	163
												12525	24.8	1	59.7	81.1	90	90	75	168	83.6	90	90	77	163
	460-3-60	9.7	62	15				1.3	2.6	0.5		None	-	-	-	17.3	20	25	17	86	18.3	20	25	18	83
												10746	6	1	7.2	17.3	20	25	11	86	18.3	20	25	12	83
												11746	16.5	1	19.8	28	30	30	26	86	29.3	30	30	27	83
												12646	25.5	1	30.7	41.6	45	45	38	86	42.9	45	45	39	83
	575-3-60	7.4	50	12				1.1	2	0.4		None	-	-	-	13.5	15	20	13	69	14.3	15	20	14	67
												11758	17	1	16.4	23	25	25	21	69	24	25	25	22	67
												12658	25.7	1	24.7	33.4	35	35	31	69	34.4	35	35	32	67
A7 (6)	208-3-60	17.6	136	27				2.3	5.2	1.1		None	-	-	-	31.8	35	45	32	168	34	35	50	34	173
												10725	4.9	1	13.6	31.8	35	45	32	168	34	35	50	34	173
												11725	12	1	33.3	48.1	50	50	44	168	50.9	60	60	47	173
												12525	18.6	1	51.6	71	80	80	65	168	73.8	80	80	68	173
	230-3-60	17.6	136	27				2.3	5.2	1		None	-	-	-	31.8	35	45	32	171	33.8	35	50	34	176
												10725	6.5	1	15.6	31.8	35	45	32	171	33.8	35	50	34	176
												11725	16	1	38.5	54.6	60	60	50	171	57.1	60	60	53	176
												12525	24.8	1	59.7	81.1	90	90	75	171	83.6	90	90	77	176
	460-3-60	8.5	66.1	13				1.3	2.6	0.5		None	-	-	-	15.8	20	20	16	84	16.8	20	20	17	87
												10746	6	1	7.2	15.8	20	20	11	84	16.8	20	20	12	87
												11746	16.5	1	19.8	28	30	30	26	84	29.3	30	30	27	87
												12646	25.5	1	30.7	41.6	45	45	38	84	42.9	45	45	39	87
	575-3-60	6.3	55.3	10				1.1	2	0.4		None	-	-	-	12.1	15	15	12	70	12.9	15	15	13	72
												11758	17	1	16.4	23	25	25	21	70	24	25	25	22	72
												12658	25.7	1	24.7	33.4	35	35	31	70	34.4	35	35	32	72

ZY04-12 Standard Static Indoor Blower - Without Powered Convenience Outlet (Continued)

Size (Tons)	Nominal Unit Voltage	Compressor 1			Compressor 2			OD Fan Motors (each)	Supply Blower Motor	Pwr Exh Motor	Pwr Conv Outlet	Electric Heat Field Installed Kit 2EK045*				MCA[1] (Amps)	Min Fuse[2]/ Breaker[3] Size (Amps)	Max Fuse[2]/ Breaker[3] Size (Amps)	Min Discon-nect Rating[4]		MCA[1] w/Pwr Exh (Amps)	Min Fuse[2]/ Breaker[3] Size w/ Pwr Exh (Amps)	Max Fuse[2]/ Breaker[3] Size w/ Pwr Exh (Amps)	Min Discon-nect Rating[4]/ Pwr Exh	
		RLA	LRA	MCC	RLA	LRA	MCC					Model	kW	Stages	Amps				FLA	LRA				FLA	LRA
08 (7.5)	208-3-60	13.6	83.1	21	13.6	83.1	21	2.3	5.2	1.1		None	-	-	-	40.4	45	50	43	208	42.6	45	50	45	218
												11725	12	1	33.3	48.1	50	50	44	208	50.9	60	60	47	218
												12525	18.6	1	51.6	71	80	80	65	208	73.8	80	80	68	218
												13225	24	1	66.6	89.8	90	90	83	208	92.5	100	100	85	218
												14225	31.8	2	88.3	116.9	125	125	108	208	119.6	125	125	110	218
	230-3-60	13.6	83.1	21	13.6	83.1	21	2.3	5.2	1		None	-	-	-	40.4	45	50	43	211	42.4	45	50	45	206
												11725	16	1	38.5	54.6	60	60	50	211	57.1	60	60	53	206
												12525	24.8	1	59.7	81.1	90	90	75	211	83.6	90	90	77	206
												13225	32	1	77	102.8	110	110	95	211	105.3	110	110	97	206
												14225	42.4	2	102	134	150	150	123	211	136.5	150	150	126	206
	460-3-60	6.1	41	10	6.1	41	10	1.3	2.6	0.5		None	-	-	-	18.9	20	25	20	106	19.9	20	25	21	103
												11746	16.5	1	19.8	28	30	30	26	106	29.3	30	30	27	103
												12846	27.8	1	33.4	45	45	45	41	106	46.3	50	50	43	103
												13346	33	1	39.7	52.9	60	60	49	106	54.1	60	60	50	103
												14246	41.7	2	50.2	66	70	70	61	106	67.3	70	70	62	103
	575-3-60	4.2	33	7	4.2	33	7	1.1	2	0.4		None	-	-	-	13.7	15	15	14	85	14.5	15	15	15	83
												11758	17	1	16.4	23	25	25	21	85	24	25	25	22	83
												13458	34	1	32.7	43.4	45	45	40	85	44.4	45	45	41	83
09 (8.5)	208-3-60	13.7	83.1	21	13.7	83.1	21	2.3	5.2	1.1		None	-	-	-	40.6	45	50	43	208	42.8	45	50	45	218
												11725	12	1	33.3	48.1	50	50	44	208	50.9	60	60	47	218
												12525	18.6	1	51.6	71	80	80	65	208	73.8	80	80	68	218
												13225	24	1	66.6	89.8	90	90	83	208	92.5	100	100	85	218
												14225	31.8	2	88.3	116.9	125	125	108	208	119.6	125	125	110	218
	230-3-60	13.7	83.1	21	13.7	83.1	21	2.3	5.2	1		None	-	-	-	40.6	45	50	43	211	42.6	45	50	45	206
												11725	16	1	38.5	54.6	60	60	50	211	57.1	60	60	53	206
												12525	24.8	1	59.7	81.1	90	90	75	211	83.6	90	90	77	206
												13225	32	1	77	102.8	110	110	95	211	105.3	110	110	97	206
												14225	42.4	2	102	134	150	150	123	211	136.5	150	150	126	206
	460-3-60	6.2	41	10	6.2	41	10	1.3	2.6	0.5		None	-	-	-	19.2	20	25	20	106	20.2	25	25	21	103
												11746	16.5	1	19.8	28	30	30	26	106	29.3	30	30	27	103
												12846	27.8	1	33.4	45	45	45	41	106	46.3	50	50	43	103
												13346	33	1	39.7	52.9	60	60	49	106	54.1	60	60	50	103
												14246	41.7	2	50.2	66	70	70	61	106	67.3	70	70	62	103
	575-3-60	4.8	33	8	4.8	33	8	1.1	2	0.4		None	-	-	-	15	20	20	16	85	15.8	20	20	17	83
												11758	17	1	16.4	23	25	25	21	85	24	25	25	22	83
												13458	34	1	32.7	43.4	45	45	40	85	44.4	45	45	41	83
12 (10)	208-3-60	16	110	25	16	110	25	5.8	5.2	1.1		None	-	-	-	47	50	60	49	264	49.2	50	60	52	274
												11725	12	1	33.3	48.1	50	60	49	264	50.9	60	60	52	274
												12525	18.6	1	51.6	71	80	80	65	264	73.8	80	80	68	274
												13225	24	1	66.6	89.8	90	90	83	264	92.5	100	100	85	274
												14225	31.8	2	88.3	116.9	125	125	108	264	119.6	125	125	110	274
	230-3-60	16	110	25	16	110	25	5.2	5.2	1		None	-	-	-	46.4	50	60	49	264	48.4	50	60	51	269
												11725	16	1	38.5	54.6	60	60	50	264	57.1	60	60	53	269
												12525	24.8	1	59.7	81.1	90	90	75	264	83.6	90	90	77	269
												13225	32	1	77	102.8	110	110	95	264	105.3	110	110	97	269
												14225	42.4	2	102	134	150	150	123	264	136.5	150	150	126	269
	460-3-60	7.8	52	12	7.8	52	12	2.9	2.6	0.5		None	-	-	-	23.1	25	30	24	128	24.1	25	30	25	130
												11746	16.5	1	19.8	28	30	30	26	128	29.3	30	30	27	130
												12846	27.8	1	33.4	45	45	45	41	128	46.3	50	50	43	130
												13346	33	1	39.7	52.9	60	60	49	128	54.1	60	60	50	130
												14246	41.7	2	50.2	66	70	70	61	128	67.3	70	70	62	130
	575-3-60	5.7	38.9	9	5.7	38.9	9	2.2	2	0.4		None	-	-	-	17	20	20	18	99	17.8	20	20	19	101
												11758	17	1	16.4	23	25	25	21	99	24	25	25	22	101
												13458	34	1	32.7	43.4	45	45	40	99	44.4	45	45	41	101

ZY04-12 Standard Static Indoor Blower - Without Powered Convenience Outlet (Continued)

Size (Tons)	Nominal Unit Voltage	Compressor 1			Compressor 2			OD Fan Motors (each)	Supply Blower Motor	Pwr Exh Motor	Pwr Conv Outlet	Electric Heat Field Installed Kit 2EK045*				MCA[1] (Amps)	Min Fuse[2]/ Breaker[3] Size (Amps)	Max Fuse[2]/ Breaker[3] Size (Amps)	Min Discon-nect Rating[4]		MCA[1] w/Pwr Exh (Amps)	Min Fuse[2]/ Breaker[3] Size w/ Pwr Exh (Amps)	Max Fuse[2]/ Breaker[3] Size w/ Pwr Exh (Amps)	Min Discon-nect Rating[4]/ Pwr Exh	
		RLA	LRA	MCC	RLA	LRA	MCC					Model	kW	Stages	Amps				FLA	LRA				FLA	LRA
With VFD																									
A7 (6)	208-3-60	17.6	136	27				2.3	7	1.1		None	-	-	-	33.6	35	50	34	206	35.8	40	50	36	211
												10725	4.9	1	13.6	33.6	35	50	34	206	35.8	40	50	36	211
												11725	12	1	33.3	50.4	60	60	46	206	53.1	60	60	49	211
												12525	18.6	1	51.6	73.3	80	80	67	206	76	80	80	70	211
	230-3-60	17.6	136	27				2.3	7.2	1		None	-	-	-	33.8	35	50	34	208	35.8	40	50	36	212
												10725	6.5	1	15.6	33.8	35	50	34	208	35.8	40	50	36	212
												11725	16	1	38.5	57.1	60	60	53	208	59.6	60	60	55	212
												12525	24.8	1	59.7	83.6	90	90	77	208	86.1	90	90	79	212
	460-3-60	8.5	66.1	13				1.3	3.6	0.5		None	-	-	-	16.8	20	25	17	103	17.8	20	25	18	105
												10746	6	1	7.2	16.8	20	25	12	103	17.8	20	25	14	105
												11746	16.5	1	19.8	29.3	30	30	27	103	30.5	35	35	28	105
												12646	25.5	1	30.7	42.9	45	45	39	103	44.1	45	45	41	105
	575-3-60	6.3	55.3	10				1.1	2.5	0.4		None	-	-	-	12.6	15	15	13	78	13.4	15	15	14	80
												11758	17	1	16.4	23.6	25	25	22	78	24.6	25	25	23	80
												12658	25.7	1	24.7	34	35	35	31	78	35	35	35	32	80
08 (7.5)	208-3-60	13.6	83.1	21	13.6	83.1	21	2.3	7	1.1		None	-	-	-	42.2	45	50	45	246	44.4	45	50	47	256
												11725	12	1	33.3	50.4	60	60	46	246	53.1	60	60	49	256
												12525	18.6	1	51.6	73.3	80	80	67	246	76	80	80	70	256
												13225	24	1	66.6	92	100	100	85	246	94.8	100	100	87	256
												14225	31.8	2	88.3	119.1	125	125	110	246	121.9	125	125	112	256
	230-3-60	13.6	83.1	21	13.6	83.1	21	2.3	7.2	1		None	-	-	-	42.4	45	50	45	248	44.4	45	50	47	243
												11725	16	1	38.5	57.1	60	60	53	248	59.6	60	60	55	243
												12525	24.8	1	59.7	83.6	90	90	77	248	86.1	90	90	79	243
												13225	32	1	77	105.3	110	110	97	248	107.8	110	110	99	243
												14225	42.4	2	102	136.5	150	150	126	248	139	150	150	128	243
	460-3-60	6.1	41	10	6.1	41	10	1.3	3.6	0.5		None	-	-	-	19.9	20	25	21	125	20.9	25	25	22	121
												11746	16.5	1	19.8	29.3	30	30	27	125	30.5	35	35	28	121
												12846	27.8	1	33.4	46.3	50	50	43	125	47.5	50	50	44	121
												13346	33	1	39.7	54.1	60	60	50	125	55.4	60	60	51	121
												14246	41.7	2	50.2	67.3	70	70	62	125	68.5	70	70	63	121
	575-3-60	4.2	33	7	4.2	33	7	1.1	2.5	0.4		None	-	-	-	14.2	15	15	15	93	15	15	15	16	90
												11758	17	1	16.4	23.6	25	25	22	93	24.6	25	25	23	90
												13458	34	1	32.7	44	45	45	40	93	45	45	45	41	90
09 (8.5)	208-3-60	13.7	83.1	21	13.7	83.1	21	2.3	7	1.1		None	-	-	-	42.4	45	50	45	246	44.6	45	50	47	256
												11725	12	1	33.3	50.4	60	60	46	246	53.1	60	60	49	256
												12525	18.6	1	51.6	73.3	80	80	67	246	76	80	80	70	256
												13225	24	1	66.6	92	100	100	85	246	94.8	100	100	87	256
												14225	31.8	2	88.3	119.1	125	125	110	246	121.9	125	125	112	256
	230-3-60	13.7	83.1	21	13.7	83.1	21	2.3	7.2	1		None	-	-	-	42.6	45	50	45	248	44.6	45	50	47	243
												11725	16	1	38.5	57.1	60	60	53	248	59.6	60	60	55	243
												12525	24.8	1	59.7	83.6	90	90	77	248	86.1	90	90	79	243
												13225	32	1	77	105.3	110	110	97	248	107.8	110	110	99	243
												14225	42.4	2	102	136.5	150	150	126	248	139	150	150	128	243
	460-3-60	6.2	41	10	6.2	41	10	1.3	3.6	0.5		None	-	-	-	20.2	25	25	21	125	21.2	25	25	23	121
												11746	16.5	1	19.8	29.3	30	30	27	125	30.5	35	35	28	121
												12846	27.8	1	33.4	46.3	50	50	43	125	47.5	50	50	44	121
												13346	33	1	39.7	54.1	60	60	50	125	55.4	60	60	51	121
												14246	41.7	2	50.2	67.3	70	70	62	125	68.5	70	70	63	121
	575-3-60	4.8	33	8	4.8	33	8	1.1	2.5	0.4		None	-	-	-	15.5	20	20	16	93	16.3	20	20	17	90
												11758	17	1	16.4	23.6	25	25	22	93	24.6	25	25	23	90
												13458	34	1	32.7	44	45	45	40	93	45	45	45	41	90

ZY04-12 Standard Static Indoor Blower - Without Powered Convenience Outlet (Continued)

Size (Tons)	Nominal Unit Voltage	Compressor 1			Compressor 2			OD Fan Motors (each)	Supply Blower Motor	Pwr Exh Motor	Pwr Conv Outlet	Electric Heat Field Installed Kit 2EK045*				MCA[1] (Amps)	Min Fuse[2]/ Breaker[3] Size (Amps)	Max Fuse[2]/ Breaker[3] Size (Amps)	Min Discon-nect Rating[4]		MCA[1] w/Pwr Exh (Amps)	Min Fuse[2]/ Breaker[3] Size w/ Pwr Exh (Amps)	Max Fuse[2]/ Breaker[3] Size w/ Pwr Exh (Amps)	Min Discon-nect Rating[4]/ Pwr Exh	
		RLA	LRA	MCC	RLA	LRA	MCC					Model	kW	Stages	Amps				FLA	LRA				FLA	LRA
12 (10)	208-3-60	16	110	25	16	110	25	5.8	7	1.1		None	-	-	-	48.8	50	60	52	302	51	60	60	54	312
												11725	12	1	33.3	50.4	60	60	52	302	53.1	60	60	54	312
												12525	18.6	1	51.6	73.3	80	80	67	302	76	80	80	70	312
												13225	24	1	66.6	92	100	100	85	302	94.8	100	100	87	312
												14225	31.8	2	88.3	119.1	125	125	110	302	121.9	125	125	112	312
	230-3-60	16	110	25	16	110	25	5.2	7.2	1		None	-	-	-	48.4	50	60	51	301	50.4	60	60	53	305
												11725	16	1	38.5	57.1	60	60	53	301	59.6	60	60	55	305
												12525	24.8	1	59.7	83.6	90	90	77	301	86.1	90	90	79	305
												13225	32	1	77	105.3	110	110	97	301	107.8	110	110	99	305
												14225	42.4	2	102	136.5	150	150	126	301	139	150	150	128	305
	460-3-60	7.8	52	12	7.8	52	12	2.9	3.6	0.5		None	-	-	-	24.1	25	30	25	146	25.1	30	30	27	148
												11746	16.5	1	19.8	29.3	30	30	27	146	30.5	35	35	28	148
												12846	27.8	1	33.4	46.3	50	50	43	146	47.5	50	50	44	148
												13346	33	1	39.7	54.1	60	60	50	146	55.4	60	60	51	148
												14246	41.7	2	50.2	67.3	70	70	62	146	68.5	70	70	63	148
	575-3-60	5.7	38.9	9	5.7	38.9	9	2.2	2.5	0.4		None	-	-	-	17.5	20	20	19	107	18.3	20	20	19	109
												11758	17	1	16.4	23.6	25	25	22	107	24.6	25	25	23	109
												13458	34	1	32.7	44	45	45	40	107	45	45	45	41	109

1. Minimum Circuit Ampacity.
2. Dual Element, Time Delay Type.
3. HACR type per NEC.
4. Non-fused Disconnect, Verify on the unit nameplate that the disconnect is properly sized for the application. Units with field installed electric heat kits may exceed the factory installed disconnect amperage rating.

ZY04-12 Standard Static Indoor Blower - With Powered Convenience Outlet

Size (Tons)	Nominal Unit Voltage	Compressor 1			Compressor 2			OD Fan Motors (each)	Supply Blower Motor	Pwr Exh Motor	Pwr Conv Outlet	Electric Heat Field Installed Kit 2EK045*				MCA[1] (Amps)	Min Fuse[2]/ Breaker[3] Size (Amps)	Max Fuse[2]/ Breaker[3] Size (Amps)	Min Discon-nect Rating[4]		MCA[1] w/Pwr Exh (Amps)	Min Fuse[2]/ Breaker[3] Size w/ Pwr Exh (Amps)	Max Fuse[2]/ Breaker[3] Size w/ Pwr Exh (Amps)	Min Discon-nect Rating[4]/ Pwr Exh	
		RLA	LRA	MCC	RLA	LRA	MCC					Model	kW	Stages	Amps				FLA	LRA				FLA	LRA
04 (3)	208-1-60	16.7	79	26				1.4	6.6	1.5	8.6	None	-	-	-	33.2	35	45	33	89	34.7	35	50	35	92
												10625	4.9	1	23.6	43.1	45	45	40	89	45	45	50	41	92
												11125	7.9	1	38	61.1	70	70	56	89	63	70	70	58	92
	230-1-60	16.7	79	26				1.4	6	1.3	8.6	None	-	-	-	32.6	35	45	33	89	33.9	35	50	34	92
												10625	6.5	1	27.1	46.8	50	50	43	89	48.4	50	50	45	92
												11125	10.5	1	43.8	67.6	70	70	62	89	69.3	70	70	64	92
	208-3-60	10.4	73	16				1.4	6.6	1.1	8.6	None	-	-	-	25.3	30	35	26	83	26.4	30	35	27	85
												10625	4.9	1	13.6	30.6	35	35	28	83	32	35	35	29	85
												11125	7.9	1	21.9	41	45	45	38	83	42.4	45	45	39	85
												11625	12	1	33.3	55.3	60	60	51	83	56.6	60	60	52	85
	230-3-60	10.4	73	16				1.4	6	1	8.6	None	-	-	-	24.7	25	35	25	83	25.7	30	35	27	85
												10625	6.5	1	15.6	32.4	35	35	30	83	33.6	35	35	31	85
												11125	10.5	1	25.3	44.5	45	45	41	83	45.8	50	50	42	85
												11625	16	1	38.5	61	70	70	56	83	62.3	70	70	57	85
	460-3-60	5.8	38	9				0.8	3.2	0.5	8.6	None	-	-	-	13.5	15	15	14	44	14	15	15	14	45
												10646	6	1	7.2	15.7	20	20	14	44	16.3	20	20	15	45
												11146	11.5	1	13.8	23.9	25	25	22	44	24.6	25	25	23	45
												11446	14	1	16.8	27.7	30	30	25	44	28.3	30	30	26	45
	575-3-60	3.8	36.5	6				0.6	6	0.4	8.6	None	-	-	-	9.5	15	15	10	41	9.9	15	15	10	41
												11058	9.2	1	8.9	16.3	20	20	15	41	16.8	20	20	15	41
												11458	13.8	1	13.3	21.8	25	25	20	41	22.3	25	25	20	41
05 (4)	208-1-60	21.8	117	34				1.4	8.4	1.5	8.6	None	-	-	-	41.4	45	60	41	127	42.9	45	60	43	130
												10625	4.9	1	23.6	45.4	50	60	42	127	47.3	50	60	43	130
												11125	7.9	1	38	63.4	70	70	58	127	65.3	70	70	60	130
	230-1-60	21.8	117	34				1.4	7.6	1.3	8.6	None	-	-	-	40.6	45	60	40	127	41.9	45	60	42	130
												10625	6.5	1	27.1	48.8	50	60	45	127	50.4	60	60	46	130
												11125	10.5	1	43.8	69.6	70	70	64	127	71.3	80	80	66	130
	208-3-60	13.7	83.1	21				1.4	8.4	1.1	8.6	None	-	-	-	31.2	35	40	32	93	32.3	35	45	33	95
												10625	4.9	1	13.6	32.9	35	40	32	93	34.3	35	45	33	95
												11125	7.9	1	21.9	43.3	45	45	40	93	44.6	45	45	41	95
												11625	12	1	33.3	57.5	60	60	53	93	58.9	60	60	54	95
	230-3-60	13.7	83.1	21				1.4	7.6	1	8.6	None	-	-	-	30.4	35	40	31	93	31.4	35	45	32	95
												10625	6.5	1	15.6	34.4	35	40	32	93	35.6	40	45	33	95
												11125	10.5	1	25.3	46.5	50	50	43	93	47.8	50	50	44	95
												11625	16	1	38.5	63	70	70	58	93	64.3	70	70	59	95
	460-3-60	6.2	41	10				0.8	4	0.5	8.6	None	-	-	-	14.8	15	20	15	47	15.3	20	20	16	48
												10646	6	1	7.2	16.7	20	20	15	47	17.3	20	20	16	48
												11146	11.5	1	13.8	24.9	25	25	23	47	25.6	30	30	24	48
												11446	14	1	16.8	28.7	30	30	26	47	29.3	30	30	27	48
	575-3-60	4.8	33	8				0.6	7.6	0.4	8.6	None	-	-	-	11.4	15	15	12	37	11.8	15	15	12	38
												11058	9.2	1	8.9	17.1	20	20	16	37	17.6	20	20	16	38
												11458	13.8	1	13.3	22.6	25	25	21	37	23.1	25	25	21	38

ZY04-12 Standard Static Indoor Blower - With Powered Convenience Outlet (Continued)

Size (Tons)	Nominal Unit Voltage	Compressor 1			Compressor 2			OD Fan Motors (each)	Supply Blower Motor	Pwr Exh Motor	Pwr Conv Outlet	Electric Heat Field Installed Kit 2EK045*				MCA[1] (Amps)	Min Fuse[2]/ Breaker[3] Size (Amps)	Max Fuse[2]/ Breaker[3] Size (Amps)	Min Discon-nect Rating[4]		MCA[1] w/Pwr Exh (Amps)	Min Fuse[2]/ Breaker[3] Size w/ Pwr Exh (Amps)	Max Fuse[2]/ Breaker[3] Size w/ Pwr Exh (Amps)	Min Discon-nect Rating[4]/ Pwr Exh	
		RLA	LRA	MCC	RLA	LRA	MCC					Model	kW	Stages	Amps				FLA	LRA				FLA	LRA
06 (5)	208-1-60	25	134	39				2.3	8.4	1.5	8.6	None	-	-	-	46.3	50	70	46	145	47.8	50	70	48	149
												10625	4.9	1	23.6	46.3	50	70	46	145	47.8	50	70	48	149
												11125	7.9	1	38	63.4	70	70	58	145	65.3	70	70	60	149
	230-1-60	25	134	39				2.3	7.6	1.3	8.6	None	-	-	-	45.5	50	70	45	145	46.8	50	70	47	148
												10625	6.5	1	27.1	48.8	50	70	45	145	50.4	60	70	47	148
												11125	10.5	1	43.8	69.6	70	70	64	145	71.3	80	80	66	148
	208-3-60	15.9	110	25				2.3	8.4	1.1	8.6	None	-	-	-	34.9	35	50	36	121	36	40	50	37	124
												10625	4.9	1	13.6	34.9	35	50	36	121	36	40	50	37	124
												11125	7.9	1	21.9	43.3	45	50	40	121	44.6	45	50	41	124
												11625	12	1	33.3	57.5	60	60	53	121	58.9	60	60	54	124
	230-3-60	15.9	110	25				2.3	7.6	1	8.6	None	-	-	-	34.1	35	45	35	121	35.1	40	50	36	124
												10625	6.5	1	15.6	34.4	35	45	35	121	35.6	40	50	36	124
												11125	10.5	1	25.3	46.5	50	50	43	121	47.8	50	50	44	124
												11625	16	1	38.5	63	70	70	58	121	64.3	70	70	59	124
	460-3-60	7.1	52	11				1.3	4	0.5	8.6	None	-	-	-	16.4	20	20	17	59	16.9	20	20	17	60
												11146	6	1	7.2	16.7	20	20	15	59	17.3	20	20	16	60
												11146	11.5	1	13.8	24.9	25	25	23	59	25.6	30	30	24	60
												11446	14	1	16.8	28.7	30	30	26	59	29.3	30	30	27	60
	575-3-60	5.1	39.5	8				1.1	7.6	0.4	8.6	None	-	-	-	12.3	15	15	13	44	12.7	15	15	13	45
												11458	13.8	1	13.3	22.6	25	25	21	44	23.1	25	25	21	45
												12358	23	1	22.1	33.6	35	35	31	44	34.1	35	35	31	45
07 (6)	208-3-60	19	123	30				2.3	5.2	1.1	8.6	None	-	-	-	37.9	40	50	38	169	40.1	45	50	41	179
												10725	4.9	1	13.6	37.9	40	50	38	169	40.1	45	50	41	179
												11725	12	1	33.3	53.5	60	60	49	169	56.3	60	60	52	179
												12525	18.6	1	51.6	76.4	80	80	70	169	79.1	80	80	73	179
	230-3-60	19	123	30				2.3	5.2	1	8.6	None	-	-	-	37.9	40	50	38	172	39.9	40	50	40	167
												10725	6.5	1	15.6	37.9	40	50	38	172	39.9	40	50	40	167
												11725	16	1	38.5	60	60	60	55	172	62.5	70	70	58	167
												12525	24.8	1	59.7	86.5	90	90	80	172	89	90	90	82	167
	460-3-60	9.7	62	15				1.3	2.6	0.5	8.6	None	-	-	-	19.5	20	25	20	88	20.5	25	25	21	85
												10746	6	1	7.2	19.5	20	25	14	88	20.5	25	25	15	85
												11746	16.5	1	19.8	30.7	35	35	28	88	31.9	35	35	29	85
												12646	25.5	1	30.7	44.3	45	45	41	88	45.6	50	50	42	85
	575-3-60	7.4	50	12				1.1	2	0.4	8.6	None	-	-	-	15.2	20	20	15	71	16	20	20	16	68
												11758	17	1	16.4	25.2	30	30	23	71	26.2	30	30	24	68
												12658	25.7	1	24.7	35.5	40	40	33	71	36.5	40	40	34	68
A7 (6)	208-3-60	17.6	136	27				2.3	5.2	1.1	8.6	None	-	-	-	36.1	40	50	36	172	38.3	40	50	39	177
												10725	4.9	1	13.6	36.1	40	50	36	172	38.3	40	50	39	177
												11725	12	1	33.3	53.5	60	60	49	172	56.3	60	60	52	177
												12525	18.6	1	51.6	76.4	80	80	70	172	79.1	80	80	73	177
	230-3-60	17.6	136	27				2.3	5.2	1	8.6	None	-	-	-	36.1	40	50	36	175	38.1	40	50	39	180
												10725	6.5	1	15.6	36.1	40	50	36	175	38.1	40	50	39	180
												11725	16	1	38.5	60	60	60	55	175	62.5	70	70	58	180
												12525	24.8	1	59.7	86.5	90	90	80	175	89	90	90	82	180
	460-3-60	8.5	66.1	13				1.3	2.6	0.5	8.6	None	-	-	-	18	20	25	18	87	19	20	25	19	89
												10746	6	1	7.2	18	20	25	14	87	19	20	25	15	89
												11746	16.5	1	19.8	30.7	35	35	28	87	31.9	35	35	29	89
												12646	25.5	1	30.7	44.3	45	45	41	87	45.6	50	50	42	89
	575-3-60	6.3	55.3	10				1.1	2	0.4	8.6	None	-	-	-	13.8	15	20	14	72	14.6	15	20	15	74
												11758	17	1	16.4	25.2	30	30	23	72	26.2	30	30	24	74
												12658	25.7	1	24.7	35.5	40	40	33	72	36.5	40	40	34	74

ZY04-12 Standard Static Indoor Blower - With Powered Convenience Outlet (Continued)

Size (Tons)	Nominal Unit Voltage	Compressor 1			Compressor 2			OD Fan Motors (each)	Supply Blower Motor	Pwr Exh Motor	Pwr Conv Outlet	Electric Heat Field Installed Kit 2EK045*				MCA[1] (Amps)	Min Fuse[2]/ Breaker[3] Size (Amps)	Max Fuse[2]/ Breaker[3] Size (Amps)	Min Discon-nect Rating[4]		MCA[1] w/Pwr Exh (Amps)	Min Fuse[2]/ Breaker[3] Size w/ Pwr Exh (Amps)	Max Fuse[2]/ Breaker[3] Size w/ Pwr Exh (Amps)	Min Discon-nect Rating[4]/ Pwr Exh	
		RLA	LRA	MCC	RLA	LRA	MCC					Model	kW	Stages	Amps				FLA	LRA				FLA	LRA
08 (7.5)	208-3-60	13.6	83.1	21	13.6	83.1	21	2.3	5.2	1.1	8.6	None	-	-	-	44.7	45	50	47	212	46.9	50	50	50	222
												11725	12	1	33.3	53.5	60	60	49	212	56.3	60	60	52	222
												12525	18.6	1	51.6	76.4	80	80	70	212	79.1	80	80	73	222
												13225	24	1	66.6	95.1	100	100	88	212	97.9	100	100	90	222
												14225	31.8	2	88.3	122.3	125	125	112	212	125	150	150	115	222
	230-3-60	13.6	83.1	21	13.6	83.1	21	2.3	5.2	1	8.6	None	-	-	-	44.7	45	50	47	216	46.7	50	60	50	210
												11725	16	1	38.5	60	60	60	55	216	62.5	70	70	58	210
												12525	24.8	1	59.7	86.5	90	90	80	216	89	90	90	82	210
												13225	32	1	77	108.1	110	110	99	216	110.6	125	125	102	210
												14225	42.4	2	102	139.4	150	150	128	216	141.9	150	150	131	210
	460-3-60	6.1	41	10	6.1	41	10	1.3	2.6	0.5	8.6	None	-	-	-	21.1	25	25	23	108	22.1	25	25	24	105
												11746	16.5	1	19.8	30.7	35	35	28	108	31.9	35	35	29	105
												12846	27.8	1	33.4	47.7	50	50	44	108	48.9	50	50	45	105
												13346	33	1	39.7	55.6	60	60	51	108	56.8	60	60	52	105
												14246	41.7	2	50.2	68.7	70	70	63	108	69.9	70	70	64	105
	575-3-60	4.2	33	7	4.2	33	7	1.1	2	0.4	8.6	None	-	-	-	15.4	20	20	16	87	16.2	20	20	17	84
												11758	17	1	16.4	25.2	30	30	23	87	26.2	30	30	24	84
												13458	34	1	32.7	45.5	50	50	42	87	46.5	50	50	43	84
09 (8.5)	208-3-60	13.7	83.1	21	13.7	83.1	21	2.3	5.2	1.1	8.6	None	-	-	-	44.9	45	50	48	212	47.1	50	50	50	222
												11725	12	1	33.3	53.5	60	60	49	212	56.3	60	60	52	222
												12525	18.6	1	51.6	76.4	80	80	70	212	79.1	80	80	73	222
												13225	24	1	66.6	95.1	100	100	88	212	97.9	100	100	90	222
												14225	31.8	2	88.3	122.3	125	125	112	212	125	150	150	115	222
	230-3-60	13.7	83.1	21	13.7	83.1	21	2.3	5.2	1	8.6	None	-	-	-	44.9	45	50	48	216	46.9	50	60	50	210
												11725	16	1	38.5	60	60	60	55	216	62.5	70	70	58	210
												12525	24.8	1	59.7	86.5	90	90	80	216	89	90	90	82	210
												13225	32	1	77	108.1	110	110	99	216	110.6	125	125	102	210
												14225	42.4	2	102	139.4	150	150	128	216	141.9	150	150	131	210
	460-3-60	6.2	41	10	6.2	41	10	1.3	2.6	0.5	8.6	None	-	-	-	21.4	25	25	23	108	22.4	25	25	24	105
												11746	16.5	1	19.8	30.7	35	35	28	108	31.9	35	35	29	105
												12846	27.8	1	33.4	47.7	50	50	44	108	48.9	50	50	45	105
												13346	33	1	39.7	55.6	60	60	51	108	56.8	60	60	52	105
												14246	41.7	2	50.2	68.7	70	70	63	108	69.9	70	70	64	105
	575-3-60	4.8	33	8	4.8	33	8	1.1	2	0.4	8.6	None	-	-	-	16.7	20	20	18	87	17.5	20	20	19	84
												11758	17	1	16.4	25.2	30	30	23	87	26.2	30	30	24	84
												13458	34	1	32.7	45.5	50	50	42	87	46.5	50	50	43	84
12 (10)	208-3-60	16	110	25	16	110	25	5.8	5.2	1.1	8.6	None	-	-	-	51.3	60	60	54	269	53.5	60	60	57	279
												11725	12	1	33.3	53.5	60	60	54	269	56.3	60	60	57	279
												12525	18.6	1	51.6	76.4	80	80	70	269	79.1	80	80	73	279
												13225	24	1	66.6	95.1	100	100	88	269	97.9	100	100	90	279
												14225	31.8	2	88.3	122.3	125	125	112	269	125	150	150	115	279
	230-3-60	16	110	25	16	110	25	5.2	5.2	1	8.6	None	-	-	-	50.7	60	60	54	268	52.7	60	60	56	273
												11725	16	1	38.5	60	60	60	55	268	62.5	70	70	58	273
												12525	24.8	1	59.7	86.5	90	90	80	268	89	90	90	82	273
												13225	32	1	77	108.1	110	110	99	268	110.6	125	125	102	273
												14225	42.4	2	102	139.4	150	150	128	268	141.9	150	150	131	273
	460-3-60	7.8	52	12	7.8	52	12	2.9	2.6	0.5	8.6	None	-	-	-	25.3	30	30	27	130	26.3	30	30	28	132
												11746	16.5	1	19.8	30.7	35	35	28	130	31.9	35	35	29	132
												12846	27.8	1	33.4	47.7	50	50	44	130	48.9	50	50	45	132
												13346	33	1	39.7	55.6	60	60	51	130	56.8	60	60	52	132
												14246	41.7	2	50.2	68.7	70	70	63	130	69.9	70	70	64	132
	575-3-60	5.7	38.9	9	5.7	38.9	9	2.2	2	0.4	8.6	None	-	-	-	18.7	20	20	20	101	19.5	20	20	21	103
												11758	17	1	16.4	25.2	30	30	23	101	26.2	30	30	24	103
												13458	34	1	32.7	45.5	50	50	42	101	46.5	50	50	43	103

ZY04-12 Standard Static Indoor Blower - With Powered Convenience Outlet (Continued)

Size (Tons)	Nominal Unit Voltage	Compressor 1			Compressor 2			OD Fan Motors (each)	Supply Blower Motor	Pwr Exh Motor	Pwr Conv Outlet	Electric Heat Field Installed Kit 2EK045*				MCA[1] (Amps)	Min Fuse[2]/ Breaker[3] Size (Amps)	Max Fuse[2]/ Breaker[3] Size (Amps)	Min Discon-nect Rating[4]		MCA[1] w/Pwr Exh (Amps)	Min Fuse[2]/ Breaker[3] Size w/ Pwr Exh (Amps)	Max Fuse[2]/ Breaker[3] Size w/ Pwr Exh (Amps)	Min Discon-nect Rating[4]/ Pwr Exh	
		RLA	LRA	MCC	RLA	LRA	MCC					Model	kW	Stages	Amps				FLA	LRA				FLA	LRA
With VFD																									
A7 (6)	208-3-60	17.6	136	27				2.3	7	1.1	8.6	None	-	-	-	37.9	40	50	39	210	40.1	45	50	41	215
												10725	4.9	1	13.6	37.9	40	50	39	210	40.1	45	50	41	215
												11725	12	1	33.3	55.8	60	60	51	210	58.5	60	60	54	215
												12525	18.6	1	51.6	78.6	80	80	72	210	81.4	90	90	75	215
	230-3-60	17.6	136	27				2.3	7.2	1	8.6	None	-	-	-	38.1	40	50	39	212	40.1	45	50	41	217
												10725	6.5	1	15.6	38.1	40	50	39	212	40.1	45	50	41	217
												11725	16	1	38.5	62.5	70	70	58	212	65	70	70	60	217
												12525	24.8	1	59.7	89	90	90	82	212	91.5	100	100	84	217
	460-3-60	8.5	66.1	13				1.3	3.6	0.5	8.6	None	-	-	-	19	20	25	19	105	20	20	25	21	107
												10746	6	1	7.2	19	20	25	15	105	20	20	25	16	107
												11746	16.5	1	19.8	31.9	35	35	29	105	33.2	35	35	31	107
												12646	25.5	1	30.7	45.6	50	50	42	105	46.8	50	50	43	107
	575-3-60	6.3	55.3	10				1.1	2.5	0.4	8.6	None	-	-	-	14.3	15	20	15	79	15.1	20	20	16	81
												11758	17	1	16.4	25.8	30	30	24	79	26.8	30	30	25	81
												12658	25.7	1	24.7	36.2	40	40	33	79	37.2	40	40	34	81
08 (7.5)	208-3-60	13.6	83.1	21	13.6	83.1	21	2.3	7	1.1	8.6	None	-	-	-	46.5	50	60	50	250	48.7	50	60	52	260
												11725	12	1	33.3	55.8	60	60	51	250	58.5	60	60	54	260
												12525	18.6	1	51.6	78.6	80	80	72	250	81.4	90	90	75	260
												13225	24	1	66.6	97.4	100	100	90	250	100.1	110	110	92	260
												14225	31.8	2	88.3	124.5	125	125	115	250	127.3	150	150	117	260
	230-3-60	13.6	83.1	21	13.6	83.1	21	2.3	7.2	1	8.6	None	-	-	-	46.7	50	60	50	252	48.7	50	60	52	247
												11725	16	1	38.5	62.5	70	70	58	252	65	70	70	60	247
												12525	24.8	1	59.7	89	90	90	82	252	91.5	100	100	84	247
												13225	32	1	77	110.6	125	125	102	252	113.1	125	125	104	247
												14225	42.4	2	102	141.9	150	150	131	252	144.4	150	150	133	247
	460-3-60	6.1	41	10	6.1	41	10	1.3	3.6	0.5	8.6	None	-	-	-	22.1	25	25	24	127	23.1	25	25	25	123
												11746	16.5	1	19.8	31.9	35	35	29	127	33.2	35	35	31	123
												12846	27.8	1	33.4	48.9	50	50	45	127	50.2	60	60	46	123
												13346	33	1	39.7	56.8	60	60	52	127	58.1	60	60	53	123
												14246	41.7	2	50.2	69.9	70	70	64	127	71.2	80	80	65	123
	575-3-60	4.2	33	7	4.2	33	7	1.1	2.5	0.4	8.6	None	-	-	-	15.9	20	20	17	95	16.7	20	20	18	92
												11758	17	1	16.4	25.8	30	30	24	95	26.8	30	30	25	92
												13458	34	1	32.7	46.2	50	50	42	95	47.2	50	50	43	92
09 (8.5)	208-3-60	13.7	83.1	21	13.7	83.1	21	2.3	7	1.1	8.6	None	-	-	-	46.7	50	60	50	250	48.9	50	60	52	260
												11725	12	1	33.3	55.8	60	60	51	250	58.5	60	60	54	260
												12525	18.6	1	51.6	78.6	80	80	72	250	81.4	90	90	75	260
												13225	24	1	66.6	97.4	100	100	90	250	100.1	110	110	92	260
												14225	31.8	2	88.3	124.5	125	125	115	250	127.3	150	150	117	260
	230-3-60	13.7	83.1	21	13.7	83.1	21	2.3	7.2	1	8.6	None	-	-	-	46.9	50	60	50	252	48.9	50	60	52	247
												11725	16	1	38.5	62.5	70	70	58	252	65	70	70	60	247
												12525	24.8	1	59.7	89	90	90	82	252	91.5	100	100	84	247
												13225	32	1	77	110.6	125	125	102	252	113.1	125	125	104	247
												14225	42.4	2	102	141.9	150	150	131	252	144.4	150	150	133	247
	460-3-60	6.2	41	10	6.2	41	10	1.3	3.6	0.5	8.6	None	-	-	-	22.4	25	25	24	127	23.4	25	25	25	123
												11746	16.5	1	19.8	31.9	35	35	29	127	33.2	35	35	31	123
												12846	27.8	1	33.4	48.9	50	50	45	127	50.2	60	60	46	123
												13346	33	1	39.7	56.8	60	60	52	127	58.1	60	60	53	123
												14246	41.7	2	50.2	69.9	70	70	64	127	71.2	80	80	65	123
	575-3-60	4.8	33	8	4.8	33	8	1.1	2.5	0.4	8.6	None	-	-	-	17.2	20	20	18	95	18	20	20	19	92
												11758	17	1	16.4	25.8	30	30	24	95	26.8	30	30	25	92
												13458	34	1	32.7	46.2	50	50	42	95	47.2	50	50	43	92

ZY04-12 Standard Static Indoor Blower - With Powered Convenience Outlet (Continued)

Size (Tons)	Nominal Unit Voltage	Compressor 1			Compressor 2			OD Fan Motors (each)	Supply Blower Motor	Pwr Exh Motor	Pwr Conv Outlet	Electric Heat Field Installed Kit 2EK045*				MCA[1] (Amps)	Min Fuse[2]/ Breaker[3] Size (Amps)	Max Fuse[2]/ Breaker[3] Size (Amps)	Min Discon-nect Rating[4]		MCA[1] w/Pwr Exh (Amps)	Min Fuse[2]/ Breaker[3] Size w/ Pwr Exh (Amps)	Max Fuse[2]/ Breaker[3] Size w/ Pwr Exh (Amps)	Min Discon-nect Rating[4]/ Pwr Exh	
		RLA	LRA	MCC	RLA	LRA	MCC					Model	kW	Stages	Amps				FLA	LRA				FLA	LRA
12 (10)	208-3-60	16	110	25	16	110	25	5.8	7	1.1	8.6	None	-	-	-	53.1	60	60	56	306	55.3	60	70	59	316
												11725	12	1	33.3	55.8	60	60	56	306	58.5	60	70	59	316
												12525	18.6	1	51.6	78.6	80	80	72	306	81.4	90	90	75	316
												13225	24	1	66.6	97.4	100	100	90	306	100.1	110	110	92	316
												14225	31.8	2	88.3	124.5	125	125	115	306	127.3	150	150	117	316
	230-3-60	16	110	25	16	110	25	5.2	7.2	1	8.6	None	-	-	-	52.7	60	60	56	305	54.7	60	70	58	310
												11725	16	1	38.5	62.5	70	70	58	305	65	70	70	60	310
												12525	24.8	1	59.7	89	90	90	82	305	91.5	100	100	84	310
												13225	32	1	77	110.6	125	125	102	305	113.1	125	125	104	310
												14225	42.4	2	102	141.9	150	150	131	305	144.4	150	150	133	310
	460-3-60	7.8	52	12	7.8	52	12	2.9	3.6	0.5	8.6	None	-	-	-	26.3	30	30	28	148	27.3	30	30	29	150
												11746	16.5	1	19.8	31.9	35	35	29	148	33.2	35	35	31	150
												12846	27.8	1	33.4	48.9	50	50	45	148	50.2	60	60	46	150
												13346	33	1	39.7	56.8	60	60	52	148	58.1	60	60	53	150
												14246	41.7	2	50.2	69.9	70	70	64	148	71.2	80	80	65	150
	575-3-60	5.7	38.9	9	5.7	38.9	9	2.2	2.5	0.4	8.6	None	-	-	-	19.2	20	20	20	109	20	20	20	21	110
												11758	17	1	16.4	25.8	30	30	24	109	26.8	30	30	25	110
												13458	34	1	32.7	46.2	50	50	42	109	47.2	50	50	43	110

1. Minimum Circuit Ampacity.
2. Dual Element, Time Delay Type.
3. HACR type per NEC.
4. Non-fused Disconnect, Verify on the unit nameplate that the disconnect is properly sized for the application. Units with field installed electric heat kits may exceed the factory installed disconnect amperage rating.

ZY04-12 Medium Static Indoor Blower - Without Powered Convenience Outlet

Size (Tons)	Nominal Unit Voltage	Compressor 1			Compressor 2			OD Fan Motors (each)	Supply Blower Motor	Pwr Exh Motor	Pwr Conv Outlet	Electric Heat Field Installed Kit 2EK045*				MCA[1] (Amps)	Min Fuse[2]/ Breaker[3] Size (Amps)	Max Fuse[2]/ Breaker[3] Size (Amps)	Min Discon-nect Rating[4]		MCA[1] w/Pwr Exh (Amps)	Min Fuse[2]/ Breaker[3] Size w/ Pwr Exh (Amps)	Max Fuse[2]/ Breaker[3] Size w/ Pwr Exh (Amps)	Min Discon-nect Rating[4]/ Pwr Exh	
		RLA	LRA	MCC	RLA	LRA	MCC					Model	kW	Stages	Amps				FLA	LRA				FLA	LRA
04 (3)	208-1-60	16.7	79	26				1.4	7.6	1.5		None	-	-	-	29.9	30	45	30	115	31.4	35	45	31	119
												10625	4.9	1	23.6	39	40	45	36	115	40.9	45	45	38	119
												11125	7.9	1	38	57	60	60	52	115	58.9	60	60	54	119
	230-1-60	16.7	79	26				1.4	7	1.3		None	-	-	-	29.3	30	45	29	118	30.6	35	45	30	121
												10625	6.5	1	27.1	42.6	45	45	39	118	44.3	45	45	41	121
												11125	10.5	1	43.8	63.5	70	70	58	118	65.1	70	70	60	121
	208-3-60	10.4	73	16				1.4	5.2	1.1		None	-	-	-	19.6	20	30	20	99	20.7	25	30	21	101
												10625	4.9	1	13.6	23.5	25	30	22	99	24.9	25	30	23	101
												11125	7.9	1	21.9	33.9	35	35	31	99	35.3	40	40	32	101
												11625	12	1	33.3	48.1	50	50	44	99	49.5	50	50	46	101
	230-3-60	10.4	73	16				1.4	5.2	1		None	-	-	-	19.6	20	30	20	101	20.6	25	30	21	104
												10625	6.5	1	15.6	26	30	30	24	101	27.3	30	30	25	104
												11125	10.5	1	25.3	38.1	40	40	35	101	39.4	40	40	36	104
												11625	16	1	38.5	54.6	60	60	50	101	55.9	60	60	51	104
	460-3-60	5.8	38	9				0.8	2.6	0.5		None	-	-	-	10.7	15	15	11	52	11.2	15	15	11	54
												10646	6	1	7.2	12.3	15	15	11	52	12.9	15	15	12	54
												11146	11.5	1	13.8	20.5	25	25	19	52	21.1	25	25	19	54
												11446	14	1	16.8	24.3	25	25	22	52	24.9	25	25	23	54
	575-3-60	3.8	36.5	6				0.6	2	0.4		None	-	-	-	7.4	15	15	7	48	7.8	15	15	8	49
												11058	9.2	1	8.9	13.6	15	15	13	48	14.1	15	15	13	49
												11458	13.8	1	13.3	19.1	20	20	18	48	19.6	20	20	18	49
05 (4)	208-1-60	21.8	117	34				1.4	7.6	1.5		None	-	-	-	36.3	40	50	35	153	37.8	40	50	37	157
												10625	4.9	1	23.6	39	40	50	36	153	40.9	45	50	38	157
												11125	7.9	1	38	57	60	60	52	153	58.9	60	60	54	157
	230-1-60	21.8	117	34				1.4	7	1.3		None	-	-	-	35.7	40	50	35	156	37	40	50	36	159
												10625	6.5	1	27.1	42.6	45	50	39	156	44.3	45	50	41	159
												11125	10.5	1	43.8	63.5	70	70	58	156	65.1	70	70	60	159
	208-3-60	13.7	83.1	21				1.4	5.2	1.1		None	-	-	-	23.7	25	35	23	109	24.8	25	35	25	111
												10625	4.9	1	13.6	23.7	25	35	23	109	24.9	25	35	25	111
												11125	7.9	1	21.9	33.9	35	35	31	109	35.3	40	40	32	111
												11625	12	1	33.3	48.1	50	50	44	109	49.5	50	50	46	111
	230-3-60	13.7	83.1	21				1.4	5.2	1		None	-	-	-	23.7	25	35	23	111	24.7	25	35	24	114
												10625	6.5	1	15.6	26	30	35	24	111	27.3	30	35	25	114
												11125	10.5	1	25.3	38.1	40	40	35	111	39.4	40	40	36	114
												11625	16	1	38.5	54.6	60	60	50	111	55.9	60	60	51	114
	460-3-60	6.2	41	10				0.8	2.6	0.5		None	-	-	-	11.2	15	15	11	55	11.7	15	15	12	57
												10646	6	1	7.2	12.3	15	15	11	55	12.9	15	15	12	57
												11146	11.5	1	13.8	20.5	25	25	19	55	21.1	25	25	19	57
												11446	14	1	16.8	24.3	25	25	22	55	24.9	25	25	23	57
	575-3-60	4.8	33	8				0.6	2	0.4		None	-	-	-	8.6	15	15	9	45	9	15	15	9	45
												11058	9.2	1	8.9	13.6	15	15	13	45	14.1	15	15	13	45
												11458	13.8	1	13.3	19.1	20	20	18	45	19.6	20	20	18	45

ZY04-12 Medium Static Indoor Blower - Without Powered Convenience Outlet (Continued)

Size (Tons)	Nominal Unit Voltage	Compressor 1			Compressor 2			OD Fan Motors (each)	Supply Blower Motor	Pwr Exh Motor	Pwr Conv Outlet	Electric Heat Field Installed Kit 2EK045*				MCA[1] (Amps)	Min Fuse[2]/ Breaker[3] Size (Amps)	Max Fuse[2]/ Breaker[3] Size (Amps)	Min Discon-nect Rating[4]		MCA[1] w/Pwr Exh (Amps)	Min Fuse[2]/ Breaker[3] Size w/ Pwr Exh (Amps)	Max Fuse[2]/ Breaker[3] Size w/ Pwr Exh (Amps)	Min Discon-nect Rating[4]/ Pwr Exh	
		RLA	LRA	MCC	RLA	LRA	MCC					Model	kW	Stages	Amps				FLA	LRA				FLA	LRA
06 (5)	208-1-60	25	134	39				2.3	6.8	1.5		None	-	-	-	40.4	45	60	39	171	41.9	45	60	41	175
												10625	4.9	1	23.6	40.4	45	60	39	171	41.9	45	60	41	175
												11125	7.9	1	38	56	60	60	52	171	57.9	60	60	53	175
	230-1-60	25	134	39				2.3	6.2	1.3		None	-	-	-	39.8	40	60	39	172	41.1	45	60	40	175
												10625	6.5	1	27.1	41.6	45	60	39	172	43.3	45	60	40	175
												11125	10.5	1	43.8	62.5	70	70	58	172	64.1	70	70	59	175
	208-3-60	15.9	110	25				2.3	7	1.1		None	-	-	-	29.2	30	45	29	175	30.3	35	45	30	177
												10625	4.9	1	13.6	29.2	30	45	29	175	30.3	35	45	30	177
												11125	7.9	1	21.9	36.1	40	45	33	175	37.5	40	45	35	177
												11625	12	1	33.3	50.4	60	60	46	175	51.8	60	60	48	177
	230-3-60	15.9	110	25				2.3	7.2	1		None	-	-	-	29.4	30	45	29	177	30.4	35	45	30	179
												10625	6.5	1	15.6	29.4	30	45	29	177	30.4	35	45	30	179
												11125	10.5	1	25.3	40.6	45	45	37	177	41.9	45	45	39	179
												11625	16	1	38.5	57.1	60	60	53	177	58.4	60	60	54	179
	460-3-60	7.1	52	11				1.3	3.6	0.5		None	-	-	-	13.8	15	20	14	86	14.3	15	20	14	87
												11146	6	1	7.2	13.8	15	20	12	86	14.3	15	20	13	87
												11146	11.5	1	13.8	21.8	25	25	20	86	22.4	25	25	21	87
												11446	14	1	16.8	25.5	30	30	23	86	26.1	30	30	24	87
	575-3-60	5.1	39.5	8				1.1	2.5	0.4		None	-	-	-	10	15	15	10	60	10.4	15	15	10	60
												11458	13.8	1	13.3	19.8	20	20	18	60	20.3	25	25	19	60
												12358	23	1	22.1	30.8	35	35	28	60	31.3	35	35	29	60
07 (6)	208-3-60	19	123	30				2.3	7.5	1.1		None	-	-	-	35.9	40	50	36	191	38.1	40	50	38	201
												10725	4.9	1	13.6	35.9	40	50	36	191	38.1	40	50	38	201
												11725	12	1	33.3	51	60	60	47	191	53.8	60	60	49	201
												12525	18.6	1	51.6	73.9	80	80	68	191	76.6	80	80	70	201
	230-3-60	19	123	30				2.3	7.5	1		None	-	-	-	35.9	40	50	36	198	37.9	40	50	38	193
												10725	6.5	1	15.6	35.9	40	50	36	198	37.9	40	50	38	193
												11725	16	1	38.5	57.5	60	60	53	198	60	60	60	55	193
												12525	24.8	1	59.7	84	90	90	77	198	86.5	90	90	80	193
	460-3-60	9.7	62	15				1.3	3.4	0.5		None	-	-	-	18.1	20	25	18	101	19.1	20	25	19	98
												10746	6	1	7.2	18.1	20	25	12	101	19.1	20	25	13	98
												11746	16.5	1	19.8	29	30	30	27	101	30.3	35	35	28	98
												12646	25.5	1	30.7	42.6	45	45	39	101	43.9	45	45	40	98
	575-3-60	7.4	50	12				1.1	2.8	0.4		None	-	-	-	14.3	15	20	14	81	15.1	20	20	15	79
												11758	17	1	16.4	24	25	25	22	81	25	25	25	23	79
												12658	25.7	1	24.7	34.4	35	35	32	81	35.4	40	40	33	79
A7 (6)	208-3-60	17.6	136	27				2.3	7.5	1.1		None	-	-	-	34.1	35	50	34	194	36.3	40	50	37	199
												10725	4.9	1	13.6	34.1	35	50	34	194	36.3	40	50	37	199
												11725	12	1	33.3	51	60	60	47	194	53.8	60	60	49	199
												12525	18.6	1	51.6	73.9	80	80	68	194	76.6	80	80	70	199
	230-3-60	17.6	136	27				2.3	7.5	1		None	-	-	-	34.1	35	50	34	201	36.1	40	50	36	206
												10725	6.5	1	15.6	34.1	35	50	34	201	36.1	40	50	36	206
												11725	16	1	38.5	57.5	60	60	53	201	60	60	60	55	206
												12525	24.8	1	59.7	84	90	90	77	201	86.5	90	90	80	206
	460-3-60	8.5	66.1	13				1.3	3.4	0.5		None	-	-	-	16.6	20	25	17	99	17.6	20	25	18	102
												10746	6	1	7.2	16.6	20	25	12	99	17.6	20	25	13	102
												11746	16.5	1	19.8	29	30	30	27	99	30.3	35	35	28	102
												12646	25.5	1	30.7	42.6	45	45	39	99	43.9	45	45	40	102
	575-3-60	6.3	55.3	10				1.1	2.8	0.4		None	-	-	-	12.9	15	15	13	82	13.7	15	15	14	84
												11758	17	1	16.4	24	25	25	22	82	25	25	25	23	84
												12658	25.7	1	24.7	34.4	35	35	32	82	35.4	40	40	33	84

ZY04-12 Medium Static Indoor Blower - Without Powered Convenience Outlet (Continued)

Size (Tons)	Nominal Unit Voltage	Compressor 1			Compressor 2			OD Fan Motors (each)	Supply Blower Motor	Pwr Exh Motor	Pwr Conv Outlet	Electric Heat Field Installed Kit 2EK045*				MCA[1] (Amps)	Min Fuse[2]/ Breaker[3] Size (Amps)	Max Fuse[2]/ Breaker[3] Size (Amps)	Min Discon-nect Rating[4]		MCA[1] w/Pwr Exh (Amps)	Min Fuse[2]/ Breaker[3] Size w/ Pwr Exh (Amps)	Max Fuse[2]/ Breaker[3] Size w/ Pwr Exh (Amps)	Min Discon-nect Rating[4]/ Pwr Exh	
		RLA	LRA	MCC	RLA	LRA	MCC					Model	kW	Stages	Amps				FLA	LRA				FLA	LRA
08 (7.5)	208-3-60	13.6	83.1	21	13.6	83.1	21	2.3	5.2	1.1		None	-	-	-	40.4	45	50	43	208	42.6	45	50	45	218
												11725	12	1	33.3	48.1	50	50	44	208	50.9	60	60	47	218
												12525	18.6	1	51.6	71	80	80	65	208	73.8	80	80	68	218
												13225	24	1	66.6	89.8	90	90	83	208	92.5	100	100	85	218
												14225	31.8	2	88.3	116.9	125	125	108	208	119.6	125	125	110	218
	230-3-60	13.6	83.1	21	13.6	83.1	21	2.3	5.2	1		None	-	-	-	40.4	45	50	43	211	42.4	45	50	45	206
												11725	16	1	38.5	54.6	60	60	50	211	57.1	60	60	53	206
												12525	24.8	1	59.7	81.1	90	90	75	211	83.6	90	90	77	206
												13225	32	1	77	102.8	110	110	95	211	105.3	110	110	97	206
												14225	42.4	2	102	134	150	150	123	211	136.5	150	150	126	206
	460-3-60	6.1	41	10	6.1	41	10	1.3	2.6	0.5		None	-	-	-	18.9	20	25	20	106	19.9	20	25	21	103
												11746	16.5	1	19.8	28	30	30	26	106	29.3	30	30	27	103
												12846	27.8	1	33.4	45	45	45	41	106	46.3	50	50	43	103
												13346	33	1	39.7	52.9	60	60	49	106	54.1	60	60	50	103
												14246	41.7	2	50.2	66	70	70	61	106	67.3	70	70	62	103
	575-3-60	4.2	33	7	4.2	33	7	1.1	2	0.4		None	-	-	-	13.7	15	15	14	85	14.5	15	15	15	83
												11758	17	1	16.4	23	25	25	21	85	24	25	25	22	83
												13458	34	1	32.7	43.4	45	45	40	85	44.4	45	45	41	83
09 (8.5)	208-3-60	13.7	83.1	21	13.7	83.1	21	2.3	5.2	1.1		None	-	-	-	40.6	45	50	43	208	42.8	45	50	45	218
												11725	12	1	33.3	48.1	50	50	44	208	50.9	60	60	47	218
												12525	18.6	1	51.6	71	80	80	65	208	73.8	80	80	68	218
												13225	24	1	66.6	89.8	90	90	83	208	92.5	100	100	85	218
												14225	31.8	2	88.3	116.9	125	125	108	208	119.6	125	125	110	218
	230-3-60	13.7	83.1	21	13.7	83.1	21	2.3	5.2	1		None	-	-	-	40.6	45	50	43	211	42.6	45	50	45	206
												11725	16	1	38.5	54.6	60	60	50	211	57.1	60	60	53	206
												12525	24.8	1	59.7	81.1	90	90	75	211	83.6	90	90	77	206
												13225	32	1	77	102.8	110	110	95	211	105.3	110	110	97	206
												14225	42.4	2	102	134	150	150	123	211	136.5	150	150	126	206
	460-3-60	6.2	41	10	6.2	41	10	1.3	2.6	0.5		None	-	-	-	19.2	20	25	20	106	20.2	25	25	21	103
												11746	16.5	1	19.8	28	30	30	26	106	29.3	30	30	27	103
												12846	27.8	1	33.4	45	45	45	41	106	46.3	50	50	43	103
												13346	33	1	39.7	52.9	60	60	49	106	54.1	60	60	50	103
												14246	41.7	2	50.2	66	70	70	61	106	67.3	70	70	62	103
	575-3-60	4.8	33	8	4.8	33	8	1.1	2	0.4		None	-	-	-	15	20	20	16	85	15.8	20	20	17	83
												11758	17	1	16.4	23	25	25	21	85	24	25	25	22	83
												13458	34	1	32.7	43.4	45	45	40	85	44.4	45	45	41	83
12 (10)	208-3-60	16	110	25	16	110	25	5.8	10.2	1.1		None	-	-	-	52	60	60	55	305	54.2	60	60	58	315
												11725	12	1	33.3	54.4	60	60	55	305	57.1	60	60	58	315
												12525	18.6	1	51.6	77.3	80	80	71	305	80	90	90	74	315
												13225	24	1	66.6	96	100	100	88	305	98.8	100	100	91	315
												14225	31.8	2	88.3	123.1	125	125	113	305	125.9	150	150	116	315
	230-3-60	16	110	25	16	110	25	5.2	10.2	1		None	-	-	-	51.4	60	60	55	308	53.4	60	60	57	313
												11725	16	1	38.5	60.9	70	70	56	308	63.4	70	70	58	313
												12525	24.8	1	59.7	87.4	90	90	80	308	89.9	90	90	83	313
												13225	32	1	77	109	110	110	100	308	111.5	125	125	103	313
												14225	42.4	2	102	140.3	150	150	129	308	142.8	150	150	131	313
	460-3-60	7.8	52	12	7.8	52	12	2.9	4.8	0.5		None	-	-	-	25.3	30	30	27	150	26.3	30	30	28	152
												11746	16.5	1	19.8	30.8	35	35	28	150	32	35	35	29	152
												12846	27.8	1	33.4	47.8	50	50	44	150	49	50	50	45	152
												13346	33	1	39.7	55.6	60	60	51	150	56.9	60	60	52	152
												14246	41.7	2	50.2	68.8	70	70	63	150	70	70	70	64	152
	575-3-60	5.7	38.9	9	5.7	38.9	9	2.2	3.4	0.4		None	-	-	-	18.4	20	20	20	117	19.2	20	20	20	119
												11758	17	1	16.4	24.8	25	25	23	117	25.8	30	30	24	119
												13458	34	1	32.7	45.1	50	50	42	117	46.1	50	50	42	119

ZY04-12 Medium Static Indoor Blower - Without Powered Convenience Outlet (Continued)

Size (Tons)	Nominal Unit Voltage	Compressor 1			Compressor 2			OD Fan Motors (each)	Supply Blower Motor	Pwr Exh Motor	Pwr Conv Outlet	Electric Heat Field Installed Kit 2EK045*				MCA[1] (Amps)	Min Fuse[2]/ Breaker[3] Size (Amps)	Max Fuse[2]/ Breaker[3] Size (Amps)	Min Discon-nect Rating[4]		MCA[1] w/Pwr Exh (Amps)	Min Fuse[2]/ Breaker[3] Size w/ Pwr Exh (Amps)	Max Fuse[2]/ Breaker[3] Size w/ Pwr Exh (Amps)	Min Discon-nect Rating[4]/ Pwr Exh	
		RLA	LRA	MCC	RLA	LRA	MCC					Model	kW	Stages	Amps				FLA	LRA				FLA	LRA
With VFD																									
A7 (6)	208-3-60	17.6	136	27				2.3	8.9	1.1		None	-	-	-	35.5	40	50	36	207	37.7	40	50	38	212
												10725	4.9	1	13.6	35.5	40	50	36	207	37.7	40	50	38	212
												11725	12	1	33.3	52.8	60	60	49	207	55.5	60	60	51	212
												12525	18.6	1	51.6	75.6	80	80	70	207	78.4	80	80	72	212
	230-3-60	17.6	136	27				2.3	8.2	1		None	-	-	-	34.8	35	50	35	215	36.8	40	50	37	220
												10725	6.5	1	15.6	34.8	35	50	35	215	36.8	40	50	37	220
												11725	16	1	38.5	58.4	60	60	54	215	60.9	70	70	56	220
												12525	24.8	1	59.7	84.9	90	90	78	215	87.4	90	90	80	220
	460-3-60	8.5	66.1	13				1.3	4.1	0.5		None	-	-	-	17.3	20	25	17	106	18.3	20	25	19	109
												10746	6	1	7.2	17.3	20	25	13	106	18.3	20	25	14	109
												11746	16.5	1	19.8	29.9	30	30	27	106	31.1	35	35	29	109
												12646	25.5	1	30.7	43.5	45	45	40	106	44.8	45	45	41	109
	575-3-60	6.3	55.3	10				1.1	3.2	0.4		None	-	-	-	13.3	15	15	13	86	14.1	15	15	14	88
												11758	17	1	16.4	24.5	25	25	23	86	25.5	30	30	23	88
												12658	25.7	1	24.7	34.9	35	35	32	86	35.9	40	40	33	88
08 (7.5)	208-3-60	13.6	83.1	21	13.6	83.1	21	2.3	7	1.1		None	-	-	-	42.2	45	50	45	246	44.4	45	50	47	256
												11725	12	1	33.3	50.4	60	60	46	246	53.1	60	60	49	256
												12525	18.6	1	51.6	73.3	80	80	67	246	76	80	80	70	256
												13225	24	1	66.6	92	100	100	85	246	94.8	100	100	87	256
												14225	31.8	2	88.3	119.1	125	125	110	246	121.9	125	125	112	256
	230-3-60	13.6	83.1	21	13.6	83.1	21	2.3	7.2	1		None	-	-	-	42.4	45	50	45	248	44.4	45	50	47	243
												11725	16	1	38.5	57.1	60	60	53	248	59.6	60	60	55	243
												12525	24.8	1	59.7	83.6	90	90	77	248	86.1	90	90	79	243
												13225	32	1	77	105.3	110	110	97	248	107.8	110	110	99	243
												14225	42.4	2	102	136.5	150	150	126	248	139	150	150	128	243
	460-3-60	6.1	41	10	6.1	41	10	1.3	3.6	0.5		None	-	-	-	19.9	20	25	21	125	20.9	25	25	22	121
												11746	16.5	1	19.8	29.3	30	30	27	125	30.5	35	35	28	121
												12846	27.8	1	33.4	46.3	50	50	43	125	47.5	50	50	44	121
												13346	33	1	39.7	54.1	60	60	50	125	55.4	60	60	51	121
												14246	41.7	2	50.2	67.3	70	70	62	125	68.5	70	70	63	121
	575-3-60	4.2	33	7	4.2	33	7	1.1	2.5	0.4		None	-	-	-	14.2	15	15	15	93	15	15	15	16	90
												11758	17	1	16.4	23.6	25	25	22	93	24.6	25	25	23	90
												13458	34	1	32.7	44	45	45	40	93	45	45	45	41	90
09 (8.5)	208-3-60	13.7	83.1	21	13.7	83.1	21	2.3	7	1.1		None	-	-	-	42.4	45	50	45	246	44.6	45	50	47	256
												11725	12	1	33.3	50.4	60	60	46	246	53.1	60	60	49	256
												12525	18.6	1	51.6	73.3	80	80	67	246	76	80	80	70	256
												13225	24	1	66.6	92	100	100	85	246	94.8	100	100	87	256
												14225	31.8	2	88.3	119.1	125	125	110	246	121.9	125	125	112	256
	230-3-60	13.7	83.1	21	13.7	83.1	21	2.3	7.2	1		None	-	-	-	42.6	45	50	45	248	44.6	45	50	47	243
												11725	16	1	38.5	57.1	60	60	53	248	59.6	60	60	55	243
												12525	24.8	1	59.7	83.6	90	90	77	248	86.1	90	90	79	243
												13225	32	1	77	105.3	110	110	97	248	107.8	110	110	99	243
												14225	42.4	2	102	136.5	150	150	126	248	139	150	150	128	243
	460-3-60	6.2	41	10	6.2	41	10	1.3	3.6	0.5		None	-	-	-	20.2	25	25	21	125	21.2	25	25	23	121
												11746	16.5	1	19.8	29.3	30	30	27	125	30.5	35	35	28	121
												12846	27.8	1	33.4	46.3	50	50	43	125	47.5	50	50	44	121
												13346	33	1	39.7	54.1	60	60	50	125	55.4	60	60	51	121
												14246	41.7	2	50.2	67.3	70	70	62	125	68.5	70	70	63	121
	575-3-60	4.8	33	8	4.8	33	8	1.1	2.5	0.4		None	-	-	-	15.5	20	20	16	93	16.3	20	20	17	90
												11758	17	1	16.4	23.6	25	25	22	93	24.6	25	25	23	90
												13458	34	1	32.7	44	45	45	40	93	45	45	45	41	90

ZY04-12 Medium Static Indoor Blower - Without Powered Convenience Outlet (Continued)

Size (Tons)	Nominal Unit Voltage	Compressor 1			Compressor 2			OD Fan Motors (each)	Supply Blower Motor	Pwr Exh Motor	Pwr Conv Outlet	Electric Heat Field Installed Kit 2EK045*				MCA[1] (Amps)	Min Fuse[2]/ Breaker[3] Size (Amps)	Max Fuse[2]/ Breaker[3] Size (Amps)	Min Discon-nect Rating[4]		MCA[1] w/Pwr Exh (Amps)	Min Fuse[2]/ Breaker[3] Size w/ Pwr Exh (Amps)	Max Fuse[2]/ Breaker[3] Size w/ Pwr Exh (Amps)	Min Discon-nect Rating[4]/ Pwr Exh	
		RLA	LRA	MCC	RLA	LRA	MCC					Model	kW	Stages	Amps				FLA	LRA				FLA	LRA
12 (10)	208-3-60	16	110	25	16	110	25	5.8	9.9	1.1		None	-	-	-	51.7	60	60	55	315	53.9	60	60	57	325
												11725	12	1	33.3	54	60	60	55	315	56.8	60	60	57	325
												12525	18.6	1	51.6	76.9	80	80	71	315	79.6	80	80	73	325
												13225	24	1	66.6	95.6	100	100	88	315	98.4	100	100	91	325
												14225	31.8	2	88.3	122.8	125	125	113	315	125.5	150	150	115	325
	230-3-60	16	110	25	16	110	25	5.2	9.4	1		None	-	-	-	50.6	60	60	54	320	52.6	60	60	56	324
												11725	16	1	38.5	59.9	60	60	55	320	62.4	70	70	57	324
												12525	24.8	1	59.7	86.4	90	90	79	320	88.9	90	90	82	324
												13225	32	1	77	108	110	110	99	320	110.5	125	125	102	324
												14225	42.4	2	102	139.3	150	150	128	320	141.8	150	150	130	324
	460-3-60	7.8	52	12	7.8	52	12	2.9	4.7	0.5		None	-	-	-	25.2	30	30	27	155	26.2	30	30	28	158
												11746	16.5	1	19.8	30.6	35	35	28	155	31.9	35	35	29	158
												12846	27.8	1	33.4	47.6	50	50	44	155	48.9	50	50	45	158
												13346	33	1	39.7	55.5	60	60	51	155	56.8	60	60	52	158
												14246	41.7	2	50.2	68.6	70	70	63	155	69.9	70	70	64	158
	575-3-60	5.7	38.9	9	5.7	38.9	9	2.2	4.3	0.4		None	-	-	-	19.3	20	25	21	129	20.1	25	25	22	131
												11758	17	1	16.4	25.9	30	30	24	129	26.9	30	30	25	131
												13458	34	1	32.7	46.3	50	50	43	129	47.3	50	50	43	131

1. Minimum Circuit Ampacity.
2. Dual Element, Time Delay Type.
3. HACR type per NEC.
4. Non-fused Disconnect, Verify on the unit nameplate that the disconnect is properly sized for the application. Units with field installed electric heat kits may exceed the factory installed disconnect amperage rating.

ZY04-12 Medium Static Indoor Blower - With Powered Convenience Outlet

Size (Tons)	Nominal Unit Voltage	Compressor 1			Compressor 2			OD Fan Motors (each)	Supply Blower Motor	Pwr Exh Motor	Pwr Conv Outlet	Electric Heat Field Installed Kit 2EK045*				MCA[1] (Amps)	Min Fuse[2]/ Breaker[3] Size (Amps)	Max Fuse[2]/ Breaker[3] Size (Amps)	Min Discon-nect Rating[4]		MCA[1] w/Pwr Exh (Amps)	Min Fuse[2]/ Breaker[3] Size w/ Pwr Exh (Amps)	Max Fuse[2]/ Breaker[3] Size w/ Pwr Exh (Amps)	Min Discon-nect Rating[4]/ Pwr Exh	
		RLA	LRA	MCC	RLA	LRA	MCC					Model	kW	Stages	Amps				FLA	LRA				FLA	LRA
04 (3)	208-1-60	16.7	79	26				1.4	7.6	1.5	8.6	None	-	-	-	34.2	35	50	35	120	35.7	40	50	36	123
												10625	4.9	1	23.6	44.4	45	50	41	120	46.3	50	50	43	123
												11125	7.9	1	38	62.4	70	70	57	120	64.3	70	70	59	123
	230-1-60	16.7	79	26				1.4	7	1.3	8.6	None	-	-	-	33.6	35	50	34	122	34.9	35	50	35	125
												10625	6.5	1	27.1	48	50	50	44	122	49.6	50	50	46	125
												11125	10.5	1	43.8	68.9	70	70	63	122	70.5	80	80	65	125
	208-3-60	10.4	73	16				1.4	5.2	1.1	8.6	None	-	-	-	23.9	25	30	24	103	25	25	35	26	105
												10625	4.9	1	13.6	28.9	30	30	27	103	30.3	35	35	28	105
												11125	7.9	1	21.9	39.3	40	40	36	103	40.6	45	45	37	105
												11625	12	1	33.3	53.5	60	60	49	103	54.9	60	60	50	105
	230-3-60	10.4	73	16				1.4	5.2	1	8.6	None	-	-	-	23.9	25	30	24	106	24.9	25	35	26	108
												10625	6.5	1	15.6	31.4	35	35	29	106	32.6	35	35	30	108
												11125	10.5	1	25.3	43.5	45	45	40	106	44.8	45	45	41	108
												11625	16	1	38.5	60	60	60	55	106	61.3	70	70	56	108
	460-3-60	5.8	38	9				0.8	2.6	0.5	8.6	None	-	-	-	12.9	15	15	13	55	13.4	15	15	14	56
												10646	6	1	7.2	14.9	15	15	14	55	15.6	20	20	14	56
												11146	11.5	1	13.8	23.2	25	25	21	55	23.8	25	25	22	56
												11446	14	1	16.8	26.9	30	30	25	55	27.6	30	30	25	56
	575-3-60	3.8	36.5	6				0.6	2	0.4	8.6	None	-	-	-	9.1	15	15	9	50	9.5	15	15	10	51
												11058	9.2	1	8.9	15.8	20	20	15	50	16.3	20	20	15	51
												11458	13.8	1	13.3	21.3	25	25	20	50	21.8	25	25	20	51
05 (4)	208-1-60	21.8	117	34				1.4	7.6	1.5	8.6	None	-	-	-	40.6	45	60	40	158	42.1	45	60	42	161
												10625	4.9	1	23.6	44.4	45	60	41	158	46.3	50	60	43	161
												11125	7.9	1	38	62.4	70	70	57	158	64.3	70	70	59	161
	230-1-60	21.8	117	34				1.4	7	1.3	8.6	None	-	-	-	40	40	60	40	160	41.3	45	60	41	163
												10625	6.5	1	27.1	48	50	60	44	160	49.6	50	60	46	163
												11125	10.5	1	43.8	68.9	70	70	63	160	70.5	80	80	65	163
	208-3-60	13.7	83.1	21				1.4	5.2	1.1	8.6	None	-	-	-	28	30	40	28	113	29.1	30	40	30	116
												10625	4.9	1	13.6	28.9	30	40	28	113	30.3	35	40	30	116
												11125	7.9	1	21.9	39.3	40	40	36	113	40.6	45	45	37	116
												11625	12	1	33.3	53.5	60	60	49	113	54.9	60	60	50	116
	230-3-60	13.7	83.1	21				1.4	5.2	1	8.6	None	-	-	-	28	30	40	28	116	29	30	40	29	118
												10625	6.5	1	15.6	31.4	35	40	29	116	32.6	35	40	30	118
												11125	10.5	1	25.3	43.5	45	45	40	116	44.8	45	45	41	118
												11625	16	1	38.5	60	60	60	55	116	61.3	70	70	56	118
	460-3-60	6.2	41	10				0.8	2.6	0.5	8.6	None	-	-	-	13.4	15	15	14	58	13.9	15	15	14	59
												10646	6	1	7.2	14.9	15	15	14	58	15.6	20	20	14	59
												11146	11.5	1	13.8	23.2	25	25	21	58	23.8	25	25	22	59
												11446	14	1	16.8	26.9	30	30	25	58	27.6	30	30	25	59
	575-3-60	4.8	33	8				0.6	2	0.4	8.6	None	-	-	-	10.3	15	15	10	46	10.7	15	15	11	47
												11058	9.2	1	8.9	15.8	20	20	15	46	16.3	20	20	15	47
												11458	13.8	1	13.3	21.3	25	25	20	46	21.8	25	25	20	47

ZY04-12 Medium Static Indoor Blower - With Powered Convenience Outlet (Continued)

Size (Tons)	Nominal Unit Voltage	Compressor 1			Compressor 2			OD Fan Motors (each)	Supply Blower Motor	Pwr Exh Motor	Pwr Conv Outlet	Electric Heat Field Installed Kit 2EK045*				MCA[1] (Amps)	Min Fuse[2]/ Breaker[3] Size (Amps)	Max Fuse[2]/ Breaker[3] Size (Amps)	Min Discon-nect Rating[4]		MCA[1] w/Pwr Exh (Amps)	Min Fuse[2]/ Breaker[3] Size w/ Pwr Exh (Amps)	Max Fuse[2]/ Breaker[3] Size w/ Pwr Exh (Amps)	Min Discon-nect Rating[4]/ Pwr Exh	
		RLA	LRA	MCC	RLA	LRA	MCC					Model	kW	Stages	Amps				FLA	LRA				FLA	LRA
06 (5)	208-1-60	25	134	39				2.3	6.8	1.5	8.6	None	-	-	-	44.7	45	60	44	176	46.2	50	70	46	179
												10625	4.9	1	23.6	44.7	45	60	44	176	46.2	50	70	46	179
												11125	7.9	1	38	61.4	70	70	56	176	63.3	70	70	58	179
	230-1-60	25	134	39				2.3	6.2	1.3	8.6	None	-	-	-	44.1	45	60	43	176	45.4	50	70	45	179
												10625	6.5	1	27.1	47	50	60	43	176	48.6	50	70	45	179
												11125	10.5	1	43.8	67.9	70	70	62	176	69.5	70	70	64	179
	208-3-60	15.9	110	25				2.3	7	1.1	8.6	None	-	-	-	33.5	35	45	34	179	34.6	35	50	35	182
												10625	4.9	1	13.6	33.5	35	45	34	179	34.6	35	50	35	182
												11125	7.9	1	21.9	41.5	45	45	38	179	42.9	45	50	39	182
												11625	12	1	33.3	55.8	60	60	51	179	57.1	60	60	53	182
	230-3-60	15.9	110	25				2.3	7.2	1	8.6	None	-	-	-	33.7	35	45	34	181	34.7	35	50	35	183
												10625	6.5	1	15.6	33.9	35	45	34	181	35.1	40	50	35	183
												11125	10.5	1	25.3	46	50	50	42	181	47.3	50	50	43	183
												11625	16	1	38.5	62.5	70	70	58	181	63.8	70	70	59	183
	460-3-60	7.1	52	11				1.3	3.6	0.5	8.6	None	-	-	-	16	20	20	16	88	16.5	20	20	17	89
												11146	6	1	7.2	16.2	20	20	15	88	16.8	20	20	15	89
												11146	11.5	1	13.8	24.4	25	25	22	88	25.1	30	30	23	89
												11446	14	1	16.8	28.2	30	30	26	88	28.8	30	30	27	89
	575-3-60	5.1	39.5	8				1.1	2.5	0.4	8.6	None	-	-	-	11.7	15	15	12	61	12.1	15	15	12	62
												11458	13.8	1	13.3	21.9	25	25	20	61	22.4	25	25	21	62
												12358	23	1	22.1	32.9	35	35	30	61	33.4	35	35	31	62
07 (6)	208-3-60	19	123	30				2.3	7.5	1.1	8.6	None	-	-	-	40.2	45	50	41	195	42.4	45	60	43	205
												10725	4.9	1	13.6	40.2	45	50	41	195	42.4	45	60	43	205
												11725	12	1	33.3	56.4	60	60	52	195	59.1	60	60	54	205
												12525	18.6	1	51.6	79.3	80	80	73	195	82	90	90	75	205
	230-3-60	19	123	30				2.3	7.5	1	8.6	None	-	-	-	40.2	45	50	41	202	42.2	45	60	43	197
												10725	6.5	1	15.6	40.2	45	50	41	202	42.2	45	60	43	197
												11725	16	1	38.5	62.9	70	70	58	202	65.4	70	70	60	197
												12525	24.8	1	59.7	89.4	90	90	82	202	91.9	100	100	85	197
	460-3-60	9.7	62	15				1.3	3.4	0.5	8.6	None	-	-	-	20.3	25	30	21	103	21.3	25	30	22	100
												10746	6	1	7.2	20.3	25	30	15	103	21.3	25	30	16	100
												11746	16.5	1	19.8	31.7	35	35	29	103	32.9	35	35	30	100
												12646	25.5	1	30.7	45.3	50	50	42	103	46.6	50	50	43	100
	575-3-60	7.4	50	12				1.1	2.8	0.4	8.6	None	-	-	-	16	20	20	16	83	16.8	20	20	17	80
												11758	17	1	16.4	26.2	30	30	24	83	27.2	30	30	25	80
												12658	25.7	1	24.7	36.5	40	40	34	83	37.5	40	40	35	80
A7 (6)	208-3-60	17.6	136	27				2.3	7.5	1.1	8.6	None	-	-	-	38.4	40	50	39	199	40.6	45	50	42	204
												10725	4.9	1	13.6	38.4	40	50	39	199	40.6	45	50	42	204
												11725	12	1	33.3	56.4	60	60	52	199	59.1	60	60	54	204
												12525	18.6	1	51.6	79.3	80	80	73	199	82	90	90	75	204
	230-3-60	17.6	136	27				2.3	7.5	1	8.6	None	-	-	-	38.4	40	50	39	205	40.4	45	50	41	210
												10725	6.5	1	15.6	38.4	40	50	39	205	40.4	45	50	41	210
												11725	16	1	38.5	62.9	70	70	58	205	65.4	70	70	60	210
												12525	24.8	1	59.7	89.4	90	90	82	205	91.9	100	100	85	210
	460-3-60	8.5	66.1	13				1.3	3.4	0.5	8.6	None	-	-	-	18.8	20	25	19	102	19.8	20	25	20	104
												10746	6	1	7.2	18.8	20	25	15	102	19.8	20	25	16	104
												11746	16.5	1	19.8	31.7	35	35	29	102	32.9	35	35	30	104
												12646	25.5	1	30.7	45.3	50	50	42	102	46.6	50	50	43	104
	575-3-60	6.3	55.3	10				1.1	2.8	0.4	8.6	None	-	-	-	14.6	15	20	15	84	15.4	20	20	16	86
												11758	17	1	16.4	26.2	30	30	24	84	27.2	30	30	25	86
												12658	25.7	1	24.7	36.5	40	40	34	84	37.5	40	40	35	86

ZY04-12 Medium Static Indoor Blower - With Powered Convenience Outlet (Continued)

Size (Tons)	Nominal Unit Voltage	Compressor 1			Compressor 2			OD Fan Motors (each)	Supply Blower Motor	Pwr Exh Motor	Pwr Conv Outlet	Electric Heat Field Installed Kit 2EK045*				MCA[1] (Amps)	Min Fuse[2]/ Breaker[3] Size (Amps)	Max Fuse[2]/ Breaker[3] Size (Amps)	Min Discon-nect Rating[4]		MCA[1] w/Pwr Exh (Amps)	Min Fuse[2]/ Breaker[3] Size w/ Pwr Exh (Amps)	Max Fuse[2]/ Breaker[3] Size w/ Pwr Exh (Amps)	Min Discon-nect Rating[4]/ Pwr Exh	
		RLA	LRA	MCC	RLA	LRA	MCC					Model	kW	Stages	Amps				FLA	LRA				FLA	LRA
08 (7.5)	208-3-60	13.6	83.1	21	13.6	83.1	21	2.3	5.2	1.1	8.6	None	-	-	-	44.7	45	50	47	212	46.9	50	50	50	222
												11725	12	1	33.3	53.5	60	60	49	212	56.3	60	60	52	222
												12525	18.6	1	51.6	76.4	80	80	70	212	79.1	80	80	73	222
												13225	24	1	66.6	95.1	100	100	88	212	97.9	100	100	90	222
												14225	31.8	2	88.3	122.3	125	125	112	212	125	150	150	115	222
	230-3-60	13.6	83.1	21	13.6	83.1	21	2.3	5.2	1	8.6	None	-	-	-	44.7	45	50	47	216	46.7	50	60	50	210
												11725	16	1	38.5	60	60	60	55	216	62.5	70	70	58	210
												12525	24.8	1	59.7	86.5	90	90	80	216	89	90	90	82	210
												13225	32	1	77	108.1	110	110	99	216	110.6	125	125	102	210
												14225	42.4	2	102	139.4	150	150	128	216	141.9	150	150	131	210
	460-3-60	6.1	41	10	6.1	41	10	1.3	2.6	0.5	8.6	None	-	-	-	21.1	25	25	23	108	22.1	25	25	24	105
												11746	16.5	1	19.8	30.7	35	35	28	108	31.9	35	35	29	105
												12846	27.8	1	33.4	47.7	50	50	44	108	48.9	50	50	45	105
												13346	33	1	39.7	55.6	60	60	51	108	56.8	60	60	52	105
												14246	41.7	2	50.2	68.7	70	70	63	108	69.9	70	70	64	105
	575-3-60	4.2	33	7	4.2	33	7	1.1	2	0.4	8.6	None	-	-	-	15.4	20	20	16	87	16.2	20	20	17	84
												11758	17	1	16.4	25.2	30	30	23	87	26.2	30	30	24	84
												13458	34	1	32.7	45.5	50	50	42	87	46.5	50	50	43	84
09 (8.5)	208-3-60	13.7	83.1	21	13.7	83.1	21	2.3	5.2	1.1	8.6	None	-	-	-	44.9	45	50	48	212	47.1	50	50	50	222
												11725	12	1	33.3	53.5	60	60	49	212	56.3	60	60	52	222
												12525	18.6	1	51.6	76.4	80	80	70	212	79.1	80	80	73	222
												13225	24	1	66.6	95.1	100	100	88	212	97.9	100	100	90	222
												14225	31.8	2	88.3	122.3	125	125	112	212	125	150	150	115	222
	230-3-60	13.7	83.1	21	13.7	83.1	21	2.3	5.2	1	8.6	None	-	-	-	44.9	45	50	48	216	46.9	50	60	50	210
												11725	16	1	38.5	60	60	60	55	216	62.5	70	70	58	210
												12525	24.8	1	59.7	86.5	90	90	80	216	89	90	90	82	210
												13225	32	1	77	108.1	110	110	99	216	110.6	125	125	102	210
												14225	42.4	2	102	139.4	150	150	128	216	141.9	150	150	131	210
	460-3-60	6.2	41	10	6.2	41	10	1.3	2.6	0.5	8.6	None	-	-	-	21.4	25	25	23	108	22.4	25	25	24	105
												11746	16.5	1	19.8	30.7	35	35	28	108	31.9	35	35	29	105
												12846	27.8	1	33.4	47.7	50	50	44	108	48.9	50	50	45	105
												13346	33	1	39.7	55.6	60	60	51	108	56.8	60	60	52	105
												14246	41.7	2	50.2	68.7	70	70	63	108	69.9	70	70	64	105
	575-3-60	4.8	33	8	4.8	33	8	1.1	2	0.4	8.6	None	-	-	-	16.7	20	20	18	87	17.5	20	20	19	84
												11758	17	1	16.4	25.2	30	30	23	87	26.2	30	30	24	84
												13458	34	1	32.7	45.5	50	50	42	87	46.5	50	50	43	84
12 (10)	208-3-60	16	110	25	16	110	25	5.8	10.2	1.1	8.6	None	-	-	-	56.3	60	70	60	310	58.5	60	70	63	320
												11725	12	1	33.3	59.8	60	70	60	310	62.5	70	70	63	320
												12525	18.6	1	51.6	82.6	90	90	76	310	85.4	90	90	79	320
												13225	24	1	66.6	101.4	110	110	93	310	104.1	110	110	96	320
												14225	31.8	2	88.3	128.5	150	150	118	310	131.3	150	150	121	320
	230-3-60	16	110	25	16	110	25	5.2	10.2	1	8.6	None	-	-	-	55.7	60	70	59	312	57.7	60	70	62	317
												11725	16	1	38.5	66.3	70	70	61	312	68.8	70	70	63	317
												12525	24.8	1	59.7	92.8	100	100	85	312	95.3	100	100	88	317
												13225	32	1	77	114.4	125	125	105	312	116.9	125	125	108	317
												14225	42.4	2	102	145.6	150	150	134	312	148.1	150	150	136	317
	460-3-60	7.8	52	12	7.8	52	12	2.9	4.8	0.5	8.6	None	-	-	-	27.5	30	35	29	152	28.5	30	35	30	154
												11746	16.5	1	19.8	33.4	35	35	31	152	34.7	35	35	32	154
												12846	27.8	1	33.4	50.4	60	60	46	152	51.7	60	60	48	154
												13346	33	1	39.7	58.3	60	60	54	152	59.6	60	60	55	154
												14246	41.7	2	50.2	71.4	80	80	66	152	72.7	80	80	67	154
	575-3-60	5.7	38.9	9	5.7	38.9	9	2.2	3.4	0.4	8.6	None	-	-	-	20.1	25	25	22	118	20.9	25	25	22	120
												11758	17	1	16.4	26.9	30	30	25	118	27.9	30	30	26	120
												13458	34	1	32.7	47.3	50	50	43	118	48.3	50	50	44	120

ZY04-12 Medium Static Indoor Blower - With Powered Convenience Outlet (Continued)

Size (Tons)	Nominal Unit Voltage	Compressor 1			Compressor 2			OD Fan Motors (each)	Supply Blower Motor	Pwr Exh Motor	Pwr Conv Outlet	Electric Heat Field Installed Kit 2EK045*				MCA[1] (Amps)	Min Fuse[2]/ Breaker[3] Size (Amps)	Max Fuse[2]/ Breaker[3] Size (Amps)	Min Discon-nect Rating[4]		MCA[1] w/Pwr Exh (Amps)	Min Fuse[2]/ Breaker[3] Size w/ Pwr Exh (Amps)	Max Fuse[2]/ Breaker[3] Size w/ Pwr Exh (Amps)	Min Discon-nect Rating[4]/ Pwr Exh	
		RLA	LRA	MCC	RLA	LRA	MCC					Model	kW	Stages	Amps				FLA	LRA				FLA	LRA
With VFD																									
A7 (6)	208-3-60	17.6	136	27				2.3	8.9	1.1	8.6	None	-	-	-	39.8	40	50	41	212	42	45	50	43	217
												10725	4.9	1	13.6	39.8	40	50	41	212	42	45	50	43	217
												11725	12	1	33.3	58.1	60	60	53	212	60.9	70	70	56	217
												12525	18.6	1	51.6	81	90	90	75	212	83.8	90	90	77	217
	230-3-60	17.6	136	27				2.3	8.2	1	8.6	None	-	-	-	39.1	40	50	40	219	41.1	45	50	42	224
												10725	6.5	1	15.6	39.1	40	50	40	219	41.1	45	50	42	224
												11725	16	1	38.5	63.8	70	70	59	219	66.3	70	70	61	224
												12525	24.8	1	59.7	90.3	100	100	83	219	92.8	100	100	85	224
	460-3-60	8.5	66.1	13				1.3	4.1	0.5	8.6	None	-	-	-	19.5	20	25	20	109	20.5	25	25	21	111
												10746	6	1	7.2	19.5	20	25	15	109	20.5	25	25	17	111
												11746	16.5	1	19.8	32.6	35	35	30	109	33.8	35	35	31	111
												12646	25.5	1	30.7	46.2	50	50	42	109	47.4	50	50	44	111
	575-3-60	6.3	55.3	10				1.1	3.2	0.4	8.6	None	-	-	-	15	20	20	15	88	15.8	20	20	16	90
												11758	17	1	16.4	26.7	30	30	25	88	27.7	30	30	25	90
												12658	25.7	1	24.7	37	40	40	34	88	38	40	40	35	90
08 (7.5)	208-3-60	13.6	83.1	21	13.6	83.1	21	2.3	7	1.1	8.6	None	-	-	-	46.5	50	60	50	250	48.7	50	60	52	260
												11725	12	1	33.3	55.8	60	60	51	250	58.5	60	60	54	260
												12525	18.6	1	51.6	78.6	80	80	72	250	81.4	90	90	75	260
												13225	24	1	66.6	97.4	100	100	90	250	100.1	110	110	92	260
												14225	31.8	2	88.3	124.5	125	125	115	250	127.3	150	150	117	260
	230-3-60	13.6	83.1	21	13.6	83.1	21	2.3	7.2	1	8.6	None	-	-	-	46.7	50	60	50	252	48.7	50	60	52	247
												11725	16	1	38.5	62.5	70	70	58	252	65	70	70	60	247
												12525	24.8	1	59.7	89	90	90	82	252	91.5	100	100	84	247
												13225	32	1	77	110.6	125	125	102	252	113.1	125	125	104	247
												14225	42.4	2	102	141.9	150	150	131	252	144.4	150	150	133	247
	460-3-60	6.1	41	10	6.1	41	10	1.3	3.6	0.5	8.6	None	-	-	-	22.1	25	25	24	127	23.1	25	25	25	123
												11746	16.5	1	19.8	31.9	35	35	29	127	33.2	35	35	31	123
												12846	27.8	1	33.4	48.9	50	50	45	127	50.2	60	60	46	123
												13346	33	1	39.7	56.8	60	60	52	127	58.1	60	60	53	123
												14246	41.7	2	50.2	69.9	70	70	64	127	71.2	80	80	65	123
	575-3-60	4.2	33	7	4.2	33	7	1.1	2.5	0.4	8.6	None	-	-	-	15.9	20	20	17	95	16.7	20	20	18	92
												11758	17	1	16.4	25.8	30	30	24	95	26.8	30	30	25	92
												13458	34	1	32.7	46.2	50	50	42	95	47.2	50	50	43	92
09 (8.5)	208-3-60	13.7	83.1	21	13.7	83.1	21	2.3	7	1.1	8.6	None	-	-	-	46.7	50	60	50	250	48.9	50	60	52	260
												11725	12	1	33.3	55.8	60	60	51	250	58.5	60	60	54	260
												12525	18.6	1	51.6	78.6	80	80	72	250	81.4	90	90	75	260
												13225	24	1	66.6	97.4	100	100	90	250	100.1	110	110	92	260
												14225	31.8	2	88.3	124.5	125	125	115	250	127.3	150	150	117	260
	230-3-60	13.7	83.1	21	13.7	83.1	21	2.3	7.2	1	8.6	None	-	-	-	46.9	50	60	50	252	48.9	50	60	52	247
												11725	16	1	38.5	62.5	70	70	58	252	65	70	70	60	247
												12525	24.8	1	59.7	89	90	90	82	252	91.5	100	100	84	247
												13225	32	1	77	110.6	125	125	102	252	113.1	125	125	104	247
												14225	42.4	2	102	141.9	150	150	131	252	144.4	150	150	133	247
	460-3-60	6.2	41	10	6.2	41	10	1.3	3.6	0.5	8.6	None	-	-	-	22.4	25	25	24	127	23.4	25	25	25	123
												11746	16.5	1	19.8	31.9	35	35	29	127	33.2	35	35	31	123
												12846	27.8	1	33.4	48.9	50	50	45	127	50.2	60	60	46	123
												13346	33	1	39.7	56.8	60	60	52	127	58.1	60	60	53	123
												14246	41.7	2	50.2	69.9	70	70	64	127	71.2	80	80	65	123
	575-3-60	4.8	33	8	4.8	33	8	1.1	2.5	0.4	8.6	None	-	-	-	17.2	20	20	18	95	18	20	20	19	92
												11758	17	1	16.4	25.8	30	30	24	95	26.8	30	30	25	92
												13458	34	1	32.7	46.2	50	50	42	95	47.2	50	50	43	92

ZY04-12 Medium Static Indoor Blower - With Powered Convenience Outlet (Continued)

Size (Tons)	Nominal Unit Voltage	Compressor 1			Compressor 2			OD Fan Motors (each)	Supply Blower Motor	Pwr Exh Motor	Pwr Conv Outlet	Electric Heat Field Installed Kit 2EK045*				MCA[1] (Amps)	Min Fuse[2]/ Breaker[3] Size (Amps)	Max Fuse[2]/ Breaker[3] Size (Amps)	Min Discon-nect Rating[4]		MCA[1] w/Pwr Exh (Amps)	Min Fuse[2]/ Breaker[3] Size w/ Pwr Exh (Amps)	Max Fuse[2]/ Breaker[3] Size w/ Pwr Exh (Amps)	Min Discon-nect Rating[4]/ Pwr Exh	
		RLA	LRA	MCC	RLA	LRA	MCC					Model	kW	Stages	Amps				FLA	LRA				FLA	LRA
12 (10)	208-3-60	16	110	25	16	110	25	5.8	9.9	1.1	8.6	None	-	-	-	56	60	70	60	319	58.2	60	70	62	329
												11725	12	1	33.3	59.4	60	70	60	319	62.1	70	70	62	329
												12525	18.6	1	51.6	82.3	90	90	76	319	85	90	90	78	329
												13225	24	1	66.6	101	110	110	93	319	103.8	110	110	95	329
												14225	31.8	2	88.3	128.1	150	150	118	319	130.9	150	150	120	329
	230-3-60	16	110	25	16	110	25	5.2	9.4	1	8.6	None	-	-	-	54.9	60	70	59	324	56.9	60	70	61	329
												11725	16	1	38.5	65.3	70	70	60	324	67.8	70	70	62	329
												12525	24.8	1	59.7	91.8	100	100	84	324	94.3	100	100	87	329
												13225	32	1	77	113.4	125	125	104	324	115.9	125	125	107	329
												14225	42.4	2	102	144.6	150	150	133	324	147.1	150	150	135	329
	460-3-60	7.8	52	12	7.8	52	12	2.9	4.7	0.5	8.6	None	-	-	-	27.4	30	35	29	157	28.4	30	35	30	160
												11746	16.5	1	19.8	33.3	35	35	31	157	34.6	35	35	32	160
												12846	27.8	1	33.4	50.3	60	60	46	157	51.6	60	60	47	160
												13346	33	1	39.7	58.2	60	60	54	157	59.4	60	60	55	160
												14246	41.7	2	50.2	71.3	80	80	66	157	72.6	80	80	67	160
	575-3-60	5.7	38.9	9	5.7	38.9	9	2.2	4.3	0.4	8.6	None	-	-	-	21	25	25	23	131	21.8	25	25	23	133
												11758	17	1	16.4	28	30	30	26	131	29	30	30	27	133
												13458	34	1	32.7	48.4	50	50	45	131	49.4	50	50	45	133

1. Minimum Circuit Ampacity.
2. Dual Element, Time Delay Type.
3. HACR type per NEC.
4. Non-fused Disconnect, Verify on the unit nameplate that the disconnect is properly sized for the application. Units with field installed electric heat kits may exceed the factory installed disconnect amperage rating.

ZY04-12 High Static Indoor Blower - Without Powered Convenience Outlet

Size (Tons)	Nominal Unit Voltage	Compressor 1			Compressor 2			OD Fan Motors (each)	Supply Blower Motor	Pwr Exh Motor	Pwr Conv Outlet	Electric Heat Field Installed Kit 2EK045*				MCA[1] (Amps)	Min Fuse[2]/ Breaker[3] Size (Amps)	Max Fuse[2]/ Breaker[3] Size (Amps)	Min Discon-nect Rating[4]		MCA[1] w/Pwr Exh (Amps)	Min Fuse[2]/ Breaker[3] Size w/ Pwr Exh (Amps)	Max Fuse[2]/ Breaker[3] Size w/ Pwr Exh (Amps)	Min Discon-nect Rating[4]/ Pwr Exh	
		RLA	LRA	MCC	RLA	LRA	MCC					Model	kW	Stages	Amps				FLA	LRA				FLA	LRA
04 (3)	208-3-60	10.4	73	16				1.4	5.2	1.1		None	-	-	-	19.6	20	30	20	99	20.7	25	30	21	101
												10625	4.9	1	13.6	23.5	25	30	22	99	24.9	25	30	23	101
												11125	7.9	1	21.9	33.9	35	35	31	99	35.3	40	40	32	101
												11625	12	1	33.3	48.1	50	50	44	99	49.5	50	50	46	101
	230-3-60	10.4	73	16				1.4	5.2	1		None	-	-	-	19.6	20	30	20	101	20.6	25	30	21	104
												10625	6.5	1	15.6	26	30	30	24	101	27.3	30	30	25	104
												11125	10.5	1	25.3	38.1	40	40	35	101	39.4	40	40	36	104
												11625	16	1	38.5	54.6	60	60	50	101	55.9	60	60	51	104
	460-3-60	5.8	38	9				0.8	2.6	0.5		None	-	-	-	10.7	15	15	11	52	11.2	15	15	11	54
												10646	6	1	7.2	12.3	15	15	11	52	12.9	15	15	12	54
												11146	11.5	1	13.8	20.5	25	25	19	52	21.1	25	25	19	54
												11446	14	1	16.8	24.3	25	25	22	52	24.9	25	25	23	54
	575-3-60	3.8	36.5	6				0.6	2	0.4		None	-	-	-	7.4	15	15	7	48	7.8	15	15	8	49
												11058	9.2	1	8.9	13.6	15	15	13	48	14.1	15	15	13	49
												11458	13.8	1	13.3	19.1	20	20	18	48	19.6	20	20	18	49
05 (4)	208-3-60	13.7	83.1	21				1.4	7.5	1.1		None	-	-	-	26	30	35	26	135	27.1	30	40	27	137
												10625	4.9	1	13.6	26.4	30	35	26	135	27.8	30	40	27	137
												11125	7.9	1	21.9	36.8	40	40	34	135	38.1	40	40	35	137
												11625	12	1	33.3	51	60	60	47	135	52.4	60	60	48	137
	230-3-60	13.7	83.1	21				1.4	7.5	1		None	-	-	-	26	30	35	26	141	27	30	40	27	144
												10625	6.5	1	15.6	28.9	30	35	27	141	30.1	35	40	28	144
												11125	10.5	1	25.3	41	45	45	38	141	42.3	45	45	39	144
												11625	16	1	38.5	57.5	60	60	53	141	58.8	60	60	54	144
	460-3-60	6.2	41	10				0.8	3.4	0.5		None	-	-	-	12	15	15	12	70	12.5	15	15	13	72
												10646	6	1	7.2	13.3	15	15	12	70	13.9	15	15	13	72
												11146	11.5	1	13.8	21.5	25	25	20	70	22.1	25	25	20	72
												11446	14	1	16.8	25.3	30	30	23	70	25.9	30	30	24	72
	575-3-60	4.8	33	8				0.6	2.8	0.4		None	-	-	-	9.4	15	15	9	57	9.8	15	15	10	57
												11058	9.2	1	8.9	14.6	15	15	13	57	15.1	20	20	14	57
												11458	13.8	1	13.3	20.1	25	25	19	57	20.6	25	25	19	57
06 (5)	208-3-60	15.9	110	25				2.3	8.9	1.1		None	-	-	-	31.1	35	45	31	192	32.2	35	45	32	194
												10625	4.9	1	13.6	31.1	35	45	31	192	32.2	35	45	32	194
												11125	7.9	1	21.9	38.5	40	45	35	192	39.9	40	45	37	194
												11625	12	1	33.3	52.8	60	60	49	192	54.1	60	60	50	194
	230-3-60	15.9	110	25				2.3	8.2	1		None	-	-	-	30.4	35	45	30	194	31.4	35	45	32	196
												10625	6.5	1	15.6	30.4	35	45	30	194	31.4	35	45	32	196
												11125	10.5	1	25.3	41.9	45	45	39	194	43.1	45	45	40	196
												11625	16	1	38.5	58.4	60	60	54	194	59.6	60	60	55	196
	460-3-60	7.1	52	11				1.3	4.1	0.5		None	-	-	-	14.3	15	20	14	89	14.8	15	20	15	91
												11146	6	1	7.2	14.3	15	20	13	89	14.8	15	20	14	91
												11146	11.5	1	13.8	22.4	25	25	21	89	23	25	25	21	91
												11446	14	1	16.8	26.1	30	30	24	89	26.8	30	30	25	91
	575-3-60	5.1	39.5	8				1.1	3.2	0.4		None	-	-	-	10.7	15	15	11	68	11.1	15	15	11	69
												11458	13.8	1	13.3	20.6	25	25	19	68	21.1	25	25	19	69
												12358	23	1	22.1	31.6	35	35	29	68	32.1	35	35	30	69

ZY04-12 High Static Indoor Blower - Without Powered Convenience Outlet (Continued)

Size (Tons)	Nominal Unit Voltage	Compressor 1			Compressor 2			OD Fan Motors (each)	Supply Blower Motor	Pwr Exh Motor	Pwr Conv Outlet	Electric Heat Field Installed Kit 2EK045*				MCA[1] (Amps)	Min Fuse[2]/ Breaker[3] Size (Amps)	Max Fuse[2]/ Breaker[3] Size (Amps)	Min Discon-nect Rating[4]		MCA[1] w/Pwr Exh (Amps)	Min Fuse[2]/ Breaker[3] Size w/ Pwr Exh (Amps)	Max Fuse[2]/ Breaker[3] Size w/ Pwr Exh (Amps)	Min Discon-nect Rating[4]/ Pwr Exh	
		RLA	LRA	MCC	RLA	LRA	MCC					Model	kW	Stages	Amps				FLA	LRA				FLA	LRA
07 (6)	208-3-60	19	123	30				2.3	10.2	1.1		None	-	-	-	38.6	40	50	39	206	40.8	45	50	41	216
												10725	4.9	1	13.6	38.6	40	50	39	206	40.8	45	50	41	216
												11725	12	1	33.3	54.4	60	60	50	206	57.1	60	60	53	216
												12525	18.6	1	51.6	77.3	80	80	71	206	80	90	90	74	216
	230-3-60	19	123	30				2.3	10.2	1		None	-	-	-	38.6	40	50	39	212	40.6	45	50	41	207
												10725	6.5	1	15.6	38.6	40	50	39	212	40.6	45	50	41	207
												11725	16	1	38.5	60.9	70	70	56	212	63.4	70	70	58	207
												12525	24.8	1	59.7	87.4	90	90	80	212	89.9	90	90	83	207
	460-3-60	9.7	62	15				1.3	4.8	0.5		None	-	-	-	19.5	20	25	20	108	20.5	25	25	21	105
												10746	6	1	7.2	19.5	20	25	14	108	20.5	25	25	15	105
												11746	16.5	1	19.8	30.8	35	35	28	108	32	35	35	29	105
												12646	25.5	1	30.7	44.4	45	45	41	108	45.6	50	50	42	105
	575-3-60	7.4	50	12				1.1	3.4	0.4		None	-	-	-	14.9	15	20	15	87	15.7	20	20	16	84
												11758	17	1	16.4	24.8	25	25	23	87	25.8	30	30	24	84
												12658	25.7	1	24.7	35.1	40	40	32	87	36.1	40	40	33	84
A7 (6)	208-3-60	17.6	136	27				2.3	10.2	1.1		None	-	-	-	36.8	40	50	37	209	39	40	50	40	214
												10725	4.9	1	13.6	36.8	40	50	37	209	39	40	50	40	214
												11725	12	1	33.3	54.4	60	60	50	209	57.1	60	60	53	214
												12525	18.6	1	51.6	77.3	80	80	71	209	80	90	90	74	214
	230-3-60	17.6	136	27				2.3	10.2	1		None	-	-	-	36.8	40	50	37	215	38.8	40	50	40	220
												10725	6.5	1	15.6	36.8	40	50	37	215	38.8	40	50	40	220
												11725	16	1	38.5	60.9	70	70	56	215	63.4	70	70	58	220
												12525	24.8	1	59.7	87.4	90	90	80	215	89.9	90	90	83	220
	460-3-60	8.5	66.1	13				1.3	4.8	0.5		None	-	-	-	18	20	25	18	106	19	20	25	19	109
												10746	6	1	7.2	18	20	25	14	106	19	20	25	15	109
												11746	16.5	1	19.8	30.8	35	35	28	106	32	35	35	29	109
												12646	25.5	1	30.7	44.4	45	45	41	106	45.6	50	50	42	109
	575-3-60	6.3	55.3	10				1.1	3.4	0.4		None	-	-	-	13.5	15	15	14	88	14.3	15	15	15	89
												11758	17	1	16.4	24.8	25	25	23	88	25.8	30	30	24	89
												12658	25.7	1	24.7	35.1	40	40	32	88	36.1	40	40	33	89
08 (7.5)	208-3-60	13.6	83.1	21	13.6	83.1	21	2.3	10.2	1.1		None	-	-	-	45.4	50	50	48	249	47.6	50	60	51	259
												11725	12	1	33.3	54.4	60	60	50	249	57.1	60	60	53	259
												12525	18.6	1	51.6	77.3	80	80	71	249	80	90	90	74	259
												13225	24	1	66.6	96	100	100	88	249	98.8	100	100	91	259
												14225	31.8	2	88.3	123.1	125	125	113	249	125.9	150	150	116	259
	230-3-60	13.6	83.1	21	13.6	83.1	21	2.3	10.2	1		None	-	-	-	45.4	50	50	48	255	47.4	50	60	51	250
												11725	16	1	38.5	60.9	70	70	56	255	63.4	70	70	58	250
												12525	24.8	1	59.7	87.4	90	90	80	255	89.9	90	90	83	250
												13225	32	1	77	109	110	110	100	255	111.5	125	125	103	250
												14225	42.4	2	102	140.3	150	150	129	255	142.8	150	150	131	250
	460-3-60	6.1	41	10	6.1	41	10	1.3	4.8	0.5		None	-	-	-	21.1	25	25	23	128	22.1	25	25	24	125
												11746	16.5	1	19.8	30.8	35	35	28	128	32	35	35	29	125
												12846	27.8	1	33.4	47.8	50	50	44	128	49	50	50	45	125
												13346	33	1	39.7	55.6	60	60	51	128	56.9	60	60	52	125
												14246	41.7	2	50.2	68.8	70	70	63	128	70	70	70	64	125
	575-3-60	4.2	33	7	4.2	33	7	1.1	3.4	0.4		None	-	-	-	15.1	20	20	16	103	15.9	20	20	17	100
												11758	17	1	16.4	24.8	25	25	23	103	25.8	30	30	24	100
												13458	34	1	32.7	45.1	50	50	42	103	46.1	50	50	42	100

ZY04-12 High Static Indoor Blower - Without Powered Convenience Outlet (Continued)

Size (Tons)	Nominal Unit Voltage	Compressor 1			Compressor 2			OD Fan Motors (each)	Supply Blower Motor	Pwr Exh Motor	Pwr Conv Outlet	Electric Heat Field Installed Kit 2EK045*				MCA[1] (Amps)	Min Fuse[2]/ Breaker[3] Size (Amps)	Max Fuse[2]/ Breaker[3] Size (Amps)	Min Discon-nect Rating[4]		MCA[1] w/Pwr Exh (Amps)	Min Fuse[2]/ Breaker[3] Size w/ Pwr Exh (Amps)	Max Fuse[2]/ Breaker[3] Size w/ Pwr Exh (Amps)	Min Discon-nect Rating[4]/ Pwr Exh	
		RLA	LRA	MCC	RLA	LRA	MCC					Model	kW	Stages	Amps				FLA	LRA				FLA	LRA
09 (8.5)	208-3-60	13.7	83.1	21	13.7	83.1	21	2.3	10.2	1.1		None	-	-	-	45.6	50	50	49	249	47.8	50	60	51	259
												11725	12	1	33.3	54.4	60	60	50	249	57.1	60	60	53	259
												12525	18.6	1	51.6	77.3	80	80	71	249	80	90	90	74	259
												13225	24	1	66.6	96	100	100	88	249	98.8	100	100	91	259
												14225	31.8	2	88.3	123.1	125	125	113	249	125.9	150	150	116	259
	230-3-60	13.7	83.1	21	13.7	83.1	21	2.3	10.2	1		None	-	-	-	45.6	50	50	49	255	47.6	50	60	51	250
												11725	16	1	38.5	60.9	70	70	56	255	63.4	70	70	58	250
												12525	24.8	1	59.7	87.4	90	90	80	255	89.9	90	90	83	250
												13225	32	1	77	109	110	110	100	255	111.5	125	125	103	250
												14225	42.4	2	102	140.3	150	150	129	255	142.8	150	150	131	250
	460-3-60	6.2	41	10	6.2	41	10	1.3	4.8	0.5		None	-	-	-	21.4	25	25	23	128	22.4	25	25	24	125
												11746	16.5	1	19.8	30.8	35	35	28	128	32	35	35	29	125
												12846	27.8	1	33.4	47.8	50	50	44	128	49	50	50	45	125
												13346	33	1	39.7	55.6	60	60	51	128	56.9	60	60	52	125
												14246	41.7	2	50.2	68.8	70	70	63	128	70	70	70	64	125
	575-3-60	4.8	33	8	4.8	33	8	1.1	3.4	0.4		None	-	-	-	16.4	20	20	17	103	17.2	20	20	18	100
												11758	17	1	16.4	24.8	25	25	23	103	25.8	30	30	24	100
												13458	34	1	32.7	45.1	50	50	42	103	46.1	50	50	42	100
12 (10)	208-3-60	16	110	25	16	110	25	5.8	14.9	1.1		None	-	-	-	56.7	60	70	61	323	58.9	60	70	63	333
												11725	12	1	33.3	60.3	70	70	61	323	63	70	70	63	333
												12525	18.6	1	51.6	83.1	90	90	76	323	85.9	90	90	79	333
												13225	24	1	66.6	101.9	110	110	94	323	104.6	110	110	96	333
												14225	31.8	2	88.3	129	150	150	119	323	131.8	150	150	121	333
	230-3-60	16	110	25	16	110	25	5.2	15	1		None	-	-	-	56.2	60	70	60	322	58.2	60	70	62	327
												11725	16	1	38.5	66.9	70	70	62	322	69.4	70	70	64	327
												12525	24.8	1	59.7	93.4	100	100	86	322	95.9	100	100	88	327
												13225	32	1	77	115	125	125	106	322	117.5	125	125	108	327
												14225	42.4	2	102	146.3	150	150	135	322	148.8	150	150	137	327
	460-3-60	7.8	52	12	7.8	52	12	2.9	7.5	0.5		None	-	-	-	28	30	35	30	159	29	30	35	31	161
												11746	16.5	1	19.8	34.1	35	35	31	159	35.4	40	40	33	161
												12846	27.8	1	33.4	51.1	60	60	47	159	52.4	60	60	48	161
												13346	33	1	39.7	59	60	60	54	159	60.3	70	70	55	161
												14246	41.7	2	50.2	72.1	80	80	66	159	73.4	80	80	68	161
	575-3-60	5.7	38.9	9	5.7	38.9	9	2.2	5.6	0.4		None	-	-	-	20.6	25	25	22	124	21.4	25	25	23	126
												11758	17	1	16.4	27.5	30	30	25	124	28.5	30	30	26	126
												13458	34	1	32.7	47.9	50	50	44	124	48.9	50	50	45	126
With VFD																									
A7 (6)	208-3-60	17.6	136	27				2.3	9.9	1.1		None	-	-	-	36.5	40	50	37	218	38.7	40	50	39	223
												10725	4.9	1	13.6	36.5	40	50	37	218	38.7	40	50	39	223
												11725	12	1	33.3	54	60	60	50	218	56.8	60	60	52	223
												12525	18.6	1	51.6	76.9	80	80	71	218	79.6	80	80	73	223
	230-3-60	17.6	136	27				2.3	9.4	1		None	-	-	-	36	40	50	36	227	38	40	50	39	231
												10725	6.5	1	15.6	36	40	50	36	227	38	40	50	39	231
												11725	16	1	38.5	59.9	60	60	55	227	62.4	70	70	57	231
												12525	24.8	1	59.7	86.4	90	90	79	227	88.9	90	90	82	231
	460-3-60	8.5	66.1	13				1.3	4.7	0.5		None	-	-	-	17.9	20	25	18	112	18.9	20	25	19	114
												10746	6	1	7.2	17.9	20	25	14	112	18.9	20	25	15	114
												11746	16.5	1	19.8	30.6	35	35	28	112	31.9	35	35	29	114
												12646	25.5	1	30.7	44.3	45	45	41	112	45.5	50	50	42	114
	575-3-60	6.3	55.3	10				1.1	4.3	0.4		None	-	-	-	14.4	15	20	15	100	15.2	20	20	16	102
												11758	17	1	16.4	25.9	30	30	24	100	26.9	30	30	25	102
												12658	25.7	1	24.7	36.3	40	40	33	100	37.3	40	40	34	102

ZY04-12 High Static Indoor Blower - Without Powered Convenience Outlet (Continued)

Size (Tons)	Nominal Unit Voltage	Compressor 1			Compressor 2			OD Fan Motors (each)	Supply Blower Motor	Pwr Exh Motor	Pwr Conv Outlet	Electric Heat Field Installed Kit 2EK045*				MCA[1] (Amps)	Min Fuse[2]/ Breaker[3] Size (Amps)	Max Fuse[2]/ Breaker[3] Size (Amps)	Min Discon-nect Rating[4]		MCA[1] w/Pwr Exh (Amps)	Min Fuse[2]/ Breaker[3] Size w/ Pwr Exh (Amps)	Max Fuse[2]/ Breaker[3] Size w/ Pwr Exh (Amps)	Min Discon-nect Rating[4]/ Pwr Exh	
		RLA	LRA	MCC	RLA	LRA	MCC					Model	kW	Stages	Amps				FLA	LRA				FLA	LRA
08 (7.5)	208-3-60	13.6	83.1	21	13.6	83.1	21	2.3	9.9	1.1		None	-	-	-	45.1	50	50	48	258	47.3	50	50	50	268
												11725	12	1	33.3	54	60	60	50	258	56.8	60	60	52	268
												12525	18.6	1	51.6	76.9	80	80	71	258	79.6	80	80	73	268
												13225	24	1	66.6	95.6	100	100	88	258	98.4	100	100	91	268
												14225	31.8	2	88.3	122.8	125	125	113	258	125.5	150	150	115	268
	230-3-60	13.6	83.1	21	13.6	83.1	21	2.3	9.4	1		None	-	-	-	44.6	45	50	47	267	46.6	50	60	50	261
												11725	16	1	38.5	59.9	60	60	55	267	62.4	70	70	57	261
												12525	24.8	1	59.7	86.4	90	90	79	267	88.9	90	90	82	261
												13225	32	1	77	108	110	110	99	267	110.5	125	125	102	261
												14225	42.4	2	102	139.3	150	150	128	267	141.8	150	150	130	261
	460-3-60	6.1	41	10	6.1	41	10	1.3	4.7	0.5		None	-	-	-	21	25	25	22	134	22	25	25	24	130
												11746	16.5	1	19.8	30.6	35	35	28	134	31.9	35	35	29	130
												12846	27.8	1	33.4	47.6	50	50	44	134	48.9	50	50	45	130
												13346	33	1	39.7	55.5	60	60	51	134	56.8	60	60	52	130
												14246	41.7	2	50.2	68.6	70	70	63	134	69.9	70	70	64	130
	575-3-60	4.2	33	7	4.2	33	7	1.1	4.3	0.4		None	-	-	-	16	20	20	17	115	16.8	20	20	18	113
												11758	17	1	16.4	25.9	30	30	24	115	26.9	30	30	25	113
												13458	34	1	32.7	46.3	50	50	43	115	47.3	50	50	43	113
09 (8.5)	208-3-60	13.7	83.1	21	13.7	83.1	21	2.3	9.9	1.1		None	-	-	-	45.3	50	50	48	258	47.5	50	60	51	268
												11725	12	1	33.3	54	60	60	50	258	56.8	60	60	52	268
												12525	18.6	1	51.6	76.9	80	80	71	258	79.6	80	80	73	268
												13225	24	1	66.6	95.6	100	100	88	258	98.4	100	100	91	268
												14225	31.8	2	88.3	122.8	125	125	113	258	125.5	150	150	115	268
	230-3-60	13.7	83.1	21	13.7	83.1	21	2.3	9.4	1		None	-	-	-	44.8	45	50	48	267	46.8	50	60	50	261
												11725	16	1	38.5	59.9	60	60	55	267	62.4	70	70	57	261
												12525	24.8	1	59.7	86.4	90	90	79	267	88.9	90	90	82	261
												13225	32	1	77	108	110	110	99	267	110.5	125	125	102	261
												14225	42.4	2	102	139.3	150	150	128	267	141.8	150	150	130	261
	460-3-60	6.2	41	10	6.2	41	10	1.3	4.7	0.5		None	-	-	-	21.3	25	25	23	134	22.3	25	25	24	130
												11746	16.5	1	19.8	30.6	35	35	28	134	31.9	35	35	29	130
												12846	27.8	1	33.4	47.6	50	50	44	134	48.9	50	50	45	130
												13346	33	1	39.7	55.5	60	60	51	134	56.8	60	60	52	130
												14246	41.7	2	50.2	68.6	70	70	63	134	69.9	70	70	64	130
	575-3-60	4.8	33	8	4.8	33	8	1.1	4.3	0.4		None	-	-	-	17.3	20	20	19	115	18.1	20	20	19	113
												11758	17	1	16.4	25.9	30	30	24	115	26.9	30	30	25	113
												13458	34	1	32.7	46.3	50	50	43	115	47.3	50	50	43	113
12 (10)	208-3-60	16	110	25	16	110	25	5.8	13.5	1.1		None	-	-	-	55.3	60	70	59	345	57.5	60	70	62	355
												11725	12	1	33.3	58.5	60	70	59	345	61.3	70	70	62	355
												12525	18.6	1	51.6	81.4	90	90	75	345	84.1	90	90	77	355
												13225	24	1	66.6	100.1	110	110	92	345	102.9	110	110	95	355
												14225	31.8	2	88.3	127.3	150	150	117	345	130	150	150	120	355
	230-3-60	16	110	25	16	110	25	5.2	13.4	1		None	-	-	-	54.6	60	70	58	341	56.6	60	70	60	346
												11725	16	1	38.5	64.9	70	70	60	341	67.4	70	70	62	346
												12525	24.8	1	59.7	91.4	100	100	84	341	93.9	100	100	86	346
												13225	32	1	77	113	125	125	104	341	115.5	125	125	106	346
												14225	42.4	2	102	144.3	150	150	133	341	146.8	150	150	135	346
	460-3-60	7.8	52	12	7.8	52	12	2.9	6.7	0.5		None	-	-	-	27.2	30	30	29	166	28.2	30	30	30	168
												11746	16.5	1	19.8	33.1	35	35	30	166	34.4	35	35	32	168
												12846	27.8	1	33.4	50.1	60	60	46	166	51.4	60	60	47	168
												13346	33	1	39.7	58	60	60	53	166	59.3	60	60	55	168
												14246	41.7	2	50.2	71.1	80	80	65	166	72.4	80	80	67	168
	575-3-60	5.7	38.9	9	5.7	38.9	9	2.2	5.4	0.4		None	-	-	-	20.4	25	25	22	129	21.2	25	25	23	131
												11758	17	1	16.4	27.3	30	30	25	129	28.3	30	30	26	131
												13458	34	1	32.7	47.6	50	50	44	129	48.6	50	50	45	131

1. Minimum Circuit Ampacity.
2. Dual Element, Time Delay Type.
3. HACR type per NEC.
4. Non-fused Disconnect, Verify on the unit nameplate that the disconnect is properly sized for the application. Units with field installed electric heat kits may exceed the factory installed disconnect amperage rating.

ZY04-12 High Static Indoor Blower - With Powered Convenience Outlet

Size (Tons)	Nominal Unit Voltage	Compressor 1			Compressor 2			OD Fan Motors (each)	Supply Blower Motor	Pwr Exh Motor	Pwr Conv Outlet	Electric Heat Field Installed Kit 2EK045*				MCA[1] (Amps)	Min Fuse[2]/ Breaker[3] Size (Amps)	Max Fuse[2]/ Breaker[3] Size (Amps)	Min Discon-nect Rating[4]		MCA[1] w/Pwr Exh (Amps)	Min Fuse[2]/ Breaker[3] Size w/ Pwr Exh (Amps)	Max Fuse[2]/ Breaker[3] Size w/ Pwr Exh (Amps)	Min Discon-nect Rating[4]/ Pwr Exh	
		RLA	LRA	MCC	RLA	LRA	MCC					Model	kW	Stages	Amps				FLA	LRA				FLA	LRA
04 (3)	208-3-60	10.4	73	16				1.4	5.2	1.1	8.6	None	-	-	-	23.9	25	30	24	103	25	25	35	26	105
												10625	4.9	1	13.6	28.9	30	30	27	103	30.3	35	35	28	105
												11125	7.9	1	21.9	39.3	40	40	36	103	40.6	45	45	37	105
												11625	12	1	33.3	53.5	60	60	49	103	54.9	60	60	50	105
	230-3-60	10.4	73	16				1.4	5.2	1	8.6	None	-	-	-	23.9	25	30	24	106	24.9	25	35	26	108
												10625	6.5	1	15.6	31.4	35	35	29	106	32.6	35	35	30	108
												11125	10.5	1	25.3	43.5	45	45	40	106	44.8	45	45	41	108
												11625	16	1	38.5	60	60	60	55	106	61.3	70	70	56	108
	460-3-60	5.8	38	9				0.8	2.6	0.5	8.6	None	-	-	-	12.9	15	15	13	55	13.4	15	15	14	56
												10646	6	1	7.2	14.9	15	15	14	55	15.6	20	20	14	56
												11146	11.5	1	13.8	23.2	25	25	21	55	23.8	25	25	22	56
												11446	14	1	16.8	26.9	30	30	25	55	27.6	30	30	25	56
	575-3-60	3.8	36.5	6				0.6	2	0.4	8.6	None	-	-	-	9.1	15	15	9	50	9.5	15	15	10	51
												11058	9.2	1	8.9	15.8	20	20	15	50	16.3	20	20	15	51
												11458	13.8	1	13.3	21.3	25	25	20	50	21.8	25	25	20	51
05 (4)	208-3-60	13.7	83.1	21				1.4	7.5	1.1	8.6	None	-	-	-	30.3	35	40	31	139	31.4	35	45	32	142
												10625	4.9	1	13.6	31.8	35	40	31	139	33.1	35	45	32	142
												11125	7.9	1	21.9	42.1	45	45	39	139	43.5	45	45	40	142
												11625	12	1	33.3	56.4	60	60	52	139	57.8	60	60	53	142
	230-3-60	13.7	83.1	21				1.4	7.5	1	8.6	None	-	-	-	30.3	35	40	31	146	31.3	35	45	32	148
												10625	6.5	1	15.6	34.3	35	40	32	146	35.5	40	45	33	148
												11125	10.5	1	25.3	46.4	50	50	43	146	47.6	50	50	44	148
												11625	16	1	38.5	62.9	70	70	58	146	64.1	70	70	59	148
	460-3-60	6.2	41	10				0.8	3.4	0.5	8.6	None	-	-	-	14.2	15	20	14	73	14.7	15	20	15	74
												10646	6	1	7.2	15.9	20	20	15	73	16.6	20	20	15	74
												11146	11.5	1	13.8	24.2	25	25	22	73	24.8	25	25	23	74
												11446	14	1	16.8	27.9	30	30	26	73	28.6	30	30	26	74
	575-3-60	4.8	33	8				0.6	2.8	0.4	8.6	None	-	-	-	11.1	15	15	11	58	11.5	15	15	12	59
												11058	9.2	1	8.9	16.8	20	20	15	58	17.3	20	20	16	59
												11458	13.8	1	13.3	22.3	25	25	20	58	22.8	25	25	21	59
06 (5)	208-3-60	15.9	110	25				2.3	8.9	1.1	8.6	None	-	-	-	35.4	40	50	36	196	36.5	40	50	37	198
												10625	4.9	1	13.6	35.4	40	50	36	196	36.5	40	50	37	198
												11125	7.9	1	21.9	43.9	45	50	40	196	45.3	50	50	42	198
												11625	12	1	33.3	58.1	60	60	53	196	59.5	60	60	55	198
	230-3-60	15.9	110	25				2.3	8.2	1	8.6	None	-	-	-	34.7	35	50	35	198	35.7	40	50	36	201
												10625	6.5	1	15.6	35.1	40	50	35	198	36.4	40	50	36	201
												11125	10.5	1	25.3	47.3	50	50	43	198	48.5	50	50	45	201
												11625	16	1	38.5	63.8	70	70	59	198	65	70	70	60	201
	460-3-60	7.1	52	11				1.3	4.1	0.5	8.6	None	-	-	-	16.5	20	20	17	92	17	20	20	17	93
												11146	6	1	7.2	16.8	20	20	15	92	17.4	20	20	16	93
												11146	11.5	1	13.8	25.1	30	30	23	92	25.7	30	30	24	93
												11446	14	1	16.8	28.8	30	30	27	92	29.4	30	30	27	93
	575-3-60	5.1	39.5	8				1.1	3.2	0.4	8.6	None	-	-	-	12.4	15	15	13	70	12.8	15	15	13	71
												11458	13.8	1	13.3	22.8	25	25	21	70	23.3	25	25	21	71
												12358	23	1	22.1	33.8	35	35	31	70	34.3	35	35	32	71

ZY04-12 High Static Indoor Blower - With Powered Convenience Outlet (Continued)

Size (Tons)	Nominal Unit Voltage	Compressor 1			Compressor 2			OD Fan Motors (each)	Supply Blower Motor	Pwr Exh Motor	Pwr Conv Outlet	Electric Heat Field Installed Kit 2EK045*				MCA[1] (Amps)	Min Fuse[2]/ Breaker[3] Size (Amps)	Max Fuse[2]/ Breaker[3] Size (Amps)	Min Discon-nect Rating[4]		MCA[1] w/Pwr Exh (Amps)	Min Fuse[2]/ Breaker[3] Size w/ Pwr Exh (Amps)	Max Fuse[2]/ Breaker[3] Size w/ Pwr Exh (Amps)	Min Discon-nect Rating[4]/ Pwr Exh	
		RLA	LRA	MCC	RLA	LRA	MCC					Model	kW	Stages	Amps				FLA	LRA				FLA	LRA
07 (6)	208-3-60	19	123	30				2.3	10.2	1.1	8.6	None	-	-	-	42.9	45	60	44	210	45.1	50	60	46	220
												10725	4.9	1	13.6	42.9	45	60	44	210	45.1	50	60	46	220
												11725	12	1	33.3	59.8	60	60	55	210	62.5	70	70	58	220
												12525	18.6	1	51.6	82.6	90	90	76	210	85.4	90	90	79	220
	230-3-60	19	123	30				2.3	10.2	1	8.6	None	-	-	-	42.9	45	60	44	216	44.9	45	60	46	211
												10725	6.5	1	15.6	42.9	45	60	44	216	44.9	45	60	46	211
												11725	16	1	38.5	66.3	70	70	61	216	68.8	70	70	63	211
												12525	24.8	1	59.7	92.8	100	100	85	216	95.3	100	100	88	211
	460-3-60	9.7	62	15				1.3	4.8	0.5	8.6	None	-	-	-	21.7	25	30	22	110	22.7	25	30	23	107
												10746	6	1	7.2	21.7	25	30	16	110	22.7	25	30	17	107
												11746	16.5	1	19.8	33.4	35	35	31	110	34.7	35	35	32	107
												12646	25.5	1	30.7	47.1	50	50	43	110	48.3	50	50	44	107
	575-3-60	7.4	50	12				1.1	3.4	0.4	8.6	None	-	-	-	16.6	20	20	17	89	17.4	20	20	18	86
												11758	17	1	16.4	26.9	30	30	25	89	27.9	30	30	26	86
												12658	25.7	1	24.7	37.3	40	40	34	89	38.3	40	40	35	86
A7 (6)	208-3-60	17.6	136	27				2.3	10.2	1.1	8.6	None	-	-	-	41.1	45	50	42	213	43.3	45	50	45	218
												10725	4.9	1	13.6	41.1	45	50	42	213	43.3	45	50	45	218
												11725	12	1	33.3	59.8	60	60	55	213	62.5	70	70	58	218
												12525	18.6	1	51.6	82.6	90	90	76	213	85.4	90	90	79	218
	230-3-60	17.6	136	27				2.3	10.2	1	8.6	None	-	-	-	41.1	45	50	42	219	43.1	45	60	45	224
												10725	6.5	1	15.6	41.1	45	50	42	219	43.1	45	60	45	224
												11725	16	1	38.5	66.3	70	70	61	219	68.8	70	70	63	224
												12525	24.8	1	59.7	92.8	100	100	85	219	95.3	100	100	88	224
	460-3-60	8.5	66.1	13				1.3	4.8	0.5	8.6	None	-	-	-	20.2	25	25	21	109	21.2	25	25	22	111
												10746	6	1	7.2	20.2	25	25	16	109	21.2	25	25	17	111
												11746	16.5	1	19.8	33.4	35	35	31	109	34.7	35	35	32	111
												12646	25.5	1	30.7	47.1	50	50	43	109	48.3	50	50	44	111
	575-3-60	6.3	55.3	10				1.1	3.4	0.4	8.6	None	-	-	-	15.2	20	20	16	89	16	20	20	17	91
												11758	17	1	16.4	26.9	30	30	25	89	27.9	30	30	26	91
												12658	25.7	1	24.7	37.3	40	40	34	89	38.3	40	40	35	91
08 (7.5)	208-3-60	13.6	83.1	21	13.6	83.1	21	2.3	10.2	1.1	8.6	None	-	-	-	49.7	50	60	53	253	51.9	60	60	56	263
												11725	12	1	33.3	59.8	60	60	55	253	62.5	70	70	58	263
												12525	18.6	1	51.6	82.6	90	90	76	253	85.4	90	90	79	263
												13225	24	1	66.6	101.4	110	110	93	253	104.1	110	110	96	263
												14225	31.8	2	88.3	128.5	150	150	118	253	131.3	150	150	121	263
	230-3-60	13.6	83.1	21	13.6	83.1	21	2.3	10.2	1	8.6	None	-	-	-	49.7	50	60	53	260	51.7	60	60	56	254
												11725	16	1	38.5	66.3	70	70	61	260	68.8	70	70	63	254
												12525	24.8	1	59.7	92.8	100	100	85	260	95.3	100	100	88	254
												13225	32	1	77	114.4	125	125	105	260	116.9	125	125	108	254
												14225	42.4	2	102	145.6	150	150	134	260	148.1	150	150	136	254
	460-3-60	6.1	41	10	6.1	41	10	1.3	4.8	0.5	8.6	None	-	-	-	23.3	25	25	25	130	24.3	25	25	26	127
												11746	16.5	1	19.8	33.4	35	35	31	130	34.7	35	35	32	127
												12846	27.8	1	33.4	50.4	60	60	46	130	51.7	60	60	48	127
												13346	33	1	39.7	58.3	60	60	54	130	59.6	60	60	55	127
												14246	41.7	2	50.2	71.4	80	80	66	130	72.7	80	80	67	127
	575-3-60	4.2	33	7	4.2	33	7	1.1	3.4	0.4	8.6	None	-	-	-	16.8	20	20	18	105	17.6	20	20	19	102
												11758	17	1	16.4	26.9	30	30	25	105	27.9	30	30	26	102
												13458	34	1	32.7	47.3	50	50	43	105	48.3	50	50	44	102

ZY04-12 High Static Indoor Blower - With Powered Convenience Outlet (Continued)

Size (Tons)	Nominal Unit Voltage	Compressor 1			Compressor 2			OD Fan Motors (each)	Supply Blower Motor	Pwr Exh Motor	Pwr Conv Outlet	Electric Heat Field Installed Kit 2EK045*				MCA[1] (Amps)	Min Fuse[2]/ Breaker[3] Size (Amps)	Max Fuse[2]/ Breaker[3] Size (Amps)	Min Discon-nect Rating[4]		MCA[1] w/Pwr Exh (Amps)	Min Fuse[2]/ Breaker[3] Size w/ Pwr Exh (Amps)	Max Fuse[2]/ Breaker[3] Size w/ Pwr Exh (Amps)	Min Discon-nect Rating[4]/ Pwr Exh	
		RLA	LRA	MCC	RLA	LRA	MCC					Model	kW	Stages	Amps				FLA	LRA				FLA	LRA
09 (8.5)	208-3-60	13.7	83.1	21	13.7	83.1	21	2.3	10.2	1.1	8.6	None	-	-	-	49.9	50	60	53	253	52.1	60	60	56	263
												11725	12	1	33.3	59.8	60	60	55	253	62.5	70	70	58	263
												12525	18.6	1	51.6	82.6	90	90	76	253	85.4	90	90	79	263
												13225	24	1	66.6	101.4	110	110	93	253	104.1	110	110	96	263
												14225	31.8	2	88.3	128.5	150	150	118	253	131.3	150	150	121	263
	230-3-60	13.7	83.1	21	13.7	83.1	21	2.3	10.2	1	8.6	None	-	-	-	49.9	50	60	53	260	51.9	60	60	56	254
												11725	16	1	38.5	66.3	70	70	61	260	68.8	70	70	63	254
												12525	24.8	1	59.7	92.8	100	100	85	260	95.3	100	100	88	254
												13225	32	1	77	114.4	125	125	105	260	116.9	125	125	108	254
												14225	42.4	2	102	145.6	150	150	134	260	148.1	150	150	136	254
	460-3-60	6.2	41	10	6.2	41	10	1.3	4.8	0.5	8.6	None	-	-	-	23.6	25	25	25	130	24.6	25	25	26	127
												11746	16.5	1	19.8	33.4	35	35	31	130	34.7	35	35	32	127
												12846	27.8	1	33.4	50.4	60	60	46	130	51.7	60	60	48	127
												13346	33	1	39.7	58.3	60	60	54	130	59.6	60	60	55	127
												14246	41.7	2	50.2	71.4	80	80	66	130	72.7	80	80	67	127
	575-3-60	4.8	33	8	4.8	33	8	1.1	3.4	0.4	8.6	None	-	-	-	18.1	20	20	19	105	18.9	20	20	20	102
												11758	17	1	16.4	26.9	30	30	25	105	27.9	30	30	26	102
												13458	34	1	32.7	47.3	50	50	43	105	48.3	50	50	44	102
12 (10)	208-3-60	16	110	25	16	110	25	5.8	14.9	1.1	8.6	None	-	-	-	61	70	70	66	328	63.2	70	70	68	338
												11725	12	1	33.3	65.6	70	70	66	328	68.4	70	70	68	338
												12525	18.6	1	51.6	88.5	90	90	81	328	91.3	100	100	84	338
												13225	24	1	66.6	107.3	110	110	99	328	110	125	125	101	338
												14225	31.8	2	88.3	134.4	150	150	124	328	137.1	150	150	126	338
	230-3-60	16	110	25	16	110	25	5.2	15	1	8.6	None	-	-	-	60.5	70	70	65	326	62.5	70	70	67	331
												11725	16	1	38.5	72.3	80	80	66	326	74.8	80	80	69	331
												12525	24.8	1	59.7	98.8	100	100	91	326	101.3	110	110	93	331
												13225	32	1	77	120.4	125	125	111	326	122.9	125	125	113	331
												14225	42.4	2	102	151.6	175	175	139	326	154.1	175	175	142	331
	460-3-60	7.8	52	12	7.8	52	12	2.9	7.5	0.5	8.6	None	-	-	-	30.2	35	35	32	161	31.2	35	35	34	163
												11746	16.5	1	19.8	36.8	40	40	34	161	38.1	40	40	35	163
												12846	27.8	1	33.4	53.8	60	60	50	161	55.1	60	60	51	163
												13346	33	1	39.7	61.7	70	70	57	161	62.9	70	70	58	163
												14246	41.7	2	50.2	74.8	80	80	69	161	76.1	80	80	70	163
	575-3-60	5.7	38.9	9	5.7	38.9	9	2.2	5.6	0.4	8.6	None	-	-	-	22.3	25	25	24	126	23.1	25	25	25	128
												11758	17	1	16.4	29.7	30	30	27	126	30.7	35	35	28	128
												13458	34	1	32.7	50	50	50	46	126	51	60	60	47	128
With VFD																									
A7 (6)	208-3-60	17.6	136	27				2.3	9.9	1.1	8.6	None	-	-	-	40.8	45	50	42	222	43	45	50	44	227
												10725	4.9	1	13.6	40.8	45	50	42	222	43	45	50	44	227
												11725	12	1	33.3	59.4	60	60	55	222	62.1	70	70	57	227
												12525	18.6	1	51.6	82.3	90	90	76	222	85	90	90	78	227
	230-3-60	17.6	136	27				2.3	9.4	1	8.6	None	-	-	-	40.3	45	50	41	231	42.3	45	50	44	236
												10725	6.5	1	15.6	40.3	45	50	41	231	42.3	45	50	44	236
												11725	16	1	38.5	65.3	70	70	60	231	67.8	70	70	62	236
												12525	24.8	1	59.7	91.8	100	100	84	231	94.3	100	100	87	236
	460-3-60	8.5	66.1	13				1.3	4.7	0.5	8.6	None	-	-	-	20.1	25	25	21	114	21.1	25	25	22	117
												10746	6	1	7.2	20.1	25	25	16	114	21.1	25	25	17	117
												11746	16.5	1	19.8	33.3	35	35	31	114	34.6	35	35	32	117
												12646	25.5	1	30.7	46.9	50	50	43	114	48.2	50	50	44	117
	575-3-60	6.3	55.3	10				1.1	4.3	0.4	8.6	None	-	-	-	16.1	20	20	17	102	16.9	20	20	18	104
												11758	17	1	16.4	28	30	30	26	102	29	30	30	27	104
												12658	25.7	1	24.7	38.4	40	40	35	102	39.4	40	40	36	104

ZY04-12 High Static Indoor Blower - With Powered Convenience Outlet (Continued)

Size (Tons)	Nominal Unit Voltage	Compressor 1			Compressor 2			OD Fan Motors (each)	Supply Blower Motor	Pwr Exh Motor	Pwr Conv Outlet	Electric Heat Field Installed Kit 2EK045*				MCA[1] (Amps)	Min Fuse[2]/ Breaker[3] Size (Amps)	Max Fuse[2]/ Breaker[3] Size (Amps)	Min Discon-nect Rating[4]		MCA[1] w/Pwr Exh (Amps)	Min Fuse[2]/ Breaker[3] Size w/ Pwr Exh (Amps)	Max Fuse[2]/ Breaker[3] Size w/ Pwr Exh (Amps)	Min Discon-nect Rating[4]/ Pwr Exh	
		RLA	LRA	MCC	RLA	LRA	MCC					Model	kW	Stages	Amps				FLA	LRA				FLA	LRA
08 (7.5)	208-3-60	13.6	83.1	21	13.6	83.1	21	2.3	9.9	1.1	8.6	None	-	-	-	49.4	50	60	53	262	51.6	60	60	55	272
												11725	12	1	33.3	59.4	60	60	55	262	62.1	70	70	57	272
												12525	18.6	1	51.6	82.3	90	90	76	262	85	90	90	78	272
												13225	24	1	66.6	101	110	110	93	262	103.8	110	110	95	272
												14225	31.8	2	88.3	128.1	150	150	118	262	130.9	150	150	120	272
	230-3-60	13.6	83.1	21	13.6	83.1	21	2.3	9.4	1	8.6	None	-	-	-	48.9	50	60	52	271	50.9	60	60	55	266
												11725	16	1	38.5	65.3	70	70	60	271	67.8	70	70	62	266
												12525	24.8	1	59.7	91.8	100	100	84	271	94.3	100	100	87	266
												13225	32	1	77	113.4	125	125	104	271	115.9	125	125	107	266
												14225	42.4	2	102	144.6	150	150	133	271	147.1	150	150	135	266
	460-3-60	6.1	41	10	6.1	41	10	1.3	4.7	0.5	8.6	None	-	-	-	23.2	25	25	25	136	24.2	25	25	26	132
												11746	16.5	1	19.8	33.3	35	35	31	136	34.6	35	35	32	132
												12846	27.8	1	33.4	50.3	60	60	46	136	51.6	60	60	47	132
												13346	33	1	39.7	58.2	60	60	54	136	59.4	60	60	55	132
												14246	41.7	2	50.2	71.3	80	80	66	136	72.6	80	80	67	132
	575-3-60	4.2	33	7	4.2	33	7	1.1	4.3	0.4	8.6	None	-	-	-	17.7	20	20	19	117	18.5	20	20	20	114
												11758	17	1	16.4	28	30	30	26	117	29	30	30	27	114
												13458	34	1	32.7	48.4	50	50	45	117	49.4	50	50	45	114
09 (8.5)	208-3-60	13.7	83.1	21	13.7	83.1	21	2.3	9.9	1.1	8.6	None	-	-	-	49.6	50	60	53	262	51.8	60	60	56	272
												11725	12	1	33.3	59.4	60	60	55	262	62.1	70	70	57	272
												12525	18.6	1	51.6	82.3	90	90	76	262	85	90	90	78	272
												13225	24	1	66.6	101	110	110	93	262	103.8	110	110	95	272
												14225	31.8	2	88.3	128.1	150	150	118	262	130.9	150	150	120	272
	230-3-60	13.7	83.1	21	13.7	83.1	21	2.3	9.4	1	8.6	None	-	-	-	49.1	50	60	53	271	51.1	60	60	55	266
												11725	16	1	38.5	65.3	70	70	60	271	67.8	70	70	62	266
												12525	24.8	1	59.7	91.8	100	100	84	271	94.3	100	100	87	266
												13225	32	1	77	113.4	125	125	104	271	115.9	125	125	107	266
												14225	42.4	2	102	144.6	150	150	133	271	147.1	150	150	135	266
	460-3-60	6.2	41	10	6.2	41	10	1.3	4.7	0.5	8.6	None	-	-	-	23.5	25	25	25	136	24.5	25	25	26	132
												11746	16.5	1	19.8	33.3	35	35	31	136	34.6	35	35	32	132
												12846	27.8	1	33.4	50.3	60	60	46	136	51.6	60	60	47	132
												13346	33	1	39.7	58.2	60	60	54	136	59.4	60	60	55	132
												14246	41.7	2	50.2	71.3	80	80	66	136	72.6	80	80	67	132
	575-3-60	4.8	33	8	4.8	33	8	1.1	4.3	0.4	8.6	None	-	-	-	19	20	20	20	117	19.8	20	20	21	114
												11758	17	1	16.4	28	30	30	26	117	29	30	30	27	114
												13458	34	1	32.7	48.4	50	50	45	117	49.4	50	50	45	114
12 (10)	208-3-60	16	110	25	16	110	25	5.8	13.5	1.1	8.6	None	-	-	-	59.6	60	70	64	349	61.8	70	70	66	359
												11725	12	1	33.3	63.9	70	70	64	349	66.6	70	70	66	359
												12525	18.6	1	51.6	86.8	90	90	80	349	89.5	90	90	82	359
												13225	24	1	66.6	105.5	110	110	97	349	108.3	110	110	100	359
												14225	31.8	2	88.3	132.6	150	150	122	349	135.4	150	150	125	359
	230-3-60	16	110	25	16	110	25	5.2	13.4	1	8.6	None	-	-	-	58.9	60	70	63	345	60.9	70	70	65	350
												11725	16	1	38.5	70.3	80	80	65	345	72.8	80	80	67	350
												12525	24.8	1	59.7	96.8	100	100	89	345	99.3	100	100	91	350
												13225	32	1	77	118.4	125	125	109	345	120.9	125	125	111	350
												14225	42.4	2	102	149.6	150	150	138	345	152.1	175	175	140	350
	460-3-60	7.8	52	12	7.8	52	12	2.9	6.7	0.5	8.6	None	-	-	-	29.4	30	35	32	168	30.4	35	35	33	170
												11746	16.5	1	19.8	35.8	40	40	33	168	37.1	40	40	34	170
												12846	27.8	1	33.4	52.8	60	60	49	168	54.1	60	60	50	170
												13346	33	1	39.7	60.7	70	70	56	168	61.9	70	70	57	170
												14246	41.7	2	50.2	73.8	80	80	68	168	75.1	80	80	69	170
	575-3-60	5.7	38.9	9	5.7	38.9	9	2.2	5.4	0.4	8.6	None	-	-	-	22.1	25	25	24	131	22.9	25	25	25	133
												11758	17	1	16.4	29.4	30	30	27	131	30.4	35	35	28	133
												13458	34	1	32.7	49.8	50	50	46	131	50.8	60	60	47	133

1. Minimum Circuit Ampacity.
2. Dual Element, Time Delay Type.
3. HACR type per NEC.
4. Non-fused Disconnect, Verify on the unit nameplate that the disconnect is properly sized for the application. Units with field installed electric heat kits may exceed the factory installed disconnect amperage rating.

ZQ04-06 Standard Static Indoor Blower - Without Powered Convenience Outlet

Size (Tons)	Nominal Unit Voltage	Compressor 1			Compressor 2			OD Fan Motors (each)	Supply Blower Motor	Pwr Exh Motor	Pwr Conv Outlet	Electric Heat Field Installed Kit 2EK045*				MCA[1] (Amps)	Min Fuse[2]/ Breaker[3] Size (Amps)	Max Fuse[2]/ Breaker[3] Size (Amps)	Min Discon-nect Rating[4]		MCA[1] w/Pwr Exh (Amps)	Min Fuse[2]/ Breaker[3] Size w/ Pwr Exh (Amps)	Max Fuse[2]/ Breaker[3] Size w/ Pwr Exh (Amps)	Min Discon-nect Rating[4]/ Pwr Exh	
		RLA	LRA	MCC	RLA	LRA	MCC					Model	kW	Stages	Amps				FLA	LRA				FLA	LRA
04 (3)	208-1-60	15.4	83.9	24				1.4	6.6	1.5		None	-	-	-	27.3	30	40	27	89	28.8	30	40	29	93
												10625	4.9	1	23.6	37.8	40	40	35	89	39.6	40	40	36	93
												11125	7.9	1	38	55.8	60	60	51	89	57.6	60	60	53	93
	230-1-60	15.4	83.9	24				1.4	6	1.3		None	-	-	-	26.7	30	40	26	89	28	30	40	28	92
												10625	6.5	1	27.1	41.4	45	45	38	89	43	45	45	40	92
												11125	10.5	1	43.8	62.3	70	70	57	89	63.9	70	70	59	92
	208-3-60	10.4	73	16				1.4	6.6	1.1		None	-	-	-	21	25	30	21	78	22.1	25	30	22	81
												10625	4.9	1	13.6	25.3	30	30	23	78	26.6	30	30	24	81
												11125	7.9	1	21.9	35.6	40	40	33	78	37	40	40	34	81
												11625	12	1	33.3	49.9	50	50	46	78	51.3	60	60	47	81
	230-3-60	10.4	73	16				1.4	6	1		None	-	-	-	20.4	25	30	20	78	21.4	25	30	22	81
												10625	6.5	1	15.6	27	30	30	25	78	28.3	30	30	26	81
												11125	10.5	1	25.3	39.1	40	40	36	78	40.4	45	45	37	81
												11625	16	1	38.5	55.6	60	60	51	78	56.9	60	60	52	81
	460-3-60	5.8	38	9				0.8	3.2	0.5		None	-	-	-	11.3	15	15	11	42	11.8	15	15	12	43
												10646	6	1	7.2	13	15	15	12	42	13.6	15	15	13	43
												11146	11.5	1	13.8	21.3	25	25	20	42	21.9	25	25	20	43
												11446	14	1	16.8	25	25	25	23	42	25.6	30	30	24	43
	575-3-60	3.8	36.5	6				0.6	6	0.4		None	-	-	-	7.8	15	15	8	39	8.2	15	15	8	40
												11058	9.2	1	8.9	14.1	15	15	13	39	14.6	15	15	13	40
												11458	13.8	1	13.3	19.6	20	20	18	39	20.1	25	25	19	40
05 (4)	208-1-60	19.6	130	31				1.4	8.4	1.5		None	-	-	-	34.3	35	50	34	135	35.8	40	50	36	139
												10625	4.9	1	23.6	40	40	50	37	135	41.9	45	50	39	139
												11125	7.9	1	38	58	60	60	53	135	59.9	60	60	55	139
	230-1-60	19.6	130	31				1.4	7.6	1.3		None	-	-	-	33.5	35	50	33	135	34.8	35	50	34	138
												10625	6.5	1	27.1	43.4	45	50	40	135	45	45	50	41	138
												11125	10.5	1	43.8	64.3	70	70	59	135	65.9	70	70	61	138
	208-3-60	13.7	83.1	21				1.4	8.4	1.1		None	-	-	-	26.9	30	40	27	88	28	30	40	28	91
												10625	4.9	1	13.6	27.5	30	40	27	88	28.9	30	40	28	91
												11125	7.9	1	21.9	37.9	40	40	35	88	39.3	40	40	36	91
												11625	12	1	33.3	52.1	60	60	48	88	53.5	60	60	49	91
	230-3-60	13.7	83.1	21				1.4	7.6	1		None	-	-	-	26.1	30	35	26	88	27.1	30	40	27	91
												10625	6.5	1	15.6	29	30	35	27	88	30.3	35	40	28	91
												11125	10.5	1	25.3	41.1	45	45	38	88	42.4	45	45	39	91
												11625	16	1	38.5	57.6	60	60	53	88	58.9	60	60	54	91
	460-3-60	6.2	41	10				0.8	4	0.5		None	-	-	-	12.6	15	15	13	45	13.1	15	15	13	46
												10646	6	1	7.2	14	15	15	13	45	14.6	15	15	13	46
												11146	11.5	1	13.8	22.3	25	25	20	45	22.9	25	25	21	46
												11446	14	1	16.8	26	30	30	24	45	26.6	30	30	24	46
	575-3-60	4.8	33	8				0.6	7.6	0.4		None	-	-	-	9.6	15	15	10	35	10	15	15	10	36
												11058	9.2	1	8.9	14.9	15	15	14	35	15.4	20	20	14	36
												11458	13.8	1	13.3	20.4	25	25	19	35	20.9	25	25	19	36

ZQ04-06 Standard Static Indoor Blower - Without Powered Convenience Outlet (Continued)

Size (Tons)	Nominal Unit Voltage	Compressor 1			Compressor 2			OD Fan Motors (each)	Supply Blower Motor	Pwr Exh Motor	Pwr Conv Outlet	Electric Heat Field Installed Kit 2EK045*				MCA[1] (Amps)	Min Fuse[2]/ Breaker[3] Size (Amps)	Max Fuse[2]/ Breaker[3] Size (Amps)	Min Discon-nect Rating[4]		MCA[1] w/Pwr Exh (Amps)	Min Fuse[2]/ Breaker[3] Size w/ Pwr Exh (Amps)	Max Fuse[2]/ Breaker[3] Size w/ Pwr Exh (Amps)	Min Discon-nect Rating[4]/ Pwr Exh	
		RLA	LRA	MCC	RLA	LRA	MCC					Model	kW	Stages	Amps				FLA	LRA				FLA	LRA
06 (5)	208-1-60	24.4	144.2	38				2.3	8.4	1.5		None	-	-	-	41.2	45	60	40	151	42.7	45	60	42	154
												10625	4.9	1	23.6	41.2	45	60	40	151	42.7	45	60	42	154
												11125	7.9	1	38	58	60	60	53	151	59.9	60	60	55	154
	230-1-60	24.4	144.2	38				2.3	7.6	1.3		None	-	-	-	40.4	45	60	39	151	41.7	45	60	41	154
												10625	6.5	1	27.1	43.4	45	60	40	151	45	45	60	41	154
												11125	10.5	1	43.8	64.3	70	70	59	151	65.9	70	70	61	154
	208-3-60	16	110	25				2.3	8.4	1.1		None	-	-	-	30.7	35	45	31	117	31.8	35	45	32	119
												10625	4.9	1	13.6	30.7	35	45	31	117	31.8	35	45	32	119
												11125	7.9	1	21.9	37.9	40	45	35	117	39.3	40	45	36	119
												11625	12	1	33.3	52.1	60	60	48	117	53.5	60	60	49	119
	230-3-60	16	110	25				2.3	7.6	1		None	-	-	-	29.9	30	45	30	117	30.9	35	45	31	119
												10625	6.5	1	15.6	29.9	30	45	30	117	30.9	35	45	31	119
												11125	10.5	1	25.3	41.1	45	45	38	117	42.4	45	45	39	119
												11625	16	1	38.5	57.6	60	60	53	117	58.9	60	60	54	119
	460-3-60	7.8	52	12				1.3	4	0.5		None	-	-	-	15.1	20	20	15	57	15.6	20	20	16	58
												10646	6	1	7.2	15.1	20	20	13	57	15.6	20	20	13	58
												11146	11.5	1	13.8	22.3	25	25	20	57	22.9	25	25	21	58
												11446	14	1	16.8	26	30	30	24	57	26.6	30	30	24	58
	575-3-60	5.7	38.9	9				1.1	7.6	0.4		None	-	-	-	11.2	15	15	11	42	11.6	15	15	12	43
												11458	13.8	1	13.3	20.4	25	25	19	42	20.9	25	25	19	43
												12358	23	1	22.1	31.4	35	35	29	42	31.9	35	35	29	43

1. Minimum Circuit Ampacity.
2. Dual Element, Time Delay Type.
3. HACR type per NEC.
4. Non-fused Disconnect, Verify on the unit nameplate that the disconnect is properly sized for the application. Units with field installed electric heat kits may exceed the factory installed disconnect amperage rating.

ZQ04-06 Standard Static Indoor Blower - With Powered Convenience Outlet

Size (Tons)	Nominal Unit Voltage	Compressor 1			Compressor 2			OD Fan Motors (each)	Supply Blower Motor	Pwr Exh Motor	Pwr Conv Outlet	Electric Heat Field Installed Kit 2EK045*				MCA[1] (Amps)	Min Fuse[2]/ Breaker[3] Size (Amps)	Max Fuse[2]/ Breaker[3] Size (Amps)	Min Discon-nect Rating[4]		MCA[1] w/Pwr Exh (Amps)	Min Fuse[2]/ Breaker[3] Size w/ Pwr Exh (Amps)	Max Fuse[2]/ Breaker[3] Size w/ Pwr Exh (Amps)	Min Discon-nect Rating[4]/ Pwr Exh	
		RLA	LRA	MCC	RLA	LRA	MCC					Model	kW	Stages	Amps				FLA	LRA				FLA	LRA
04 (3)	208-1-60	15.4	83.9	24				1.4	6.6	1.5	8.6	None	-	-	-	31.6	35	45	32	94	33.1	35	45	34	97
												10625	4.9	1	23.6	43.1	45	45	40	94	45	45	45	41	97
												11125	7.9	1	38	61.1	70	70	56	94	63	70	70	58	97
	230-1-60	15.4	83.9	24				1.4	6	1.3	8.6	None	-	-	-	31	35	45	31	94	32.3	35	45	33	96
												10625	6.5	1	27.1	46.8	50	50	43	94	48.4	50	50	45	96
												11125	10.5	1	43.8	67.6	70	70	62	94	69.3	70	70	64	96
	208-3-60	10.4	73	16				1.4	6.6	1.1	8.6	None	-	-	-	25.3	30	35	26	83	26.4	30	35	27	85
												10625	4.9	1	13.6	30.6	35	35	28	83	32	35	35	29	85
												11125	7.9	1	21.9	41	45	45	38	83	42.4	45	45	39	85
												11625	12	1	33.3	55.3	60	60	51	83	56.6	60	60	52	85
	230-3-60	10.4	73	16				1.4	6	1	8.6	None	-	-	-	24.7	25	35	25	83	25.7	30	35	27	85
												10625	6.5	1	15.6	32.4	35	35	30	83	33.6	35	35	31	85
												11125	10.5	1	25.3	44.5	45	45	41	83	45.8	50	50	42	85
												11625	16	1	38.5	61	70	70	56	83	62.3	70	70	57	85
	460-3-60	5.8	38	9				0.8	3.2	0.5	8.6	None	-	-	-	13.5	15	15	14	44	14	15	15	14	45
												10646	6	1	7.2	15.7	20	20	14	44	16.3	20	20	15	45
												11146	11.5	1	13.8	23.9	25	25	22	44	24.6	25	25	23	45
												11446	14	1	16.8	27.7	30	30	25	44	28.3	30	30	26	45
	575-3-60	3.8	36.5	6				0.6	6	0.4	8.6	None	-	-	-	9.5	15	15	10	41	9.9	15	15	10	41
												11058	9.2	1	8.9	16.3	20	20	15	41	16.8	20	20	15	41
												11458	13.8	1	13.3	21.8	25	25	20	41	22.3	25	25	20	41
05 (4)	208-1-60	19.6	130	31				1.4	8.4	1.5	8.6	None	-	-	-	38.6	40	50	39	140	40.1	45	50	40	143
												10625	4.9	1	23.6	45.4	50	50	42	140	47.3	50	50	43	143
												11125	7.9	1	38	63.4	70	70	58	140	65.3	70	70	60	143
	230-1-60	19.6	130	31				1.4	7.6	1.3	8.6	None	-	-	-	37.8	40	50	38	140	39.1	40	50	39	143
												10625	6.5	1	27.1	48.8	50	50	45	140	50.4	60	60	46	143
												11125	10.5	1	43.8	69.6	70	70	64	140	71.3	80	80	66	143
	208-3-60	13.7	83.1	21				1.4	8.4	1.1	8.6	None	-	-	-	31.2	35	40	32	93	32.3	35	45	33	95
												10625	4.9	1	13.6	32.9	35	40	32	93	34.3	35	45	33	95
												11125	7.9	1	21.9	43.3	45	45	40	93	44.6	45	45	41	95
												11625	12	1	33.3	57.5	60	60	53	93	58.9	60	60	54	95
	230-3-60	13.7	83.1	21				1.4	7.6	1	8.6	None	-	-	-	30.4	35	40	31	93	31.4	35	45	32	95
												10625	6.5	1	15.6	34.4	35	40	32	93	35.6	40	45	33	95
												11125	10.5	1	25.3	46.5	50	50	43	93	47.8	50	50	44	95
												11625	16	1	38.5	63	70	70	58	93	64.3	70	70	59	95
	460-3-60	6.2	41	10				0.8	4	0.5	8.6	None	-	-	-	14.8	15	20	15	47	15.3	20	20	16	48
												10646	6	1	7.2	16.7	20	20	15	47	17.3	20	20	16	48
												11146	11.5	1	13.8	24.9	25	25	23	47	25.6	30	30	24	48
												11446	14	1	16.8	28.7	30	30	26	47	29.3	30	30	27	48
	575-3-60	4.8	33	8				0.6	7.6	0.4	8.6	None	-	-	-	11.4	15	15	12	37	11.8	15	15	12	38
												11058	9.2	1	8.9	17.1	20	20	16	37	17.6	20	20	16	38
												11458	13.8	1	13.3	22.6	25	25	21	37	23.1	25	25	21	38

ZQ04-06 Standard Static Indoor Blower - With Powered Convenience Outlet (Continued)

Size (Tons)	Nominal Unit Voltage	Compressor 1			Compressor 2			OD Fan Motors (each)	Supply Blower Motor	Pwr Exh Motor	Pwr Conv Outlet	Electric Heat Field Installed Kit 2EK045*				MCA[1] (Amps)	Min Fuse[2]/ Breaker[3] Size (Amps)	Max Fuse[2]/ Breaker[3] Size (Amps)	Min Discon-nect Rating[4]		MCA[1] w/Pwr Exh (Amps)	Min Fuse[2]/ Breaker[3] Size w/ Pwr Exh (Amps)	Max Fuse[2]/ Breaker[3] Size w/ Pwr Exh (Amps)	Min Discon-nect Rating[4]/ Pwr Exh	
		RLA	LRA	MCC	RLA	LRA	MCC					Model	kW	Stages	Amps				FLA	LRA				FLA	LRA
06 (5)	208-1-60	24.4	144.2	38				2.3	8.4	1.5	8.6	None	-	-	-	45.5	50	60	45	155	47	50	70	47	159
												10625	4.9	1	23.6	45.5	50	60	45	155	47.3	50	70	47	159
												11125	7.9	1	38	63.4	70	70	58	155	65.3	70	70	60	159
	230-1-60	24.4	144.2	38				2.3	7.6	1.3	8.6	None	-	-	-	44.7	45	60	44	156	46	50	70	46	158
												10625	6.5	1	27.1	48.8	50	60	45	156	50.4	60	70	46	158
												11125	10.5	1	43.8	69.6	70	70	64	156	71.3	80	80	66	158
	208-3-60	16	110	25				2.3	8.4	1.1	8.6	None	-	-	-	35	35	50	36	121	36.1	40	50	37	124
												10625	4.9	1	13.6	35	35	50	36	121	36.1	40	50	37	124
												11125	7.9	1	21.9	43.3	45	50	40	121	44.6	45	50	41	124
												11625	12	1	33.3	57.5	60	60	53	121	58.9	60	60	54	124
	230-3-60	16	110	25				2.3	7.6	1	8.6	None	-	-	-	34.2	35	50	35	121	35.2	40	50	36	124
												10625	6.5	1	15.6	34.4	35	50	35	121	35.6	40	50	36	124
												11125	10.5	1	25.3	46.5	50	50	43	121	47.8	50	50	44	124
												11625	16	1	38.5	63	70	70	58	121	64.3	70	70	59	124
	460-3-60	7.8	52	12				1.3	4	0.5	8.6	None	-	-	-	17.3	20	25	18	59	17.8	20	25	18	60
												10646	6	1	7.2	17.3	20	25	15	59	17.8	20	25	16	60
												11146	11.5	1	13.8	24.9	25	25	23	59	25.6	30	30	24	60
												11446	14	1	16.8	28.7	30	30	26	59	29.3	30	30	27	60
	575-3-60	5.7	38.9	9				1.1	7.6	0.4	8.6	None	-	-	-	13	15	15	13	44	13.4	15	15	14	45
												11458	13.8	1	13.3	22.6	25	25	21	44	23.1	25	25	21	45
												12358	23	1	22.1	33.6	35	35	31	44	34.1	35	35	31	45

1. Minimum Circuit Ampacity.
2. Dual Element, Time Delay Type.
3. HACR type per NEC.
4. Non-fused Disconnect, Verify on the unit nameplate that the disconnect is properly sized for the application. Units with field installed electric heat kits may exceed the factory installed disconnect amperage rating.

ZQ04-06 Medium Static Indoor Blower - Without Powered Convenience Outlet

Size (Tons)	Nominal Unit Voltage	Compressor 1			Compressor 2			OD Fan Motors (each)	Supply Blower Motor	Pwr Exh Motor	Pwr Conv Outlet	Electric Heat Field Installed Kit 2EK045*				MCA[1] (Amps)	Min Fuse[2]/ Breaker[3] Size (Amps)	Max Fuse[2]/ Breaker[3] Size (Amps)	Min Discon-nect Rating[4]		MCA[1] w/Pwr Exh (Amps)	Min Fuse[2]/ Breaker[3] Size w/ Pwr Exh (Amps)	Max Fuse[2]/ Breaker[3] Size w/ Pwr Exh (Amps)	Min Discon-nect Rating[4]/ Pwr Exh	
		RLA	LRA	MCC	RLA	LRA	MCC					Model	kW	Stages	Amps				FLA	LRA				FLA	LRA
04 (3)	208-1-60	15.4	83.9	24				1.4	7.6	1.5		None	-	-	-	28.3	30	40	28	120	29.8	30	45	30	124
												10625	4.9	1	23.6	39	40	40	36	120	40.9	45	45	38	124
												11125	7.9	1	38	57	60	60	52	120	58.9	60	60	54	124
	230-1-60	15.4	83.9	24				1.4	7	1.3		None	-	-	-	27.7	30	40	27	123	29	30	40	29	126
												10625	6.5	1	27.1	42.6	45	45	39	123	44.3	45	45	41	126
												11125	10.5	1	43.8	63.5	70	70	58	123	65.1	70	70	60	126
	208-3-60	10.4	73	16				1.4	5.2	1.1		None	-	-	-	19.6	20	30	20	99	20.7	25	30	21	101
												10625	4.9	1	13.6	23.5	25	30	22	99	24.9	25	30	23	101
												11125	7.9	1	21.9	33.9	35	35	31	99	35.3	40	40	32	101
												11625	12	1	33.3	48.1	50	50	44	99	49.5	50	50	46	101
	230-3-60	10.4	73	16				1.4	5.2	1		None	-	-	-	19.6	20	30	20	101	20.6	25	30	21	104
												10625	6.5	1	15.6	26	30	30	24	101	27.3	30	30	25	104
												11125	10.5	1	25.3	38.1	40	40	35	101	39.4	40	40	36	104
												11625	16	1	38.5	54.6	60	60	50	101	55.9	60	60	51	104
	460-3-60	5.8	38	9				0.8	2.6	0.5		None	-	-	-	10.7	15	15	11	52	11.2	15	15	11	54
												10646	6	1	7.2	12.3	15	15	11	52	12.9	15	15	12	54
												11146	11.5	1	13.8	20.5	25	25	19	52	21.1	25	25	19	54
												11446	14	1	16.8	24.3	25	25	22	52	24.9	25	25	23	54
	575-3-60	3.8	36.5	6				0.6	2	0.4		None	-	-	-	7.4	15	15	7	48	7.8	15	15	8	49
												11058	9.2	1	8.9	13.6	15	15	13	48	14.1	15	15	13	49
												11458	13.8	1	13.3	19.1	20	20	18	48	19.6	20	20	18	49
05 (4)	208-1-60	19.6	130	31				1.4	7.6	1.5		None	-	-	-	33.5	35	50	33	166	35	35	50	35	170
												10625	4.9	1	23.6	39	40	50	36	166	40.9	45	50	38	170
												11125	7.9	1	38	57	60	60	52	166	58.9	60	60	54	170
	230-1-60	19.6	130	31				1.4	7	1.3		None	-	-	-	32.9	35	50	32	169	34.2	35	50	34	172
												10625	6.5	1	27.1	42.6	45	50	39	169	44.3	45	50	41	172
												11125	10.5	1	43.8	63.5	70	70	58	169	65.1	70	70	60	172
	208-3-60	13.7	83.1	21				1.4	5.2	1.1		None	-	-	-	23.7	25	35	23	109	24.8	25	35	25	111
												10625	4.9	1	13.6	23.7	25	35	23	109	24.9	25	35	25	111
												11125	7.9	1	21.9	33.9	35	35	31	109	35.3	40	40	32	111
												11625	12	1	33.3	48.1	50	50	44	109	49.5	50	50	46	111
	230-3-60	13.7	83.1	21				1.4	5.2	1		None	-	-	-	23.7	25	35	23	111	24.7	25	35	24	114
												10625	6.5	1	15.6	26	30	35	24	111	27.3	30	35	25	114
												11125	10.5	1	25.3	38.1	40	40	35	111	39.4	40	40	36	114
												11625	16	1	38.5	54.6	60	60	50	111	55.9	60	60	51	114
	460-3-60	6.2	41	10				0.8	2.6	0.5		None	-	-	-	11.2	15	15	11	55	11.7	15	15	12	57
												10646	6	1	7.2	12.3	15	15	11	55	12.9	15	15	12	57
												11146	11.5	1	13.8	20.5	25	25	19	55	21.1	25	25	19	57
												11446	14	1	16.8	24.3	25	25	22	55	24.9	25	25	23	57
	575-3-60	4.8	33	8				0.6	2	0.4		None	-	-	-	8.6	15	15	9	45	9	15	15	9	45
												11058	9.2	1	8.9	13.6	15	15	13	45	14.1	15	15	13	45
												11458	13.8	1	13.3	19.1	20	20	18	45	19.6	20	20	18	45

ZQ04-06 Medium Static Indoor Blower - Without Powered Convenience Outlet (Continued)

Size (Tons)	Nominal Unit Voltage	Compressor 1			Compressor 2			OD Fan Motors (each)	Supply Blower Motor	Pwr Exh Motor	Pwr Conv Outlet	Electric Heat Field Installed Kit 2EK045*				MCA[1] (Amps)	Min Fuse[2]/ Breaker[3] Size (Amps)	Max Fuse[2]/ Breaker[3] Size (Amps)	Min Discon-nect Rating[4]		MCA[1] w/Pwr Exh (Amps)	Min Fuse[2]/ Breaker[3] Size w/ Pwr Exh (Amps)	Max Fuse[2]/ Breaker[3] Size w/ Pwr Exh (Amps)	Min Discon-nect Rating[4]/ Pwr Exh	
		RLA	LRA	MCC	RLA	LRA	MCC					Model	kW	Stages	Amps				FLA	LRA				FLA	LRA
06 (5)	208-1-60	24.4	144.2	38				2.3	7.6	1.5		None	-	-	-	40.4	45	60	39	182	41.9	45	60	41	185
												10625	4.9	1	23.6	40.4	45	60	39	182	41.9	45	60	41	185
												11125	7.9	1	38	57	60	60	52	182	58.9	60	60	54	185
	230-1-60	24.4	144.2	38				2.3	7	1.3		None	-	-	-	39.8	40	60	39	185	41.1	45	60	40	188
												10625	6.5	1	27.1	42.6	45	60	39	185	44.3	45	60	41	188
												11125	10.5	1	43.8	63.5	70	70	58	185	65.1	70	70	60	188
	208-3-60	16	110	25				2.3	5.2	1.1		None	-	-	-	27.5	30	40	27	137	28.6	30	40	28	140
												10625	4.9	1	13.6	27.5	30	40	27	137	28.6	30	40	28	140
												11125	7.9	1	21.9	33.9	35	40	31	137	35.3	40	40	32	140
												11625	12	1	33.3	48.1	50	50	44	137	49.5	50	50	46	140
	230-3-60	16	110	25				2.3	5.2	1		None	-	-	-	27.5	30	40	27	140	28.5	30	40	28	142
												10625	6.5	1	15.6	27.5	30	40	27	140	28.5	30	40	28	142
												11125	10.5	1	25.3	38.1	40	40	35	140	39.4	40	40	36	142
												11625	16	1	38.5	54.6	60	60	50	140	55.9	60	60	51	142
	460-3-60	7.8	52	12				1.3	2.6	0.5		None	-	-	-	13.7	15	20	13	67	14.2	15	20	14	69
												10646	6	1	7.2	13.7	15	20	11	67	14.2	15	20	12	69
												11146	11.5	1	13.8	20.5	25	25	19	67	21.1	25	25	19	69
												11446	14	1	16.8	24.3	25	25	22	67	24.9	25	25	23	69
	575-3-60	5.7	38.9	9				1.1	2	0.4		None	-	-	-	10.2	15	15	10	51	10.6	15	15	11	52
												11458	13.8	1	13.3	19.1	20	20	18	51	19.6	20	20	18	52
												12358	23	1	22.1	30.1	35	35	28	51	30.6	35	35	28	52

1. Minimum Circuit Ampacity.
2. Dual Element, Time Delay Type.
3. HACR type per NEC.
4. Non-fused Disconnect, Verify on the unit nameplate that the disconnect is properly sized for the application. Units with field installed electric heat kits may exceed the factory installed disconnect amperage rating.

ZQ04-06 Medium Static Indoor Blower - With Powered Convenience Outlet

Size (Tons)	Nominal Unit Voltage	Compressor 1			Compressor 2			OD Fan Motors (each)	Supply Blower Motor	Pwr Exh Motor	Pwr Conv Outlet	Electric Heat Field Installed Kit 2EK045*				MCA[1] (Amps)	Min Fuse[2]/ Breaker[3] Size (Amps)	Max Fuse[2]/ Breaker[3] Size (Amps)	Min Discon-nect Rating[4]		MCA[1] w/Pwr Exh (Amps)	Min Fuse[2]/ Breaker[3] Size w/ Pwr Exh (Amps)	Max Fuse[2]/ Breaker[3] Size w/ Pwr Exh (Amps)	Min Discon-nect Rating[4]/ Pwr Exh	
		RLA	LRA	MCC	RLA	LRA	MCC					Model	kW	Stages	Amps				FLA	LRA				FLA	LRA
04 (3)	208-1-60	15.4	83.9	24				1.4	7.6	1.5	8.6	None	-	-	-	32.6	35	45	33	125	34.1	35	45	35	128
												10625	4.9	1	23.6	44.4	45	45	41	125	46.3	50	50	43	128
												11125	7.9	1	38	62.4	70	70	57	125	64.3	70	70	59	128
	230-1-60	15.4	83.9	24				1.4	7	1.3	8.6	None	-	-	-	32	35	45	32	127	33.3	35	45	34	130
												10625	6.5	1	27.1	48	50	50	44	127	49.6	50	50	46	130
												11125	10.5	1	43.8	68.9	70	70	63	127	70.5	80	80	65	130
	208-3-60	10.4	73	16				1.4	5.2	1.1	8.6	None	-	-	-	23.9	25	30	24	103	25	25	35	26	106
												10625	4.9	1	13.6	28.9	30	30	27	103	30.3	35	35	28	106
												11125	7.9	1	21.9	39.3	40	40	36	103	40.6	45	45	37	106
												11625	12	1	33.3	53.5	60	60	49	103	54.9	60	60	50	106
	230-3-60	10.4	73	16				1.4	5.2	1	8.6	None	-	-	-	23.9	25	30	24	106	24.9	25	35	26	108
												10625	6.5	1	15.6	31.4	35	35	29	106	32.6	35	35	30	108
												11125	10.5	1	25.3	43.5	45	45	40	106	44.8	45	45	41	108
												11625	16	1	38.5	60	60	60	55	106	61.3	70	70	56	108
	460-3-60	5.8	38	9				0.8	2.6	0.5	8.6	None	-	-	-	12.9	15	15	13	55	13.4	15	15	14	56
												10646	6	1	7.2	14.9	15	15	14	55	15.6	20	20	14	56
												11146	11.5	1	13.8	23.2	25	25	21	55	23.8	25	25	22	56
												11446	14	1	16.8	26.9	30	30	25	55	27.6	30	30	25	56
	575-3-60	3.8	36.5	6				0.6	2	0.4	8.6	None	-	-	-	9.1	15	15	9	50	9.5	15	15	10	51
												11058	9.2	1	8.9	15.8	20	20	15	50	16.3	20	20	15	51
												11458	13.8	1	13.3	21.3	25	25	20	50	21.8	25	25	20	51
05 (4)	208-1-60	19.6	130	31				1.4	7.6	1.5	8.6	None	-	-	-	37.8	40	50	38	171	39.3	40	50	40	174
												10625	4.9	1	23.6	44.4	45	50	41	171	46.3	50	50	43	174
												11125	7.9	1	38	62.4	70	70	57	171	64.3	70	70	59	174
	230-1-60	19.6	130	31				1.4	7	1.3	8.6	None	-	-	-	37.2	40	50	37	173	38.5	40	50	39	176
												10625	6.5	1	27.1	48	50	50	44	173	49.6	50	50	46	176
												11125	10.5	1	43.8	68.9	70	70	63	173	70.5	80	80	65	176
	208-3-60	13.7	83.1	21				1.4	5.2	1.1	8.6	None	-	-	-	28	30	40	28	113	29.1	30	40	30	116
												10625	4.9	1	13.6	28.9	30	40	28	113	30.3	35	40	30	116
												11125	7.9	1	21.9	39.3	40	40	36	113	40.6	45	45	37	116
												11625	12	1	33.3	53.5	60	60	49	113	54.9	60	60	50	116
	230-3-60	13.7	83.1	21				1.4	5.2	1	8.6	None	-	-	-	28	30	40	28	116	29	30	40	29	118
												10625	6.5	1	15.6	31.4	35	40	29	116	32.6	35	40	30	118
												11125	10.5	1	25.3	43.5	45	45	40	116	44.8	45	45	41	118
												11625	16	1	38.5	60	60	60	55	116	61.3	70	70	56	118
	460-3-60	6.2	41	10				0.8	2.6	0.5	8.6	None	-	-	-	13.4	15	15	14	58	13.9	15	15	14	59
												10646	6	1	7.2	14.9	15	15	14	58	15.6	20	20	14	59
												11146	11.5	1	13.8	23.2	25	25	21	58	23.8	25	25	22	59
												11446	14	1	16.8	26.9	30	30	25	58	27.6	30	30	25	59
	575-3-60	4.8	33	8				0.6	2	0.4	8.6	None	-	-	-	10.3	15	15	10	46	10.7	15	15	11	47
												11058	9.2	1	8.9	15.8	20	20	15	46	16.3	20	20	15	47
												11458	13.8	1	13.3	21.3	25	25	20	46	21.8	25	25	20	47

ZQ04-06 Medium Static Indoor Blower - With Powered Convenience Outlet (Continued)

Size (Tons)	Nominal Unit Voltage	Compressor 1			Compressor 2			OD Fan Motors (each)	Supply Blower Motor	Pwr Exh Motor	Pwr Conv Outlet	Electric Heat Field Installed Kit 2EK045*				MCA[1] (Amps)	Min Fuse[2]/ Breaker[3] Size (Amps)	Max Fuse[2]/ Breaker[3] Size (Amps)	Min Discon-nect Rating[4]		MCA[1] w/Pwr Exh (Amps)	Min Fuse[2]/ Breaker[3] Size w/ Pwr Exh (Amps)	Max Fuse[2]/ Breaker[3] Size w/ Pwr Exh (Amps)	Min Discon-nect Rating[4]/ Pwr Exh	
		RLA	LRA	MCC	RLA	LRA	MCC					Model	kW	Stages	Amps				FLA	LRA				FLA	LRA
06 (5)	208-1-60	24.4	144.2	38				2.3	7.6	1.5	8.6	None	-	-	-	44.7	45	60	44	186	46.2	50	70	46	190
												10625	4.9	1	23.6	44.7	45	60	44	186	46.3	50	70	46	190
												11125	7.9	1	38	62.4	70	70	57	186	64.3	70	70	59	190
	230-1-60	24.4	144.2	38				2.3	7	1.3	8.6	None	-	-	-	44.1	45	60	44	189	45.4	50	60	45	192
												10625	6.5	1	27.1	48	50	60	44	189	49.6	50	60	46	192
												11125	10.5	1	43.8	68.9	70	70	63	189	70.5	80	80	65	192
	208-3-60	16	110	25				2.3	5.2	1.1	8.6	None	-	-	-	31.8	35	45	32	142	32.9	35	45	33	144
												10625	4.9	1	13.6	31.8	35	45	32	142	32.9	35	45	33	144
												11125	7.9	1	21.9	39.3	40	45	36	142	40.6	45	45	37	144
												11625	12	1	33.3	53.5	60	60	49	142	54.9	60	60	50	144
	230-3-60	16	110	25				2.3	5.2	1	8.6	None	-	-	-	31.8	35	45	32	144	32.8	35	45	33	147
												10625	6.5	1	15.6	31.8	35	45	32	144	32.8	35	45	33	147
												11125	10.5	1	25.3	43.5	45	45	40	144	44.8	45	45	41	147
												11625	16	1	38.5	60	60	60	55	144	61.3	70	70	56	147
	460-3-60	7.8	52	12				1.3	2.6	0.5	8.6	None	-	-	-	15.9	20	20	16	70	16.4	20	20	17	71
												10646	6	1	7.2	15.9	20	20	14	70	16.4	20	20	14	71
												11146	11.5	1	13.8	23.2	25	25	21	70	23.8	25	25	22	71
												11446	14	1	16.8	26.9	30	30	25	70	27.6	30	30	25	71
	575-3-60	5.7	38.9	9				1.1	2	0.4	8.6	None	-	-	-	11.9	15	15	12	53	12.3	15	15	13	54
												11458	13.8	1	13.3	21.3	25	25	20	53	21.8	25	25	20	54
												12358	23	1	22.1	32.3	35	35	30	53	32.8	35	35	30	54

1. Minimum Circuit Ampacity.
2. Dual Element, Time Delay Type.
3. HACR type per NEC.
4. Non-fused Disconnect, Verify on the unit nameplate that the disconnect is properly sized for the application. Units with field installed electric heat kits may exceed the factory installed disconnect amperage rating.

ZQ04-06 Hi Static Indoor Blower - Without Powered Convenience Outlet

Size (Tons)	Nominal Unit Voltage	Compressor 1			Compressor 2			OD Fan Motors (each)	Supply Blower Motor	Pwr Exh Motor	Pwr Conv Outlet	Electric Heat Field Installed Kit 2EK045*				MCA[1] (Amps)	Min Fuse[2]/ Breaker[3] Size (Amps)	Max Fuse[2]/ Breaker[3] Size (Amps)	Min Discon-nect Rating[4]		MCA[1] w/Pwr Exh (Amps)	Min Fuse[2]/ Breaker[3] Size w/ Pwr Exh (Amps)	Max Fuse[2]/ Breaker[3] Size w/ Pwr Exh (Amps)	Min Discon-nect Rating[4]/ Pwr Exh	
		RLA	LRA	MCC	RLA	LRA	MCC					Model	kW	Stages	Amps				FLA	LRA				FLA	LRA
04 (3)	208-3-60	10.4	73	16				1.4	5.2	1.1		None	-	-	-	19.6	20	30	20	99	20.7	25	30	21	101
												10625	4.9	1	13.6	23.5	25	30	22	99	24.9	25	30	23	101
												11125	7.9	1	21.9	33.9	35	35	31	99	35.3	40	40	32	101
												11625	12	1	33.3	48.1	50	50	44	99	49.5	50	50	46	101
	230-3-60	10.4	73	16				1.4	5.2	1		None	-	-	-	19.6	20	30	20	101	20.6	25	30	21	104
												10625	6.5	1	15.6	26	30	30	24	101	27.3	30	30	25	104
												11125	10.5	1	25.3	38.1	40	40	35	101	39.4	40	40	36	104
												11625	16	1	38.5	54.6	60	60	50	101	55.9	60	60	51	104
	460-3-60	5.8	38	9				0.8	2.6	0.5		None	-	-	-	10.7	15	15	11	52	11.2	15	15	11	54
												10646	6	1	7.2	12.3	15	15	11	52	12.9	15	15	12	54
												11146	11.5	1	13.8	20.5	25	25	19	52	21.1	25	25	19	54
												11446	14	1	16.8	24.3	25	25	22	52	24.9	25	25	23	54
	575-3-60	3.8	36.5	6				0.6	2	0.4		None	-	-	-	7.4	15	15	7	48	7.8	15	15	8	49
												11058	9.2	1	8.9	13.6	15	15	13	48	14.1	15	15	13	49
												11458	13.8	1	13.3	19.1	20	20	18	48	19.6	20	20	18	49
05 (4)	208-3-60	13.7	83.1	21				1.4	5.2	1.1		None	-	-	-	23.7	25	35	23	109	24.8	25	35	25	111
												10625	4.9	1	13.6	23.7	25	35	23	109	24.9	25	35	25	111
												11125	7.9	1	21.9	33.9	35	35	31	109	35.3	40	40	32	111
												11625	12	1	33.3	48.1	50	50	44	109	49.5	50	50	46	111
	230-3-60	13.7	83.1	21				1.4	5.2	1		None	-	-	-	23.7	25	35	23	111	24.7	25	35	24	114
												10625	6.5	1	15.6	26	30	35	24	111	27.3	30	35	25	114
												11125	10.5	1	25.3	38.1	40	40	35	111	39.4	40	40	36	114
												11625	16	1	38.5	54.6	60	60	50	111	55.9	60	60	51	114
	460-3-60	6.2	41	10				0.8	2.6	0.5		None	-	-	-	11.2	15	15	11	55	11.7	15	15	12	57
												10646	6	1	7.2	12.3	15	15	11	55	12.9	15	15	12	57
												11146	11.5	1	13.8	20.5	25	25	19	55	21.1	25	25	19	57
												11446	14	1	16.8	24.3	25	25	22	55	24.9	25	25	23	57
	575-3-60	4.8	33	8				0.6	2	0.4		None	-	-	-	8.6	15	15	9	45	9	15	15	9	45
												11058	9.2	1	8.9	13.6	15	15	13	45	14.1	15	15	13	45
												11458	13.8	1	13.3	19.1	20	20	18	45	19.6	20	20	18	45
06 (5)	208-3-60	16	110	25				2.3	7.5	1.1		None	-	-	-	29.8	30	45	30	163	30.9	35	45	31	166
												10625	4.9	1	13.6	29.8	30	45	30	163	30.9	35	45	31	166
												11125	7.9	1	21.9	36.8	40	45	34	163	38.1	40	45	35	166
												11625	12	1	33.3	51	60	60	47	163	52.4	60	60	48	166
	230-3-60	16	110	25				2.3	7.5	1		None	-	-	-	29.8	30	45	30	170	30.8	35	45	31	172
												10625	6.5	1	15.6	29.8	30	45	30	170	30.8	35	45	31	172
												11125	10.5	1	25.3	41	45	45	38	170	42.3	45	45	39	172
												11625	16	1	38.5	57.5	60	60	53	170	58.8	60	60	54	172
	460-3-60	7.8	52	12				1.3	3.4	0.5		None	-	-	-	14.5	15	20	14	82	15	15	20	15	84
												10646	6	1	7.2	14.5	15	20	12	82	15	15	20	13	84
												11146	11.5	1	13.8	21.5	25	25	20	82	22.1	25	25	20	84
												11446	14	1	16.8	25.3	30	30	23	82	25.9	30	30	24	84
	575-3-60	5.7	38.9	9				1.1	2.8	0.4		None	-	-	-	11	15	15	11	63	11.4	15	15	12	64
												11458	13.8	1	13.3	20.1	25	25	19	63	20.6	25	25	19	64
												12358	23	1	22.1	31.1	35	35	29	63	31.6	35	35	29	64

1. Minimum Circuit Ampacity.
2. Dual Element, Time Delay Type.
3. HACR type per NEC.
4. Non-fused Disconnect, Verify on the unit nameplate that the disconnect is properly sized for the application. Units with field installed electric heat kits may exceed the factory installed disconnect amperage rating.

ZQ04-06 Hi Static Indoor Blower - With Powered Convenience Outlet

Size (Tons)	Nominal Unit Voltage	Compressor 1			Compressor 2			OD Fan Motors (each)	Supply Blower Motor	Pwr Exh Motor	Pwr Conv Outlet	Electric Heat Field Installed Kit 2EK045*				MCA[1] (Amps)	Min Fuse[2]/ Breaker[3] Size (Amps)	Max Fuse[2]/ Breaker[3] Size (Amps)	Min Discon-nect Rating[4]		MCA[1] w/Pwr Exh (Amps)	Min Fuse[2]/ Breaker[3] Size w/ Pwr Exh (Amps)	Max Fuse[2]/ Breaker[3] Size w/ Pwr Exh (Amps)	Min Discon-nect Rating[4]/ Pwr Exh	
		RLA	LRA	MCC	RLA	LRA	MCC					Model	kW	Stages	Amps				FLA	LRA				FLA	LRA
04 (3)	208-3-60	10.4	73	16				1.4	5.2	1.1	8.6	None	-	-	-	23.9	25	30	24	103	25	25	35	26	106
												10625	4.9	1	13.6	28.9	30	30	27	103	30.3	35	35	28	106
												11125	7.9	1	21.9	39.3	40	40	36	103	40.6	45	45	37	106
												11625	12	1	33.3	53.5	60	60	49	103	54.9	60	60	50	106
	230-3-60	10.4	73	16				1.4	5.2	1	8.6	None	-	-	-	23.9	25	30	24	106	24.9	25	35	26	108
												10625	6.5	1	15.6	31.4	35	35	29	106	32.6	35	35	30	108
												11125	10.5	1	25.3	43.5	45	45	40	106	44.8	45	45	41	108
												11625	16	1	38.5	60	60	60	55	106	61.3	70	70	56	108
	460-3-60	5.8	38	9				0.8	2.6	0.5	8.6	None	-	-	-	12.9	15	15	13	55	13.4	15	15	14	56
												10646	6	1	7.2	14.9	15	15	14	55	15.6	20	20	14	56
												11146	11.5	1	13.8	23.2	25	25	21	55	23.8	25	25	22	56
												11446	14	1	16.8	26.9	30	30	25	55	27.6	30	30	25	56
	575-3-60	3.8	36.5	6				0.6	2	0.4	8.6	None	-	-	-	9.1	15	15	9	50	9.5	15	15	10	51
												11058	9.2	1	8.9	15.8	20	20	15	50	16.3	20	20	15	51
												11458	13.8	1	13.3	21.3	25	25	20	50	21.8	25	25	20	51
05 (4)	208-3-60	13.7	83.1	21				1.4	5.2	1.1	8.6	None	-	-	-	28	30	40	28	113	29.1	30	40	30	116
												10625	4.9	1	13.6	28.9	30	40	28	113	30.3	35	40	30	116
												11125	7.9	1	21.9	39.3	40	40	36	113	40.6	45	45	37	116
												11625	12	1	33.3	53.5	60	60	49	113	54.9	60	60	50	116
	230-3-60	13.7	83.1	21				1.4	5.2	1	8.6	None	-	-	-	28	30	40	28	116	29	30	40	29	118
												10625	6.5	1	15.6	31.4	35	40	29	116	32.6	35	40	30	118
												11125	10.5	1	25.3	43.5	45	45	40	116	44.8	45	45	41	118
												11625	16	1	38.5	60	60	60	55	116	61.3	70	70	56	118
	460-3-60	6.2	41	10				0.8	2.6	0.5	8.6	None	-	-	-	13.4	15	15	14	58	13.9	15	15	14	59
												10646	6	1	7.2	14.9	15	15	14	58	15.6	20	20	14	59
												11146	11.5	1	13.8	23.2	25	25	21	58	23.8	25	25	22	59
												11446	14	1	16.8	26.9	30	30	25	58	27.6	30	30	25	59
	575-3-60	4.8	33	8				0.6	2	0.4	8.6	None	-	-	-	10.3	15	15	10	46	10.7	15	15	11	47
												11058	9.2	1	8.9	15.8	20	20	15	46	16.3	20	20	15	47
												11458	13.8	1	13.3	21.3	25	25	20	46	21.8	25	25	20	47
06 (5)	208-3-60	16	110	25				2.3	7.5	1.1	8.6	None	-	-	-	34.1	35	50	35	168	35.2	40	50	36	170
												10625	4.9	1	13.6	34.1	35	50	35	168	35.2	40	50	36	170
												11125	7.9	1	21.9	42.1	45	50	39	168	43.5	45	50	40	170
												11625	12	1	33.3	56.4	60	60	52	168	57.8	60	60	53	170
	230-3-60	16	110	25				2.3	7.5	1	8.6	None	-	-	-	34.1	35	50	35	174	35.1	40	50	36	177
												10625	6.5	1	15.6	34.3	35	50	35	174	35.5	40	50	36	177
												11125	10.5	1	25.3	46.4	50	50	43	174	47.6	50	50	44	177
												11625	16	1	38.5	62.9	70	70	58	174	64.1	70	70	59	177
	460-3-60	7.8	52	12				1.3	3.4	0.5	8.6	None	-	-	-	16.7	20	20	17	85	17.2	20	20	17	86
												10646	6	1	7.2	16.7	20	20	15	85	17.2	20	20	15	86
												11146	11.5	1	13.8	24.2	25	25	22	85	24.8	25	25	23	86
												11446	14	1	16.8	27.9	30	30	26	85	28.6	30	30	26	86
	575-3-60	5.7	38.9	9				1.1	2.8	0.4	8.6	None	-	-	-	12.7	15	15	13	65	13.1	15	15	13	66
												11458	13.8	1	13.3	22.3	25	25	20	65	22.8	25	25	21	66
												12358	23	1	22.1	33.3	35	35	31	65	33.8	35	35	31	66

1. Minimum Circuit Ampacity.
2. Dual Element, Time Delay Type.
3. HACR type per NEC.
4. Non-fused Disconnect, Verify on the unit nameplate that the disconnect is properly sized for the application. Units with field installed electric heat kits may exceed the factory installed disconnect amperage rating.

ZL08-14 Standard Indoor Blower - Without Powered Convenience Outlet

Size (Tons)	Nominal Unit Voltage	Compressor 1			Compressor 2			OD Fan Motors (each)	Supply Blower Motor	Pwr Exh Motor	Pwr Conv Outlet	Electric Heat Field Installed Kit 2EK045*				MCA[1] (Amps)	Min Fuse[2]/ Breaker[3] Size (Amps)	Max Fuse[2]/ Breaker[3] Size (Amps)	Min Disconnect Rating[4]		MCA[1] w/Pwr Exh (Amps)	Min Fuse[2]/ Breaker[3] Size w/ Pwr Exh (Amps)	Max Fuse[2]/ Breaker[3] Size w/ Pwr Exh (Amps)	Min Disconnect Rating[4]/ Pwr Exh	
		RLA	LRA	MCC	RLA	LRA	MCC					Model	kW	Stages	Amps				FLA	LRA				FLA	LRA
With VFD																									
08 (7.5)	208-3-60	14	83.1	22	13.5	88	21	2.3	7	1.1		None	-	-	-	42.6	45	50	45	241	44.8	45	50	47	246
												11725	12	1	33.3	50.4	60	60	46	241	53.1	60	60	49	246
												12525	18.6	1	51.6	73.3	80	80	67	241	76	80	80	70	246
												13225	24	1	66.6	92	100	100	85	241	94.8	100	100	87	246
												14225	31.8	2	88.3	119.1	125	125	110	241	121.9	125	125	112	246
	230-3-60	14	83.1	22	13.5	88	21	2.3	7.2	1		None	-	-	-	42.8	45	50	45	243	44.8	45	50	47	248
												11725	16	1	38.5	57.1	60	60	53	243	59.6	60	60	55	248
												12525	24.8	1	59.7	83.6	90	90	77	243	86.1	90	90	79	248
												13225	32	1	77	105.3	110	110	97	243	107.8	110	110	99	248
												14225	42.4	2	102	136.5	150	150	126	243	139	150	150	128	248
	460-3-60	6.4	41	10	6	44	9	1.3	3.6	0.5		None	-	-	-	20.2	25	25	21	122	21.2	25	25	23	124
												11746	16.5	1	19.8	29.3	30	30	27	122	30.5	35	35	28	124
												12846	27.8	1	33.4	46.3	50	50	43	122	47.5	50	50	44	124
												13346	33	1	39.7	54.1	60	60	50	122	55.4	60	60	51	124
												14246	41.7	2	50.2	67.3	70	70	62	122	68.5	70	70	63	124
	575-3-60	4.6	33	7	4.9	34	8	1.1	2.5	0.4		None	-	-	-	15.4	20	20	16	89	16.2	20	20	17	91
												11758	17	1	16.4	23.6	25	25	22	89	24.6	25	25	23	91
												13458	34	1	32.7	44	45	45	40	89	45	45	45	41	91
09 (8.5)	208-3-60	14	83.1	22	13.7	83.1	21	2.3	7	1.1		None	-	-	-	42.8	45	50	45	236	45	45	50	48	241
												11725	12	1	33.3	50.4	60	60	46	236	53.1	60	60	49	241
												12525	18.6	1	51.6	73.3	80	80	67	236	76	80	80	70	241
												13225	24	1	66.6	92	100	100	85	236	94.8	100	100	87	241
												14225	31.8	2	88.3	119.1	125	125	110	236	121.9	125	125	112	241
	230-3-60	14	83.1	22	13.7	83.1	21	2.3	7.2	1		None	-	-	-	43	45	50	45	238	45	45	50	48	243
												11725	16	1	38.5	57.1	60	60	53	238	59.6	60	60	55	243
												12525	24.8	1	59.7	83.6	90	90	77	238	86.1	90	90	79	243
												13225	32	1	77	105.3	110	110	97	238	107.8	110	110	99	243
												14225	42.4	2	102	136.5	150	150	126	238	139	150	150	128	243
	460-3-60	6.4	41	10	6.2	41	10	1.3	3.6	0.5		None	-	-	-	20.4	25	25	22	119	21.4	25	25	23	121
												11746	16.5	1	19.8	29.3	30	30	27	119	30.5	35	35	28	121
												12846	27.8	1	33.4	46.3	50	50	43	119	47.5	50	50	44	121
												13346	33	1	39.7	54.1	60	60	50	119	55.4	60	60	51	121
												14246	41.7	2	50.2	67.3	70	70	62	119	68.5	70	70	63	121
	575-3-60	4.6	33	7	4.8	33	8	1.1	2.5	0.4		None	-	-	-	15.3	20	20	16	88	16.1	20	20	17	90
												11758	17	1	16.4	23.6	25	25	22	88	24.6	25	25	23	90
												13458	34	1	32.7	44	45	45	40	88	45	45	45	41	90
12 (10)	208-3-60	16.5	110	26	16	110	25	5.8	7	1.1		None	-	-	-	49.4	50	60	52	302	51.6	60	60	55	307
												11725	12	1	33.3	50.4	60	60	52	302	53.1	60	60	55	307
												12525	18.6	1	51.6	73.3	80	80	67	302	76	80	80	70	307
												13225	24	1	66.6	92	100	100	85	302	94.8	100	100	87	307
												14225	31.8	2	88.3	119.1	125	125	110	302	121.9	125	125	112	307
	230-3-60	16.5	110	26	16	110	25	5.2	7.2	1		None	-	-	-	49	50	60	52	301	51	60	60	54	305
												11725	16	1	38.5	57.1	60	60	53	301	59.6	60	60	55	305
												12525	24.8	1	59.7	83.6	90	90	77	301	86.1	90	90	79	305
												13225	32	1	77	105.3	110	110	97	301	107.8	110	110	99	305
												14225	42.4	2	102	136.5	150	150	126	301	139	150	150	128	305
	460-3-60	7.2	52	11	7.8	52	12	2.9	3.6	0.5		None	-	-	-	23.5	25	30	25	146	24.5	25	30	26	148
												11746	16.5	1	19.8	29.3	30	30	27	146	30.5	35	35	28	148
												12846	27.8	1	33.4	46.3	50	50	43	146	47.5	50	50	44	148
												13346	33	1	39.7	54.1	60	60	50	146	55.4	60	60	51	148
												14246	41.7	2	50.2	67.3	70	70	62	146	68.5	70	70	63	148
	575-3-60	5.7	43.8	9	5.7	38.9	9	2.2	2.5	0.4		None	-	-	-	17.5	20	20	19	112	18.3	20	20	19	114
												11758	17	1	16.4	23.6	25	25	22	112	24.6	25	25	23	114
												13458	34	1	32.7	44	45	45	40	112	45	45	45	41	114

ZL08-14 Standard Indoor Blower - Without Powered Convenience Outlet

Size (Tons)	Nominal Unit Voltage	Compressor 1			Compressor 2			OD Fan Motors (each)	Supply Blower Motor	Pwr Exh Motor	Pwr Conv Outlet	Electric Heat Field Installed Kit 2EK045*				MCA[1] (Amps)	Min Fuse[2]/ Breaker[3] Size (Amps)	Max Fuse[2]/ Breaker[3] Size (Amps)	Min Disconnect Rating[4]		MCA[1] w/Pwr Exh (Amps)	Min Fuse[2]/ Breaker[3] Size w/ Pwr Exh (Amps)	Max Fuse[2]/ Breaker[3] Size w/ Pwr Exh (Amps)	Min Disconnect Rating[4]/ Pwr Exh	
		RLA	LRA	MCC	RLA	LRA	MCC					Model	kW	Stages	Amps				FLA	LRA				FLA	LRA
14 (12.5)	208-3-60	18.6	149	29	19.6	136	31	5.8	8.9	0		None	-	-	-	57.8	60	70	61	384	57.8	60	70	61	384
												11725	12	1	33.3	57.8	60	70	61	384	57.8	60	70	61	384
												12525	18.6	1	51.6	75.6	80	80	70	384	75.6	80	80	70	384
												13225	24	1	66.6	94.4	100	100	87	384	94.4	100	100	87	384
												14225	31.8	2	88.3	121.5	125	125	112	384	121.5	125	125	112	384
	230-3-60	18.6	149	29	19.6	136	31	5.2	8.2	0		None	-	-	-	56.5	60	70	59	383	56.5	60	70	59	383
												11725	16	1	38.5	58.4	60	70	59	383	58.4	60	70	59	383
												12525	24.8	1	59.7	84.9	90	90	78	383	84.9	90	90	78	383
												13225	32	1	77	106.5	110	110	98	383	106.5	110	110	98	383
												14225	42.4	2	102	137.8	150	150	127	383	137.8	150	150	127	383
	460-3-60	9	60.9	14	8.2	66.1	13	2.9	4.1	0		None	-	-	-	26.5	30	35	28	173	26.5	30	35	28	173
												11746	16.5	1	19.8	29.9	30	35	27	173	29.9	30	35	27	173
												12846	27.8	1	33.4	46.9	50	50	43	173	46.9	50	50	43	173
												13346	33	1	39.7	54.8	60	60	50	173	54.8	60	60	50	173
												14246	41.7	2	50.2	67.9	70	70	62	173	67.9	70	70	62	173
	575-3-60	7.1	56	11	6.6	55.3	10	2.2	3.2	0		None	-	-	-	20.9	25	25	22	149	20.9	25	25	22	149
												11758	17	1	16.4	24.5	25	25	23	149	24.5	25	25	23	149
												13458	34	1	32.7	44.9	45	45	41	149	44.9	45	45	41	149

1. Minimum Circuit Ampacity.
2. Dual Element, Time Delay Type.
3. HACR type per NEC.
4. Non-fused Disconnect, Verify on the unit nameplate that the disconnect is properly sized for the application. Units with field installed electric heat kits may exceed the factory installed disconnect amperage rating.

ZL08-14 Standard Indoor Blower - With Powered Convenience Outlet

Size (Tons)	Nominal Unit Voltage	Compressor 1			Compressor 2			OD Fan Motors (each)	Supply Blower Motor	Pwr Exh Motor	Pwr Conv Outlet	Electric Heat Field Installed Kit 2EK045*				MCA[1] (Amps)	Min Fuse[2]/ Breaker[3] Size (Amps)	Max Fuse[2]/ Breaker[3] Size (Amps)	Min Disconnect Rating[4]		MCA[1] w/Pwr Exh (Amps)	Min Fuse[2]/ Breaker[3] Size w/ Pwr Exh (Amps)	Max Fuse[2]/ Breaker[3] Size w/ Pwr Exh (Amps)	Min Disconnect Rating[4]/ Pwr Exh	
		RLA	LRA	MCC	RLA	LRA	MCC					Model	kW	Stages	Amps				FLA	LRA				FLA	LRA
With VFD																									
08 (7.5)	208-3-60	14	83.1	22	13.5	88	21	2.3	7	1.1	8.6	None	-	-	-	46.9	50	60	50	245	49.1	50	60	52	250
												11725	12	1	33.3	55.8	60	60	51	245	58.5	60	60	54	250
												12525	18.6	1	51.6	78.6	80	80	72	245	81.4	90	90	75	250
												13225	24	1	66.6	97.4	100	100	90	245	100.1	110	110	92	250
												14225	31.8	2	88.3	124.5	125	125	115	245	127.3	150	150	117	250
	230-3-60	14	83.1	22	13.5	88	21	2.3	7.2	1	8.6	None	-	-	-	47.1	50	60	50	247	49.1	50	60	52	252
												11725	16	1	38.5	62.5	70	70	58	247	65	70	70	60	252
												12525	24.8	1	59.7	89	90	90	82	247	91.5	100	100	84	252
												13225	32	1	77	110.6	125	125	102	247	113.1	125	125	104	252
												14225	42.4	2	102	141.9	150	150	131	247	144.4	150	150	133	252
	460-3-60	6.4	41	10	6	44	9	1.3	3.6	0.5	8.6	None	-	-	-	22.4	25	25	24	124	23.4	25	25	25	126
												11746	16.5	1	19.8	31.9	35	35	29	124	33.2	35	35	31	126
												12846	27.8	1	33.4	48.9	50	50	45	124	50.2	60	60	46	126
												13346	33	1	39.7	56.8	60	60	52	124	58.1	60	60	53	126
												14246	41.7	2	50.2	69.9	70	70	64	124	71.2	80	80	65	126
	575-3-60	4.6	33	7	4.9	34	8	1.1	2.5	0.4	8.6	None	-	-	-	17.1	20	20	18	91	17.9	20	20	19	93
												11758	17	1	16.4	25.8	30	30	24	91	26.8	30	30	25	93
												13458	34	1	32.7	46.2	50	50	42	91	47.2	50	50	43	93
09 (8.5)	208-3-60	14	83.1	22	13.7	83.1	21	2.3	7	1.1	8.6	None	-	-	-	47.1	50	60	50	240	49.3	50	60	53	245
												11725	12	1	33.3	55.8	60	60	51	240	58.5	60	60	54	245
												12525	18.6	1	51.6	78.6	80	80	72	240	81.4	90	90	75	245
												13225	24	1	66.6	97.4	100	100	90	240	100.1	110	110	92	245
												14225	31.8	2	88.3	124.5	125	125	115	240	127.3	150	150	117	245
	230-3-60	14	83.1	22	13.7	83.1	21	2.3	7.2	1	8.6	None	-	-	-	47.3	50	60	50	242	49.3	50	60	53	247
												11725	16	1	38.5	62.5	70	70	58	242	65	70	70	60	247
												12525	24.8	1	59.7	89	90	90	82	242	91.5	100	100	84	247
												13225	32	1	77	110.6	125	125	102	242	113.1	125	125	104	247
												14225	42.4	2	102	141.9	150	150	131	242	144.4	150	150	133	247
	460-3-60	6.4	41	10	6.2	41	10	1.3	3.6	0.5	8.6	None	-	-	-	22.6	25	25	24	121	23.6	25	25	25	123
												11746	16.5	1	19.8	31.9	35	35	29	121	33.2	35	35	31	123
												12846	27.8	1	33.4	48.9	50	50	45	121	50.2	60	60	46	123
												13346	33	1	39.7	56.8	60	60	52	121	58.1	60	60	53	123
												14246	41.7	2	50.2	69.9	70	70	64	121	71.2	80	80	65	123
	575-3-60	4.6	33	7	4.8	33	8	1.1	2.5	0.4	8.6	None	-	-	-	17	20	20	18	90	17.8	20	20	19	92
												11758	17	1	16.4	25.8	30	30	24	90	26.8	30	30	25	92
												13458	34	1	32.7	46.2	50	50	42	90	47.2	50	50	43	92
12 (10)	208-3-60	16.5	110	26	16	110	25	5.8	7	1.1	8.6	None	-	-	-	53.7	60	70	57	306	55.9	60	70	60	311
												11725	12	1	33.3	55.8	60	70	57	306	58.5	60	70	60	311
												12525	18.6	1	51.6	78.6	80	80	72	306	81.4	90	90	75	311
												13225	24	1	66.6	97.4	100	100	90	306	100.1	110	110	92	311
												14225	31.8	2	88.3	124.5	125	125	115	306	127.3	150	150	117	311
	230-3-60	16.5	110	26	16	110	25	5.2	7.2	1	8.6	None	-	-	-	53.3	60	60	57	305	55.3	60	70	59	310
												11725	16	1	38.5	62.5	70	70	58	305	65	70	70	60	310
												12525	24.8	1	59.7	89	90	90	82	305	91.5	100	100	84	310
												13225	32	1	77	110.6	125	125	102	305	113.1	125	125	104	310
												14225	42.4	2	102	141.9	150	150	131	305	144.4	150	150	133	310
	460-3-60	7.2	52	11	7.8	52	12	2.9	3.6	0.5	8.6	None	-	-	-	25.7	30	30	27	148	26.7	30	30	28	150
												11746	16.5	1	19.8	31.9	35	35	29	148	33.2	35	35	31	150
												12846	27.8	1	33.4	48.9	50	50	45	148	50.2	60	60	46	150
												13346	33	1	39.7	56.8	60	60	52	148	58.1	60	60	53	150
												14246	41.7	2	50.2	69.9	70	70	64	148	71.2	80	80	65	150
	575-3-60	5.7	43.8	9	5.7	38.9	9	2.2	2.5	0.4	8.6	None	-	-	-	19.2	20	20	20	113	20	20	20	21	115
												11758	17	1	16.4	25.8	30	30	24	113	26.8	30	30	25	115
												13458	34	1	32.7	46.2	50	50	42	113	47.2	50	50	43	115

ZL08-14 Standard Indoor Blower - With Powered Convenience Outlet

Size (Tons)	Nominal Unit Voltage	Compressor 1			Compressor 2			OD Fan Motors (each)	Supply Blower Motor	Pwr Exh Motor	Pwr Conv Outlet	Electric Heat Field Installed Kit 2EK045*				MCA[1] (Amps)	Min Fuse[2]/ Breaker[3] Size (Amps)	Max Fuse[2]/ Breaker[3] Size (Amps)	Min Disconnect Rating[4]		MCA[1] w/Pwr Exh (Amps)	Min Fuse[2]/ Breaker[3] Size w/ Pwr Exh (Amps)	Max Fuse[2]/ Breaker[3] Size w/ Pwr Exh (Amps)	Min Disconnect Rating[4]/ Pwr Exh	
		RLA	LRA	MCC	RLA	LRA	MCC					Model	kW	Stages	Amps				FLA	LRA				FLA	LRA
14 (12.5)	208-3-60	18.6	149	29	19.6	136	31	5.8	8.9	0	8.6	None	-	-	-	62.1	70	80	66	388	62.1	70	80	66	388
												11725	12	1	33.3	62.1	70	80	66	388	62.1	70	80	66	388
												12525	18.6	1	51.6	81	90	90	75	388	81	90	90	75	388
												13225	24	1	66.6	99.8	100	100	92	388	99.8	100	100	92	388
												14225	31.8	2	88.3	126.9	150	150	117	388	126.9	150	150	117	388
	230-3-60	18.6	149	29	19.6	136	31	5.2	8.2	0	8.6	None	-	-	-	60.8	70	80	64	387	60.8	70	80	64	387
												11725	16	1	38.5	63.8	70	80	64	387	63.8	70	80	64	387
												12525	24.8	1	59.7	90.3	100	100	83	387	90.3	100	100	83	387
												13225	32	1	77	111.9	125	125	103	387	111.9	125	125	103	387
												14225	42.4	2	102	143.1	150	150	132	387	143.1	150	150	132	387
	460-3-60	9	60.9	14	8.2	66.1	13	2.9	4.1	0	8.6	None	-	-	-	28.7	30	35	30	175	28.7	30	35	30	175
												11746	16.5	1	19.8	32.6	35	35	30	175	32.6	35	35	30	175
												12846	27.8	1	33.4	49.6	50	50	46	175	49.6	50	50	46	175
												13346	33	1	39.7	57.4	60	60	53	175	57.4	60	60	53	175
												14246	41.7	2	50.2	70.6	80	80	65	175	70.6	80	80	65	175
	575-3-60	7.1	56	11	6.6	55.3	10	2.2	3.2	0	8.6	None	-	-	-	22.6	25	25	24	150	22.6	25	25	24	150
												11758	17	1	16.4	26.7	30	30	25	150	26.7	30	30	25	150
												13458	34	1	32.7	47	50	50	43	150	47	50	50	43	150

1. Minimum Circuit Ampacity.
2. Dual Element, Time Delay Type.
3. HACR type per NEC.
4. Non-fused Disconnect, Verify on the unit nameplate that the disconnect is properly sized for the application. Units with field installed electric heat kits may exceed the factory installed disconnect amperage rating.

ZL08-14 Medium Indoor Blower - Without Powered Convenience Outlet

Size (Tons)	Nominal Unit Voltage	Compressor 1			Compressor 2			OD Fan Motors (each)	Supply Blower Motor	Pwr Exh Motor	Pwr Conv Outlet	Electric Heat Field Installed Kit 2EK045*				MCA[1] (Amps)	Min Fuse[2]/ Breaker[3] Size (Amps)	Max Fuse[2]/ Breaker[3] Size (Amps)	Min Disconnect Rating[4]		MCA[1] w/Pwr Exh (Amps)	Min Fuse[2]/ Breaker[3] Size w/ Pwr Exh (Amps)	Max Fuse[2]/ Breaker[3] Size w/ Pwr Exh (Amps)	Min Disconnect Rating[4]/ Pwr Exh	
		RLA	LRA	MCC	RLA	LRA	MCC					Model	kW	Stages	Amps				FLA	LRA				FLA	LRA
With VFD																									
08 (7.5)	208-3-60	14	83.1	22	13.5	88	21	2.3	7	1.1		None	-	-	-	42.6	45	50	45	241	44.8	45	50	47	246
												11725	12	1	33.3	50.4	60	60	46	241	53.1	60	60	49	246
												12525	18.6	1	51.6	73.3	80	80	67	241	76	80	80	70	246
												13225	24	1	66.6	92	100	100	85	241	94.8	100	100	87	246
												14225	31.8	2	88.3	119.1	125	125	110	241	121.9	125	125	112	246
	230-3-60	14	83.1	22	13.5	88	21	2.3	7.2	1		None	-	-	-	42.8	45	50	45	243	44.8	45	50	47	248
												11725	16	1	38.5	57.1	60	60	53	243	59.6	60	60	55	248
												12525	24.8	1	59.7	83.6	90	90	77	243	86.1	90	90	79	248
												13225	32	1	77	105.3	110	110	97	243	107.8	110	110	99	248
												14225	42.4	2	102	136.5	150	150	126	243	139	150	150	128	248
	460-3-60	6.4	41	10	6	44	9	1.3	3.6	0.5		None	-	-	-	20.2	25	25	21	122	21.2	25	25	23	124
												11746	16.5	1	19.8	29.3	30	30	27	122	30.5	35	35	28	124
												12846	27.8	1	33.4	46.3	50	50	43	122	47.5	50	50	44	124
												13346	33	1	39.7	54.1	60	60	50	122	55.4	60	60	51	124
												14246	41.7	2	50.2	67.3	70	70	62	122	68.5	70	70	63	124
	575-3-60	4.6	33	7	4.9	34	8	1.1	2.5	0.4		None	-	-	-	15.4	20	20	16	89	16.2	20	20	17	91
												11758	17	1	16.4	23.6	25	25	22	89	24.6	25	25	23	91
												13458	34	1	32.7	44	45	45	40	89	45	45	45	41	91
09 (8.5)	208-3-60	14	83.1	22	13.7	83.1	21	2.3	7	1.1		None	-	-	-	42.8	45	50	45	236	45	45	50	48	241
												11725	12	1	33.3	50.4	60	60	46	236	53.1	60	60	49	241
												12525	18.6	1	51.6	73.3	80	80	67	236	76	80	80	70	241
												13225	24	1	66.6	92	100	100	85	236	94.8	100	100	87	241
												14225	31.8	2	88.3	119.1	125	125	110	236	121.9	125	125	112	241
	230-3-60	14	83.1	22	13.7	83.1	21	2.3	7.2	1		None	-	-	-	43	45	50	45	238	45	45	50	48	243
												11725	16	1	38.5	57.1	60	60	53	238	59.6	60	60	55	243
												12525	24.8	1	59.7	83.6	90	90	77	238	86.1	90	90	79	243
												13225	32	1	77	105.3	110	110	97	238	107.8	110	110	99	243
												14225	42.4	2	102	136.5	150	150	126	238	139	150	150	128	243
	460-3-60	6.4	41	10	6.2	41	10	1.3	3.6	0.5		None	-	-	-	20.4	25	25	22	119	21.4	25	25	23	121
												11746	16.5	1	19.8	29.3	30	30	27	119	30.5	35	35	28	121
												12846	27.8	1	33.4	46.3	50	50	43	119	47.5	50	50	44	121
												13346	33	1	39.7	54.1	60	60	50	119	55.4	60	60	51	121
												14246	41.7	2	50.2	67.3	70	70	62	119	68.5	70	70	63	121
	575-3-60	4.6	33	7	4.8	33	8	1.1	2.5	0.4		None	-	-	-	15.3	20	20	16	88	16.1	20	20	17	90
												11758	17	1	16.4	23.6	25	25	22	88	24.6	25	25	23	90
												13458	34	1	32.7	44	45	45	40	88	45	45	45	41	90
12 (10)	208-3-60	16.5	110	26	16	110	25	5.8	9.9	1.1		None	-	-	-	52.3	60	60	55	315	54.5	60	60	58	320
												11725	12	1	33.3	54	60	60	55	315	56.8	60	60	58	320
												12525	18.6	1	51.6	76.9	80	80	71	315	79.6	80	80	73	320
												13225	24	1	66.6	95.6	100	100	88	315	98.4	100	100	91	320
												14225	31.8	2	88.3	122.8	125	125	113	315	125.5	150	150	115	320
	230-3-60	16.5	110	26	16	110	25	5.2	9.4	1		None	-	-	-	51.2	60	60	54	320	53.2	60	60	56	324
												11725	16	1	38.5	59.9	60	60	55	320	62.4	70	70	57	324
												12525	24.8	1	59.7	86.4	90	90	79	320	88.9	90	90	82	324
												13225	32	1	77	108	110	110	99	320	110.5	125	125	102	324
												14225	42.4	2	102	139.3	150	150	128	320	141.8	150	150	130	324
	460-3-60	7.2	52	11	7.8	52	12	2.9	4.7	0.5		None	-	-	-	24.6	25	30	26	155	25.6	30	30	27	158
												11746	16.5	1	19.8	30.6	35	35	28	155	31.9	35	35	29	158
												12846	27.8	1	33.4	47.6	50	50	44	155	48.9	50	50	45	158
												13346	33	1	39.7	55.5	60	60	51	155	56.8	60	60	52	158
												14246	41.7	2	50.2	68.6	70	70	63	155	69.9	70	70	64	158
	575-3-60	5.7	43.8	9	5.7	38.9	9	2.2	4.3	0.4		None	-	-	-	19.3	20	25	21	134	20.1	25	25	22	136
												11758	17	1	16.4	25.9	30	30	24	134	26.9	30	30	25	136
												13458	34	1	32.7	46.3	50	50	43	134	47.3	50	50	43	136

ZL08-14 Medium Indoor Blower - Without Powered Convenience Outlet

Size (Tons)	Nominal Unit Voltage	Compressor 1			Compressor 2			OD Fan Motors (each)	Supply Blower Motor	Pwr Exh Motor	Pwr Conv Outlet	Electric Heat Field Installed Kit 2EK045*				MCA[1] (Amps)	Min Fuse[2]/ Breaker[3] Size (Amps)	Max Fuse[2]/ Breaker[3] Size (Amps)	Min Disconnect Rating[4]		MCA[1] w/Pwr Exh (Amps)	Min Fuse[2]/ Breaker[3] Size w/ Pwr Exh (Amps)	Max Fuse[2]/ Breaker[3] Size w/ Pwr Exh (Amps)	Min Disconnect Rating[4]/ Pwr Exh	
		RLA	LRA	MCC	RLA	LRA	MCC					Model	kW	Stages	Amps				FLA	LRA				FLA	LRA
14 (12.5)	208-3-60	18.6	149	29	19.6	136	31	5.8	9.9	0		None	-	-	-	58.8	60	70	62	380	58.8	60	70	62	380
												11725	12	1	33.3	58.8	60	70	62	380	58.8	60	70	62	380
												12525	18.6	1	51.6	76.9	80	80	71	380	76.9	80	80	71	380
												13225	24	1	66.6	95.6	100	100	88	380	95.6	100	100	88	380
												14225	31.8	2	88.3	122.8	125	125	113	380	122.8	125	125	113	380
	230-3-60	18.6	149	29	19.6	136	31	5.2	9.4	0		None	-	-	-	57.7	60	70	61	385	57.7	60	70	61	385
												11725	16	1	38.5	59.9	60	70	61	385	59.9	60	70	61	385
												12525	24.8	1	59.7	86.4	90	90	79	385	86.4	90	90	79	385
												13225	32	1	77	108	110	110	99	385	108	110	110	99	385
												14225	42.4	2	102	139.3	150	150	128	385	139.3	150	150	128	385
	460-3-60	9	60.9	14	8.2	66.1	13	2.9	4.7	0		None	-	-	-	27.1	30	35	29	178	27.1	30	35	29	178
												11746	16.5	1	19.8	30.6	35	35	28	178	30.6	35	35	28	178
												12846	27.8	1	33.4	47.6	50	50	44	178	47.6	50	50	44	178
												13346	33	1	39.7	55.5	60	60	51	178	55.5	60	60	51	178
												14246	41.7	2	50.2	68.6	70	70	63	178	68.6	70	70	63	178
	575-3-60	7.1	56	11	6.6	55.3	10	2.2	4.3	0		None	-	-	-	22	25	25	23	163	22	25	25	23	163
												11758	17	1	16.4	25.9	30	30	24	163	25.9	30	30	24	163
												13458	34	1	32.7	46.3	50	50	43	163	46.3	50	50	43	163

1. Minimum Circuit Ampacity.
2. Dual Element, Time Delay Type.
3. HACR type per NEC.
4. Non-fused Disconnect, Verify on the unit nameplate that the disconnect is properly sized for the application. Units with field installed electric heat kits may exceed the factory installed disconnect amperage rating.

ZL08-14 Medium Indoor Blower - With Powered Convenience Outlet

Size (Tons)	Nominal Unit Voltage	Compressor 1			Compressor 2			OD Fan Motors (each)	Supply Blower Motor	Pwr Exh Motor	Pwr Conv Outlet	Electric Heat Field Installed Kit 2EK045*				MCA[1] (Amps)	Min Fuse[2]/ Breaker[3] Size (Amps)	Max Fuse[2]/ Breaker[3] Size (Amps)	Min Disconnect Rating[4]		MCA[1] w/Pwr Exh (Amps)	Min Fuse[2]/ Breaker[3] Size w/ Pwr Exh (Amps)	Max Fuse[2]/ Breaker[3] Size w/ Pwr Exh (Amps)	Min Disconnect Rating[4]/ Pwr Exh	
		RLA	LRA	MCC	RLA	LRA	MCC					Model	kW	Stages	Amps				FLA	LRA				FLA	LRA
With VFD																									
08 (7.5)	208-3-60	14	83.1	22	13.5	88	21	2.3	7	1.1	8.6	None	-	-	-	46.9	50	60	50	245	49.1	50	60	52	250
												11725	12	1	33.3	55.8	60	60	51	245	58.5	60	60	54	250
												12525	18.6	1	51.6	78.6	80	80	72	245	81.4	90	90	75	250
												13225	24	1	66.6	97.4	100	100	90	245	100.1	110	110	92	250
												14225	31.8	2	88.3	124.5	125	125	115	245	127.3	150	150	117	250
	230-3-60	14	83.1	22	13.5	88	21	2.3	7.2	1	8.6	None	-	-	-	47.1	50	60	50	247	49.1	50	60	52	252
												11725	16	1	38.5	62.5	70	70	58	247	65	70	70	60	252
												12525	24.8	1	59.7	89	90	90	82	247	91.5	100	100	84	252
												13225	32	1	77	110.6	125	125	102	247	113.1	125	125	104	252
												14225	42.4	2	102	141.9	150	150	131	247	144.4	150	150	133	252
	460-3-60	6.4	41	10	6	44	9	1.3	3.6	0.5	8.6	None	-	-	-	22.4	25	25	24	124	23.4	25	25	25	126
												11746	16.5	1	19.8	31.9	35	35	29	124	33.2	35	35	31	126
												12846	27.8	1	33.4	48.9	50	50	45	124	50.2	60	60	46	126
												13346	33	1	39.7	56.8	60	60	52	124	58.1	60	60	53	126
												14246	41.7	2	50.2	69.9	70	70	64	124	71.2	80	80	65	126
	575-3-60	4.6	33	7	4.9	34	8	1.1	2.5	0.4	8.6	None	-	-	-	17.1	20	20	18	91	17.9	20	20	19	93
												11758	17	1	16.4	25.8	30	30	24	91	26.8	30	30	25	93
												13458	34	1	32.7	46.2	50	50	42	91	47.2	50	50	43	93
09 (8.5)	208-3-60	14	83.1	22	13.7	83.1	21	2.3	7	1.1	8.6	None	-	-	-	47.1	50	60	50	240	49.3	50	60	53	245
												11725	12	1	33.3	55.8	60	60	51	240	58.5	60	60	54	245
												12525	18.6	1	51.6	78.6	80	80	72	240	81.4	90	90	75	245
												13225	24	1	66.6	97.4	100	100	90	240	100.1	110	110	92	245
												14225	31.8	2	88.3	124.5	125	125	115	240	127.3	150	150	117	245
	230-3-60	14	83.1	22	13.7	83.1	21	2.3	7.2	1	8.6	None	-	-	-	47.3	50	60	50	242	49.3	50	60	53	247
												11725	16	1	38.5	62.5	70	70	58	242	65	70	70	60	247
												12525	24.8	1	59.7	89	90	90	82	242	91.5	100	100	84	247
												13225	32	1	77	110.6	125	125	102	242	113.1	125	125	104	247
												14225	42.4	2	102	141.9	150	150	131	242	144.4	150	150	133	247
	460-3-60	6.4	41	10	6.2	41	10	1.3	3.6	0.5	8.6	None	-	-	-	22.6	25	25	24	121	23.6	25	25	25	123
												11746	16.5	1	19.8	31.9	35	35	29	121	33.2	35	35	31	123
												12846	27.8	1	33.4	48.9	50	50	45	121	50.2	60	60	46	123
												13346	33	1	39.7	56.8	60	60	52	121	58.1	60	60	53	123
												14246	41.7	2	50.2	69.9	70	70	64	121	71.2	80	80	65	123
	575-3-60	4.6	33	7	4.8	33	8	1.1	2.5	0.4	8.6	None	-	-	-	17	20	20	18	90	17.8	20	20	19	92
												11758	17	1	16.4	25.8	30	30	24	90	26.8	30	30	25	92
												13458	34	1	32.7	46.2	50	50	42	90	47.2	50	50	43	92
12 (10)	208-3-60	16.5	110	26	16	110	25	5.8	9.9	1.1	8.6	None	-	-	-	56.6	60	70	60	319	58.8	60	70	63	324
												11725	12	1	33.3	59.4	60	70	60	319	62.1	70	70	63	324
												12525	18.6	1	51.6	82.3	90	90	76	319	85	90	90	78	324
												13225	24	1	66.6	101	110	110	93	319	103.8	110	110	95	324
												14225	31.8	2	88.3	128.1	150	150	118	319	130.9	150	150	120	324
	230-3-60	16.5	110	26	16	110	25	5.2	9.4	1	8.6	None	-	-	-	55.5	60	70	59	324	57.5	60	70	61	329
												11725	16	1	38.5	65.3	70	70	60	324	67.8	70	70	62	329
												12525	24.8	1	59.7	91.8	100	100	84	324	94.3	100	100	87	329
												13225	32	1	77	113.4	125	125	104	324	115.9	125	125	107	329
												14225	42.4	2	102	144.6	150	150	133	324	147.1	150	150	135	329
	460-3-60	7.2	52	11	7.8	52	12	2.9	4.7	0.5	8.6	None	-	-	-	26.8	30	30	29	157	27.8	30	30	30	160
												11746	16.5	1	19.8	33.3	35	35	31	157	34.6	35	35	32	160
												12846	27.8	1	33.4	50.3	60	60	46	157	51.6	60	60	47	160
												13346	33	1	39.7	58.2	60	60	54	157	59.4	60	60	55	160
												14246	41.7	2	50.2	71.3	80	80	66	157	72.6	80	80	67	160
	575-3-60	5.7	43.8	9	5.7	38.9	9	2.2	4.3	0.4	8.6	None	-	-	-	21	25	25	23	136	21.8	25	25	23	138
												11758	17	1	16.4	28	30	30	26	136	29	30	30	27	138
												13458	34	1	32.7	48.4	50	50	45	136	49.4	50	50	45	138

ZL08-14 Medium Indoor Blower - With Powered Convenience Outlet

Size (Tons)	Nominal Unit Voltage	Compressor 1			Compressor 2			OD Fan Motors (each)	Supply Blower Motor	Pwr Exh Motor	Pwr Conv Outlet	Electric Heat Field Installed Kit 2EK045*				MCA[1] (Amps)	Min Fuse[2]/ Breaker[3] Size (Amps)	Max Fuse[2]/ Breaker[3] Size (Amps)	Min Disconnect Rating[4]		MCA[1] w/Pwr Exh (Amps)	Min Fuse[2]/ Breaker[3] Size w/ Pwr Exh (Amps)	Max Fuse[2]/ Breaker[3] Size w/ Pwr Exh (Amps)	Min Disconnect Rating[4]/ Pwr Exh	
		RLA	LRA	MCC	RLA	LRA	MCC					Model	kW	Stages	Amps				FLA	LRA				FLA	LRA
14 (12.5)	208-3-60	18.6	149	29	19.6	136	31	5.8	9.9	0	8.6	None	-	-	-	63.1	70	80	67	384	63.1	70	80	67	384
												11725	12	1	33.3	63.1	70	80	67	384	63.1	70	80	67	384
												12525	18.6	1	51.6	82.3	90	90	76	384	82.3	90	90	76	384
												13225	24	1	66.6	101	110	110	93	384	101	110	110	93	384
												14225	31.8	2	88.3	128.1	150	150	118	384	128.1	150	150	118	384
	230-3-60	18.6	149	29	19.6	136	31	5.2	9.4	0	8.6	None	-	-	-	62	70	80	66	389	62	70	80	66	389
												11725	16	1	38.5	65.3	70	80	66	389	65.3	70	80	66	389
												12525	24.8	1	59.7	91.8	100	100	84	389	91.8	100	100	84	389
												13225	32	1	77	113.4	125	125	104	389	113.4	125	125	104	389
												14225	42.4	2	102	144.6	150	150	133	389	144.6	150	150	133	389
	460-3-60	9	60.9	14	8.2	66.1	13	2.9	4.7	0	8.6	None	-	-	-	29.3	30	35	31	180	29.3	30	35	31	180
												11746	16.5	1	19.8	33.3	35	35	31	180	33.3	35	35	31	180
												12846	27.8	1	33.4	50.3	60	60	46	180	50.3	60	60	46	180
												13346	33	1	39.7	58.2	60	60	54	180	58.2	60	60	54	180
												14246	41.7	2	50.2	71.3	80	80	66	180	71.3	80	80	66	180
	575-3-60	7.1	56	11	6.6	55.3	10	2.2	4.3	0	8.6	None	-	-	-	23.7	25	30	25	164	23.7	25	30	25	164
												11758	17	1	16.4	28	30	30	26	164	28	30	30	26	164
												13458	34	1	32.7	48.4	50	50	45	164	48.4	50	50	45	164

1. Minimum Circuit Ampacity.
2. Dual Element, Time Delay Type.
3. HACR type per NEC.
4. Non-fused Disconnect, Verify on the unit nameplate that the disconnect is properly sized for the application. Units with field installed electric heat kits may exceed the factory installed disconnect amperage rating.

ZL08-14 High Indoor Blower - Without Powered Convenience Outlet

Size (Tons)	Nominal Unit Voltage	Compressor 1			Compressor 2			OD Fan Motors (each)	Supply Blower Motor	Pwr Exh Motor	Pwr Conv Outlet	Electric Heat Field Installed Kit 2EK045*				MCA[1] (Amps)	Min Fuse[2]/ Breaker[3] Size (Amps)	Max Fuse[2]/ Breaker[3] Size (Amps)	Min Disconnect Rating[4]		MCA[1] w/Pwr Exh (Amps)	Min Fuse[2]/ Breaker[3] Size w/ Pwr Exh (Amps)	Max Fuse[2]/ Breaker[3] Size w/ Pwr Exh (Amps)	Min Disconnect Rating[4]/ Pwr Exh	
		RLA	LRA	MCC	RLA	LRA	MCC					Model	kW	Stages	Amps				FLA	LRA				FLA	LRA
With VFD																									
08 (7.5)	208-3-60	14	83.1	22	13.5	88	21	2.3	9.9	1.1		None	-	-	-	45.5	50	50	48	253	47.7	50	60	51	258
												11725	12	1	33.3	54	60	60	50	253	56.8	60	60	52	258
												12525	18.6	1	51.6	76.9	80	80	71	253	79.6	80	80	73	258
												13225	24	1	66.6	95.6	100	100	88	253	98.4	100	100	91	258
												14225	31.8	2	88.3	122.8	125	125	113	253	125.5	150	150	115	258
	230-3-60	14	83.1	22	13.5	88	21	2.3	9.4	1		None	-	-	-	45	45	50	48	262	47	50	60	50	266
												11725	16	1	38.5	59.9	60	60	55	262	62.4	70	70	57	266
												12525	24.8	1	59.7	86.4	90	90	79	262	88.9	90	90	82	266
												13225	32	1	77	108	110	110	99	262	110.5	125	125	102	266
												14225	42.4	2	102	139.3	150	150	128	262	141.8	150	150	130	266
	460-3-60	6.4	41	10	6	44	9	1.3	4.7	0.5		None	-	-	-	21.3	25	25	23	131	22.3	25	25	24	133
												11746	16.5	1	19.8	30.6	35	35	28	131	31.9	35	35	29	133
												12846	27.8	1	33.4	47.6	50	50	44	131	48.9	50	50	45	133
												13346	33	1	39.7	55.5	60	60	51	131	56.8	60	60	52	133
												14246	41.7	2	50.2	68.6	70	70	63	131	69.9	70	70	64	133
	575-3-60	4.6	33	7	4.9	34	8	1.1	4.3	0.4		None	-	-	-	17.2	20	20	18	112	18	20	20	19	114
												11758	17	1	16.4	25.9	30	30	24	112	26.9	30	30	25	114
												13458	34	1	32.7	46.3	50	50	43	112	47.3	50	50	43	114
09 (8.5)	208-3-60	14	83.1	22	13.7	83.1	21	2.3	9.9	1.1		None	-	-	-	45.7	50	50	49	248	47.9	50	60	51	253
												11725	12	1	33.3	54	60	60	50	248	56.8	60	60	52	253
												12525	18.6	1	51.6	76.9	80	80	71	248	79.6	80	80	73	253
												13225	24	1	66.6	95.6	100	100	88	248	98.4	100	100	91	253
												14225	31.8	2	88.3	122.8	125	125	113	248	125.5	150	150	115	253
	230-3-60	14	83.1	22	13.7	83.1	21	2.3	9.4	1		None	-	-	-	45.2	50	50	48	257	47.2	50	60	50	261
												11725	16	1	38.5	59.9	60	60	55	257	62.4	70	70	57	261
												12525	24.8	1	59.7	86.4	90	90	79	257	88.9	90	90	82	261
												13225	32	1	77	108	110	110	99	257	110.5	125	125	102	261
												14225	42.4	2	102	139.3	150	150	128	257	141.8	150	150	130	261
	460-3-60	6.4	41	10	6.2	41	10	1.3	4.7	0.5		None	-	-	-	21.5	25	25	23	128	22.5	25	25	24	130
												11746	16.5	1	19.8	30.6	35	35	28	128	31.9	35	35	29	130
												12846	27.8	1	33.4	47.6	50	50	44	128	48.9	50	50	45	130
												13346	33	1	39.7	55.5	60	60	51	128	56.8	60	60	52	130
												14246	41.7	2	50.2	68.6	70	70	63	128	69.9	70	70	64	130
	575-3-60	4.6	33	7	4.8	33	8	1.1	4.3	0.4		None	-	-	-	17.1	20	20	18	111	17.9	20	20	19	113
												11758	17	1	16.4	25.9	30	30	24	111	26.9	30	30	25	113
												13458	34	1	32.7	46.3	50	50	43	111	47.3	50	50	43	113
12 (10)	208-3-60	16.5	110	26	16	110	25	5.8	13.5	1.1		None	-	-	-	55.9	60	70	60	345	58.1	60	70	62	350
												11725	12	1	33.3	58.5	60	70	60	345	61.3	70	70	62	350
												12525	18.6	1	51.6	81.4	90	90	75	345	84.1	90	90	77	350
												13225	24	1	66.6	100.1	110	110	92	345	102.9	110	110	95	350
												14225	31.8	2	88.3	127.3	150	150	117	345	130	150	150	120	350
	230-3-60	16.5	110	26	16	110	25	5.2	13.4	1		None	-	-	-	55.2	60	70	59	341	57.2	60	70	61	346
												11725	16	1	38.5	64.9	70	70	60	341	67.4	70	70	62	346
												12525	24.8	1	59.7	91.4	100	100	84	341	93.9	100	100	86	346
												13225	32	1	77	113	125	125	104	341	115.5	125	125	106	346
												14225	42.4	2	102	144.3	150	150	133	341	146.8	150	150	135	346
	460-3-60	7.2	52	11	7.8	52	12	2.9	6.7	0.5		None	-	-	-	26.6	30	30	28	166	27.6	30	30	29	168
												11746	16.5	1	19.8	33.1	35	35	30	166	34.4	35	35	32	168
												12846	27.8	1	33.4	50.1	60	60	46	166	51.4	60	60	47	168
												13346	33	1	39.7	58	60	60	53	166	59.3	60	60	55	168
												14246	41.7	2	50.2	71.1	80	80	65	166	72.4	80	80	67	168
	575-3-60	5.7	43.8	9	5.7	38.9	9	2.2	5.4	0.4		None	-	-	-	20.4	25	25	22	134	21.2	25	25	23	136
												11758	17	1	16.4	27.3	30	30	25	134	28.3	30	30	26	136
												13458	34	1	32.7	47.6	50	50	44	134	48.6	50	50	45	136

ZL08-14 High Indoor Blower - Without Powered Convenience Outlet

Size (Tons)	Nominal Unit Voltage	Compressor 1			Compressor 2			OD Fan Motors (each)	Supply Blower Motor	Pwr Exh Motor	Pwr Conv Outlet	Electric Heat Field Installed Kit 2EK045*				MCA[1] (Amps)	Min Fuse[2]/ Breaker[3] Size (Amps)	Max Fuse[2]/ Breaker[3] Size (Amps)	Min Disconnect Rating[4]		MCA[1] w/Pwr Exh (Amps)	Min Fuse[2]/ Breaker[3] Size w/ Pwr Exh (Amps)	Max Fuse[2]/ Breaker[3] Size w/ Pwr Exh (Amps)	Min Disconnect Rating[4]/ Pwr Exh	
		RLA	LRA	MCC	RLA	LRA	MCC					Model	kW	Stages	Amps				FLA	LRA				FLA	LRA
14 (12.5)	208-3-60	18.6	149	29	19.6	136	31	5.8	13.5	0		None	-	-	-	62.4	70	80	66	410	62.4	70	80	66	410
												11725	12	1	33.3	62.4	70	80	66	410	62.4	70	80	66	410
												12525	18.6	1	51.6	81.4	90	90	75	410	81.4	90	90	75	410
												13225	24	1	66.6	100.1	110	110	92	410	100.1	110	110	92	410
												14225	31.8	2	88.3	127.3	150	150	117	410	127.3	150	150	117	410
	230-3-60	18.6	149	29	19.6	136	31	5.2	13.4	0		None	-	-	-	61.7	70	80	65	406	61.7	70	80	65	406
												11725	16	1	38.5	64.9	70	80	65	406	64.9	70	80	65	406
												12525	24.8	1	59.7	91.4	100	100	84	406	91.4	100	100	84	406
												13225	32	1	77	113	125	125	104	406	113	125	125	104	406
												14225	42.4	2	102	144.3	150	150	133	406	144.3	150	150	133	406
	460-3-60	9	60.9	14	8.2	66.1	13	2.9	6.7	0		None	-	-	-	29.1	30	35	31	189	29.1	30	35	31	189
												11746	16.5	1	19.8	33.1	35	35	30	189	33.1	35	35	30	189
												12846	27.8	1	33.4	50.1	60	60	46	189	50.1	60	60	46	189
												13346	33	1	39.7	58	60	60	53	189	58	60	60	53	189
												14246	41.7	2	50.2	71.1	80	80	65	189	71.1	80	80	65	189
	575-3-60	7.1	56	11	6.6	55.3	10	2.2	5.4	0		None	-	-	-	23.1	25	30	24	163	23.1	25	30	24	163
												11758	17	1	16.4	27.3	30	30	25	163	27.3	30	30	25	163
												13458	34	1	32.7	47.6	50	50	44	163	47.6	50	50	44	163

1. Minimum Circuit Ampacity.
2. Dual Element, Time Delay Type.
3. HACR type per NEC.
4. Non-fused Disconnect, Verify on the unit nameplate that the disconnect is properly sized for the application. Units with field installed electric heat kits may exceed the factory installed disconnect amperage rating.

ZL08-14 High Indoor Blower - With Powered Convenience Outlet

Size (Tons)	Nominal Unit Voltage	Compressor 1			Compressor 2			OD Fan Motors (each)	Supply Blower Motor	Pwr Exh Motor	Pwr Conv Outlet	Electric Heat Field Installed Kit 2EK045*				MCA[1] (Amps)	Min Fuse[2]/ Breaker[3] Size (Amps)	Max Fuse[2]/ Breaker[3] Size (Amps)	Min Disconnect Rating[4]		MCA[1] w/Pwr Exh (Amps)	Min Fuse[2]/ Breaker[3] Size w/ Pwr Exh (Amps)	Max Fuse[2]/ Breaker[3] Size w/ Pwr Exh (Amps)	Min Disconnect Rating[4]/ Pwr Exh	
		RLA	LRA	MCC	RLA	LRA	MCC					Model	kW	Stages	Amps				FLA	LRA				FLA	LRA
With VFD																									
08 (7.5)	208-3-60	14	83.1	22	13.5	88	21	2.3	9.9	1.1	8.6	None	-	-	-	49.8	50	60	53	258	52	60	60	56	263
												11725	12	1	33.3	59.4	60	60	55	258	62.1	70	70	57	263
												12525	18.6	1	51.6	82.3	90	90	76	258	85	90	90	78	263
												13225	24	1	66.6	101	110	110	93	258	103.8	110	110	95	263
												14225	31.8	2	88.3	128.1	150	150	118	258	130.9	150	150	120	263
	230-3-60	14	83.1	22	13.5	88	21	2.3	9.4	1	8.6	None	-	-	-	49.3	50	60	53	266	51.3	60	60	55	271
												11725	16	1	38.5	65.3	70	70	60	266	67.8	70	70	62	271
												12525	24.8	1	59.7	91.8	100	100	84	266	94.3	100	100	87	271
												13225	32	1	77	113.4	125	125	104	266	115.9	125	125	107	271
												14225	42.4	2	102	144.6	150	150	133	266	147.1	150	150	135	271
	460-3-60	6.4	41	10	6	44	9	1.3	4.7	0.5	8.6	None	-	-	-	23.5	25	25	25	133	24.5	25	25	26	135
												11746	16.5	1	19.8	33.3	35	35	31	133	34.6	35	35	32	135
												12846	27.8	1	33.4	50.3	60	60	46	133	51.6	60	60	47	135
												13346	33	1	39.7	58.2	60	60	54	133	59.4	60	60	55	135
												14246	41.7	2	50.2	71.3	80	80	66	133	72.6	80	80	67	135
	575-3-60	4.6	33	7	4.9	34	8	1.1	4.3	0.4	8.6	None	-	-	-	18.9	20	20	20	113	19.7	20	20	21	115
												11758	17	1	16.4	28	30	30	26	113	29	30	30	27	115
												13458	34	1	32.7	48.4	50	50	45	113	49.4	50	50	45	115
09 (8.5)	208-3-60	14	83.1	22	13.7	83.1	21	2.3	9.9	1.1	8.6	None	-	-	-	50	50	60	53	253	52.2	60	60	56	258
												11725	12	1	33.3	59.4	60	60	55	253	62.1	70	70	57	258
												12525	18.6	1	51.6	82.3	90	90	76	253	85	90	90	78	258
												13225	24	1	66.6	101	110	110	93	253	103.8	110	110	95	258
												14225	31.8	2	88.3	128.1	150	150	118	253	130.9	150	150	120	258
	230-3-60	14	83.1	22	13.7	83.1	21	2.3	9.4	1	8.6	None	-	-	-	49.5	50	60	53	261	51.5	60	60	55	266
												11725	16	1	38.5	65.3	70	70	60	261	67.8	70	70	62	266
												12525	24.8	1	59.7	91.8	100	100	84	261	94.3	100	100	87	266
												13225	32	1	77	113.4	125	125	104	261	115.9	125	125	107	266
												14225	42.4	2	102	144.6	150	150	133	261	147.1	150	150	135	266
	460-3-60	6.4	41	10	6.2	41	10	1.3	4.7	0.5	8.6	None	-	-	-	23.7	25	30	25	130	24.7	25	30	27	132
												11746	16.5	1	19.8	33.3	35	35	31	130	34.6	35	35	32	132
												12846	27.8	1	33.4	50.3	60	60	46	130	51.6	60	60	47	132
												13346	33	1	39.7	58.2	60	60	54	130	59.4	60	60	55	132
												14246	41.7	2	50.2	71.3	80	80	66	130	72.6	80	80	67	132
	575-3-60	4.6	33	7	4.8	33	8	1.1	4.3	0.4	8.6	None	-	-	-	18.8	20	20	20	112	19.6	20	20	21	114
												11758	17	1	16.4	28	30	30	26	112	29	30	30	27	114
												13458	34	1	32.7	48.4	50	50	45	112	49.4	50	50	45	114
12 (10)	208-3-60	16.5	110	26	16	110	25	5.8	13.5	1.1	8.6	None	-	-	-	60.2	70	70	65	349	62.4	70	70	67	354
												11725	12	1	33.3	63.9	70	70	65	349	66.6	70	70	67	354
												12525	18.6	1	51.6	86.8	90	90	80	349	89.5	90	90	82	354
												13225	24	1	66.6	105.5	110	110	97	349	108.3	110	110	100	354
												14225	31.8	2	88.3	132.6	150	150	122	349	135.4	150	150	125	354
	230-3-60	16.5	110	26	16	110	25	5.2	13.4	1	8.6	None	-	-	-	59.5	60	70	64	345	61.5	70	70	66	350
												11725	16	1	38.5	70.3	80	80	65	345	72.8	80	80	67	350
												12525	24.8	1	59.7	96.8	100	100	89	345	99.3	100	100	91	350
												13225	32	1	77	118.4	125	125	109	345	120.9	125	125	111	350
												14225	42.4	2	102	149.6	150	150	138	345	152.1	175	175	140	350
	460-3-60	7.2	52	11	7.8	52	12	2.9	6.7	0.5	8.6	None	-	-	-	28.8	30	35	31	168	29.8	30	35	32	170
												11746	16.5	1	19.8	35.8	40	40	33	168	37.1	40	40	34	170
												12846	27.8	1	33.4	52.8	60	60	49	168	54.1	60	60	50	170
												13346	33	1	39.7	60.7	70	70	56	168	61.9	70	70	57	170
												14246	41.7	2	50.2	73.8	80	80	68	168	75.1	80	80	69	170
	575-3-60	5.7	43.8	9	5.7	38.9	9	2.2	5.4	0.4	8.6	None	-	-	-	22.1	25	25	24	136	22.9	25	25	25	138
												11758	17	1	16.4	29.4	30	30	27	136	30.4	35	35	28	138
												13458	34	1	32.7	49.8	50	50	46	136	50.8	60	60	47	138

ZL08-14 High Indoor Blower - With Powered Convenience Outlet

Size (Tons)	Nominal Unit Voltage	Compressor 1			Compressor 2			OD Fan Motors (each)	Supply Blower Motor	Pwr Exh Motor	Pwr Conv Outlet	Electric Heat Field Installed Kit 2EK045*				MCA[1] (Amps)	Min Fuse[2]/ Breaker[3] Size (Amps)	Max Fuse[2]/ Breaker[3] Size (Amps)	Min Disconnect Rating[4]		MCA[1] w/Pwr Exh (Amps)	Min Fuse[2]/ Breaker[3] Size w/ Pwr Exh (Amps)	Max Fuse[2]/ Breaker[3] Size w/ Pwr Exh (Amps)	Min Disconnect Rating[4]/ Pwr Exh	
		RLA	LRA	MCC	RLA	LRA	MCC					Model	kW	Stages	Amps				FLA	LRA				FLA	LRA
14 (12.5)	208-3-60	18.6	149	29	19.6	136	31	5.8	13.5	0	8.6	None	-	-	-	66.7	70	80	71	414	66.7	70	80	71	414
												11725	12	1	33.3	66.7	70	80	71	414	66.7	70	80	71	414
												12525	18.6	1	51.6	86.8	90	90	80	414	86.8	90	90	80	414
												13225	24	1	66.6	105.5	110	110	97	414	105.5	110	110	97	414
												14225	31.8	2	88.3	132.6	150	150	122	414	132.6	150	150	122	414
	230-3-60	18.6	149	29	19.6	136	31	5.2	13.4	0	8.6	None	-	-	-	66	70	80	70	410	66	70	80	70	410
												11725	16	1	38.5	70.3	80	80	70	410	70.3	80	80	70	410
												12525	24.8	1	59.7	96.8	100	100	89	410	96.8	100	100	89	410
												13225	32	1	77	118.4	125	125	109	410	118.4	125	125	109	410
												14225	42.4	2	102	149.6	150	150	138	410	149.6	150	150	138	410
	460-3-60	9	60.9	14	8.2	66.1	13	2.9	6.7	0	8.6	None	-	-	-	31.3	35	40	33	191	31.3	35	40	33	191
												11746	16.5	1	19.8	35.8	40	40	33	191	35.8	40	40	33	191
												12846	27.8	1	33.4	52.8	60	60	49	191	52.8	60	60	49	191
												13346	33	1	39.7	60.7	70	70	56	191	60.7	70	70	56	191
												14246	41.7	2	50.2	73.8	80	80	68	191	73.8	80	80	68	191
	575-3-60	7.1	56	11	6.6	55.3	10	2.2	5.4	0	8.6	None	-	-	-	24.8	25	30	26	164	24.8	25	30	26	164
												11758	17	1	16.4	29.4	30	30	27	164	29.4	30	30	27	164
												13458	34	1	32.7	49.8	50	50	46	164	49.8	50	50	46	164

1. Minimum Circuit Ampacity.
2. Dual Element, Time Delay Type.
3. HACR type per NEC.
4. Non-fused Disconnect, Verify on the unit nameplate that the disconnect is properly sized for the application. Units with field installed electric heat kits may exceed the factory installed disconnect amperage rating.

Typical Wiring Diagrams

ZX/ZY/ZQ/ZL04-14 Typical Wiring Diagrams

Typical ZY/ZQ04-06 Cooling Unit w/wo Gas Heat 208/230-1-60 Direct Drive Elementary Diagram Power Circuit

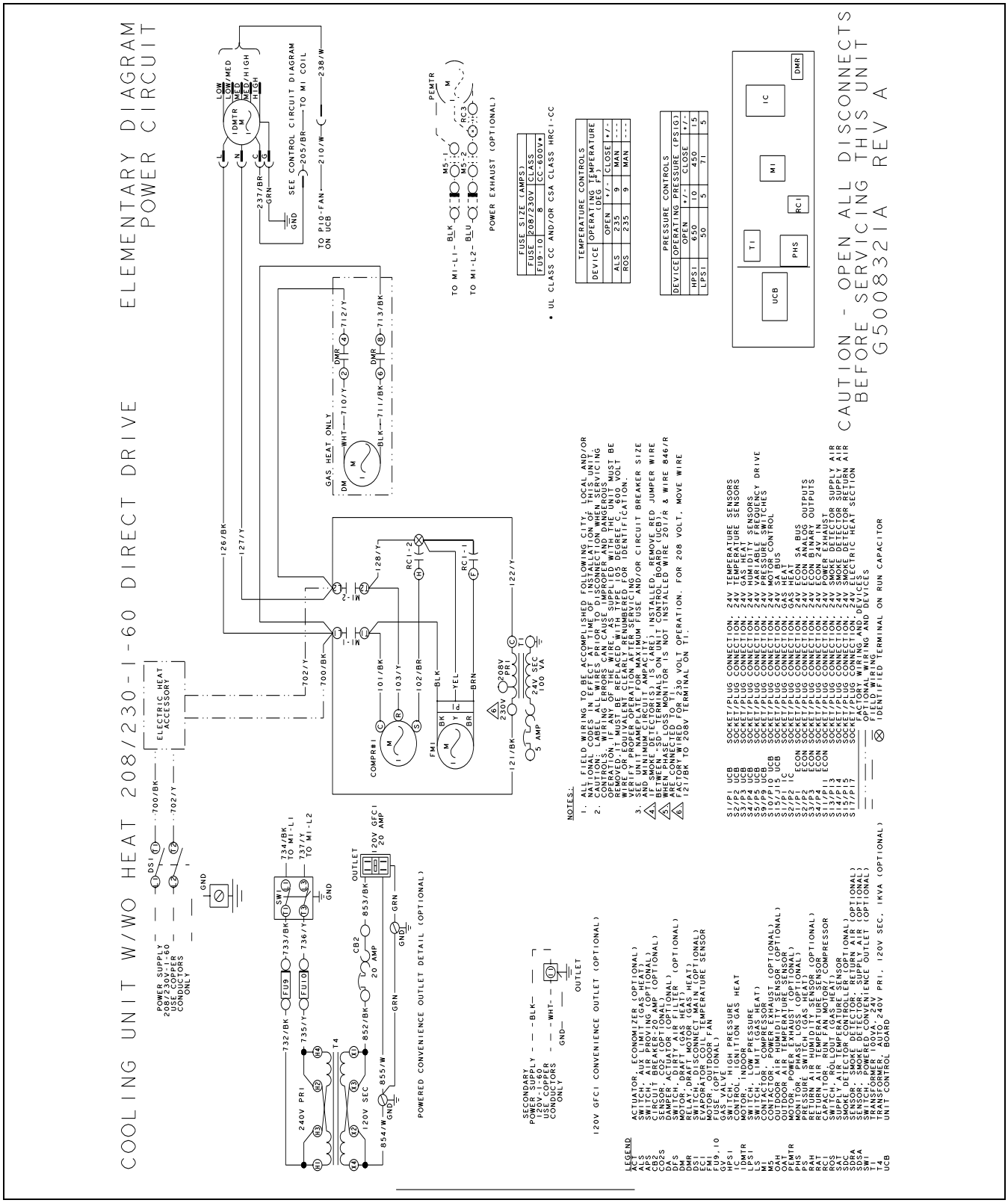

Typical ZY/ZQ04-06 Cooling Unit w/wo Gas Heat 208/230-3-60 Direct Drive Elementary Diagram Power Circuit

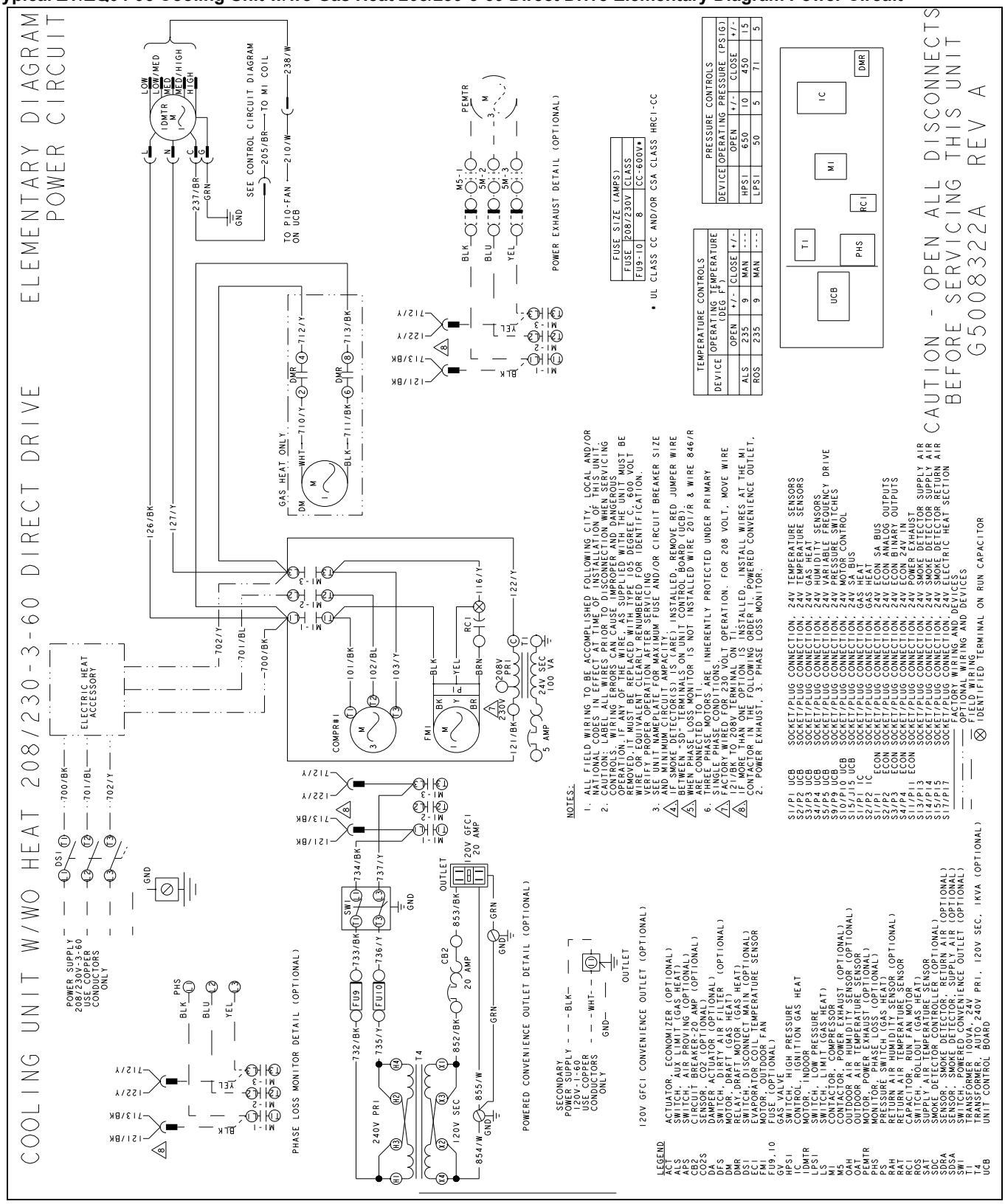

Typical ZY/ZQ04-06 Cooling Unit w/wo Gas Heat 460-3-60 Direct Drive Elementary Diagram Power Circuit

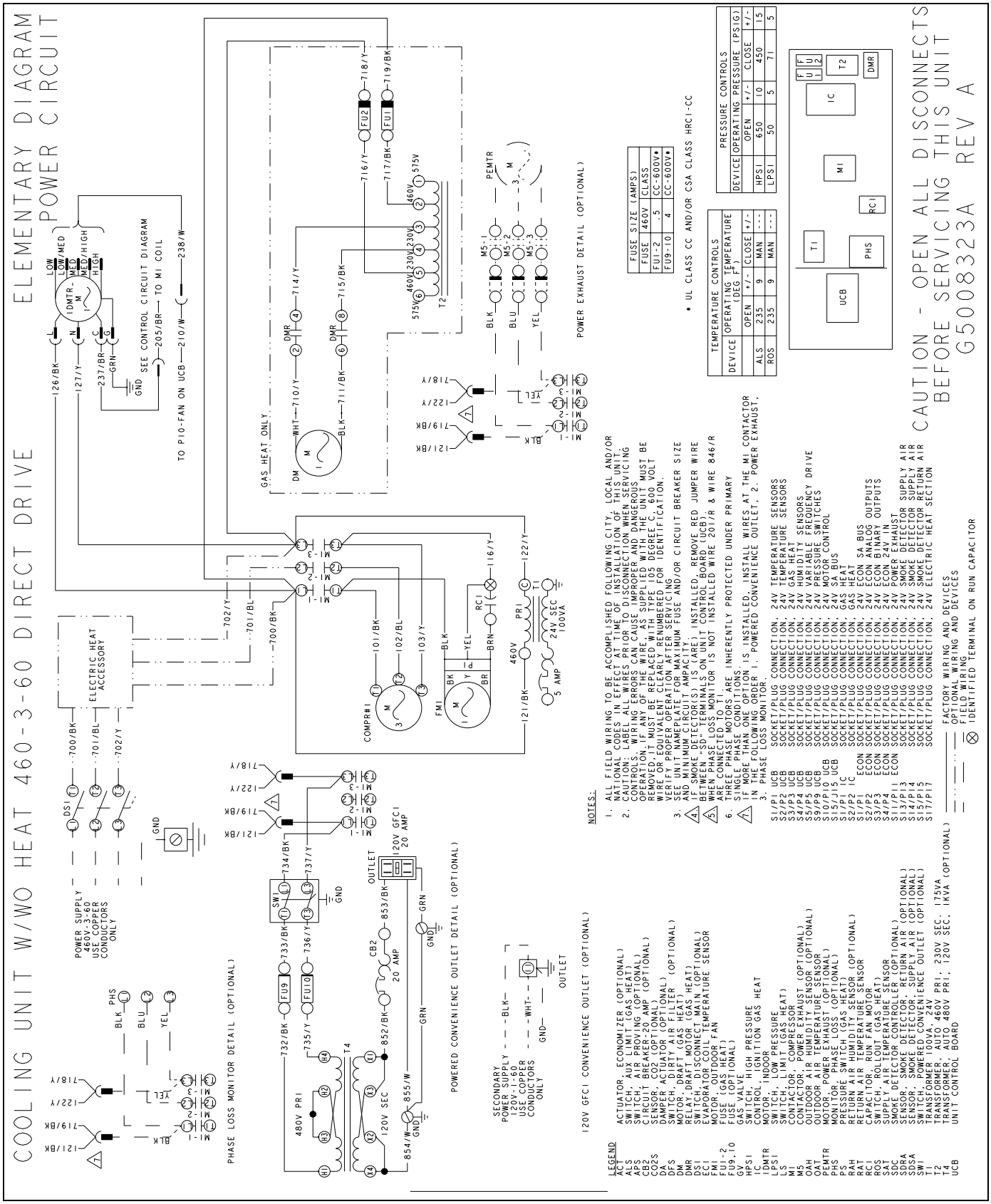

Typical ZY/ZQ04-06 Cooling Unit w/wo Gas Heat 208/230-1-60 Belt Drive Elementary Diagram Power Circuit

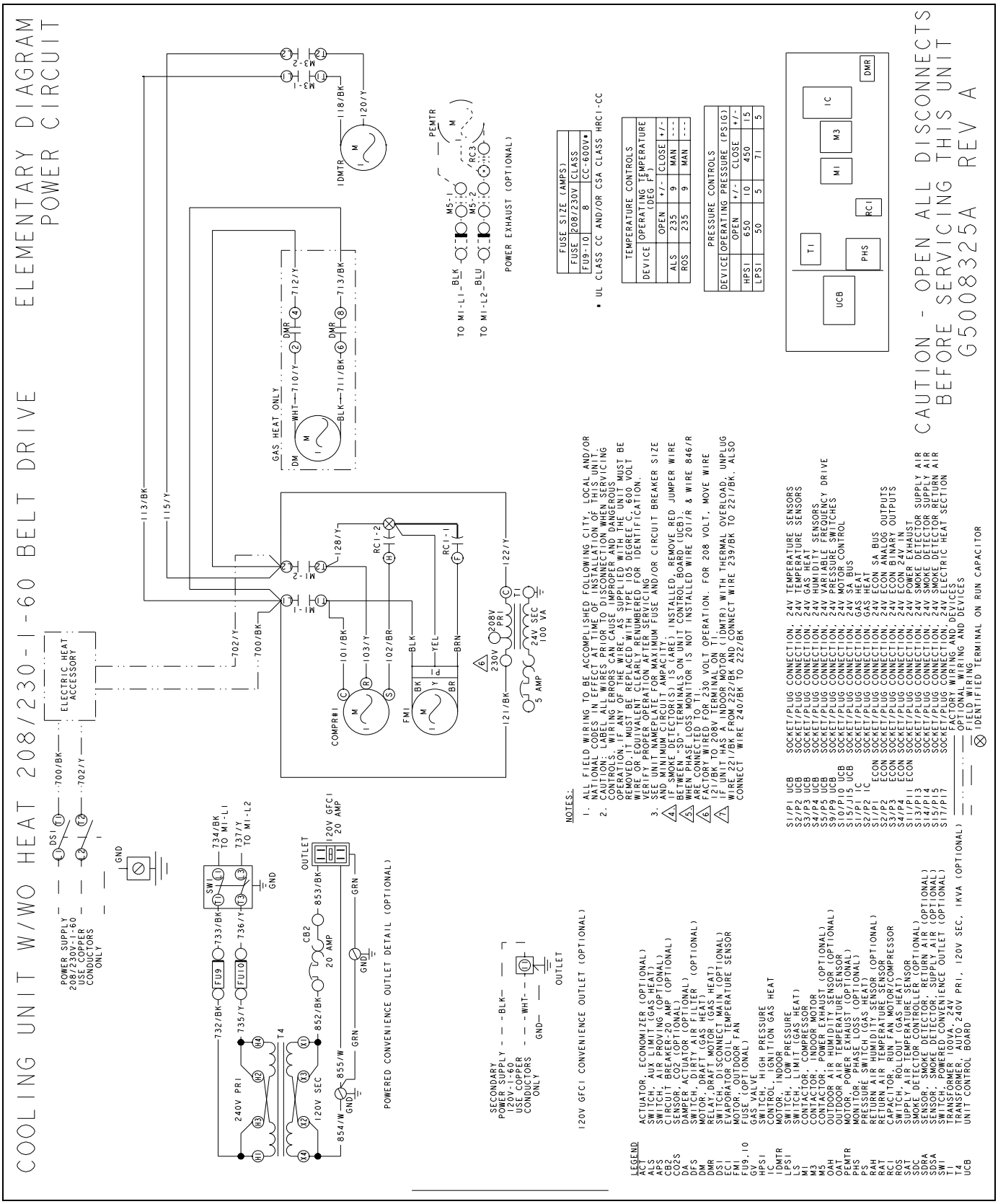

Typical ZXEA7 Cooling Unit w/wo Electric Heat w/wo VFD 208/230-3-60 Belt Drive - Elementary Diagram Power Circuit

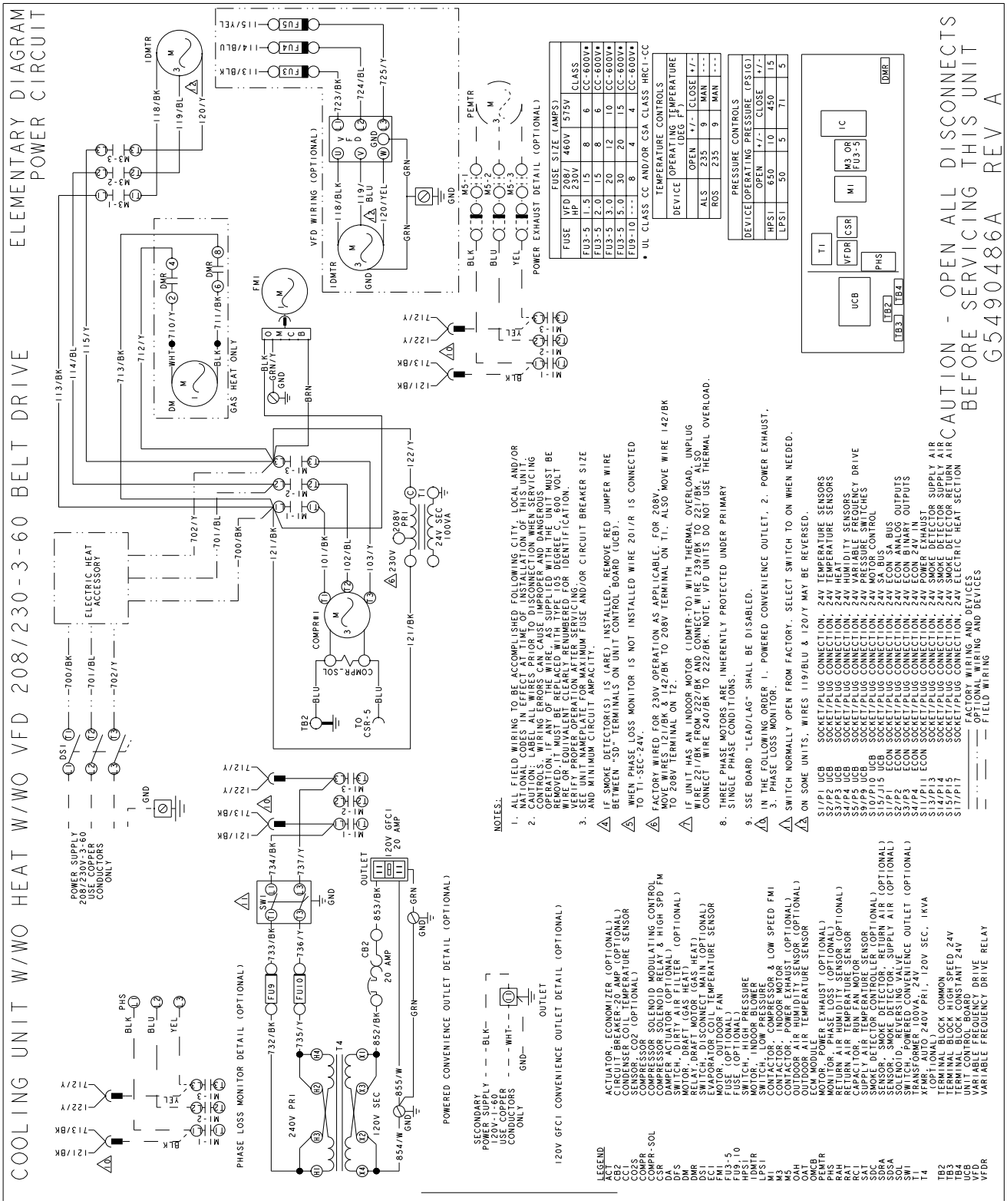

Typical ZXEA7 Cooling Unit w/wo Electric Heat w/wo VFD 460-3-60 Belt Drive - Elementary Diagram Power Circuit

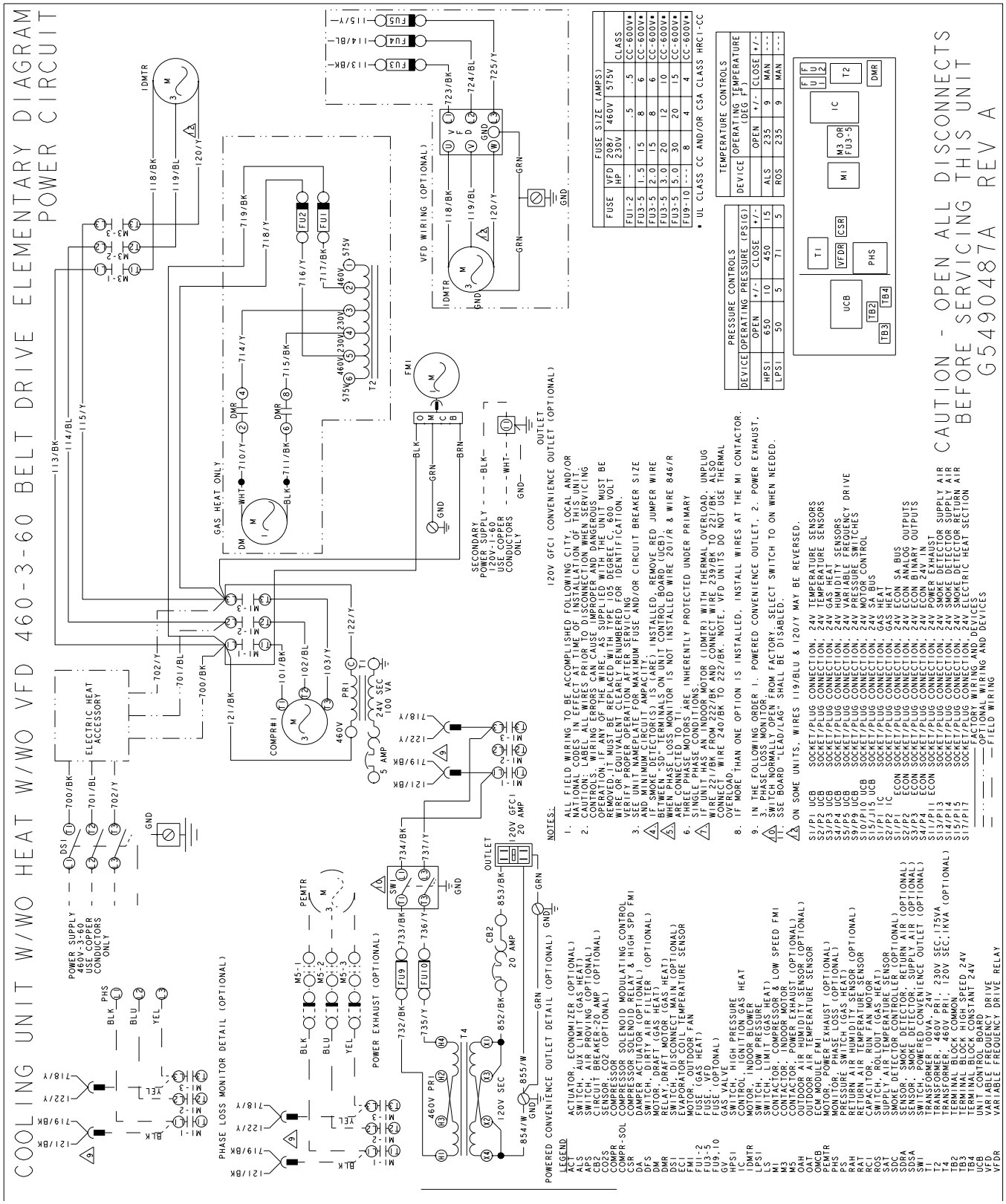

Typical ZXEA7 Cooling Unit w/wo Electric Heat w/wo VFD 575-3-60 Belt Drive - Elementary Diagram Power Circuit

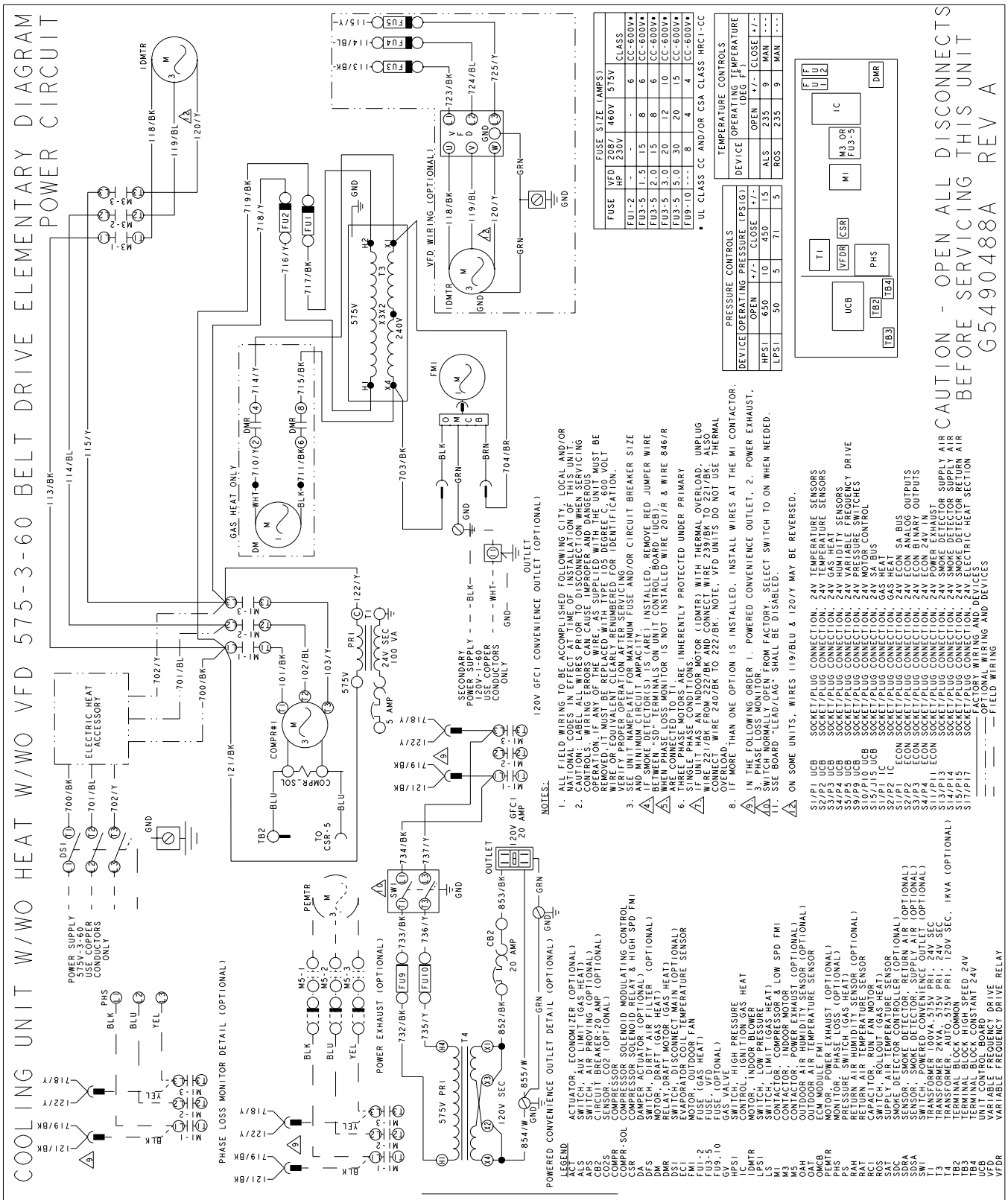

Typical ZX08/ZY04-06/ZQ04-06 Cooling Unit w/wo Gas Heat 208/230-3-60 Belt Drive Elementary Diagram Power Circuit

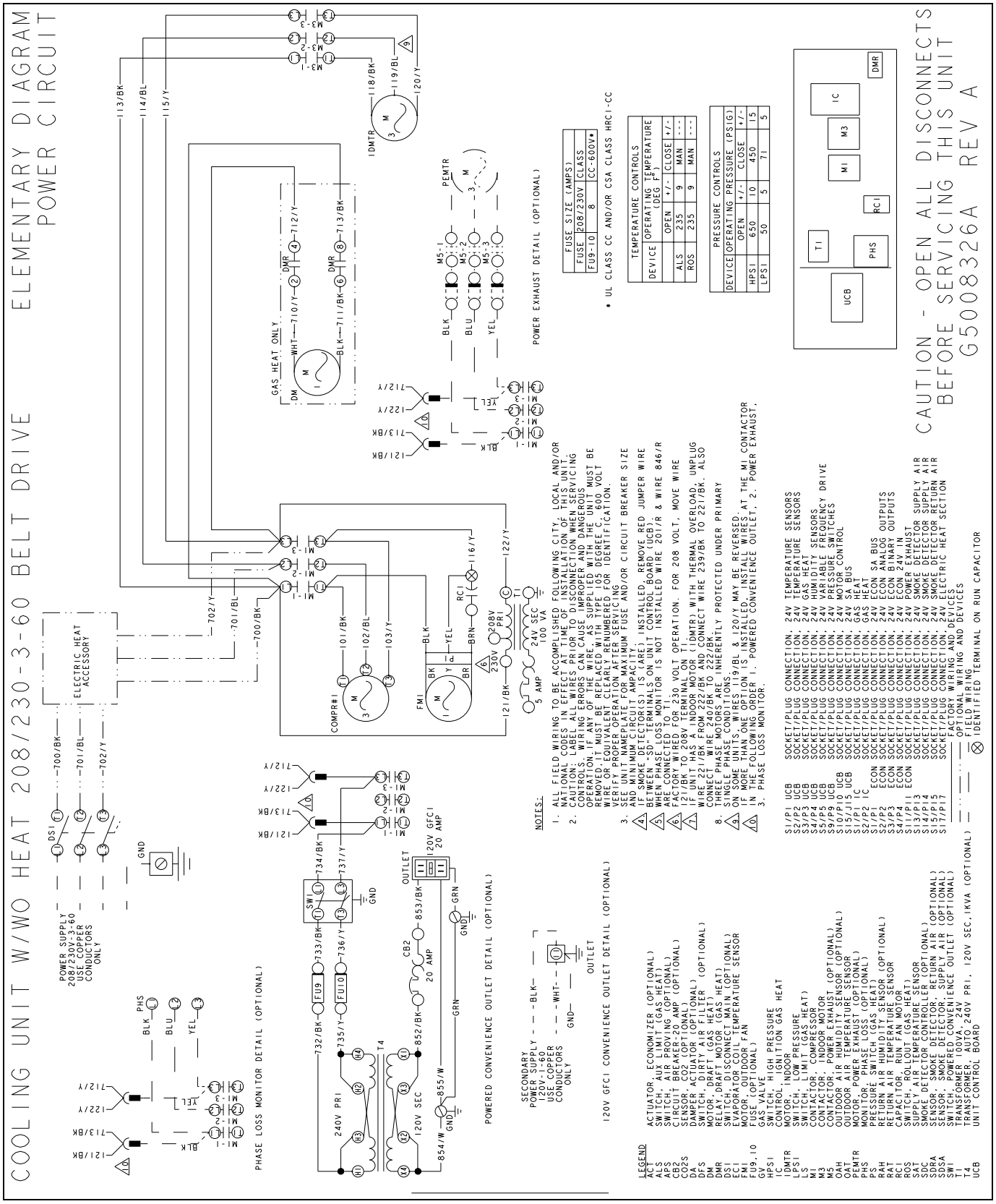

Typical ZX09/ZY07 Cooling Unit w/wo Gas Heat 208/230-3-60 Belt Drive Elementary Diagram Power Circuit

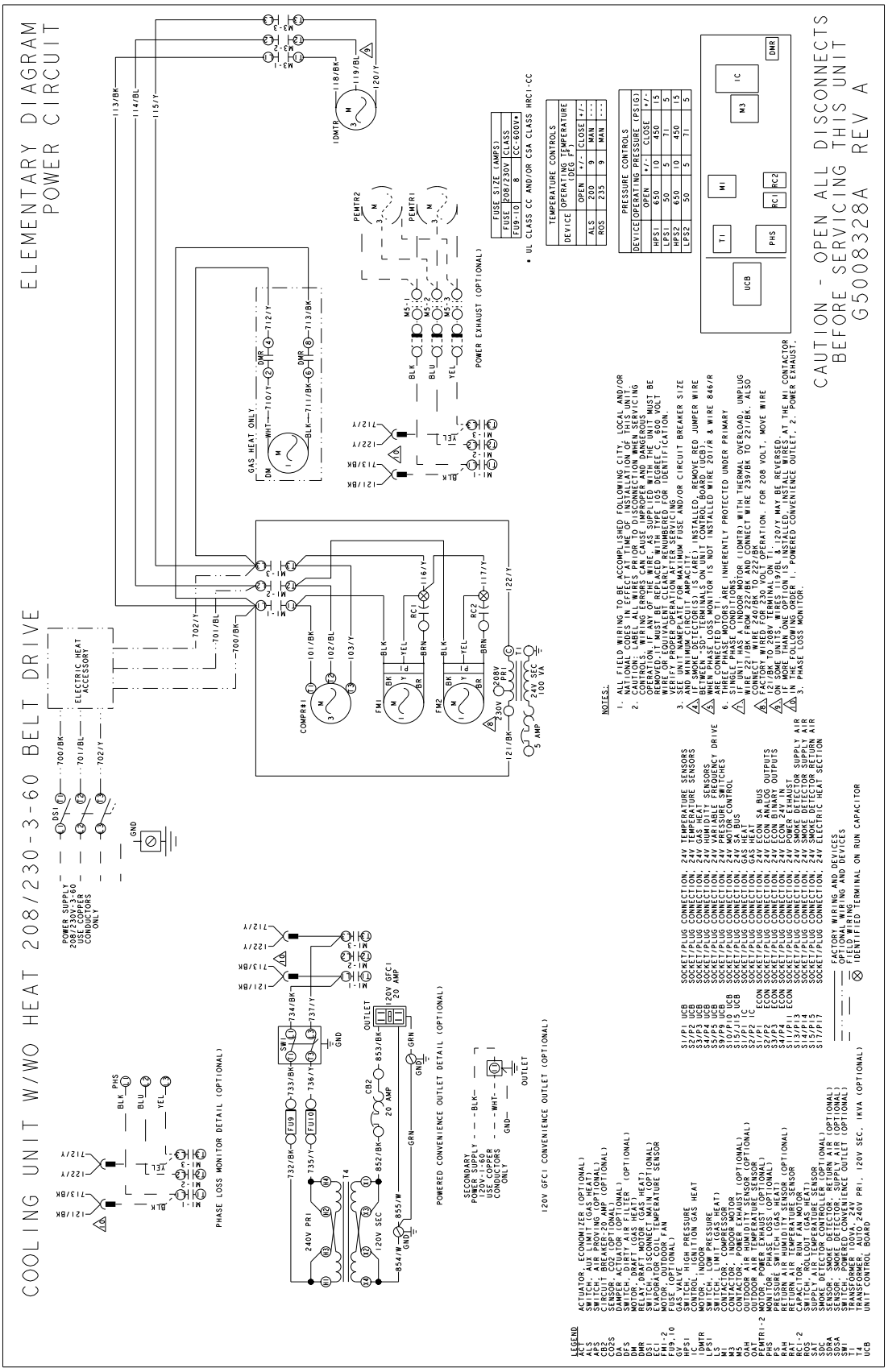

Typical ZYEA7 Cooling Unit w/wo Electric Heat w/wo VFD 208/230-3-60 Belt Drive - Elementary Diagram Power Circuit

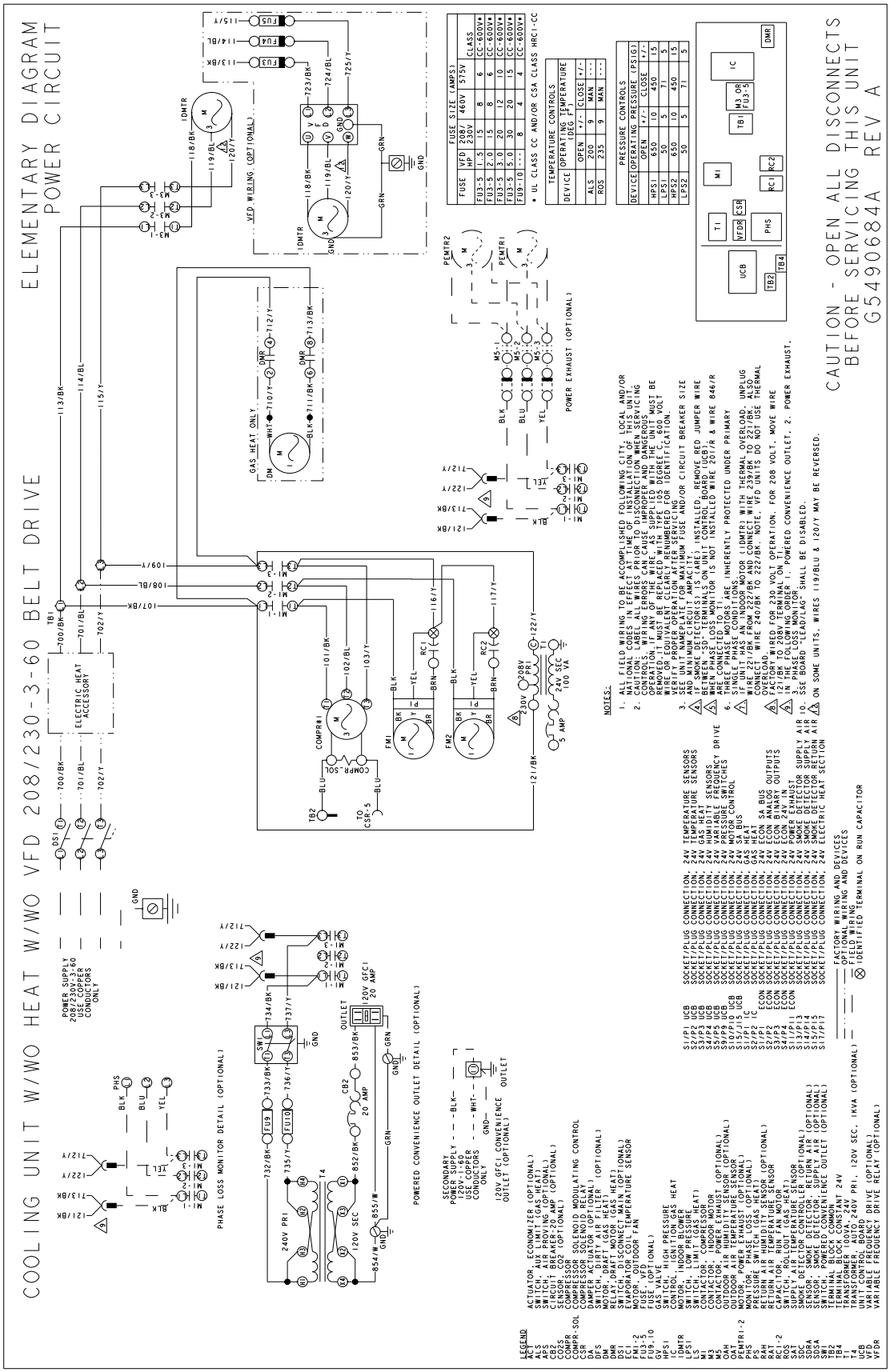

Typical ZYEA7 Cooling Unit w/wo Electric Heat w/wo VFD 460/575-3-60 Belt Drive - Elementary Diagram Power Circuit

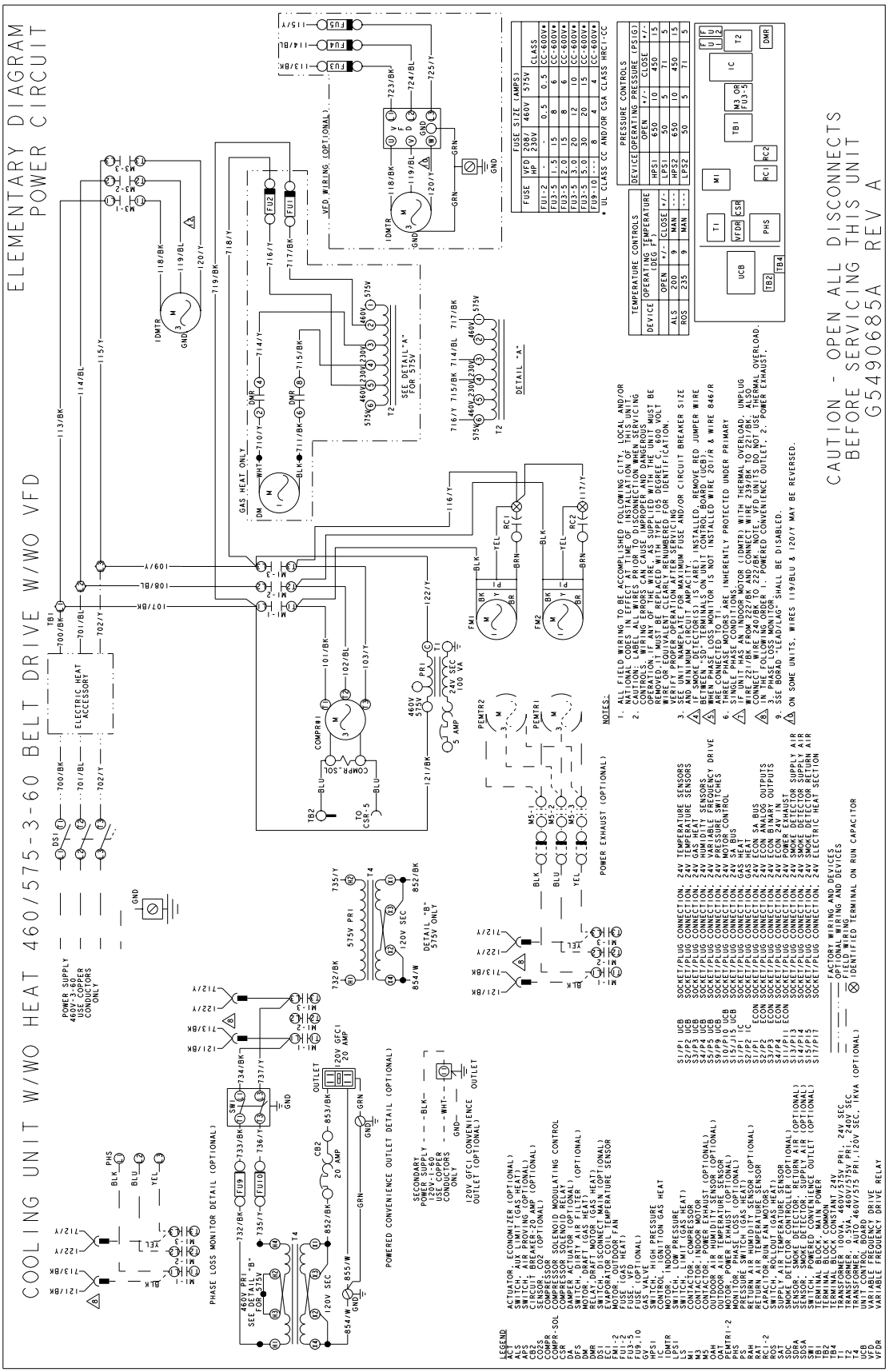

Typical ZX12/ZY08, 09 Cooling Unit w/wo Gas Heat 208/230-3-60 Belt Drive Elementary Diagram Power Circuit

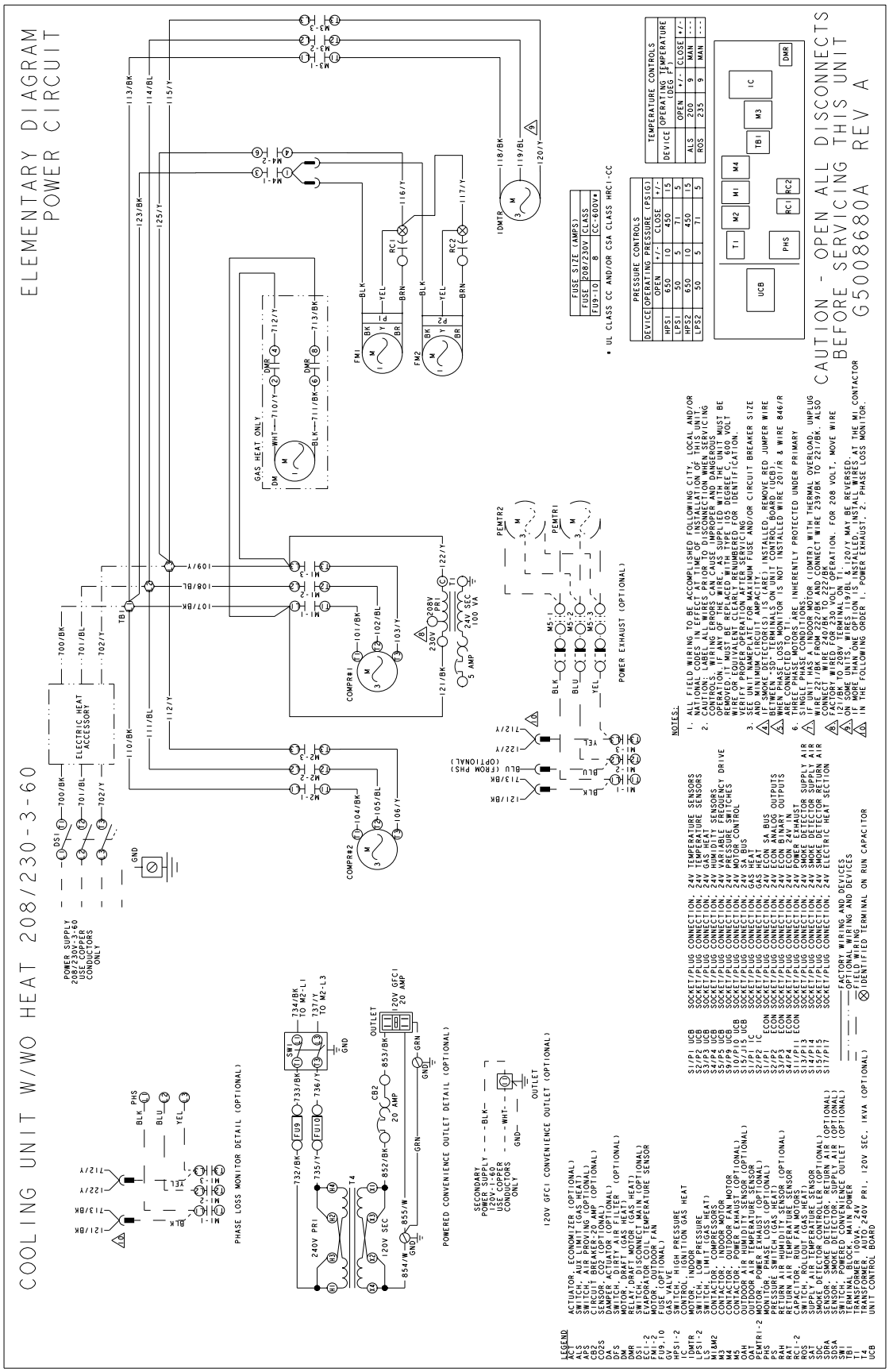

Typical ZX14/ZY12 Cooling Unit w/wo Gas Heat 208/230-3-60 Belt Drive Elementary Diagram Power Circuit

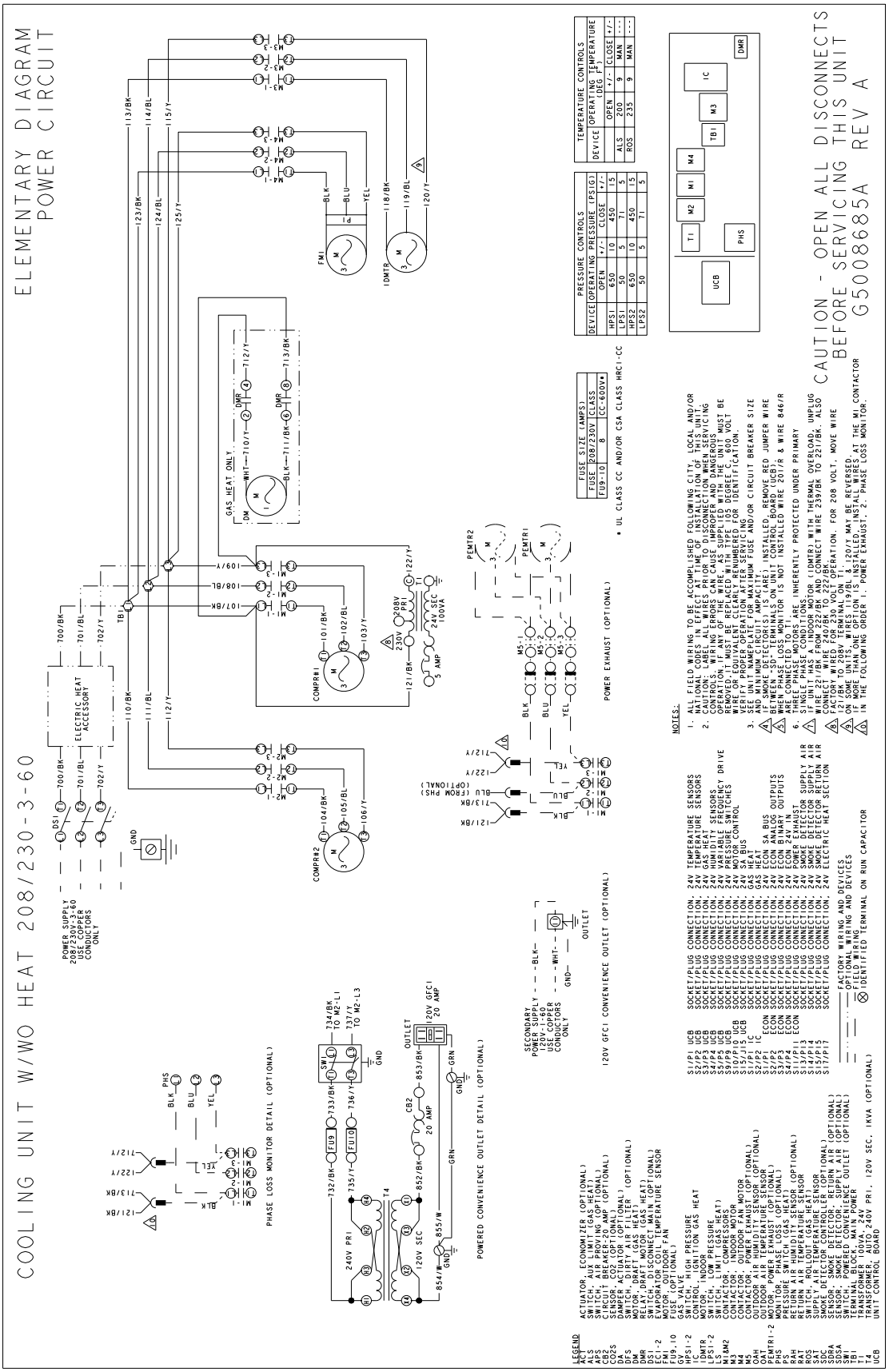

Typical ZX08/ZY04-06/ZQ04-06 Cooling Unit w/wo Gas Heat 460/575-3-60 Belt Drive Elementary Diagram Power Circuit

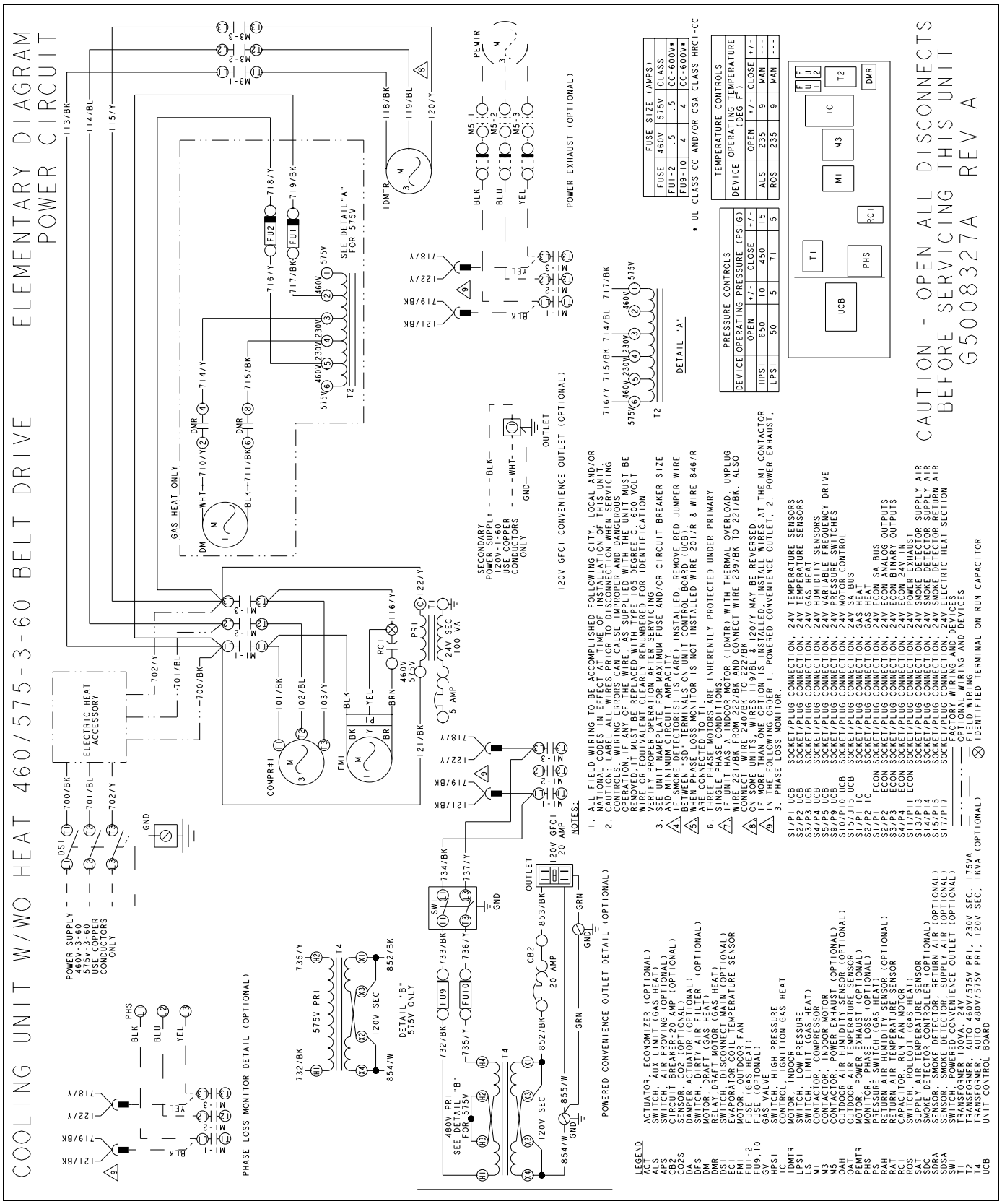

Typical ZX09/ZY07 Cooling Unit w/wo Gas Heat 460/575-3-60 Belt Drive Elementary Diagram Power Circuit

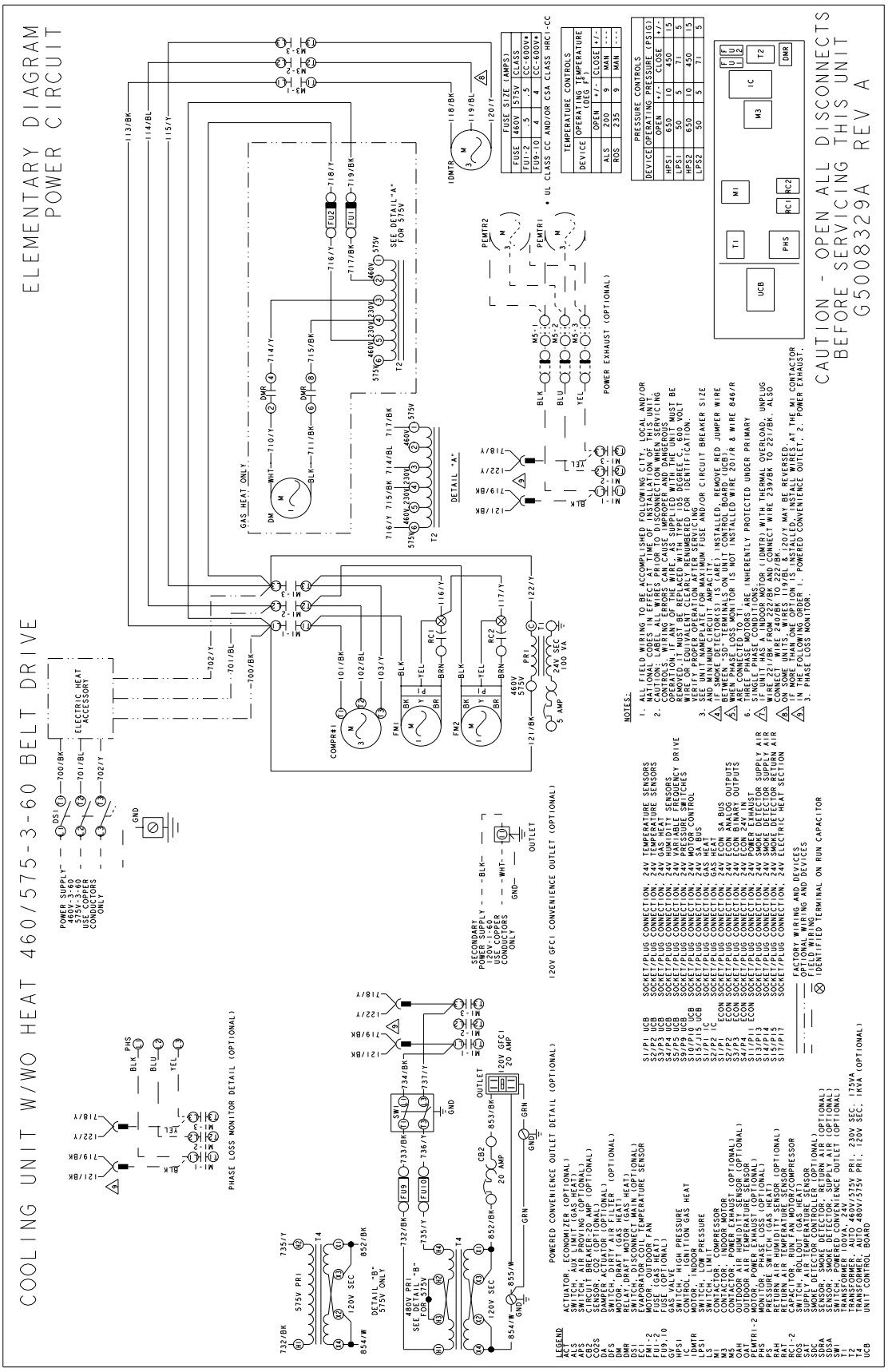

Typical ZX12/ZY08, 09 Cooling Unit w/wo Gas Heat 460/575-3-60 Belt Drive Elementary Diagram Power Circuit

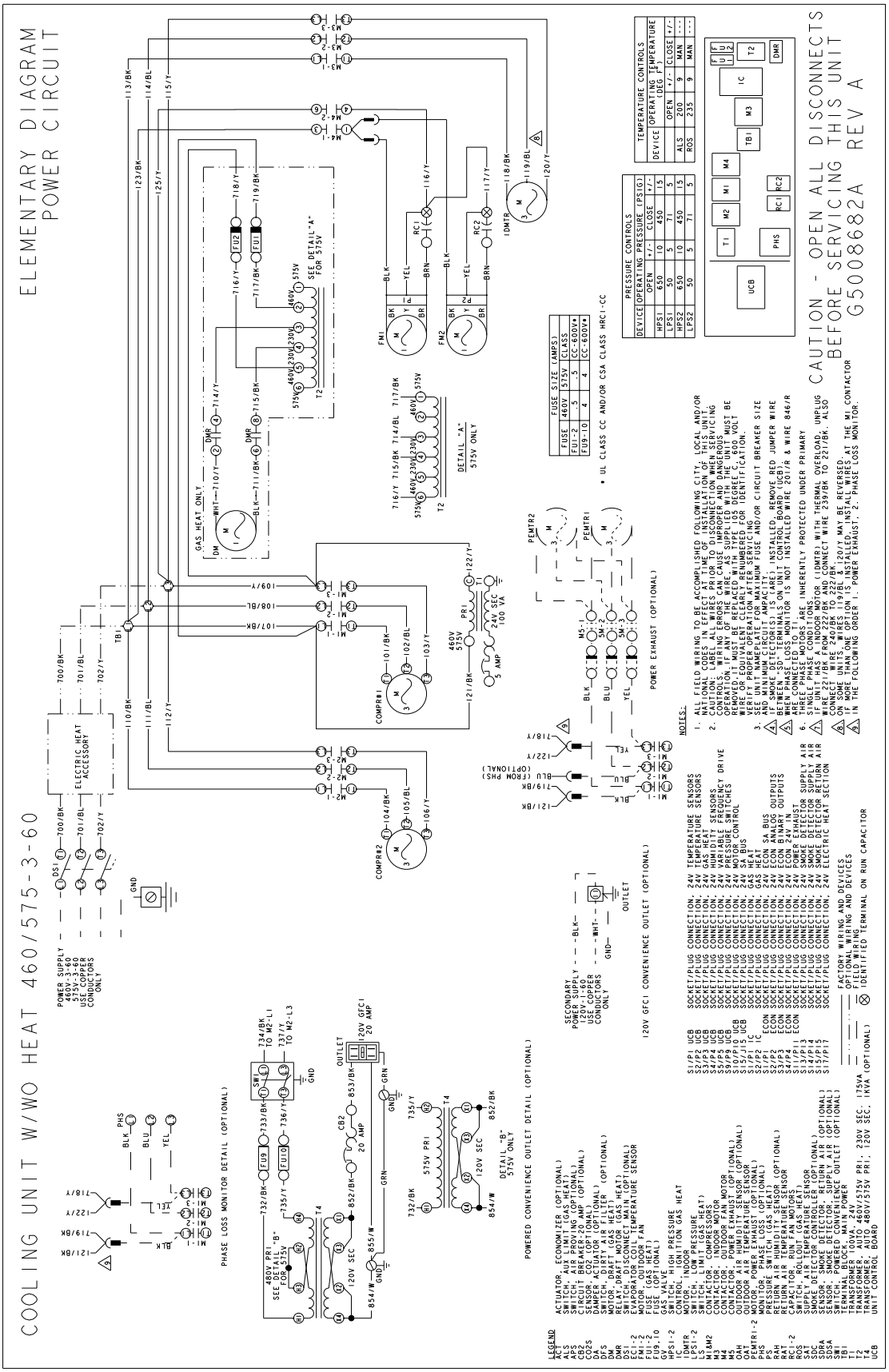

Typical ZX14/ZY12 Cooling Unit w/wo Gas Heat 460/575-3-60 Belt Drive Elementary Diagram Power Circuit

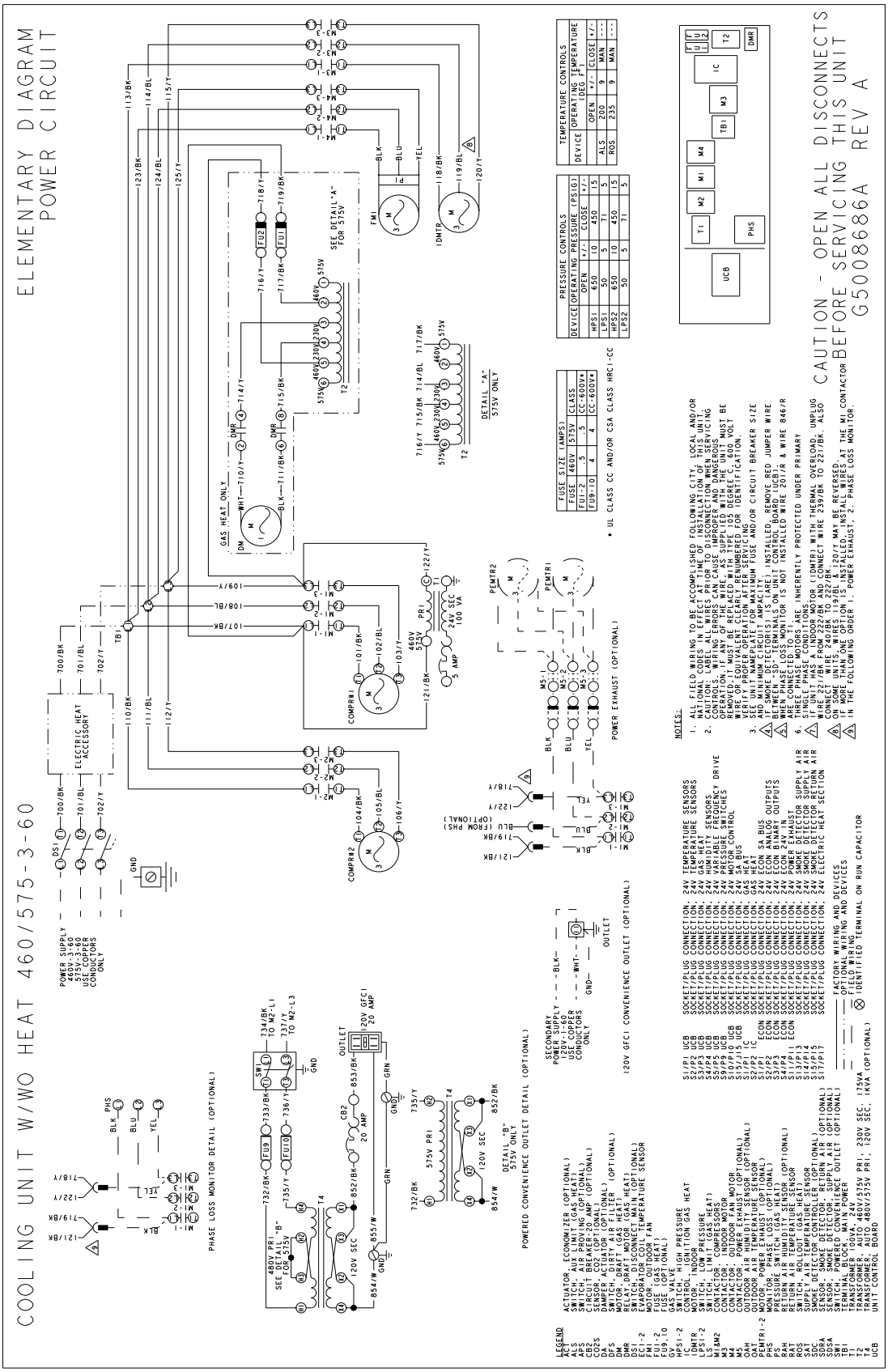

Typical ZX12/ZY08, 09 Cooling Unit with VFD w/wo Gas Heat 208/230-3-60 Belt Drive Elementary Diagram Power Circuit

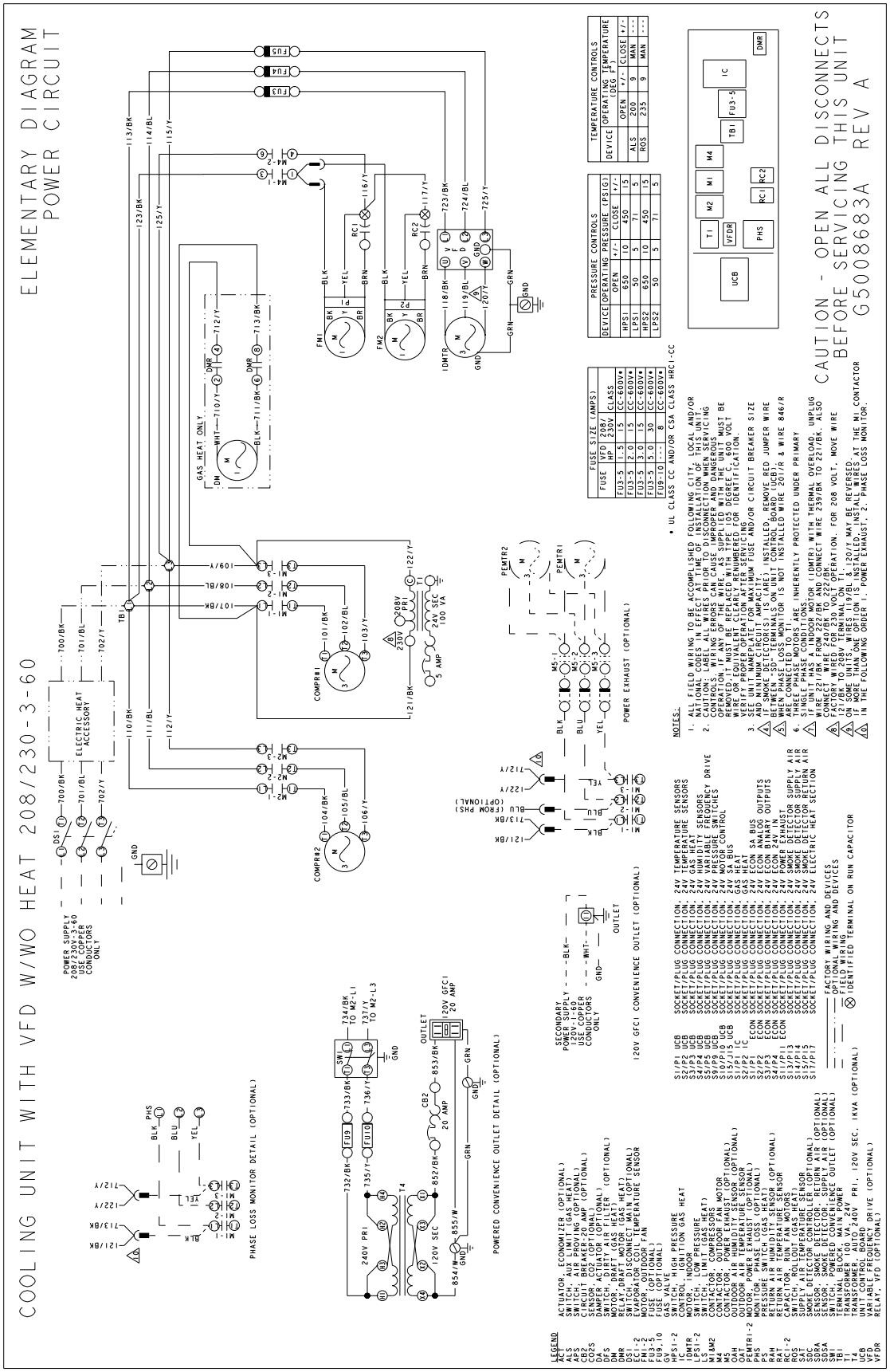

Typical ZX14/ZY12 Cooling Unit with VFD w/wo Gas Heat 208/230-3-60 Belt Drive Elementary Diagram Power Circuit

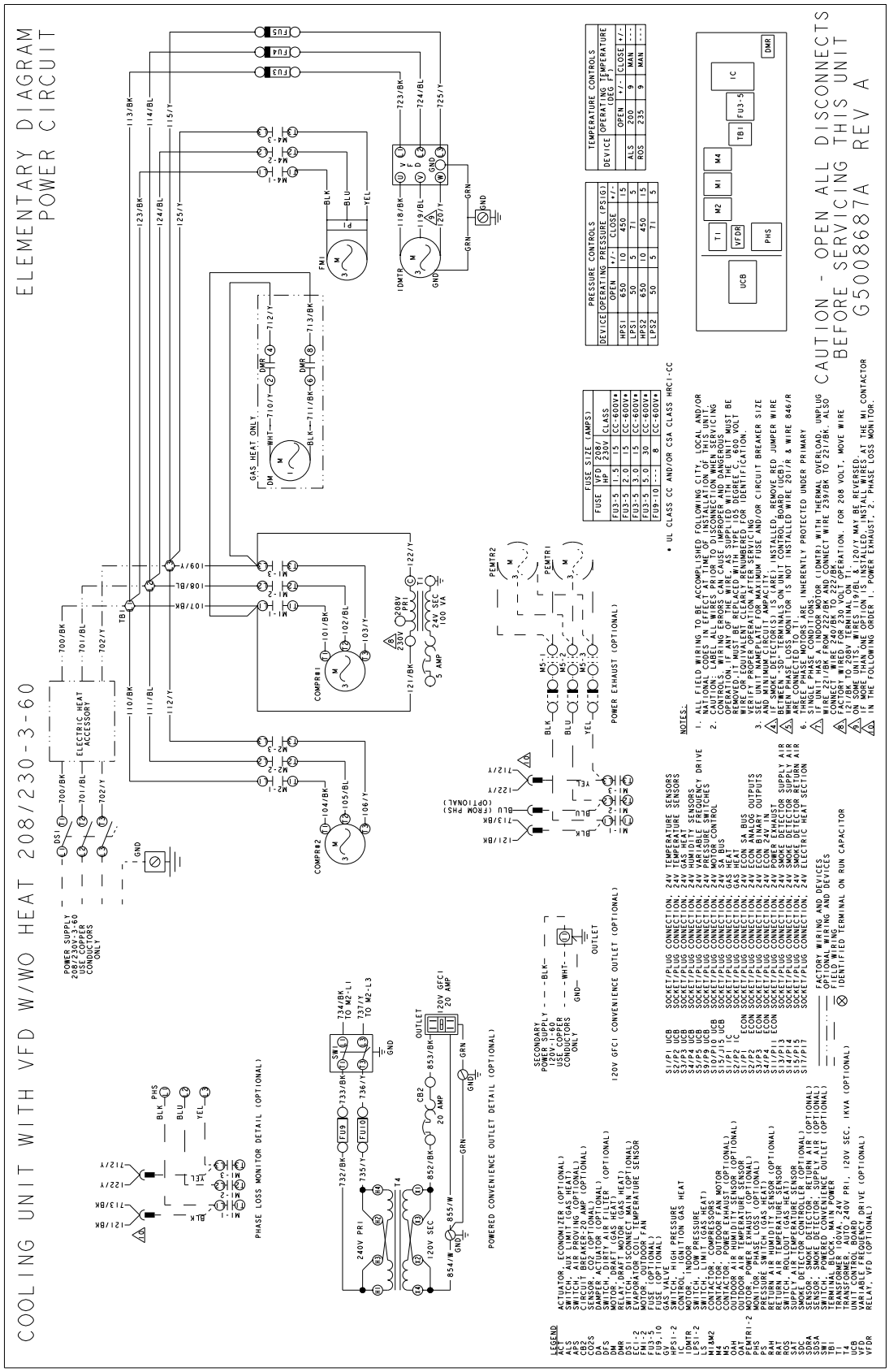

Typical ZX12/ZY08, 09 Cooling Unit with VFD w/wo Gas Heat 460/575-3-60 Belt Drive Elementary Diagram Power Circuit

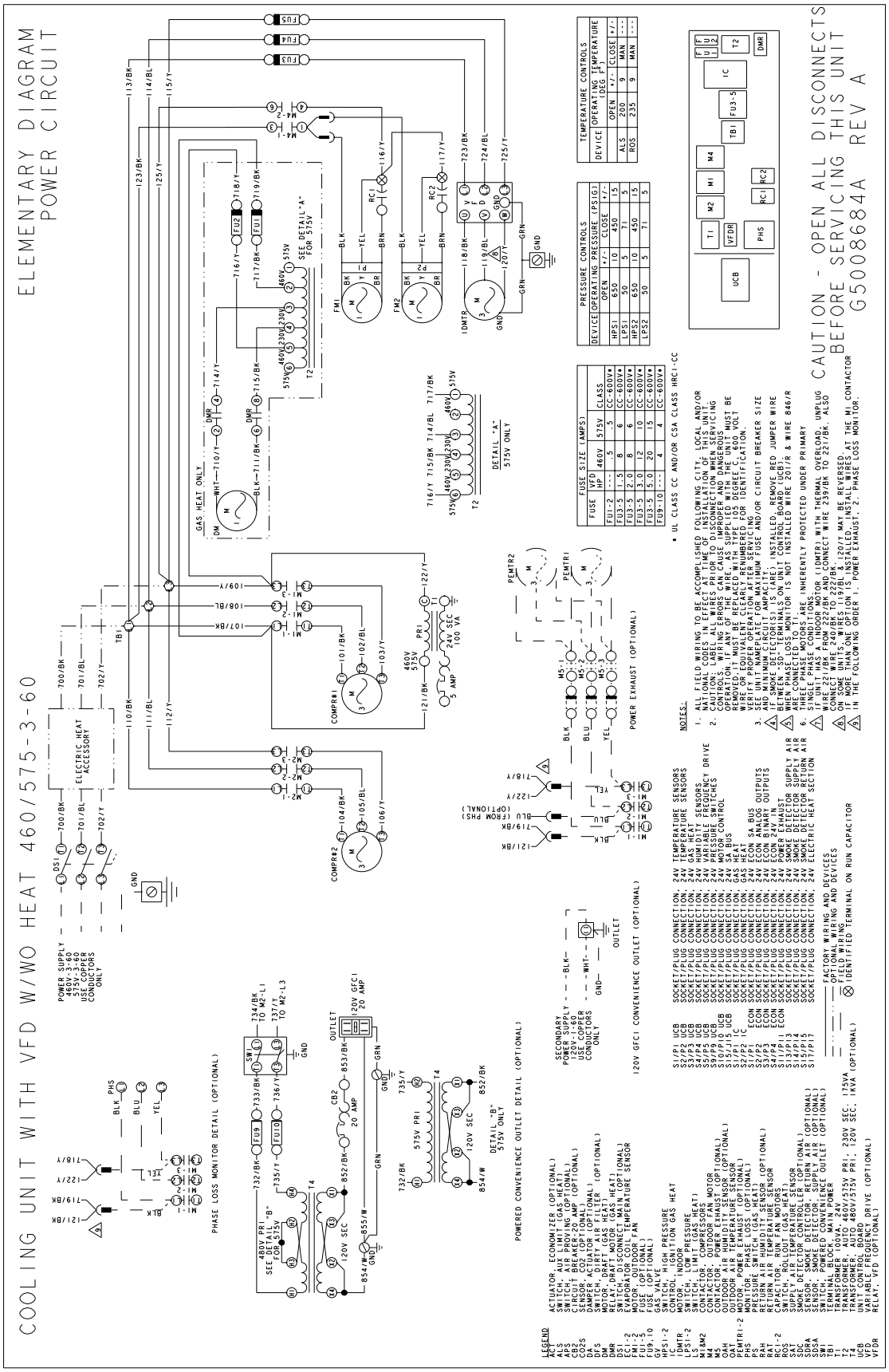

Typical ZX14/ZY12 Cooling Unit with VFD w/wo Gas Heat 460/575-3-60 Belt Drive Elementary Diagram Power Circuit

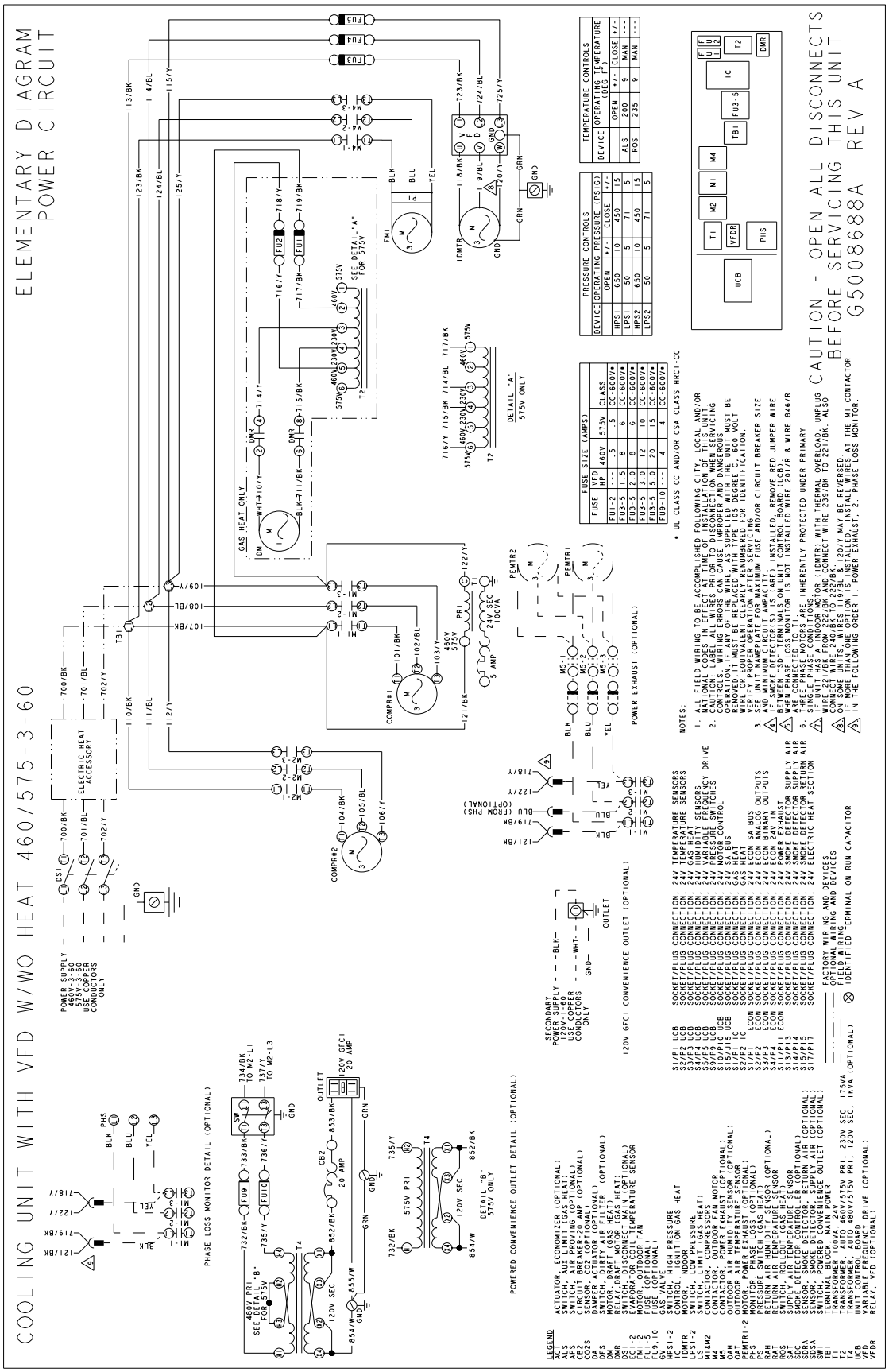

Typical ZY/ZQ04-06 Cooling Unit w Gas Heat 208/230-1-60 Direct Drive Elementary Diagram Power Circuit for FER

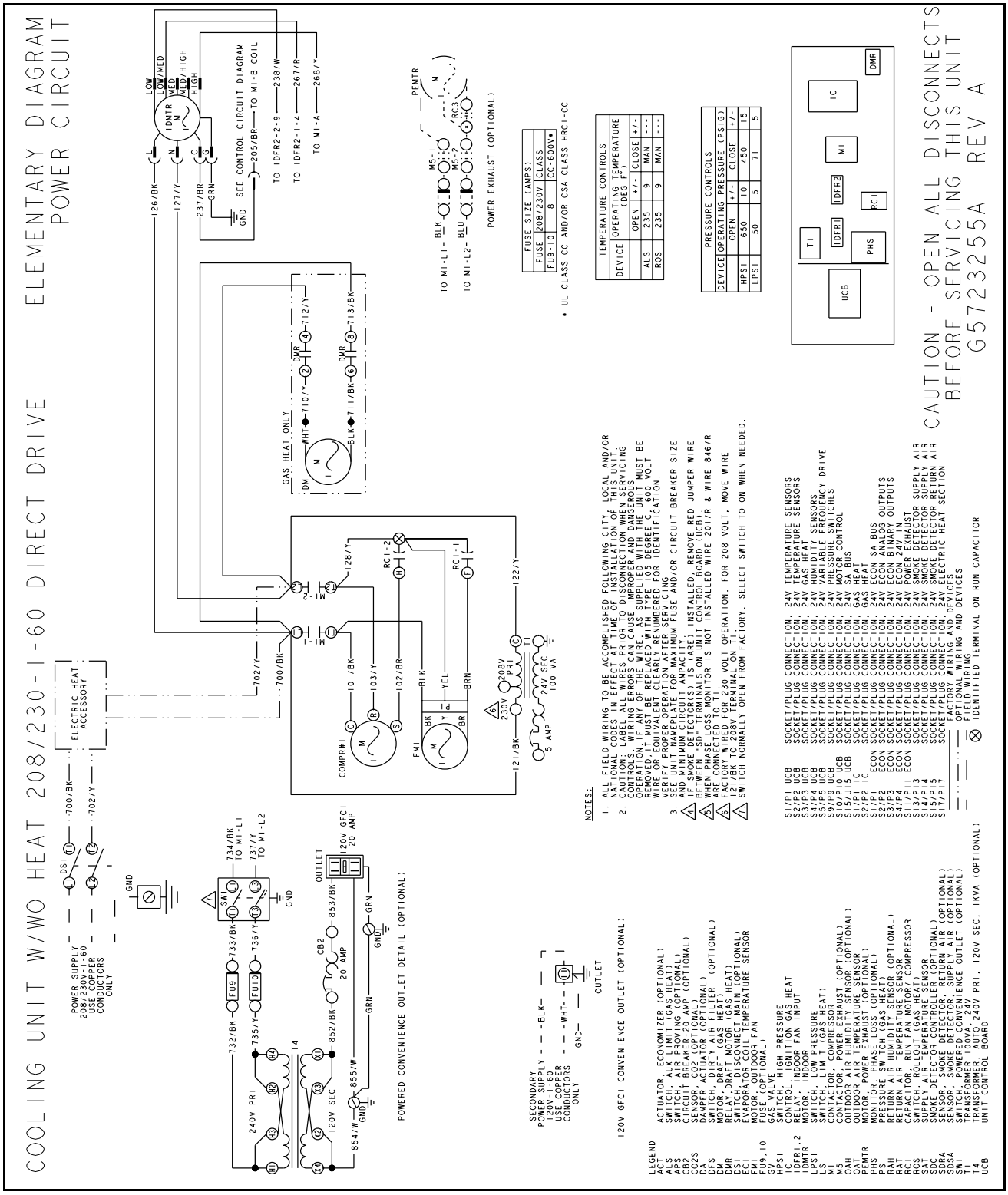

Typical ZY/ZQ04-06 Cooling Unit Direct Drive Elementary Diagram Control Circuit

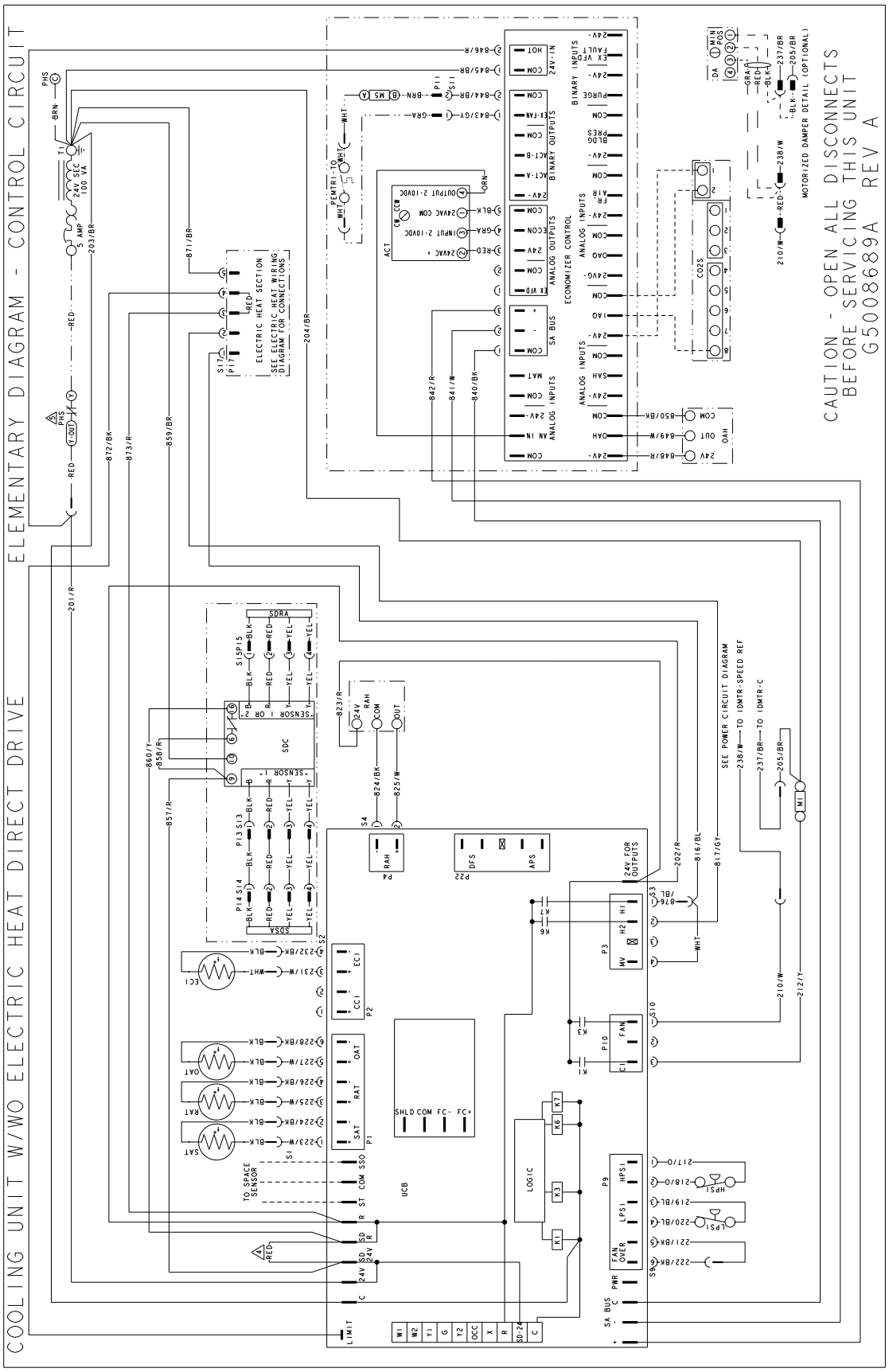

Typical ZY/ZQ04-06 Cooling Unit with Gas Heat Direct Drive Elementary Diagram Control Circuit

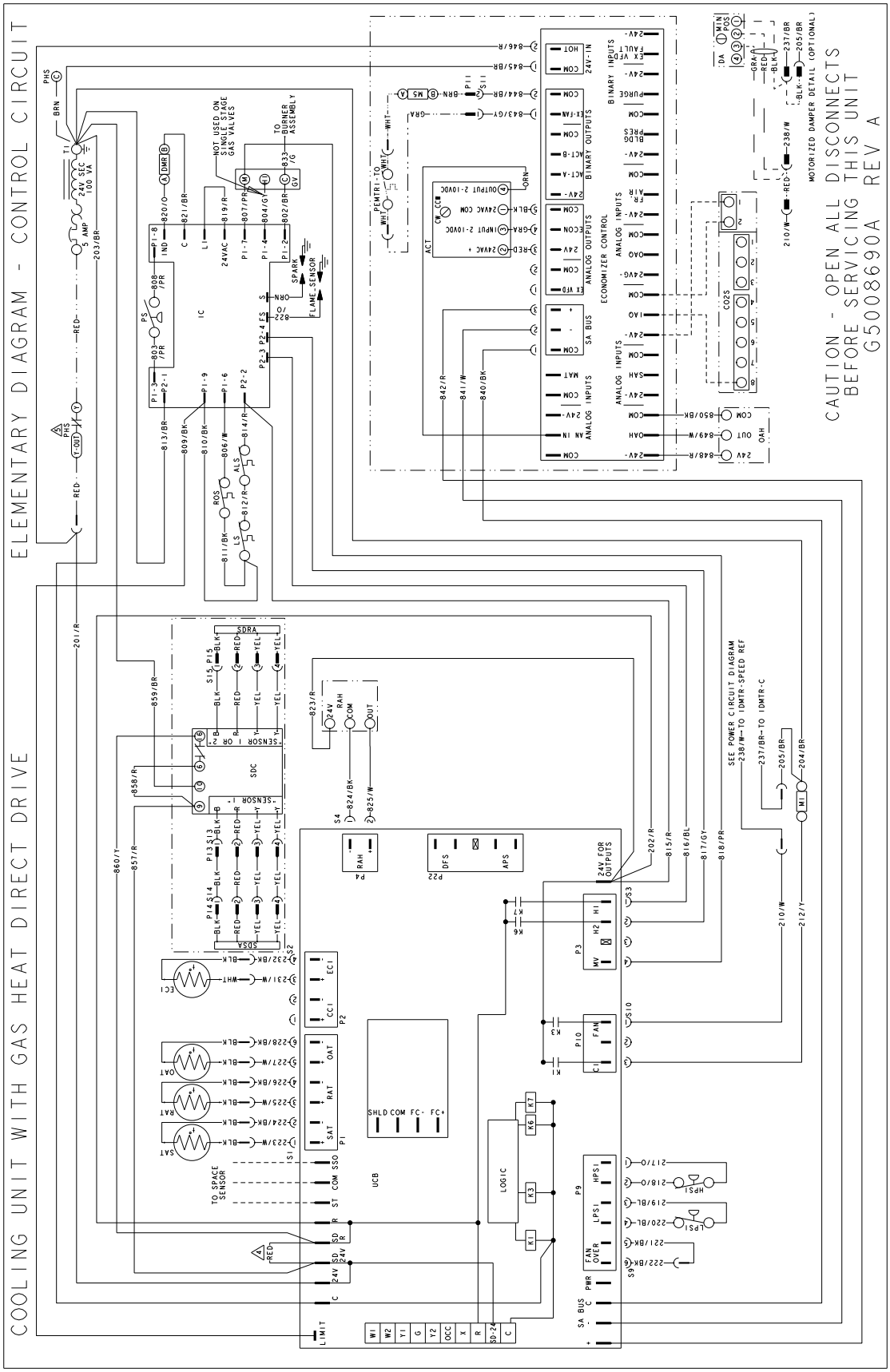

Typical ZXEA7 Cooling Unit w/wo Electric Heat w/wo VFD Belt Drive - Elementary Diagram Control Circuit

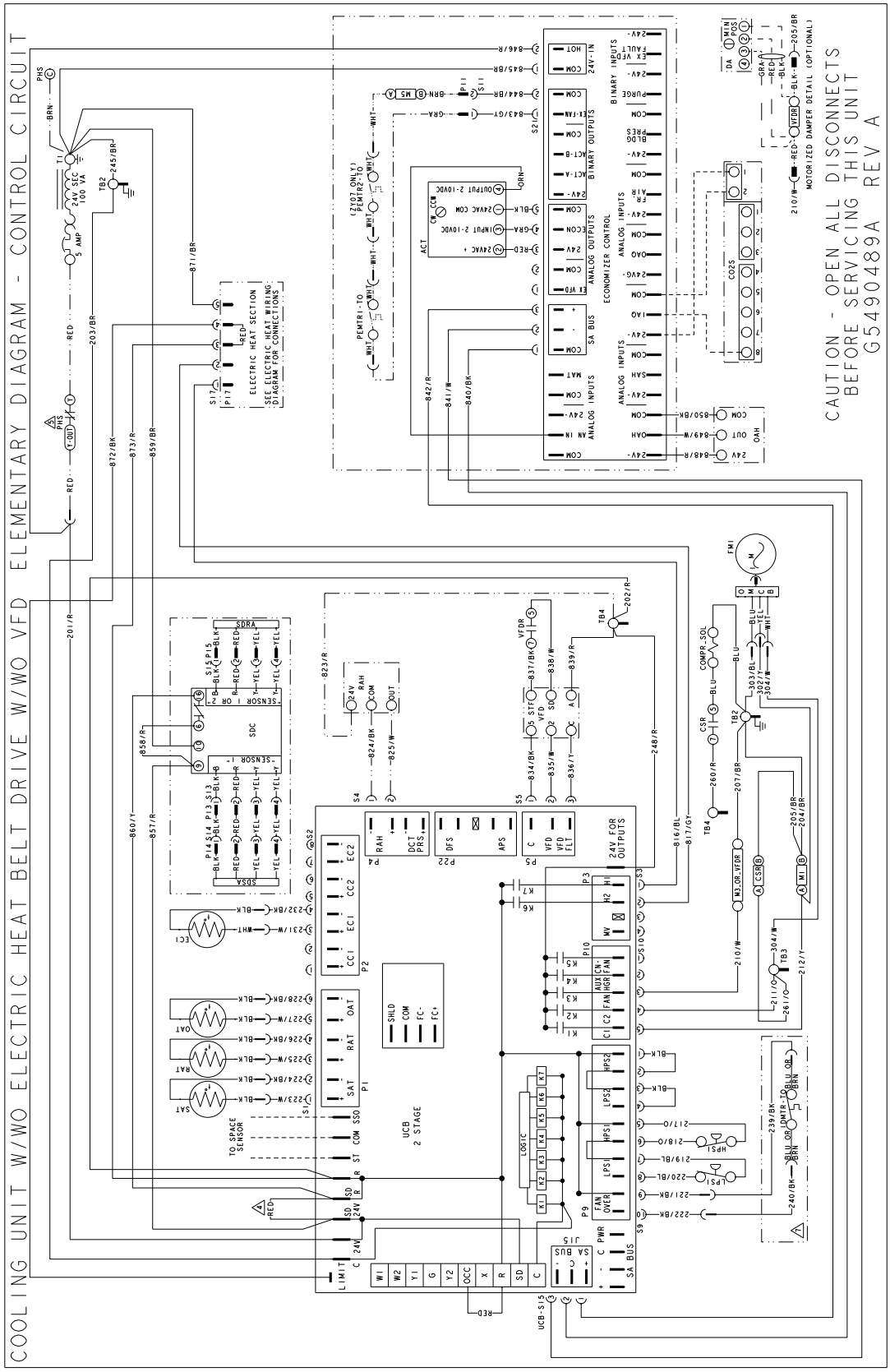

Typical ZXA7 Cooling Unit with Gas Heat w/wo VFD Belt Drive - Elementary Diagram Control Circuit

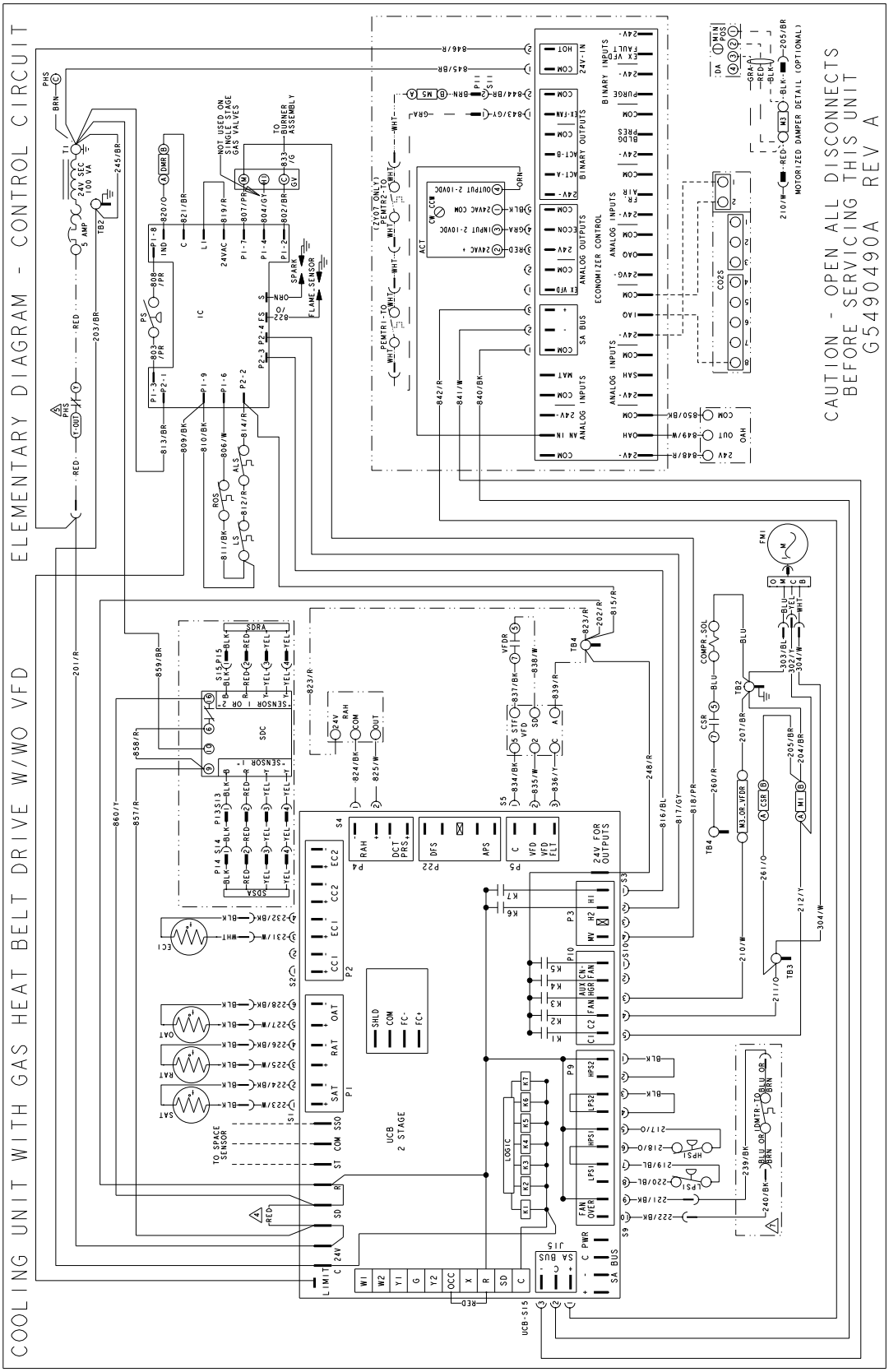

Typical ZYEA7 Cooling Unit w/wo Electric Heat w/wo VFD Belt Drive - Elementary Diagram Control Circuit

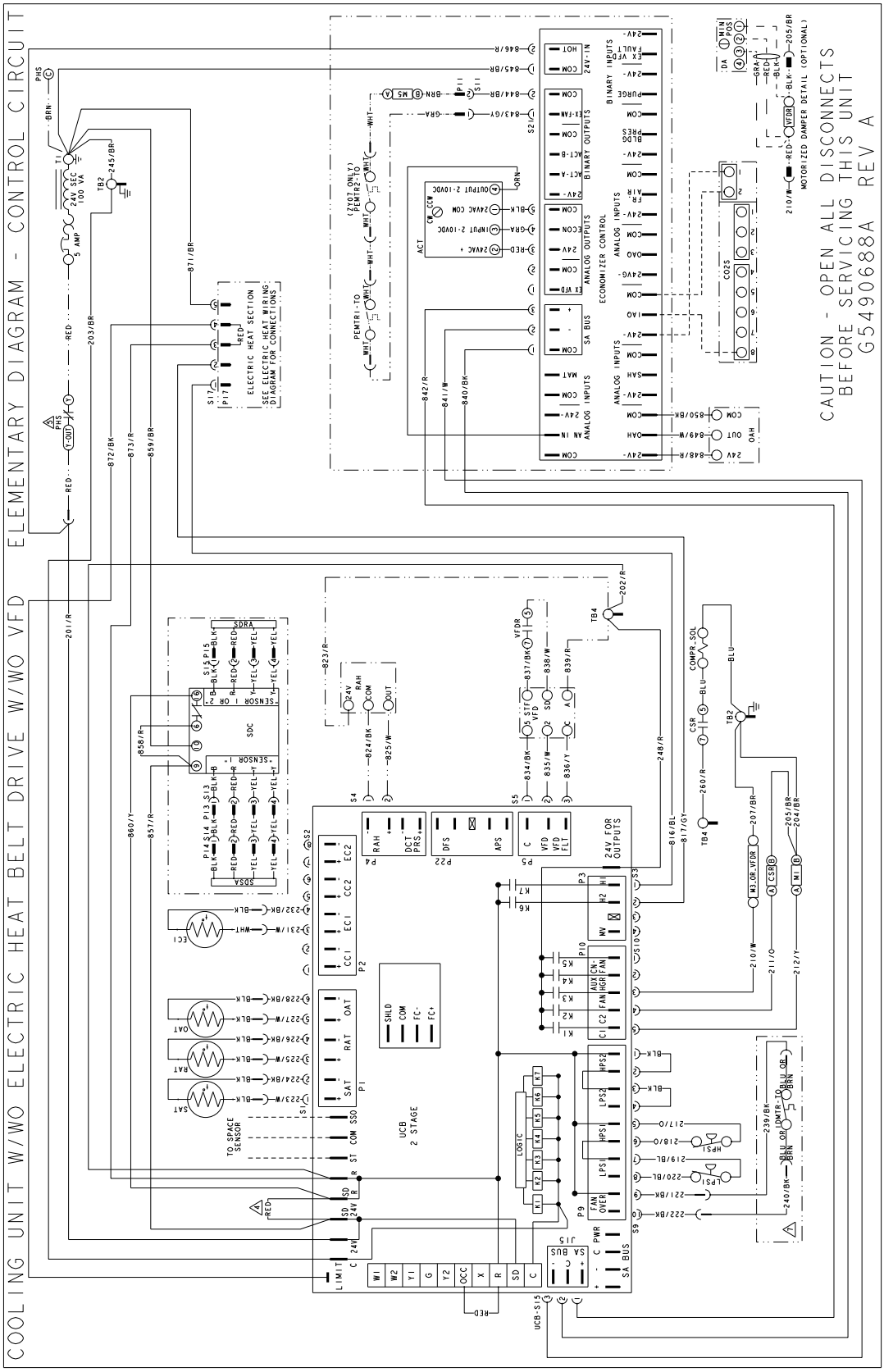

Typical ZYA7 Cooling Unit with Gas Heat w/wo VFD Belt Drive - Elementary Diagram Control Circuit

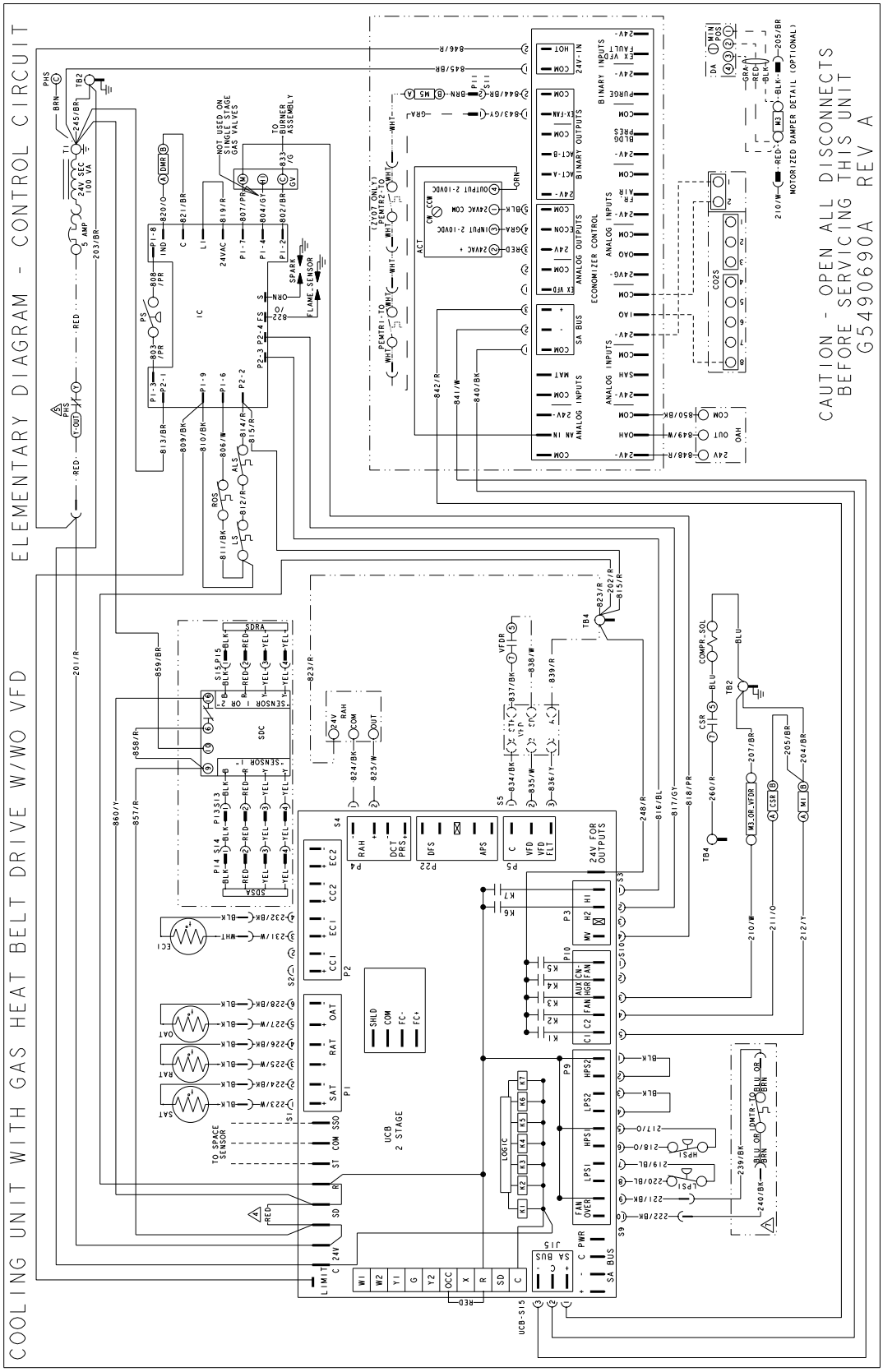

Typical ZX08-09/ZY04-07/ZQ04-06 Cooling Unit Belt Drive Elementary Diagram Control Circuit

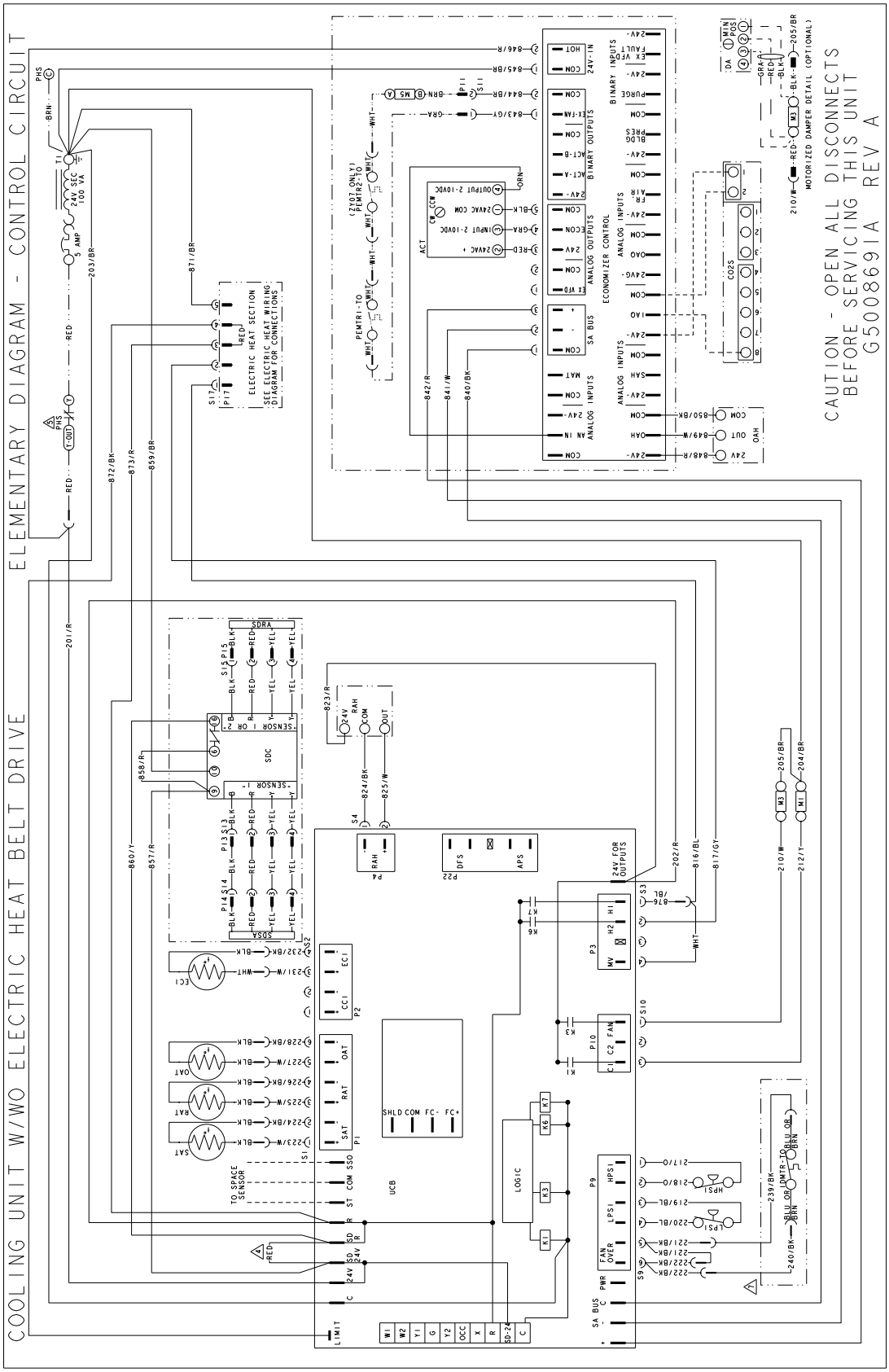

Typical ZX08-09/ZY04-07/ZQ04-06 Cooling Unit with Gas Heat Belt Drive Elementary Diagram Control Circuit

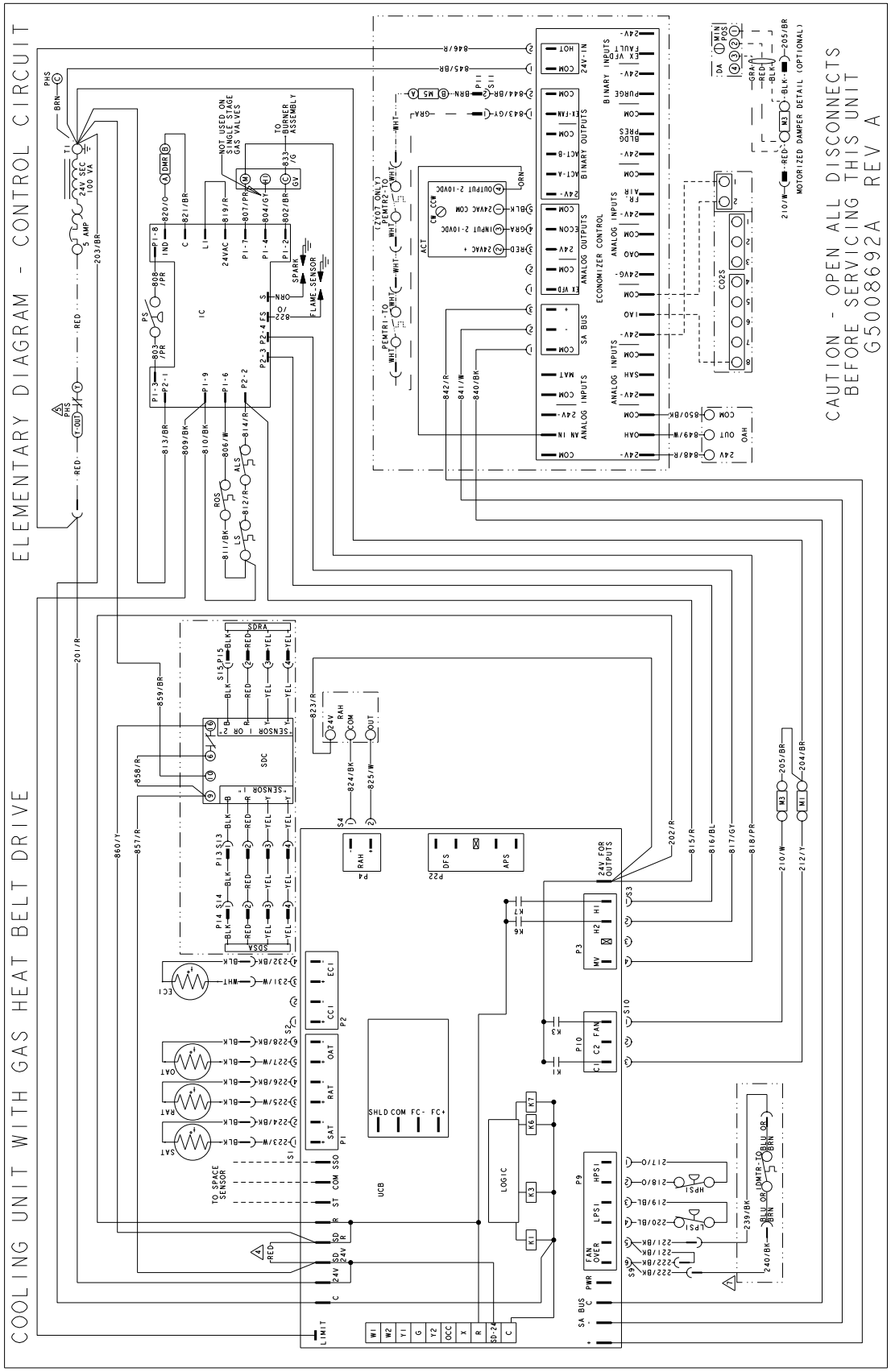

Typical ZX12, 14/ZY09-12 Cooling Unit Belt Drive w/wo VFD Elementary Diagram Control Circuit

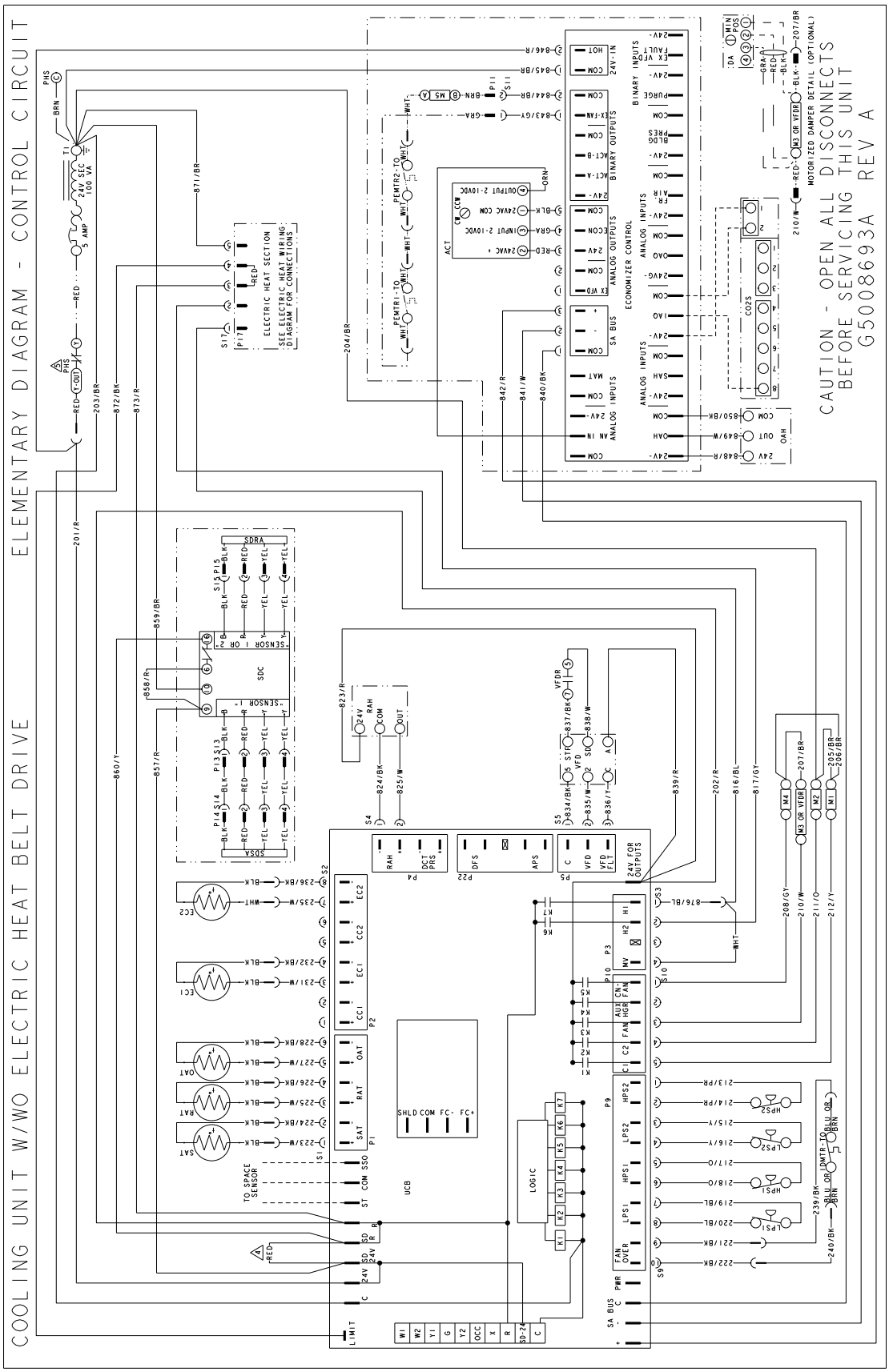

Typical ZX12, 14/ZY09-12 Cooling Unit with Gas Heat Belt Drive w/wo VFD Elementary Diagram Control Circuit

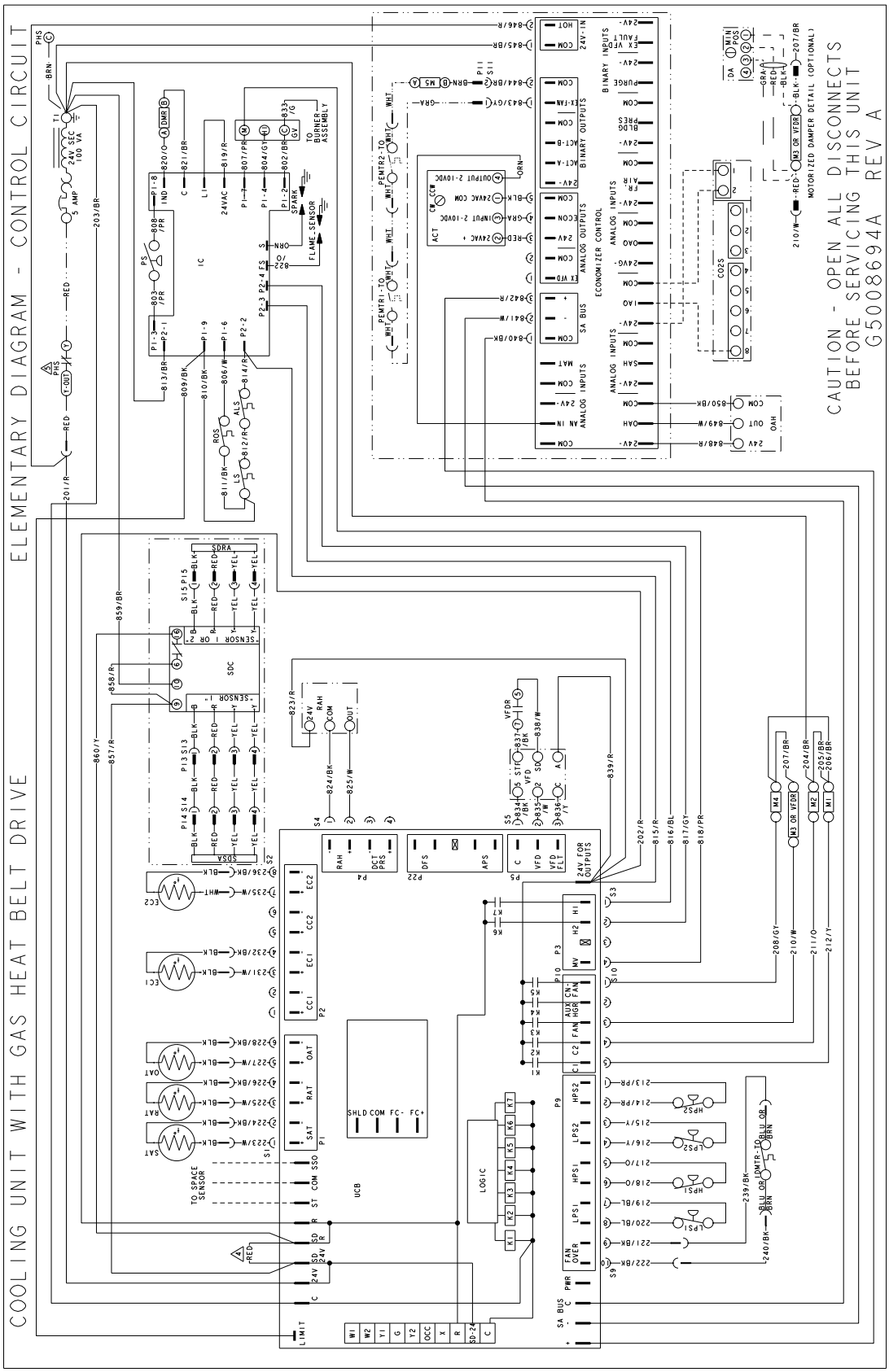

Typical ZL08-14 BAS Controls - Surveyor with 3 Stage Control

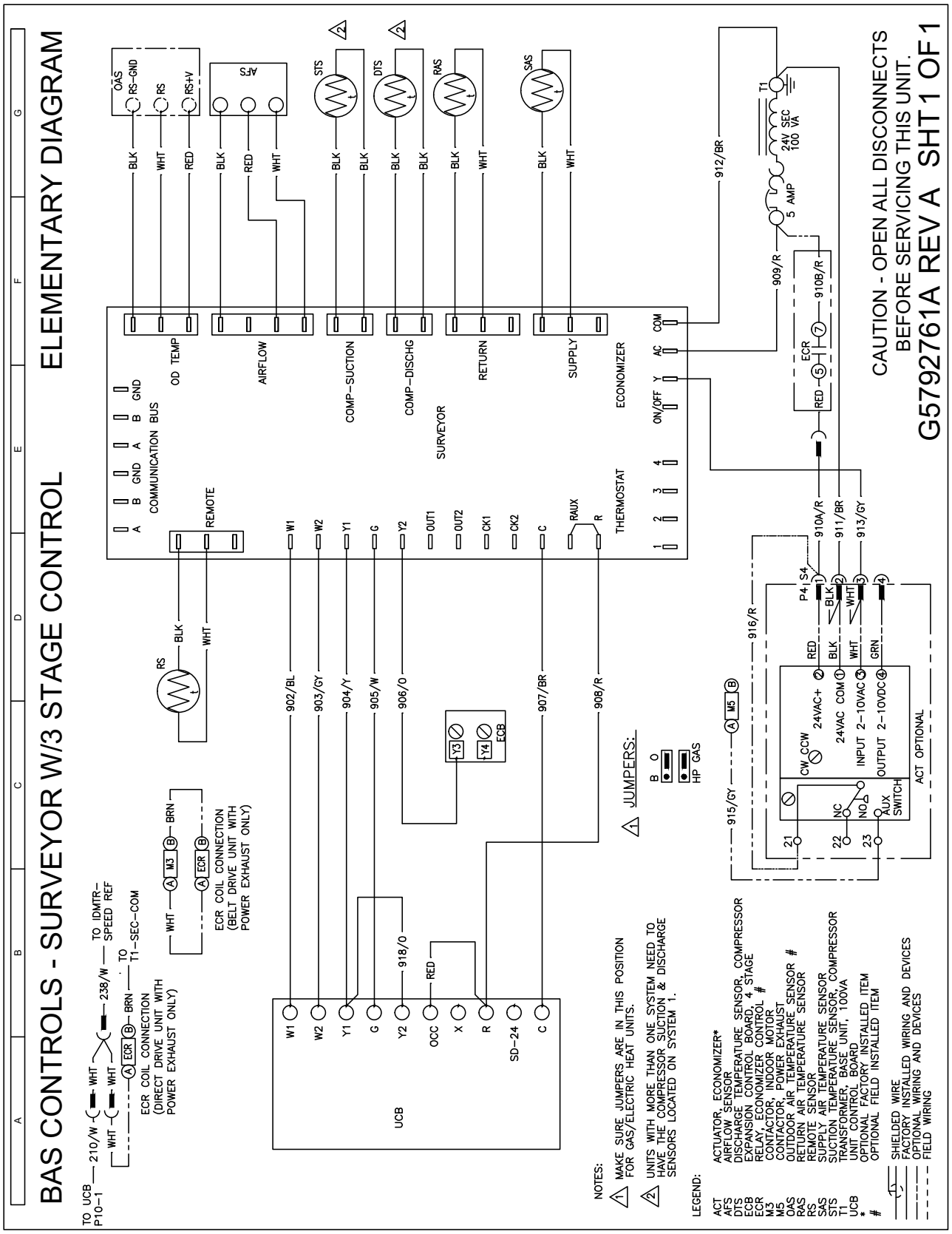

Typical ZL08-09 3 Stage Cooling Unit W/WO Heat with VFD 208/230-3-60

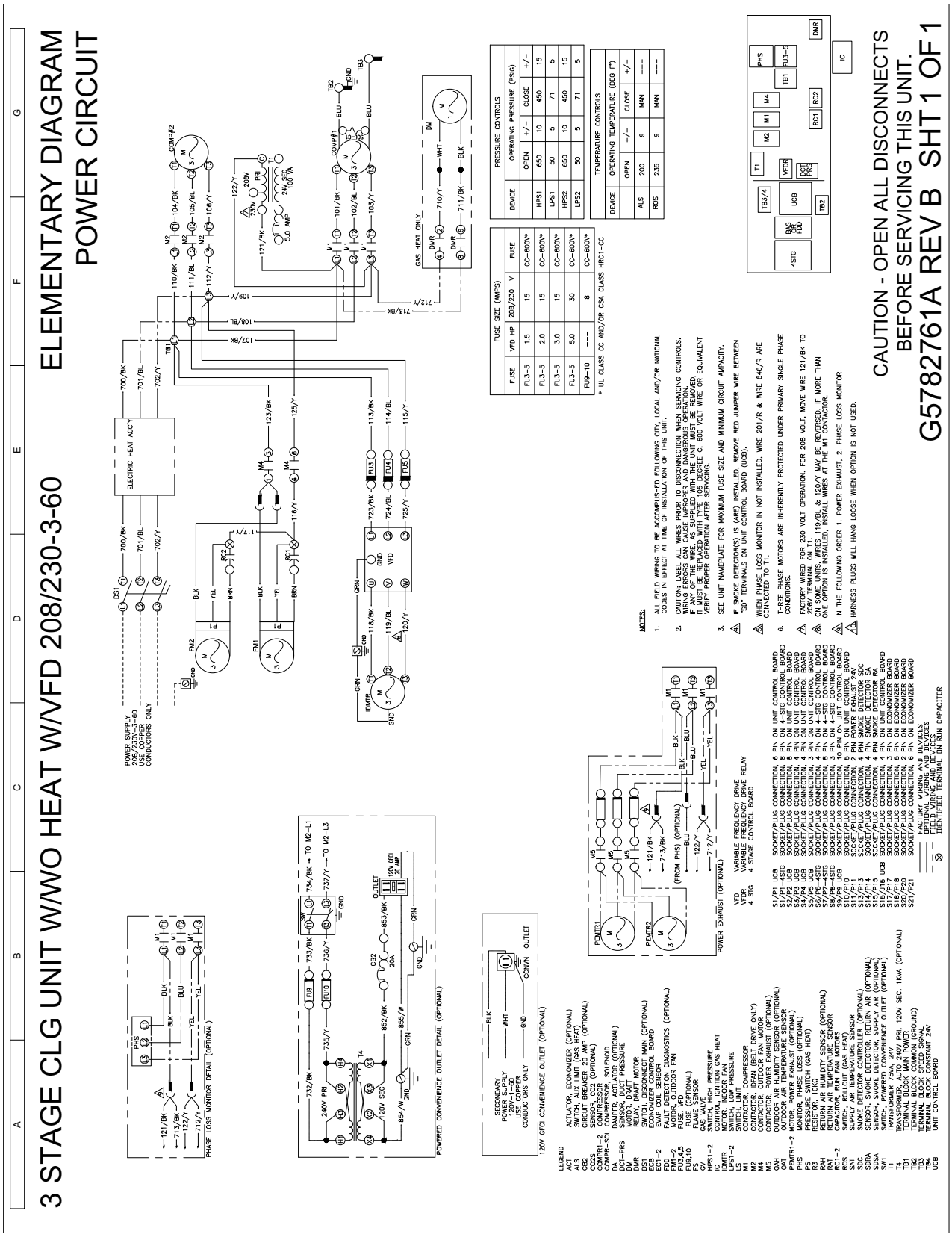

Typical ZL08-14 3 Stage Cooling With Electric Heat BD With VFD

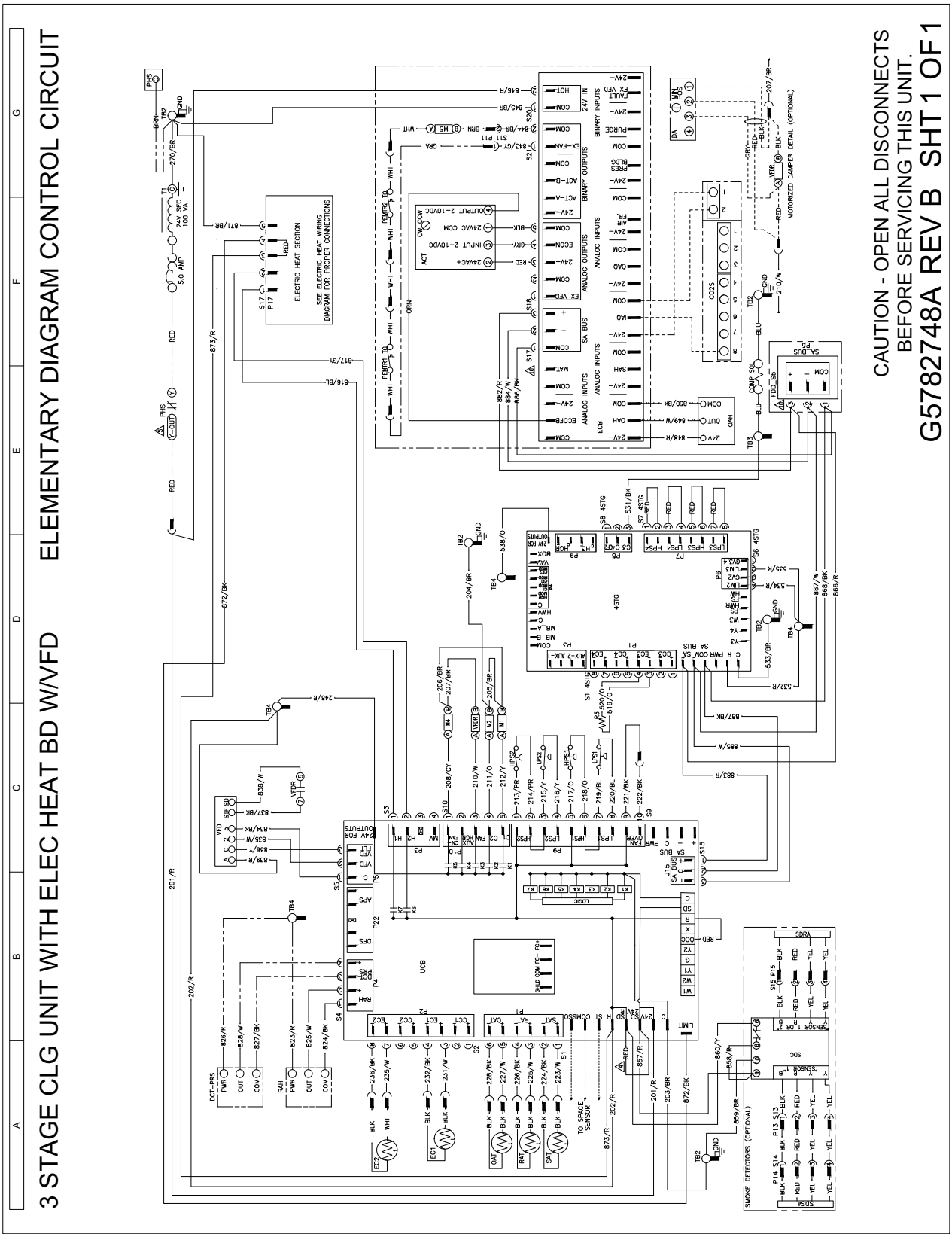

Typical ZL08-14 3 Stage Cooling Unit With Gas Heat BD With VFD

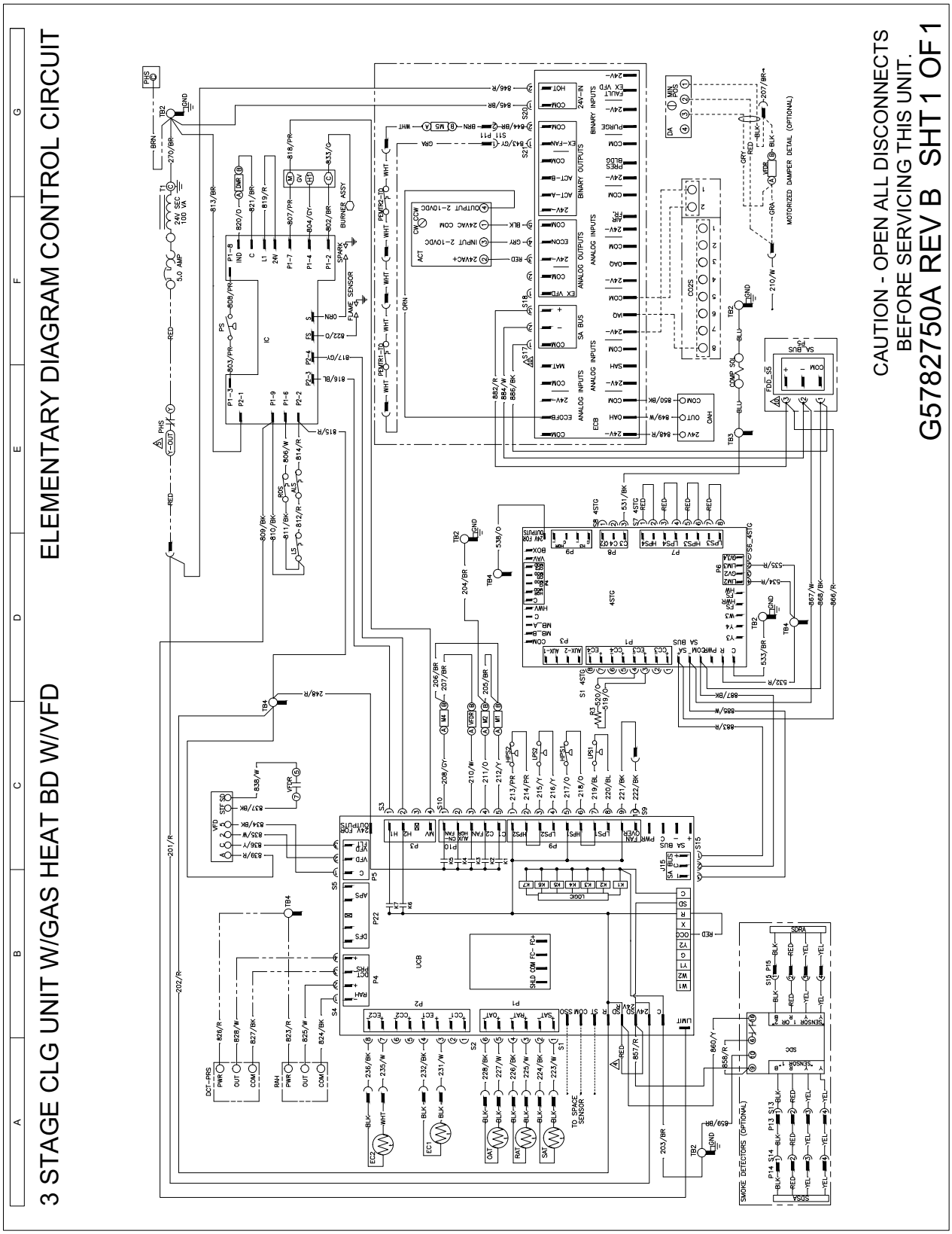

Typical ZL12-14 3 Stage Cooling w/wo Heat With VFD 208/230-3-60

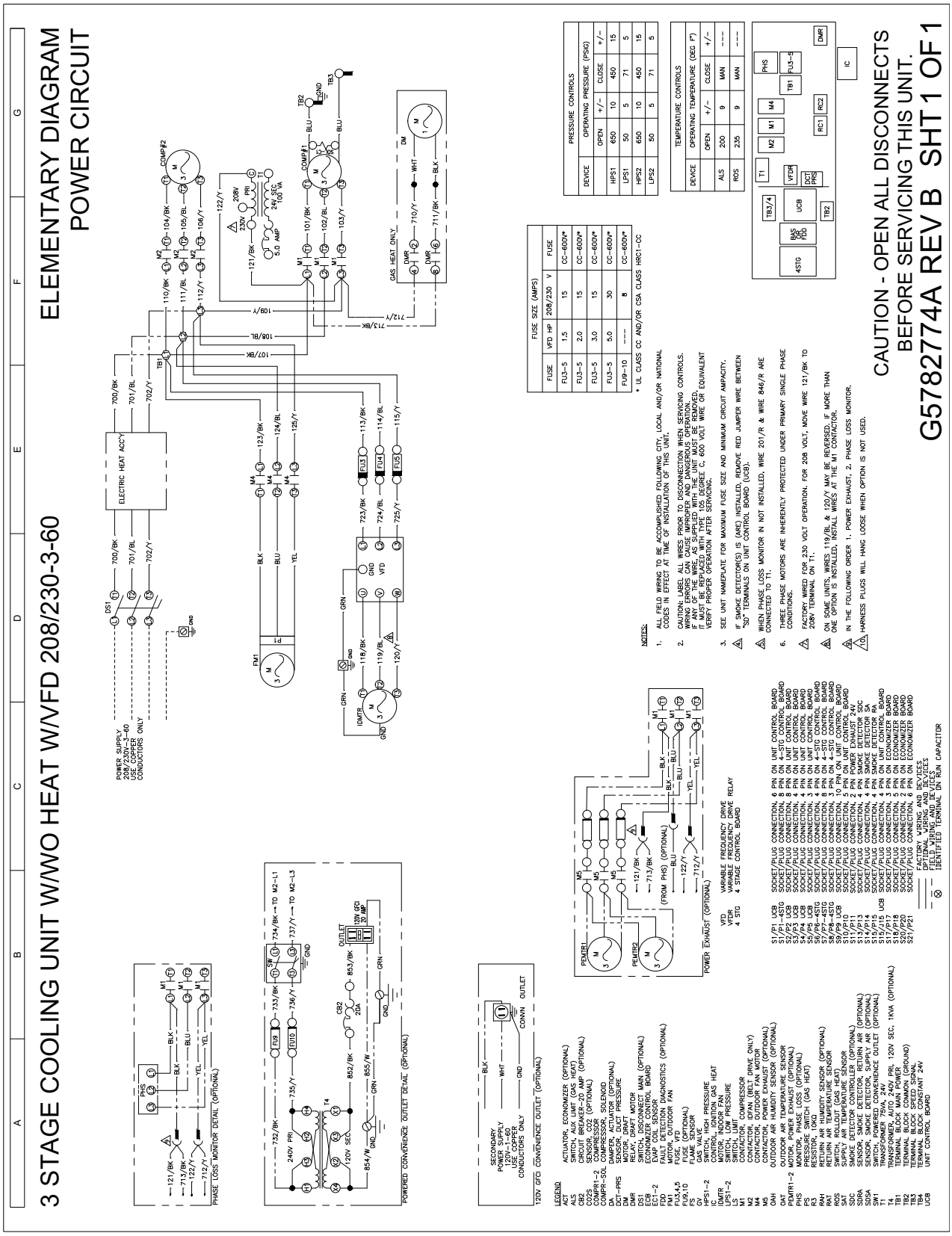

Typical ZL12-14 3 Stage Cooling w/wo Heat With VFD 460/575-3-60

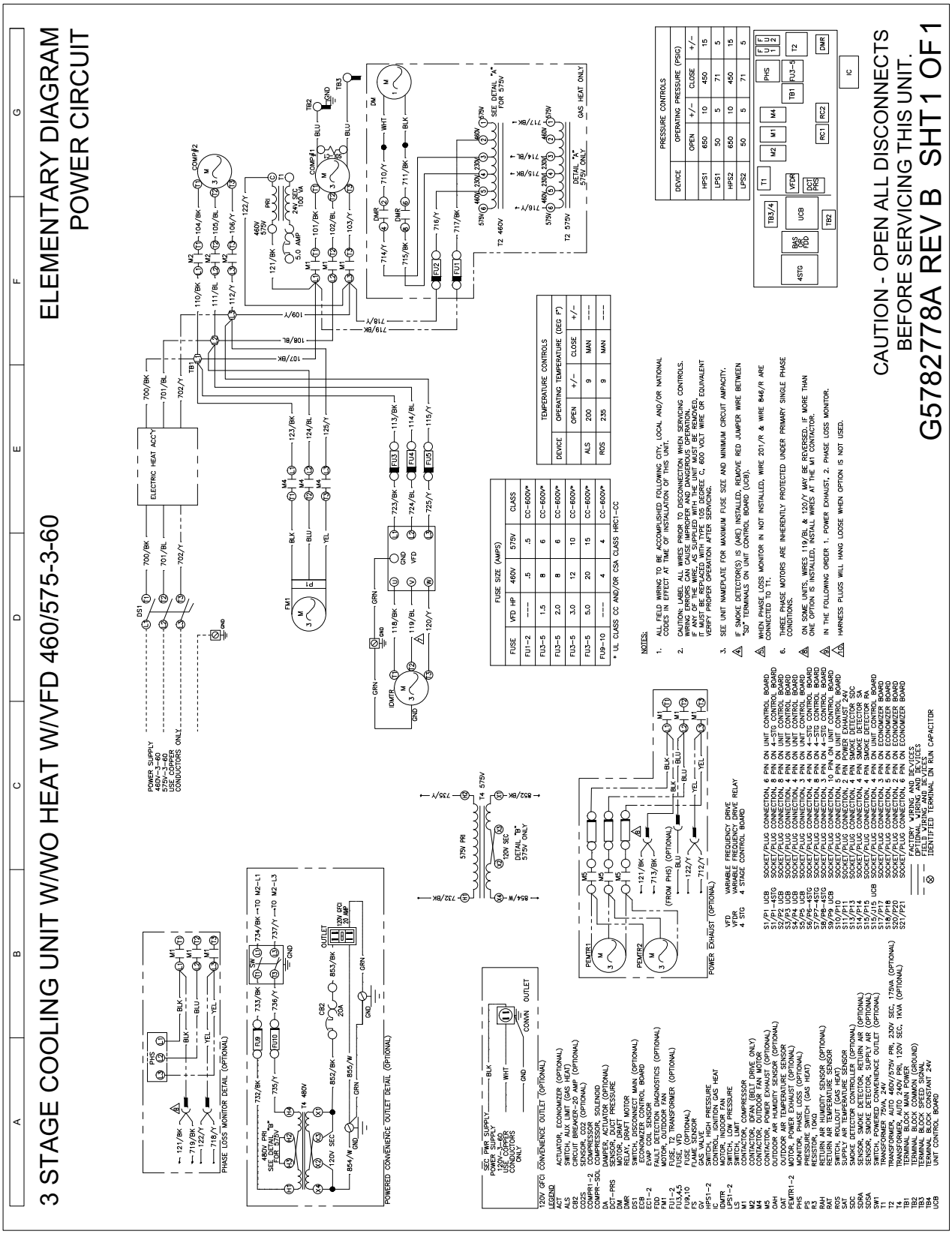

Typical ZL08-09 3 Stage Cooling Unit w/wo Heat With VFD 460/575-3-60

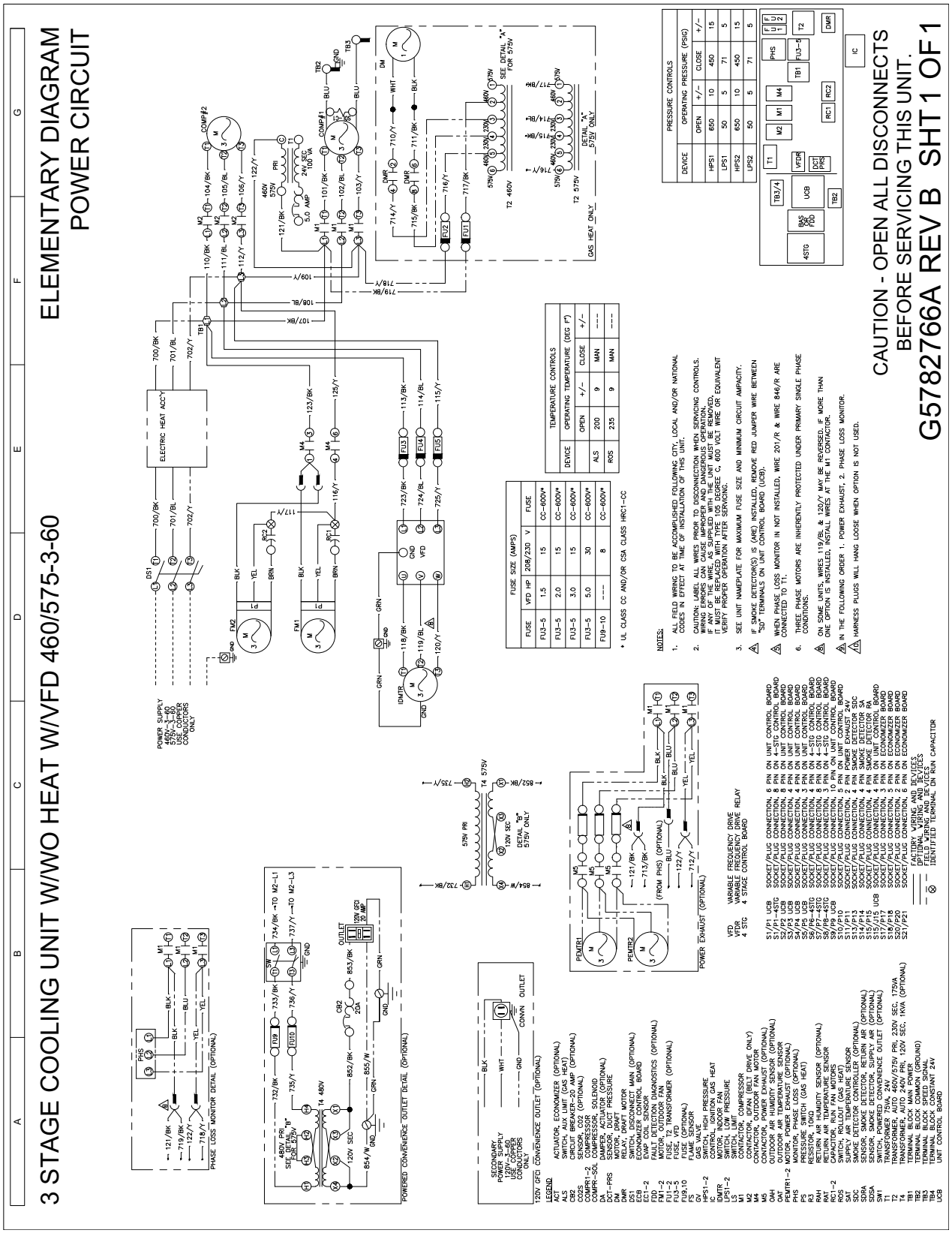

Typical ZL08-14 FDD With 3 Stage Control

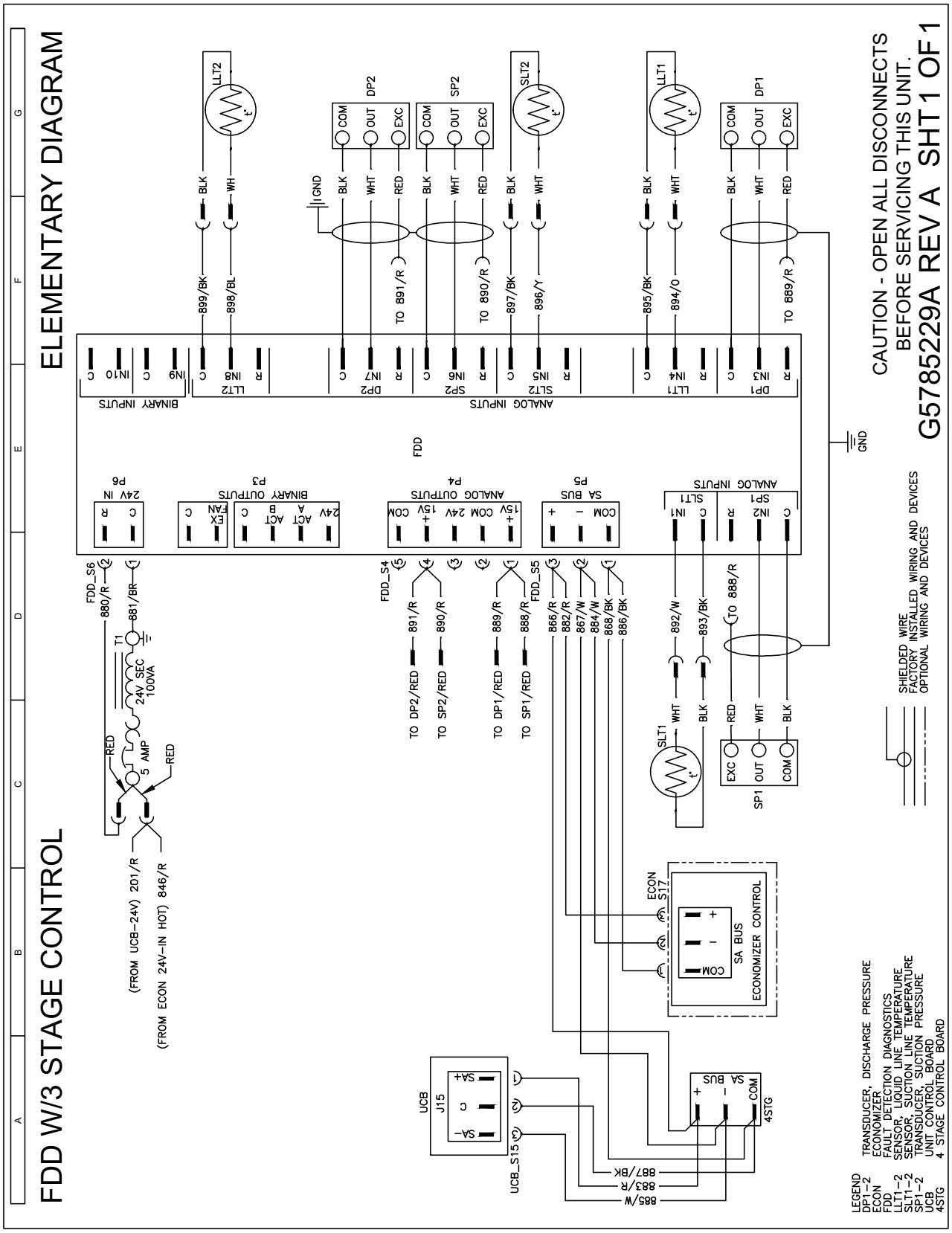

Typical ZY/ZQ04-06 Cooling Unit w Gas Heat 208/230-1-60 Direct Drive Elementary Diagram Control Circuit for FER

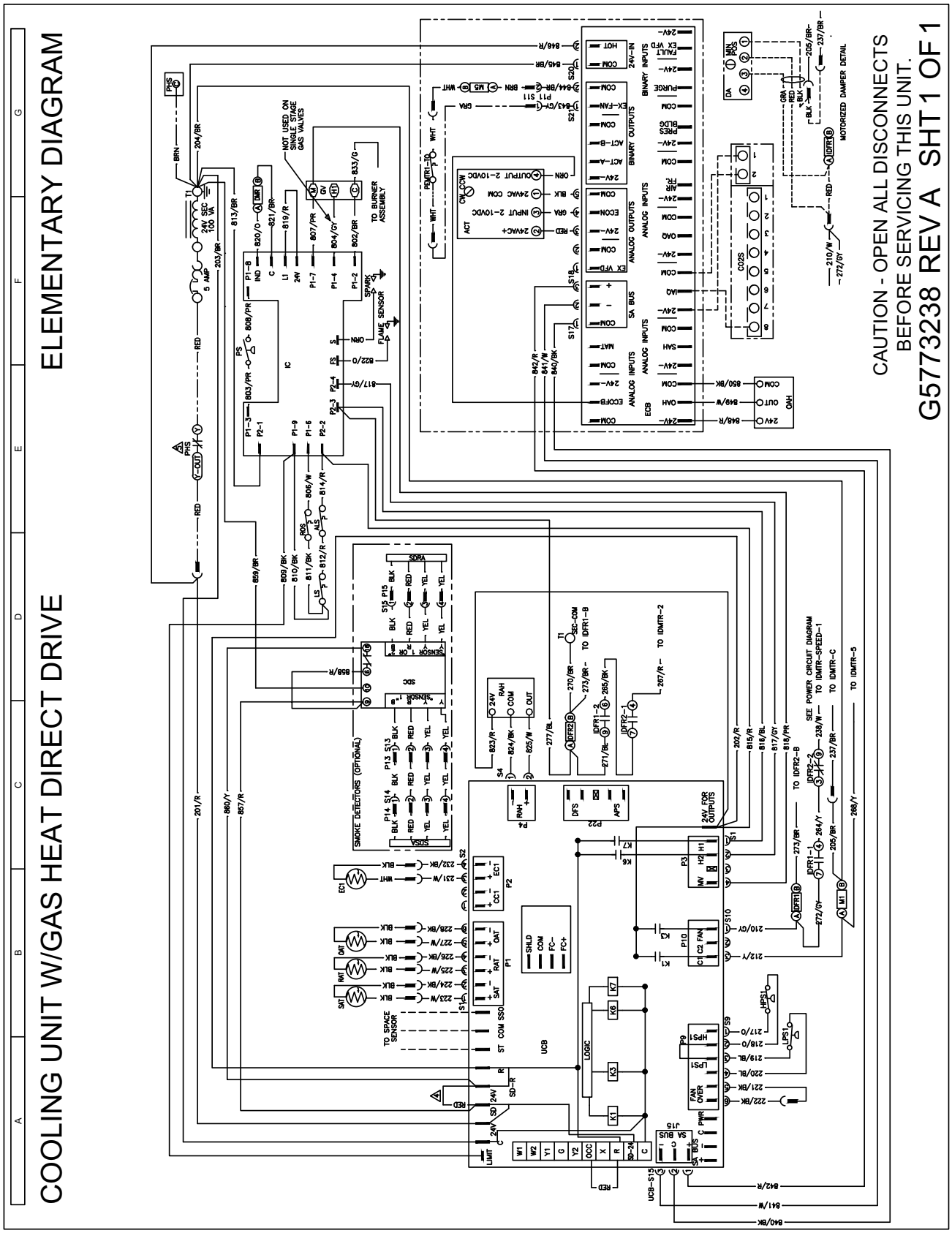

Typical FDD Elementary Wiring Diagram

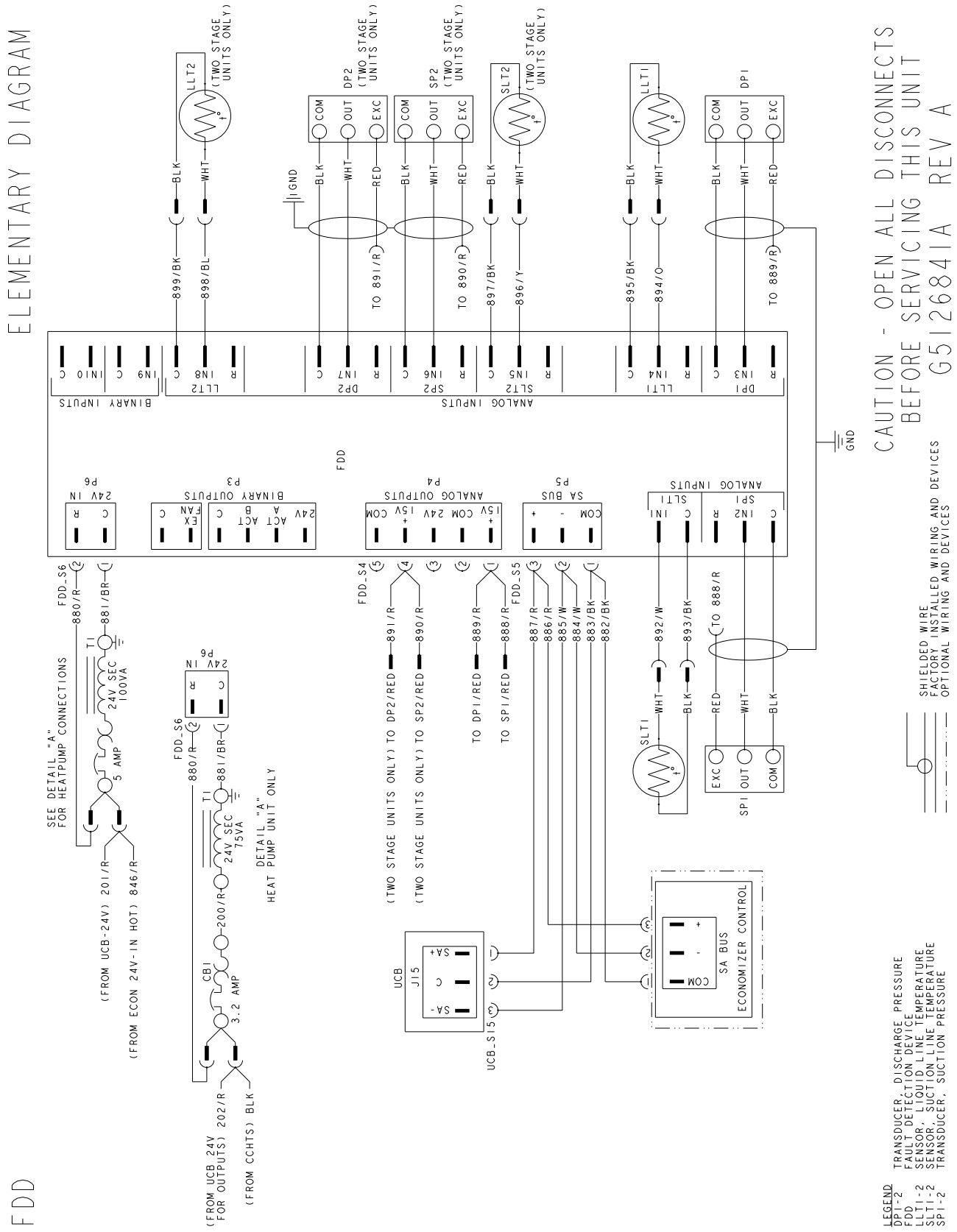

Weights and Dimensions

ZXA7, 08-14/ZY04-12/ZQ04-06/ZL08-14 Unit Weights

Unit 4 Point Load Weight

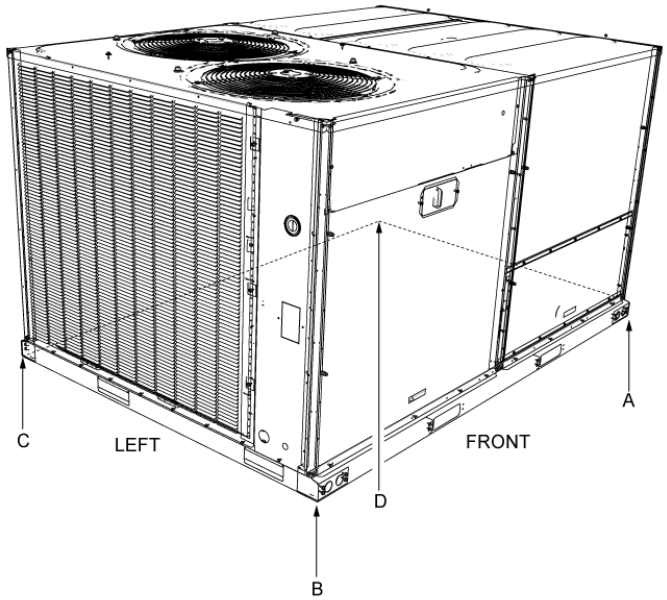

Unit 6 Point Load Weight

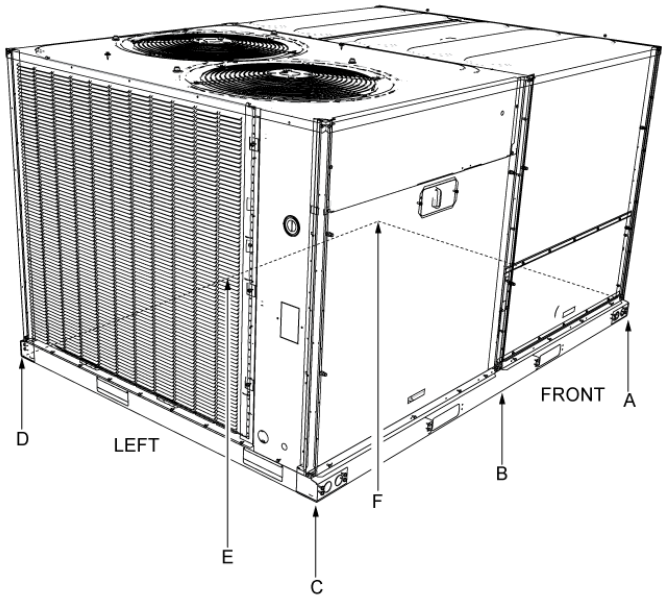

Unit Center Of Gravity

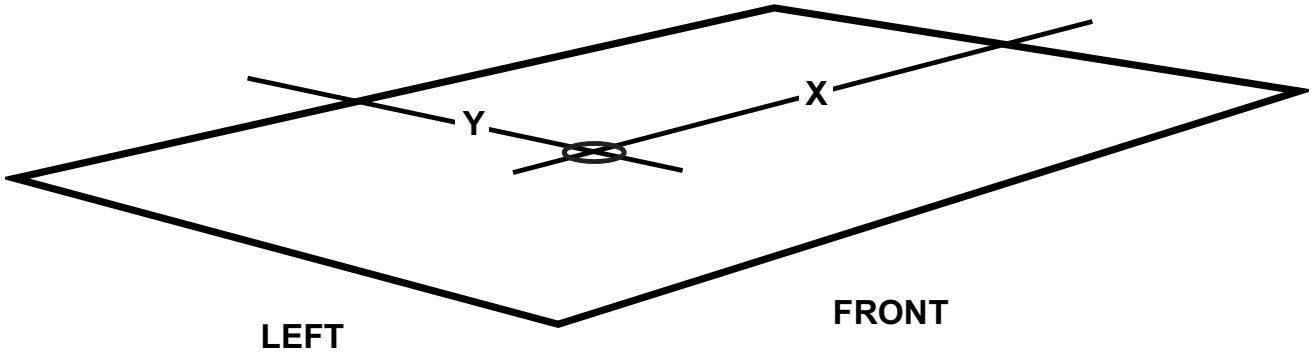

ZXA7-14/ZY04-12, A7/ZQ04-06/ZL08-14 Corner Weights

Model	Size (Tons)	Weight (lbs.)		Center of Gravity		4 point Load Location (lbs.)				6 point Load Location (lbs.)					
		Shipping	Operating	X	Y	A	B	C	D	A	B	C	D	E	F
ZQE	04 (3)	479	450	36	26	121	117	104	108	81	79	78	69	71	72
ZQE	05 (4)	516	487	36	26	131	124	113	119	88	85	82	75	77	80
ZQE	06 (5)	595	566	38	25	142	146	141	137	94	96	98	94	93	91
ZXE	A7 (6)	634	614	34	25	168	146	139	160	115	104	95	91	99	109
ZXE	08 (7.5)	796	791	47	36	214	248	177	152	139	153	169	121	109	99
ZXE	09 (8.5)	857	852	46	36	230	262	192	168	150	163	178	131	120	110
ZXE	12 (10)	884	879	46	36	242	271	193	172	158	171	184	131	122	113
ZXE	14 (12.5)	946	941	45	36	265	284	203	189	175	183	192	137	130	125
ZYE	04 (3)	486	481	36	25	127	118	113	122	86	82	78	75	78	82
ZYE	05 (4)	569	564	36	25	145	140	137	142	97	95	93	91	93	95
ZYE	06 (5)	587	582	36	25	151	145	140	146	101	99	96	93	95	98
ZYE	07 (6)	739	734	44	36	208	213	158	154	138	140	143	106	104	103
ZYE	A7 (6)	849	829	45	35	229	244	183	172	151	158	165	124	118	113
ZYE	08 (7.5)	883	878	46	36	239	271	196	173	156	169	184	133	122	113
ZYE	09 (8.5)	878	878	46	36	241	265	195	177	158	168	180	132	124	116
ZYE	12 (10)	907	902	47	36	239	278	207	178	155	171	190	142	128	116
ZYE	12 (10)	907	902	47	36	239	278	207	178	155	171	190	142	128	116
ZLE	08 (7.5)	925	920	45	37	262	282	195	181	173	181	191	131	125	119
ZLE	09 (8.5)	930	925	46	36	258	284	201	182	169	180	192	136	128	120
ZLE	12 (10)	960	955	46	35	258	287	216	194	169	181	195	146	136	127
ZLE	14 (12.5)	985	980	44	35	277	283	213	208	184	186	189	142	140	138

ZXA7-14/ZY04-12/ZQ04-06/ZL08-14 Corner Weights

Model	Size (Tons)	Weight (lbs.)		Center of Gravity		4 point Load Location (lbs.)				6 point Load Location (lbs.)					
		Shipping	Operating	X	Y	A	B	C	D	A	B	C	D	E	F
ZXG	A7 (6)	688	668	34	25	183	159	152	174	125	114	104	99	108	119
ZXG	08 (7.5)	898	893	46	37	251	285	190	168	164	178	194	129	119	109
ZXG	09 (8.5)	959	954	45	36	269	291	205	189	177	186	197	138	131	125
ZXG	12 (10)	990	985	45	37	284	301	206	194	187	195	203	139	133	128
ZXG	14 (12.5)	1052	1047	44	37	304	312	218	212	202	205	209	146	144	141
ZYG	04 (3)	532	527	36	27	147	136	117	126	99	94	90	77	81	85
ZYG	05 (4)	623	618	36	26	167	156	142	152	113	108	103	94	98	103
ZYG	06 (5)	641	636	35	26	174	159	144	159	118	111	104	95	101	108
ZYG	07 (6)	809	804	43	37	240	236	163	166	161	159	157	108	109	111
ZYG	A7 (6)	919	899	45.0	35	249	265	199	187	164	171	179	134	128	123

ZXA7-14/ZY04-12/ZQ04-06/ZL08-14 Corner Weights

Model	Size (Tons)	Weight (lbs.)		Center of Gravity		4 point Load Location (lbs.)				6 point Load Location (lbs.)					
		Shipping	Operating	X	Y	A	B	C	D	A	B	C	D	E	F
ZYG	08 (7.5)	985	980	44	37	290	297	199	195	192	195	198	133	131	129
ZYG	09 (8.5)	980	980	45	36	279	292	209	200	184	190	196	141	136	132
ZYG	12 (10)	1013	1008	45	36	285	300	217	206	189	195	202	146	141	136
ZQG	04 (3)	527	498	36	27	141	132	109	116	95	91	87	72	75	79
ZQG	05 (4)	567	538	35	26	147	135	123	134	99	94	89	81	85	90
ZQG	06 (5)	644	615	36	26	168	157	140	150	113	108	103	93	97	101
ZLG	08 (7.5)	1045	1040	44	37	304	312	215	210	202	205	209	144	141	139
ZLG	09 (8.5)	1035	1030	45	36	294	309	219	208	194	201	208	147	142	138
ZLG	12 (10)	1055	1050	45	36	299	313	224	214	198	204	210	151	146	142
ZLG	14 (12.5)	1075	1070	44	36	309	316	225	220	205	208	211	151	148	146

ZX/ZY/ZQ/ZL04-14 Unit Accessory Weights

Unit Accessory	Weights (lbs.)
Powered Convenience Outlet Factory installed	35
Non-Powered Convenience Outlet Factory Installed	10
Vertical Flow Dry Bulb Economizer Small Footprint	63
Vertical Flow Dry Bulb Economizer Large Footprint	96
Horizontal Flow Dry Bulb Economizer Small Footprint Short	75
Horizontal Flow Dry Bulb Economizer Small Footprint Tall	81
Horizontal Flow Dry Bulb Economizer Large Footprint Short	105
Horizontal Flow Dry Bulb Economizer Large Footprint Tall	102
Power Exhaust Vert Flow Small Footprint	39
Power Exhaust Vert Flow Large Footprint	39
Power Exhaust Horiz Flow Small Footprint	39
Power Exhaust Horiz Flow Large Footprint	39
Hail Guard Kit Small Short Factory Installed	19
Hail Guard Kit Small Tall Factory Installed	24
Hail Guard Kit Large Short Factory Installed	50
Hail Guard Kit Large Tall Factory Installed	50
Flue Extension Kit (1FE0414)	15
Flue Extension Kit (1FE0415)	17
Flue Extension Kit (1FE0416)	19
Curb Rigid 14" Small Footprint	145
Curb Rigid 14" Large Footprint	135
Curb Rigid 24" Small Footprint	135
Curb Rigid 24" Large Footprint	135

ZXA7, 08-14/ZY04-12/ZQ04-06/ZL08-14 Unit Dimensions

ZY04 and ZQ04-05

TONNAGE	UNIT	OPERATING WEIGHT (LBS) (BASE UNIT)	CENTER OF GRAVITY LOCATION (BASE UNIT) X	Y	4 POINT CORNER LOADS (LBS) (BASE UNIT) A	B	C	D
3	ZX	469 [212.7]	36.5 [927]	25.5 [648]	122.7 [55.7]	119.8 [54.3]	111.8 [50.7]	114.5 [52]
4	ZX	498 [225.9]	36.1 [917]	25 [635]	129.1 [58.6]	123.3 [56]	119.9 [54.4]	125.5 [57]
5	ZX	530 [240.4]	36.1 [917]	24.1 [612]	132.5 [60.1]	126.5 [57.4]	132.3 [60]	138.5 [62.9]
3	ZY	481 [218.2]	35.6 [904]	25.2 [640]	127.4 [57.8]	118.4 [53.7]	113.2 [51.4]	121.8 [55.3]
3	ZQ	450.2 [204.2]	36.3 [922]	26.1 [663]	121.2 [55]	117 [53.1]	104 [47.2]	107.7 [48.9]
4	ZQ	487.2 [221.0]	35.9 [912]	25.8 [655]	131.1 [59.5]	123.8 [56.2]	112.8 [51.2]	119.4 [54.2]

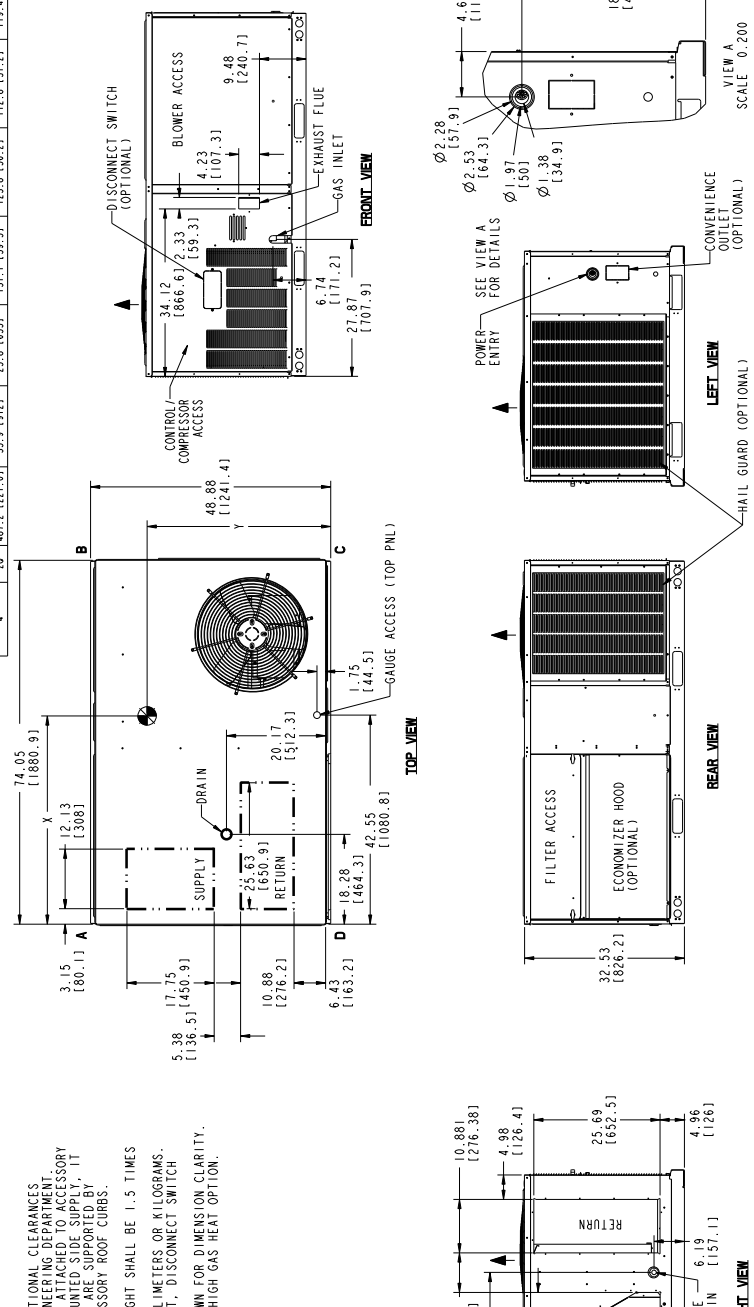

NOTES:
1. FOR OUTDOOR USE ONLY.
2. WEIGHTS SHOWN ARE FOR COOLING ONLY UNITS.
3. RECOMMENDED MIN. CLEARANCES:
   RIGHT SIDE: 18 [450] W/SIDE CONDENSATE DRAIN: 24 [600]
   LEFT SIDE: 12 [300] W/PIGTAIL: 18 [450]
   FRONT: 36 [900]
   REAR: 18 [450] W/ECONOMIZER/POWER EXHAUST: 36 [900]
   TOP: 72 [1800]
   BOTTOM: 1 [25]
4. REMOVED.
5. FOR SMALLER SERVICE AND OPERATIONAL CLEARANCES, CONTACT YOUR APPLICATION ENGINEERING DEPARTMENT.
6. DOWNFLOW DUCTS DESIGNED TO BE ATTACHED TO ACCESSORY ROOF CURB ONLY. IF UNIT IS MOUNTED SIDE SUPPLY, IT IS RECOMMENDED THAT THE DUCTS ARE SUPPORTED BY CROSS BRACES, AS DONE ON ACCESSORY ROOF CURBS.
7. REMOVED.
8. MINIMUM CONDENSATION TRAP HEIGHT SHALL BE 1.5 TIMES THE LOWEST NEGATIVE STATIC.
9. DIMENSIONS IN [ ] ARE IN MILLIMETERS OR KILOGRAMS.
10. OPTIONAL COIL GUARDS, GAS HEAT, DISCONNECT SWITCH SHOWN.
11. TOP PANEL EMBOSSMENTS NOT SHOWN FOR DIMENSION CLARITY.
12. HEAT EXCHANGER IS TYPICAL OF HIGH GAS HEAT OPTION.

REV LEV	DATE	REVISION RECORD	EC NO	DR	CK	ENG
A	09-13-13	NEW DRAWING	27375	RGG	JC	DW
B	12-03-14	REVISE CLEARANCES (NOTE 3), REMOVE EXTRA DIMS FROM VIEW A	31128	RGG	TFS	AJR
C	05-09-16	ADDED ADDITIONAL ROWS TO TABLE FOR ZQ UNITS 3 & 4 TON	44829	HG	RG	AJR
D	10-24-16	CORRECTED 4 POINT CORNER LOAD TABLE, CORRECTED CORNER CALL OUTS ON PRINT		ZAW	TR	TR

THIRD ANGLE PROJECTION

	NAME	DATE
DRN	R.GUJARDO	09-13-13
CHK	J.CARTER	09-13-13
ENG	D.MCDONALD	09-13-13
MFG		

SCALE: 1.00

ALL PROPRIETARY RIGHTS IN THE SUBJECT MATTER HEREOF ARE RESERVED AND NO PERMISSION IS GRANTED TO REPRODUCE, THIS PRINT, IN WHOLE OR IN PART OR DISCLOSE ANY OF THE INFORMATION CONTAINED THEREIN WITHOUT THE WRITTEN PERMISSION OF THE OWNER.

DRAWING PER ASME Y14.5-2009
TOLERANCES UNLESS OTHERWISE SPECIFIED:
ONE PLACE DECIMAL : ± .1
TWO PLACE DECIMAL : ± .03
THREE PLACE DECIMAL : ± .010
ANGLES : ± 2°
DIMENSIONS ARE IN INCHES
DO NOT SCALE PRINT

SAFETY AND KEY CHARACTERISTICS PER ENGINEERING SPEC

MATERIAL
TYPE NOT APPLICABLE
ENG SPEC NOT APPLICABLE

SUBMITTAL DWG, CDR
1 ODF, 32.5" CAB

JOHNSON CONTROLS
UNITARY PRODUCTS GROUP
NORMAN, OK 73069

SIZE
DWG NO UST-CDR-10DFSS
REV D
PART NO.
SHT NO 1 OF 1

NOTES:
1. FOR OUTDOOR USE ONLY.
2. WEIGHTS SHOWN ARE FOR COOLING ONLY UNITS.
3. RECOMMENDED MIN. CLEARANCES:
   RIGHT SIDE: 18 [450] W/SIDE CONDENSATE DRAIN: 24 [600]
   LEFT SIDE: 12 [300] W/PIGTAIL: 18 [450]
   FRONT: 36 [900]
   REAR: 18 [450] W/ECONOMIZER/POWER EXHAUST: 36 [900]
   TOP: 72 [1800]
   BOTTOM: 1 [25]
4. REMOVED.
5. FOR SMALLER SERVICE AND OPERATIONAL CLEARANCES CONTACT YOUR APPLICATION ENGINEERING DEPARTMENT.
6. DOWNFLOW DUCTS DESIGNED TO BE ATTACHED TO ACCESSORY ROOF CURB ONLY. IF UNIT IS MOUNTED SIDE SUPPLY, IT IS RECOMMENDED THAT THE DUCTS ARE SUPPORTED BY CROSS BRACES, AS DONE ON ACCESSORY ROOF CURBS.
7. REMOVED.
8. MINIMUM CONDENSATION TRAP HEIGHT SHALL BE 1.5 TIMES THE LOWEST NEGATIVE STATIC.
9. DIMENSIONS IN [ ] ARE IN MILLIMETERS OR KILOGRAMS.
10. OPTIONAL COIL GUARDS, GAS HEAT, DISCONNECT SWITCH SHOWN.
11. TOP PANEL EMBOSSMENTS NOT SHOWN FOR DIMENSION CLARITY.
12. HEAT EXCHANGER IS TYPICAL OF HIGH GAS HEAT OPTION.

TONNAGE	UNIT	OPERATING WEIGHT (LBS) (BASE UNIT)	CENTER OF GRAVITY LOCATION (BASE UNIT)		4 POINT CORNER LOADS (LBS) (BASE UNIT)			
			X	Y	A	B	C	D
4	ZY	564 [255.8]	36.3 [922]	24.9 [632]	144.9 [65.7]	139.9 [63.5]	137.1 [62.2]	142 [64.4]
5	ZY	582 [264]	36.2 [919]	25.1 [638]	151.1 [68.6]	145.1 [65.8]	139.9 [63.5]	145.7 [66.1]
5	ZQ	566.2 [256.8]	37.5 [953]	25.1 [638]	141.9 [64.4]	146.2 [66.4]	141 [64]	136.8 [62.1]
6	ZXA	614 [278.8]	34.4 [874]	25.3 [643]	168.0 [76.3]	146.0 [66.3]	139.0 [63.1]	160.0 [72.6]

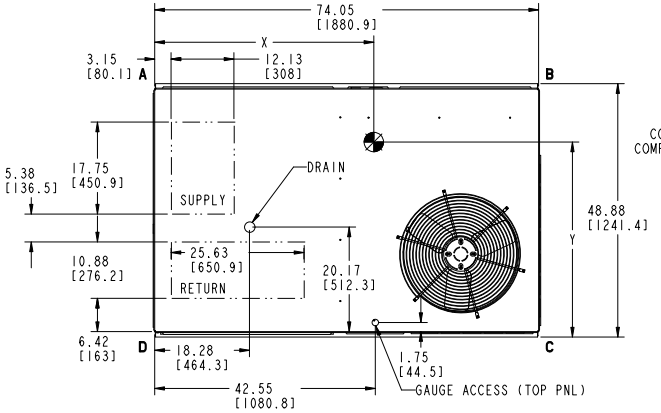

TOP VIEW

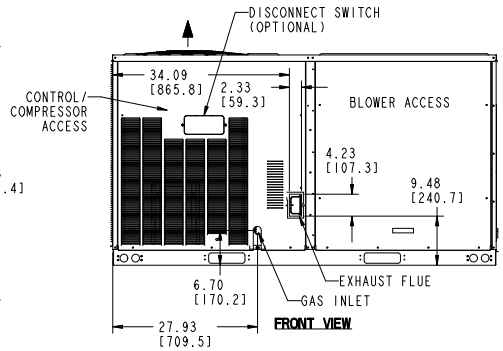

FRONT VIEW

DIRECTION OF AIRFLOW

CENTER OF GRAVITY

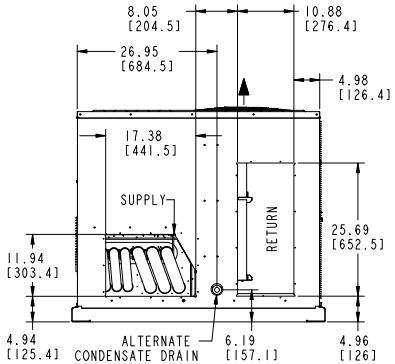

RIGHT VIEW

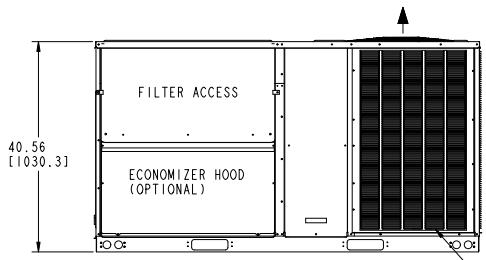

REAR VIEW

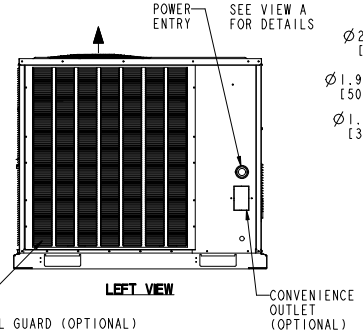

LEFT VIEW

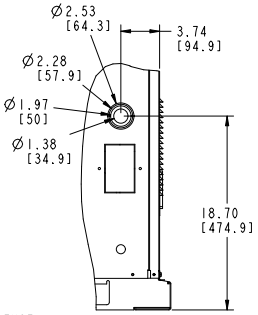

VIEW A
SCALE 0.200

REV LEV	DATE	REVISION RECORD	EC NO	DR	CK	ENG
A	09-13-13	NEW DRAWING	27375	RGG	JC	DW
B	12-03-14	REVISE CLEARANCES (NOTE 3), REMOVE EXTRA DIMS FROM VIEW A	37128	RGG	TPS	AJR
C	05-10-16	ADDED ADDITIONAL ROW TO TABLE FOR ZQ UNIT 5 TON	44829	HG	RG	AJR
D	10-25-16	CORRECTED 4 POINT CORNER LOAD TABLE, CORRECTED CORNER CALL OUTS ON PRINT	---	ZAW	TR	TR
E	08-22-16	ADDED DATA FOR ZXA 6 TON UNIT & REMOVED OBS DATA	61037	SMD	LOP	RCF

THIRD ANGLE PROJECTION

	NAME	DATE
DRN	R.GUAJARDO	09-13-13
CHK	J.CARTER	09-13-13
ENG	D.WOODWARD	09-13-13
MFG		

SCALE 0.100

ALL PROPRIETARY RIGHTS IN THE SUBJECT MATTER HEREOF ARE RESERVED AND NO PERMISSION IS GRANTED TO REPRODUCE THIS PRINT IN WHOLE OR IN PART OR DISCLOSE ANY OF THE INFORMATION UPON IT TO OTHERS WITHOUT WRITTEN RELEASE BY JOHNSON CONTROLS

DRAWING PER ASME Y14.5-2009

TOLERANCES UNLESS OTHERWISE SPECIFIED:
ONE PLACE DECIMAL = ± .1
TWO PLACE DECIMAL = ± .03
THREE PLACE DECIMAL = ± .010
ANGLES = ± 2°
DIMENSIONS ARE IN INCHES
DO NOT SCALE PRINT

SUBMITTAL DWG, CDR,
1 ODF, 40.5" CAB

JOHNSON CONTROLS
UNITARY PRODUCTS GROUP
NORMAN, OK 73069

SAFETY AND KEY CHARACTERISTICS PER BE-PDP-STD-01

MATERIAL
TYPE NOT APPLICABLE
ENG SPEC NOT APPLICABLE
SIZE
DWG NO. UST-CDR-1ODFST
REV E
PART NO.
SHT NO 1 OF 1

ZX08, ZY07, and ZYA7

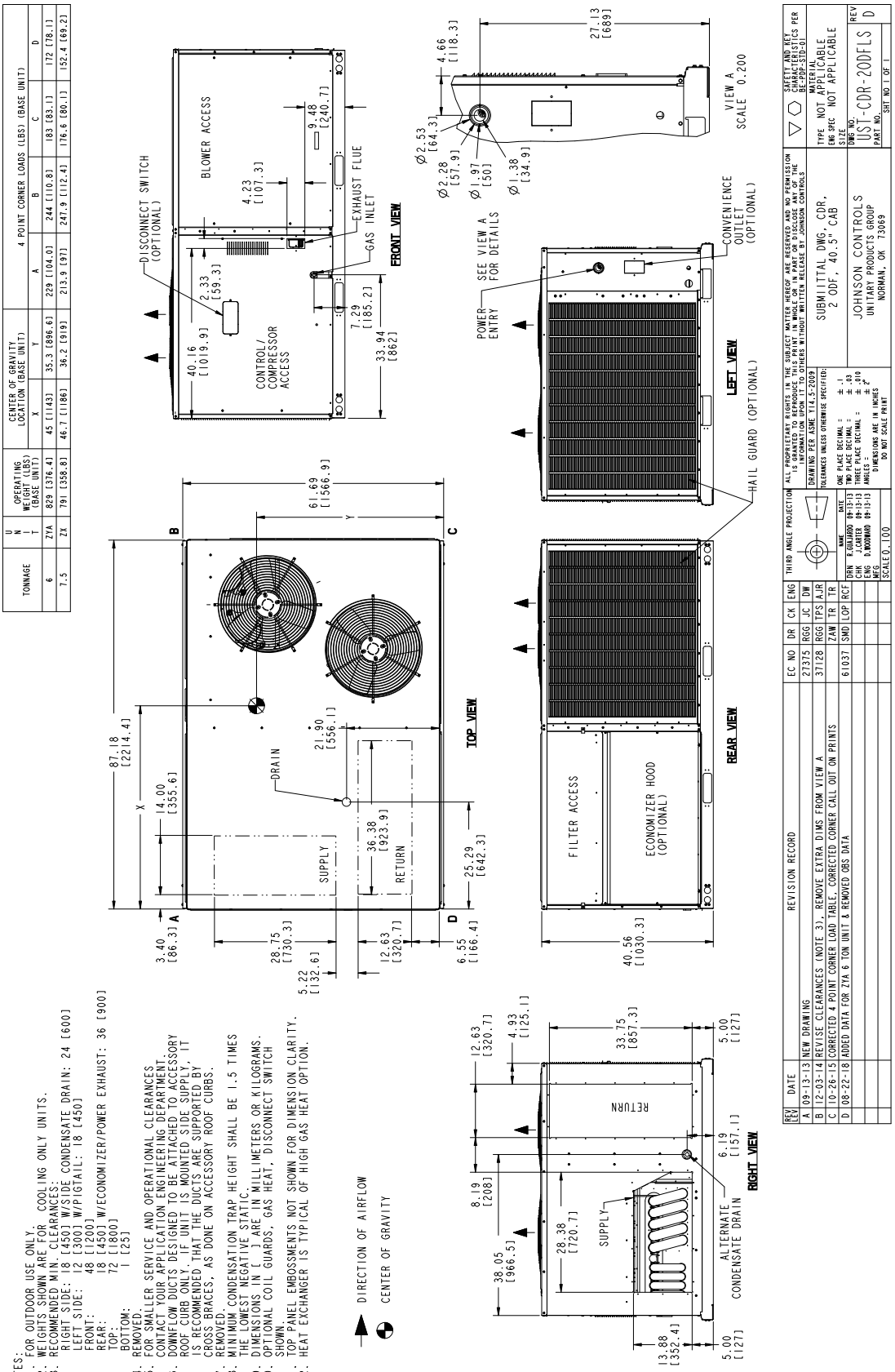

ZX09/12, ZY08/09 and ZL08/09

TONNAGE	UNIT	OPERATING WEIGHT (LBS) (BASE UNIT)	CENTER OF GRAVITY LOCATION (BASE UNIT) X	CENTER OF GRAVITY LOCATION (BASE UNIT) Y	4 POINT CORNER LOADS (LBS) (BASE UNIT) A	B	C	D
7.5	ZL	920 [417.3]	45.1 [1145.5]	36.7 [932.2]	262.3 [119]	282.3 [128.1]	194.6 [91.2]	180.8 [82]
8.5	ZL	925 [419.6]	45.6 [1158.2]	36.3 [922]	257.7 [117]	283.9 [128.8]	201.0 [99.3]	182.5 [82.8]
8.5	ZX	852 [386.5]	46.3 [1176]	35.8 [909]	230.1 [104.4]	281.8 [118.8]	191.6 [86.9]	168.4 [76.4]
10	ZX	819 [398.7]	46 [1168]	36.2 [919]	241.8 [109.7]	271.3 [123.1]	193.3 [87.7]	172.3 [78.2]
7.5	ZY	878 [398.3]	46.2 [1173]	36 [914]	239 [108.4]	270.7 [122.8]	195.5 [88.7]	172.6 [78.3]
8.5	ZY	878 [398.3]	45.6 [1158]	35.7 [907]	240.5 [109.1]	264.9 [120.2]	195.2 [88.5]	177.2 [80.4]

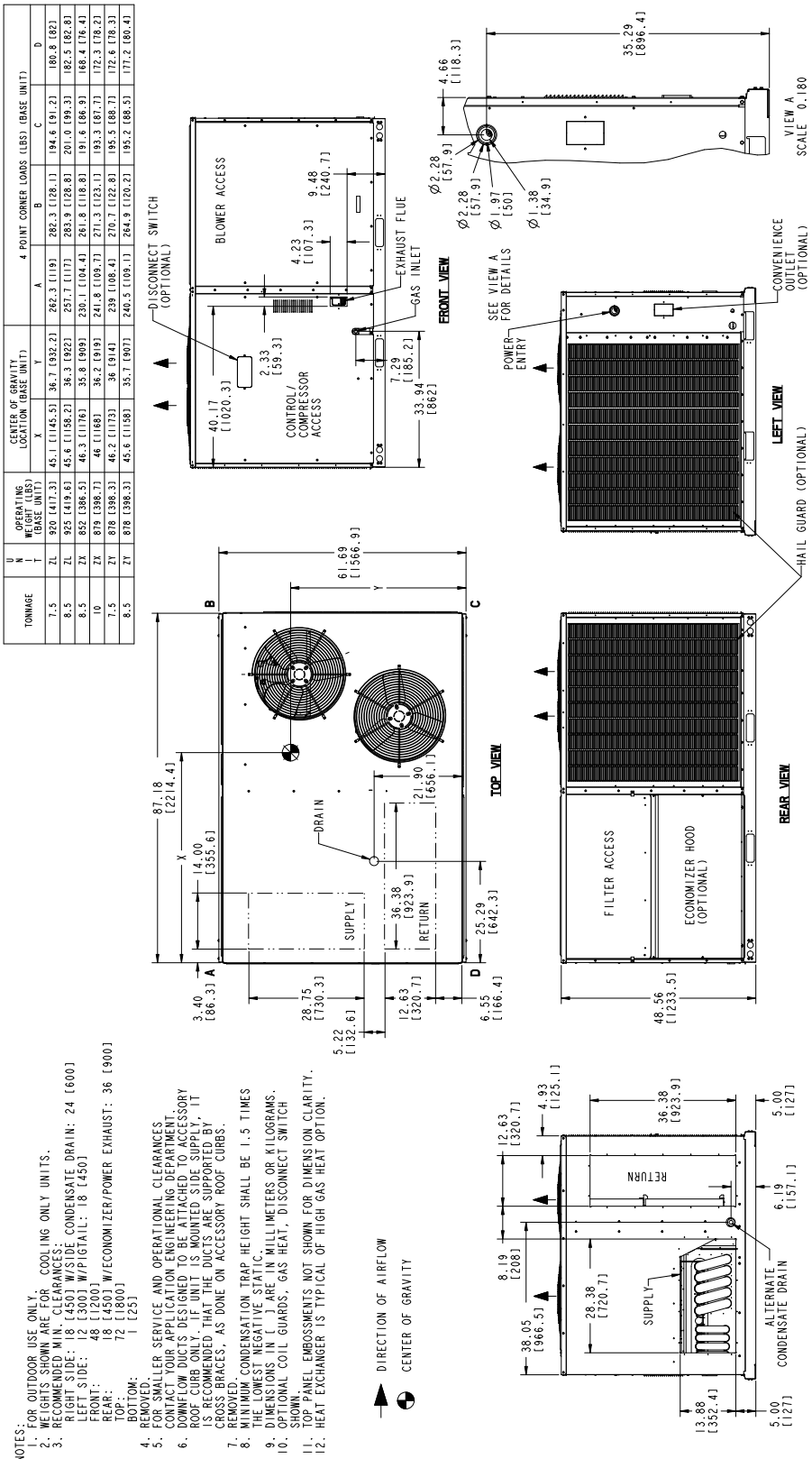

NOTES:
1. FOR OUTDOOR USE ONLY.
2. WEIGHTS SHOWN ARE FOR COOLING ONLY UNITS.
3. RECOMMENDED MIN. CLEARANCES:
   RECOMMENDED MIN. CLEARANCES: 24 [600]
   RIGHT SIDE: 18 [450] W/SIDE CONDENSATE DRAIN: 24 [600]
   LEFT SIDE: 12 [300] W/PIGTAIL: 18 [450]
   FRONT: 48 [1200]
   REAR: 18 [450] W/ECONOMIZER/POWER EXHAUST: 36 [900]
   TOP: 72 [1800]
   BOTTOM: 1 [25]
4. REMOVED.
5. FOR SMALLER SERVICE AND OPERATIONAL CLEARANCES, CONTACT YOUR APPLICATION ENGINEERING DEPARTMENT.
6. DOWNFLOW DUCTS DESIGNED TO BE ATTACHED TO ACCESSORY ROOF CURB ONLY. IF UNIT IS MOUNTED ON SIDE SUPPLY, IT IS RECOMMENDED THAT THE DUCTS ARE SUPPORTED BY CROSS-BRACES, AS DONE ON ACCESSORY ROOF CURBS.
7. REMOVED.
8. MINIMUM CONDENSATION TRAP HEIGHT SHALL BE 1.5 TIMES THE LOWEST NEGATIVE STATIC.
9. DIMENSIONS IN [ ] ARE IN MILLIMETERS OR KILOGRAMS.
10. OPTIONAL COIL GUARDS, GAS HEAT, DISCONNECT SWITCH SHOWN.
11. TOP PANEL EMBOSSMENTS NOT SHOWN FOR DIMENSION CLARITY.
12. HEAT EXCHANGER IS TYPICAL OF HIGH GAS HEAT OPTION.

ZX14, ZY12 and ZL12/14

TONNAGE	UNIT	OPERATING WEIGHT (LBS) (BASE UNIT)	CENTER OF GRAVITY LOCATION (BASE UNIT) X	Y	4 POINT CORNER LOADS (LBS) (BASE UNIT) A	B	C	D
10	ZL	955 [433.2]	45.8 [1163.3]	35.4 [899.2]	258.2 [117.1]	287.1 [130.2]	215.7 [97.8]	194.0 [88.0]
12.5	ZL	980 [444.5]	44 [1117.6]	35.4 [899.2]	276.6 [125.5]	283.0 [128.4]	212.6 [96.4]	207.8 [94.3]
12.5	ZX	941 [426.8]	45 [1143]	36.2 [919]	265.2 [120.3]	284.1 [128.9]	202.5 [91.9]	189 [85.7]
10	ZY	902 [409.1]	46.8 [1189]	35.5 [902]	238.6 [108.2]	217.8 [126]	207.3 [94.1]	178.1 [80.8]

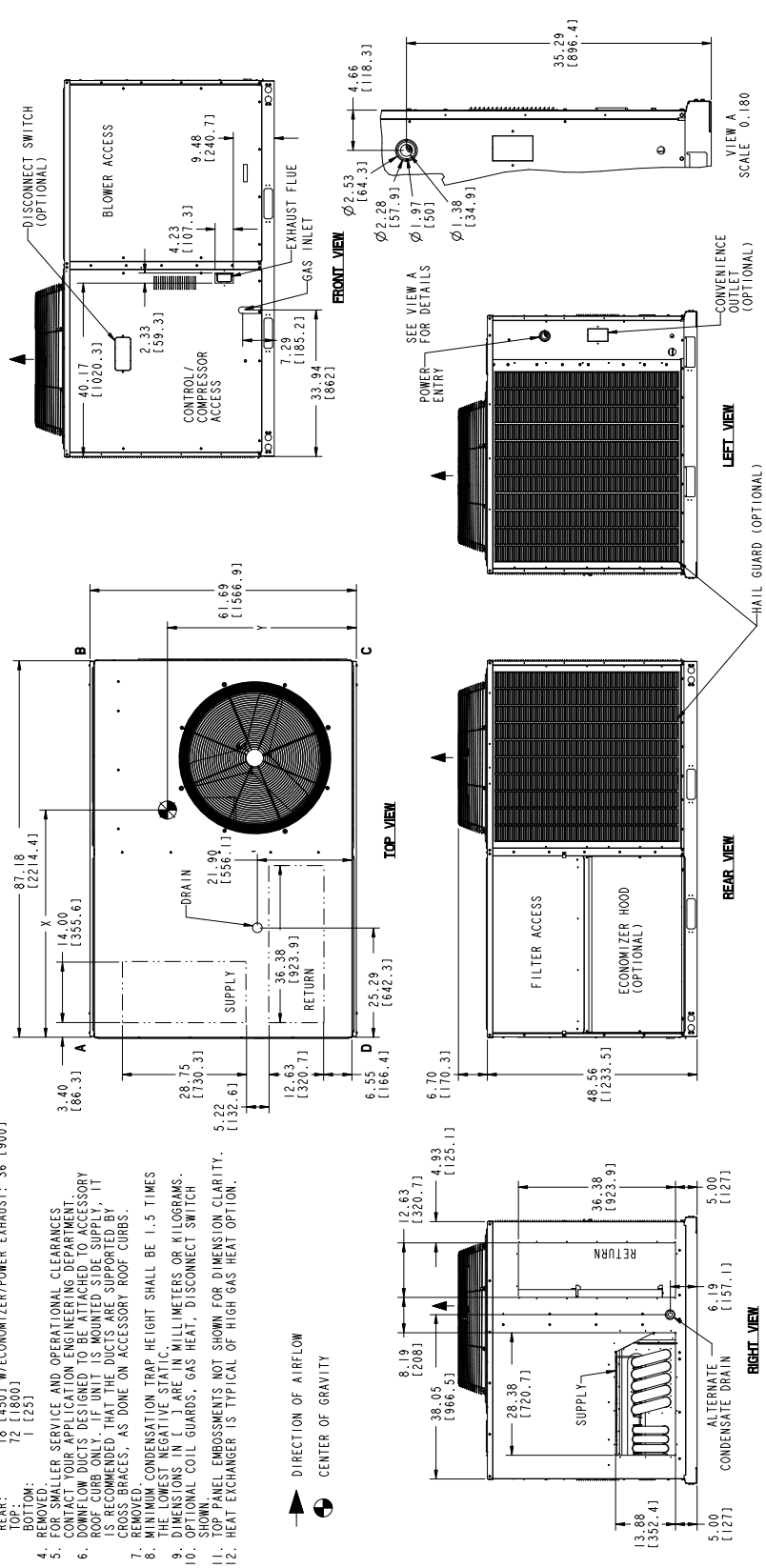

NOTES:
1. FOR OUTDOOR USE ONLY.
2. WEIGHTS SHOWN ARE FOR COOLING ONLY UNITS.
3. RECOMMENDED MIN. CLEARANCES: CONDENSATE DRAIN: 24 [600]
   RIGHT SIDE: 18 [450] W/SIDE CONDENSATE DRAIN: 18 [450]
   LEFT SIDE: 12 [300] W/PIGTAIL: 18 [450]
   FRONT: 48 [1200]
   REAR: 18 [450] W/ECONOMIZER/POWER EXHAUST: 36 [900]
   TOP: 72 [1800]
   BOTTOM: 1 [25]
4. REMOVED.
5. FOR SMALLER SERVICE AND OPERATIONAL CLEARANCES CONTACT YOUR APPLICATION ENGINEERING DEPARTMENT.
6. DOWNFLOW DUCTS DESIGNED TO BE ATTACHED TO ACCESSORY ROOF CURB ONLY. IF UNIT IS MOUNTED SIDE SUPPLY, IT IS RECOMMENDED THAT THE DUCTS ARE SUPPORTED BY CROSS BRACES, AS DONE ON ACCESSORY ROOF CURBS.
7. REMOVED.
8. MINIMUM CONDENSATION TRAP HEIGHT SHALL BE 1.5 TIMES THE LOWEST NEGATIVE STATIC.
9. DIMENSIONS IN [ ] ARE IN MILLIMETERS OR KILOGRAMS.
10. OPTIONAL COIL GUARDS, GAS HEAT, DISCONNECT SWITCH SHOWN.
11. TOP PANEL EMBOSSMENTS NOT SHOWN FOR DIMENSION CLARITY.
12. HEAT EXCHANGER IS TYPICAL OF HIGH GAS HEAT OPTION.

ZY04-06, ZXA7, and ZQ04-06 Unit Clearances

Direction	Distance (in.)	Direction	Distance (in.)
Top[1]	72	Right	18
Front	36	Left	12
Rear	18[2]/36[3]	Bottom[4]	1

1. Units must be installed outdoors. Over hanging structure or shrubs should not obscure condenser air discharge outlet.
2. Units without economizer or power exhaust.
3. Units equipped with an Economizer or Power Exhaust. Flue products must not be discharged within 10 Feet of the rear of the unit.
4. Units may be installed on combustible floors made from wood or class A, B or C roof covering materials.

ZX08-14, ZY07-12, ZL08-14 Unit Clearances

Direction	Distance (in.)	Direction	Distance (in.)
Top[1]	72	Right	18
Front	48	Left	12
Rear	18[2]/36[3]	Bottom[4]	1

1. Units must be installed outdoors. Over hanging structure or shrubs should not obscure condenser air discharge outlet.
2. Units without economizer or power exhaust.
3. Units equipped with an Economizer or Power Exhaust. Flue products must not be discharged within 10 Feet of the rear of the unit.
4. Units may be installed on combustible floors made from wood or class A, B or C roof covering materials.

ZXA7-14/ZY04-12/ZQ04-06/ZL08-14 Unit Roof Curb Dimensions

1RC0456, 1RC0458 Roof Curb Dimensions

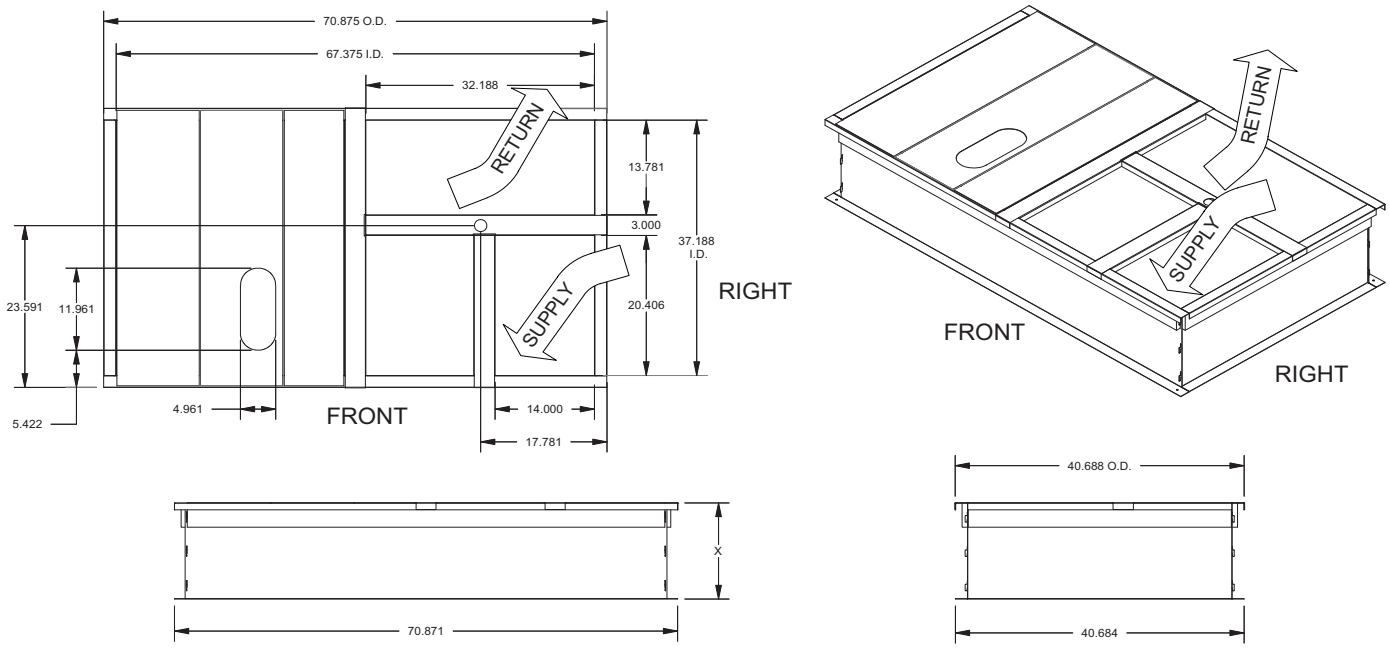

1RC0456 X= 14" Height
1RC0458 X= 24" Height

Notes:
1. Sides, ends and cross support are 18-G90. Deck pans, R/A & S/A supports are 20-G90.
2. Full perimeter wood nailer.
3. Insulated deck pans.

Unit Models used with 1RC0456, 1RC0458 Roof Curb

ZY04	ZQ04	ZXA7
ZY05	ZQ05	
ZY06	ZQ06	

NOTE: If utilities are required thru the base of the unit or thru the roof curb the following field installed accessories can be purchased thru your dealer or contractor:

1TB0401 - Thru the base electrical and thru the curb gas

1TB0403 - Thru the base electrical and gas

1RC0457, 1RC0459 Roof Curb Dimensions

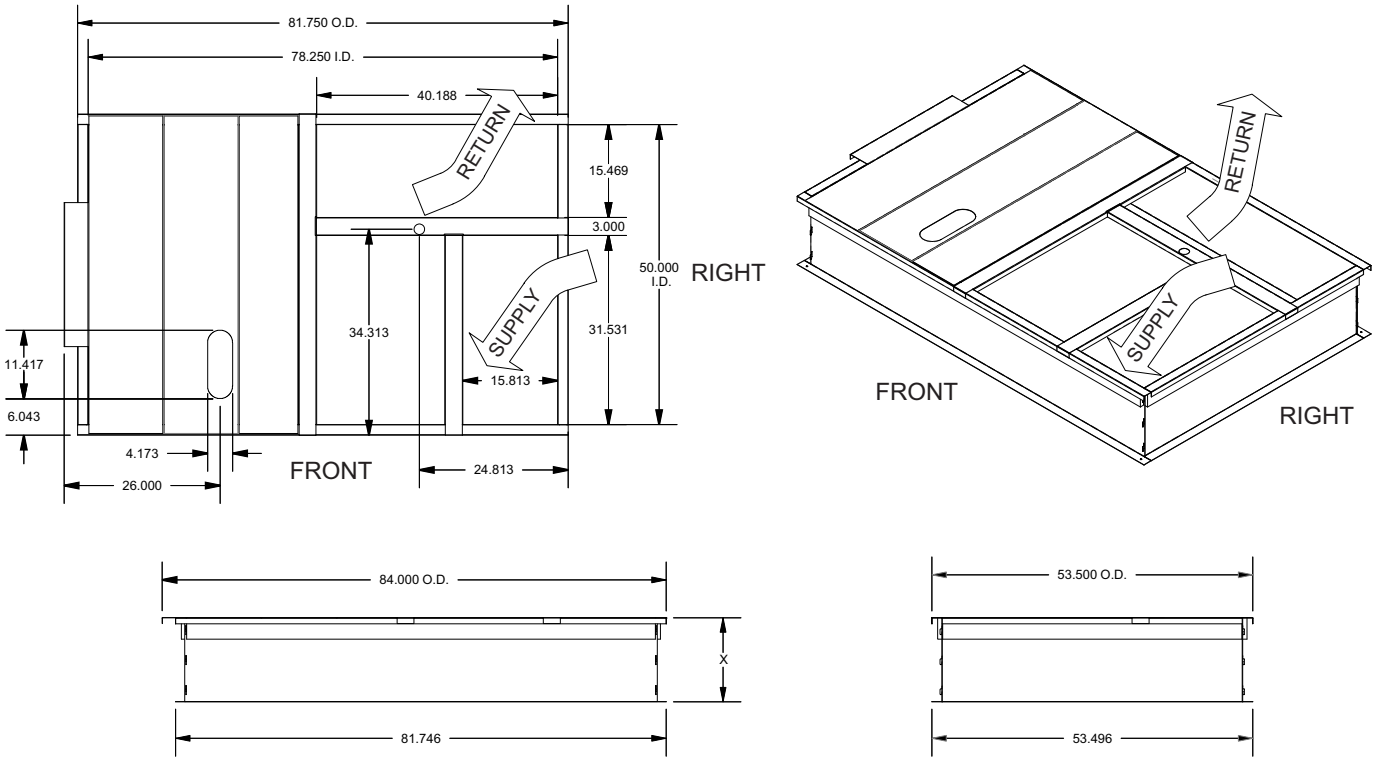

1RC0457 X= 14" Height
1RC0459 X= 24" Height

Notes:
1. Sides, ends, unit locator and cross support are 18-G90. Deck pans, R/A & S/A supports are 20-G90.
2. Full perimeter wood nailer.
3. Insulated deck pans.

Unit Models used with 1RC0457, 1RC0459 Roof Curb

	ZYA7	
ZX08	ZY07	ZL08
ZX09	ZY08	ZL09
ZX12	ZY09	ZL12
ZX14	ZY12	ZL14

NOTE: If utilities are required thru the base of the unit or thru the roof curb the following field installed accessories can be purchased thru your dealer or contractor:

1TB0402 - Thru the base electrical and thru the curb gas

1TB0404 - Thru the base electrical and gas

Economizer Options

Economizer Usage

Application	Description	Accessory Kit Number
Economizer Vertical Flow	Econ, DB, Vertical Flow, Small Footprint	2EE04706724
	Econ, DB, Vertical Flow, Large Footprint	2EE04706824
Economizer Horizontal Flow	Econ, DB, Horizontal Flow, Small Footprint, Short Cabinet	2EE04707024
	Econ, DB, Horizontal Flow, Small Footprint, Tall Cabinet	2EE04707124
	Econ, DB, Horizontal Flow, Large Footprint, Short Cabinet	2EE04707224
	Econ, DB, Horizontal Flow, Large Footprint, Tall Cabinet	2EE04707324
Power Exhaust Vertical Flow	Power Exhaust Vert Flow Small Footprint 208V-230V 1-ph	2PE04704206
	Power Exhaust Vert Flow Small Footprint 208V-230V 3-ph	2PE04704225
	Power Exhaust Vert Flow Small Footprint 460V 3-ph	2PE04704246
	Power Exhaust Vert Flow Small Footprint 575V 3-ph	2PE04704258
	Power Exhaust Vert Flow Large Footprint 208V-230V 1-ph	2PE04704306
	Power Exhaust Vert Flow Large Footprint 208V-230V 3-ph	2PE04704325
	Power Exhaust Vert Flow Large Footprint 460V 3-ph	2PE04704346
	Power Exhaust Vert Flow Large Footprint 575V 3-ph	2PE04704358
Power Exhaust Horizontal Flow	Power Exhaust Horiz Flow Small Footprint 208V-230V 1-ph	2PE04704406
	Power Exhaust Horiz Flow Small Footprint 208V-230V 3-ph	2PE04704425
	Power Exhaust Horiz Flow Small Footprint 460V 3-ph	2PE04704446
	Power Exhaust Horiz Flow Small Footprint 575V 3-ph	2PE04704458
	Power Exhaust Horiz Flow Large Footprint 208V-230V 1-ph	2PE04704506
	Power Exhaust Horiz Flow Large Footprint 208V-230V 3-ph	2PE04704525
	Power Exhaust Horiz Flow Large Footprint 460V 3-ph	2PE04704546
	Power Exhaust Horiz Flow Large Footprint 575V 3-ph	2PE04704558

Field Installed Vertical Flow Economizer

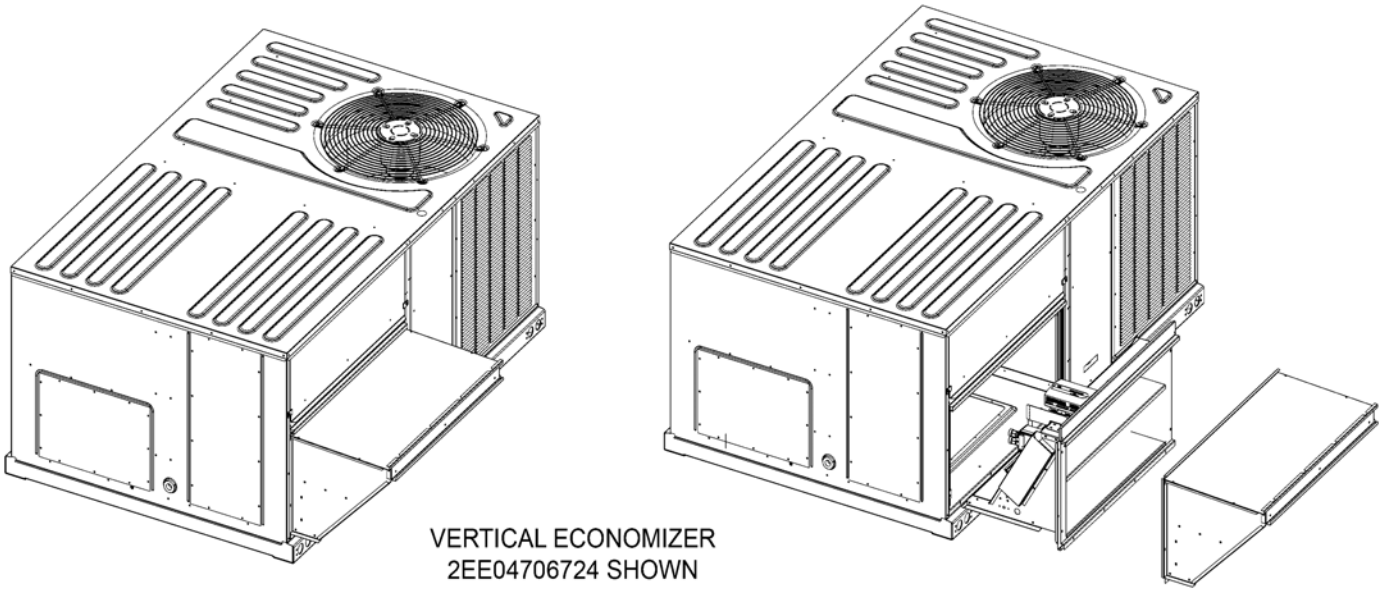

Field Installed Vertical Flow Economizer W/Power Exhaust

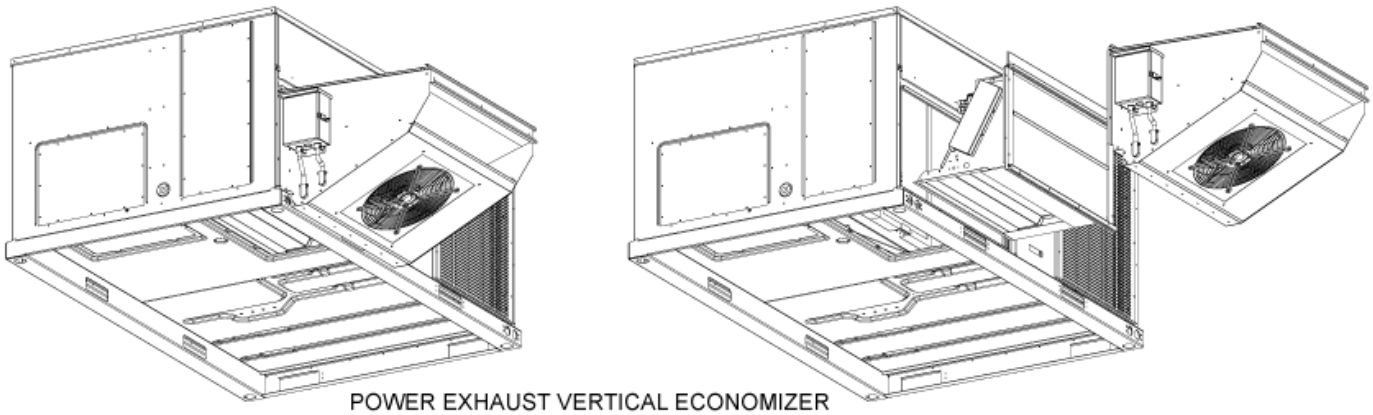

POWER EXHAUST VERTICAL ECONOMIZER
2PE04704206 SHOWN

Field Installed Horizontal Flow Economizer

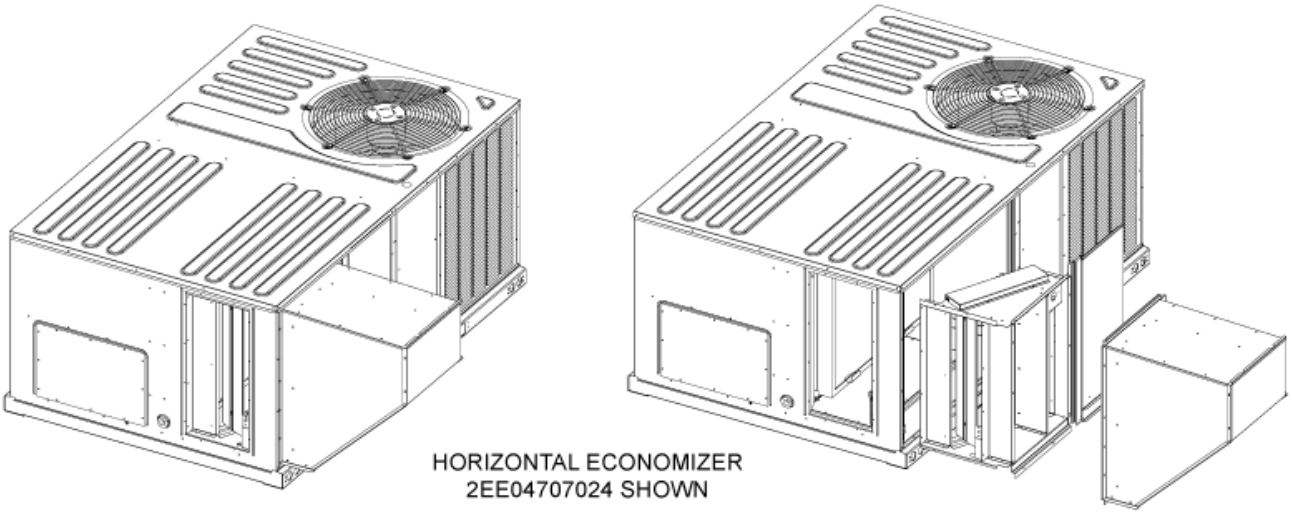

HORIZONTAL ECONOMIZER
2EE04707024 SHOWN

Field Installed Horizontal Flow Economizer W/Power Exhaust

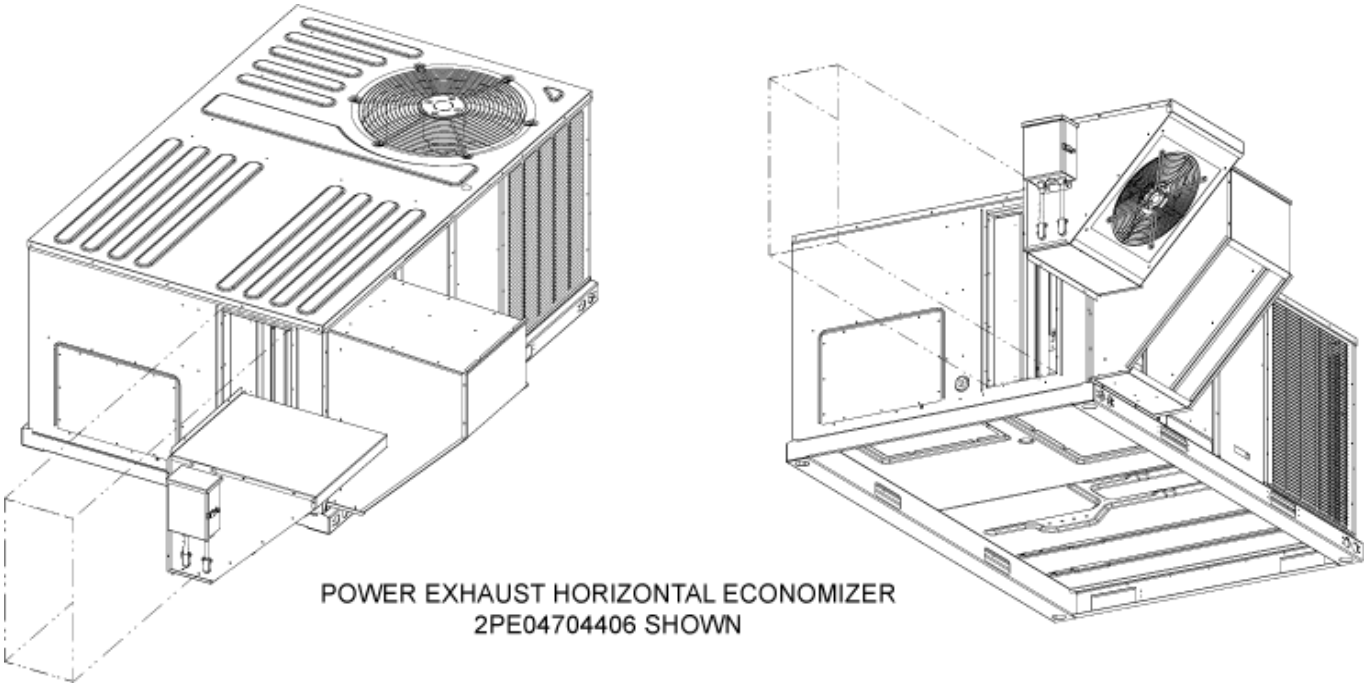

Guide Specifications

DUCTED SYSTEMS GUIDE MECHANICAL SPECIFICATIONS
SINGLE PACKAGE AIR CONDITIONERS

3 THRU 12-1/2 NOMINAL TONS

Core SERIES

Size Range:3 to 12-1/2 Tons Nominal Cooling

45,000 to 200,000 BTUH Nominal Gas Heating Output

Model Series: ZX, ZY, ZQ & ZL

DIVISION 23 – HEATING, VENTILATING, AND AIR-CONDITIONING (HVAC)

Number	Title

23 00 00 HEATING, VENTILATING, AND AIR-CONDITIONING (HVAC)

23 06 00 Schedules for HVAC
23 06 80 Schedules for Decentralized HVAC Equipment

23 06 80.13 Decentralized Unitary HVAC Equipment Schedule
23 06 80.13.A. Rooftop unit schedule

23 07 00 HVAC Insulation

23 07 16 HVAC Equipment Insulation

23 07 16.13 Decentralized, Rooftop Units:
23 07 16.13.A. Evaporator fan compartment:
1. Interior cabinet surfaces shall be insulated with a minimum 1/2- in. thick, minimum 1 1/2 lb density, flexible fiberglass insulation coated on the air side.
2. Insulation and adhesive shall meet NFPA 90A requirements for flame spread and smoke generation.

23 07 16.13.B. Gas heat compartment:
1. Aluminum foil- faced fiberglass insulation shall be used.
2. Insulation and adhesive shall meet NFPA 90A requirements for flame spread and smoke generation.

23 09 00 Instrumentation and Control for HVAC

23 09 13 Instrumentation and Control Devices for HVAC

23 09 13.23 Sensors and Transmitters

23 09 13.23.A. Thermostats

1. Thermostat must
   a. energize “G” when calling for fan only or continuous fan.
   b. have capability to energize 2 different stages of cooling, and 2 different stages of heating.
   c. include capability for occupancy scheduling.

23 09 23 Direct- digital Control system for HVAC

23 09 23.13 Decentralized, Rooftop Units:

23 09 23.13.A. Smart Equipment™ (Unit based microprocessor control)

1. Shall be ASHRAE 62 compliant.
2. Shall include an integrated economizer controller to support an economizer with 2 to 10 v DC actuator input.
3. Controller shall accept the following inputs: space temperature, setpoint adjustment, outdoor air temperature, indoor air quality, outdoor air quality, indoor relative humidity, compressor lockout, fire shutdown, enthalpy, fan status, remote time clock/door switch.
4. Shall accept a CO2 sensor in the conditioned space, and be Demand Control Ventilation ready.
5. Unit shall provide surge protection for the controller through a circuit breaker.
6. Shall have an LED display independently showing the status of activity on the communication bus, and processor operation.
7. Software upgrades will be accomplished by local download. Software upgrades through chip replacements are not allowed.

A. Unit shall be complete with self-contained low-voltage control circuit protected by a resettable circuit breaker on the 24-volt transformer side.

B. Unit shall incorporate a lockout circuit which provides reset capability at the space thermostat or base unit should any of the following standard safety devices trip and shut off compressor:

C. Loss-of-charge/Low-pressure switch.

D. High-pressure switch.

E. Freeze-protection temperature sensor, evaporator coil. If any of the above safety devices trip, an LED (light-emitting diode) indicator shall flash a diagnostic code that indicates which safety switch has tripped.

F. Unit shall incorporate “AUTO RESET” compressor over temperature, over current protection.

G. Unit shall operate with conventional thermostat designs and have a low voltage terminal strip for easy hook-up.

H. Unit control board shall have on-board diagnostics and fault code display.

I. Standard controls shall include anti-short cycle and low voltage protection, and permit cooling operation down to 0 ºF.

J. Control board shall monitor each refrigerant safety switch independently.

K. Control board shall retain last 5 fault codes in non-volatile memory, which will not be lost in the event of a power loss.

23 09 23.13.B. RTU Open - multi- protocol, direct digital controller:

1. Shall be ASHRAE 62 compliant.
2. Shall include built- in protocol for BACNET , Modbus , and Johnson N2.
3. Shall allow access of up to 62 network variables (SNVT). Shall be compatible with all open controllers
4. Baud rate Controller shall be selectable using a dip switch.
5. Shall have an LED display independently showing the status of serial communication, running, errors, power, all digital outputs, and all analog inputs.

6. Shall accept the following inputs: space temperature, setpoint adjustment, outdoor air temperature, indoor air quality, outdoor air quality, compressor lock- out, fire shutdown, enthalpy switch, and fan status/filter status/ humidity/ remote occupancy.
7. Software upgrades will be accomplished by either local or remote download. No software upgrades through chip replacements are allowed.

23 09 33 Electric and Electronic Control System for HVAC

23 09 33.13 Decentralized, Rooftop Units:

23 09 33.13.A. General:

1. Shall be complete with self- contained low- voltage control circuit protected by a resettable circuit breaker on the 24- v transformer side. Transformer shall have 75VA capability.
2. Shall utilize color- coded wiring.
3. Shall include a central control terminal board to conveniently and safely provide connection points for vital control functions such as: smoke detectors, phase monitor, gas controller, economizer, thermostat, DDC control options, and low and high pressure switches.
4. The heat exchanger shall be controlled by an integrated gas controller (IGC) microprocessor. See heat exchanger section of this specification.

23 09 33.23.B. Safeties:

1. Compressor over- temperature, over- current. High internal pressure differential.
2. Low- pressure switch.
   a. Units with 2 compressors shall have different sized connectors for the circuit 1 and circuit 2 low **and high** pressure switches. They shall physically prevent the cross- wiring of the safety switches between circuits 1 and 2.
   b. Low pressure switch shall use different color wire than the high pressure switch. The purpose is to assist the installer and service technician to correctly wire and or troubleshoot the rooftop unit.
3. High- pressure switch.
   a. Units with 2 compressors shall have different sized connectors for the circuit 1 and circuit 2 **low and** high pressure switches. They shall physically prevent the cross- wiring of the safety switches between circuits 1 and 2.
   b. High pressure switch shall use different color wire than the low pressure switch. The purpose is to assist the installer and service technician to correctly wire and or troubleshoot the rooftop unit.
4. Automatic reset, motor thermal overload protector.
5. Heating section shall be provided with the following minimum protections:
   a. High- temperature limit switches.
   b. Induced draft motor speed sensor.
   c. Flame roll-out switch.
   d. Flame proving controls

23 40 13 Panel Air Filters

23 40 13.13 Decentralized, Rooftop Units:

23 40 13.13.A. Standard filter section

1. Shall consist of factory- installed, low velocity, disposable 2” or 4” thick fiberglass filters of commercially available sizes.
2. Units can accept 2” or 4” filters and have a field convertible toolless filter rack
3. Filters shall be accessible through an access panel with toolless removal as described in the unit cabinet section of this specification (23 81 19.13.H).

23 81 19 Self- Contained Air Conditioners

23 81 19.13 Small- Capacity Self- Contained Air Conditioners

23 81 19.13.A. General

1. Outdoor, rooftop mounted, electrically controlled, heating and cooling unit utilizing a fully hermetic scroll compressor(s) for cooling duty and gas combustion for heating duty.
2. Factory assembled, single- piece heating and cooling rooftop unit. Contained within the unit enclosure shall be all factory wiring, piping, controls, and special features required prior to field start- up.
3. Unit shall use environmentally sound, R-410A refrigerant.
4. Unit shall be installed in accordance with the manufacturer's instructions.
5. Unit must be selected and installed in compliance with local, state, and federal codes.

23 81 19.13.B. Quality Assurance

1. Unit meets ASHRAE 90.1 minimum efficiency requirements.
2. Unit shall be rated in accordance with AHRI Standards 210/240 or 340/360.
3. Unit shall be designed to conform to ASHRAE 15.
4. Unit shall be UL- tested and certified in accordance with ANSI Z21.47 -2012/CSA 2.3-2012, CSA C22.2 No. 236-11 (UL 1995) 4th edition and CSA C22.2 No. 3 - M 1988.
5. Insulation and adhesive shall meet NFPA 90A requirements for flame spread and smoke generation.
6. Unit casing shall be capable of withstanding 750-hour salt spray exposure per ASTM B117 (scribed specimen).
7. Unit shall be designed in accordance with ISO 9001, and shall be manufactured in a facility registered by ISO 9001.
8. Roof curb shall be designed to conform to NRCA Standards.
9. Unit shall be subjected to a completely automated run test on the assembly line. The data for each unit will be stored at the factory, and must be available upon request.
10. Unit shall be designed in accordance with UL Standard 1995, including tested to withstand rain.
11. Unit shake tested to assurance level 1, ASTM D4169 to ensure shipping reliability.
12. High Efficient Motors listed shall meet section 313 of the Energy Independence and Security Act of 2007 (EISA 2007).

23 81 19.13.C. Delivery, Storage, and Handling

1. Unit shall be stored and handled per manufacturer's recommendations.

23 81 19.13.E. Project Conditions

1. As specified in the contract.

23 81 19.13.F. Operating Characteristics

1. Unit shall be capable of starting and running at 125°F (52°C) ambient outdoor temperature, meeting maximum load criteria of AHRI Standard 210/240 or 340/360 at ± 10% voltage.
2. Compressor with standard controls shall be capable of operation down to 0°F (2°C), ambient outdoor temperatures. See below for head pressure control package or winter start kit.
3. Unit shall discharge supply air vertically or horizontally as shown on contract drawings.
4. Unit shall be factory configured for vertical supply & return configurations.
5. Unit shall be field convertible from vertical to horizontal airflow on all models.
6. Unit shall be capable of mixed operation: vertical supply with horizontal return or horizontal supply with vertical return.

23 81 19.13.G. Electrical Requirements

1. Main power supply voltage, phase, and frequency must match those required by the manufacturer.

23 81 19.13.H. Unit Cabinet

1. **Unit cabinet shall be constructed of galvanized steel with exterior surfaces coated with a non-chalking, powder paint finish, certified at 750-hour salt spray test per ASTM-B117 standards.**
2. Evaporator fan compartment interior cabinet insulation shall conform to AHRI Standards 210/240 or 340/360 minimum exterior sweat criteria. Interior surfaces shall be insulated with a minimum 1/2- in. thick, 1 1/2 lb density, flexible fiberglass insulation, neoprene coated on the air side. Aluminum foil- faced fiberglass insulation shall be used in the gas heat compartment. Fan shall be a belt drive assembly and include an adjustable pitch motor pulley. Job site selected brake horsepower shall not exceed the motors nameplate horsepower rating plus the service factor (Only premium efficiency motors have hp rating on the nameplate). Units shall be designed to operate within the service factor. Fan wheel shall be double inlet type with forward curve blades, dynamically balanced to operate smoothly throughout the entire range of operation. Airflow design shall be constant volume. Bearings shall be sealed and permanently lubricated for longer life and no maintenance.

Condenser Fan Assembly: The outdoor fans shall be of the direct drive type, discharge air vertically, have aluminum blades riveted to corrosion resistant steel spider brackets and shall be dynamically balanced for smooth operation. The outdoor fan motors shall have permanently lubricated bearings internally protected against overload conditions and staged independently.

3. Base of unit shall have a minimum of four locations for thru- the- base gas and electrical connections (factory installed or field installed), standard.
4. Base Rail
   a. Unit shall have base rails on a minimum of 4 sides.
   b. Holes shall be provided in the base rails for rigging shackles to facilitate maneuvering and overhead rigging.
   c. Holes shall be provided in the base rail for moving the rooftop by fork truck.
   d. Base rail shall be a minimum of 16 gauge thickness.
5. Condensate pan and connections:
   a. Shall be an internally sloped condensate drain pan made of a non- corrosive material. b. Shall comply with ASHRAE Standard 62.
   c. Shall use a 3/4” - 14 NPT drain connection, possible either through the bottom or side of the drain pan. Connection shall be made per manufacturer’s recommendations.
6. Top panel:
   a. Shall be a single piece top panel.
7. Gas Connections:
   a. All gas piping connecting to unit gas valve shall enter the unit cabinet at a single location on side of unit
   b. Thru- the- base capability
      (1.) Standard unit shall have a thru- the- base gas- line location using a raised, embossed portion of the unit base-pan.
      (2.) Optional, factory- approved, water- tight connection method must be used for thru- the- base gas connections.
      (3.) No base-pan penetration, other than those authorized by the manufacturer, is permitted.
8. Electrical Connections
   a. All unit power wiring shall enter unit cabinet at a single, factory- prepared, knockout location. b. Thru- the- base capability.
      (1.) Standard unit shall have a thru- the- base electrical location (s) using a raised, embossed portion of the unit base-pan.
      (2.) Optional, factory- approved, water- tight connection method must be used for thru- the- base electrical connections.
      (3.) No base-pan penetration, other than those authorized by the manufacturer, is permitted.

9. Component access panels (standard)
   a. Cabinet panels shall be easily removable for servicing.
   b. Unit shall have one factory installed, toolless, removable, filter access panel.
   c. Panels covering control box, indoor fan, indoor fan motor, gas components (where applicable), and compressors shall have a molded composite handles.
   d. Handles shall be UV modified, composite. They shall be permanently attached, and recessed into the panel.
   e. Screws on the vertical portion of all removable access panel shall engage into heat resistant, molded composite collars.
   f. Collars shall be removable and easily replaceable using manufacturer recommended parts.

23 81 19.13.I. Gas Heat

1. General
   a. Heat exchanger shall be an induced draft design. Positive pressure heat exchanger designs shall not be allowed.
   b. Shall incorporate a direct- spark ignition system and redundant main gas valve.
   c. Gas supply pressure at the inlet to the rooftop unit gas valve must match that required by the manufacturer.
2. The heat exchanger shall be controlled by an integrated gas controller (IGC) microprocessor.
   a. IGC board shall notify users of fault using an LED (light- emitting diode).
   b. IGC board shall contain algorithms that modify evaporator- fan operation to prevent future cycling on high temperature limit switch.
   c. Unit shall be equipped with anti- cycle protection with one short cycle on unit flame roll-out switch or 4 continuous short cycles on the high temperature limit switch. Fault indication shall be made using an LED.
3. Standard Heat Exchanger construction
   a. Heat exchanger shall be of the tubular- section type constructed of a minimum of 20- gauge steel coated with a nominal 1.2 mil aluminum- silicone alloy for corrosion resistance.
   b. Burners shall be of the in- shot type constructed of aluminum- coated steel.
   c. Burners shall incorporate orifices for rated heat output up to 2000 ft (610m) elevation. Additional accessory kits may be required for applications above 2000 ft (610m) elevation, depending on local gas supply conditions.
   d. Each heat exchanger tube shall contain multiple dimples for increased heating effectiveness.
4. Optional Stainless Steel Heat Exchanger construction a. Use energy saving, direct- spark ignition system. b. Use a redundant main gas valve.
   c. Burners shall be of the in- shot type constructed of aluminum- coated steel.
   d. All gas piping shall enter the unit cabinet at a single location on side of unit (horizontal plane).
   e. The optional stainless steel heat exchanger shall be of the tubular- section type, constructed of a minimum of 20- gauge type 409 stainless steel.
   f. Type 409 stainless steel shall be used in heat exchanger tubes and vestibule plate
   g. Complete stainless steel heat exchanger allows for greater application flexibility.
1. Optional Low NOx Heat Exchanger construction
   a. Primary tubes and vestibule plates on low NOx units shall be 409 stainless steel. Other components shall be aluminized steel.
2. Induced draft combustion motor and blower
   a. Shall be a direct- drive, single inlet, forward- curved centrifugal type.
   b. Shall be made from steel with a corrosion- resistant finish.
   c. Shall have permanently lubricated sealed bearings. d. Shall have inherent thermal overload protection.
   d. Shall have an automatic reset feature.

23 81 19.13.J. Coils

1. Standard Aluminum Fin/Copper Tube Coils:
   a. Standard evaporator and condenser coils shall have aluminum lanced plate fins mechanically bonded to seamless internally grooved copper tubes with all joints brazed.
   b. Evaporator coils shall be leak tested to 150 psig, pressure tested to 450 psig, and qualified to CSA C22.2 No. 236-11 (UL 1995) 4th edition burst test at 1775 psig.
   c. Condenser coils shall be leak tested to 150 psig, pressure tested to 650 psig, and qualified to CSA C22.2 No. 236-11 (UL 1995) 4th edition burst test at 1980 psig.
2. Optional EFIN- coated aluminum- fin evaporator and condenser coils:
   a. Shall have a durable epoxy- phenolic coating to provide protection in mildly corrosive coastal environments.
   b. Coating shall be applied to the aluminum fin stock prior to the fin stamping process to create an inert barrier between the aluminum fin and copper tube.
   c. Epoxy- phenolic barrier shall minimize galvanic action between dissimilar metals.

23 81 19.13.K. Refrigerant Components

1. Refrigerant circuit shall include the following control, safety, and maintenance features:
   a. Thermostatic Expansion Valve (TXV) shall help provide optimum performance across the entire operating range. Shall contain removable power element to allow change out of power element and bulb without removing the valve body. (Orifice on ZX08, ZX09, ZX12, ZQ04, ZQ05 & ZQ6)
   b. Refrigerant filter drier - Solid core design.
   c. Service gauge connections on suction and discharge lines.
   d. Pressure gauge access through a specially designed access port in the top panel of the unit.
2. There shall be gauge line access port in the skin of the rooftop, covered by a black, removable plug.

a. The plug shall be easy to remove and replace.

b. When the plug is removed, the gauge access port shall enable maintenance personnel to route their pressure gauge lines.

   c. This gauge access port shall facilitate correct and accurate condenser pressure readings by enabling the reading with the compressor access panel on.
   d. The plug shall be made of a leak proof, UV- resistant, composite material.
3. Compressors
   a. Unit shall use fully hermetic, scroll compressor for each independent refrigeration circuit.
   b. Compressor motors shall be cooled by refrigerant gas passing through motor windings.
   c. Compressors shall be internally protected from high discharge temperature conditions.
   d. Compressors shall be protected from an over- temperature and over- amperage conditions by an internal, motor overload device.
   e. Compressor shall be factory mounted on rubber grommets.
   f. Compressor motors shall have internal line break thermal, current overload and high pressure differential protection.
   g. Crankcase heaters shall not be required for normal operating range, unless provided by the factory.

23 81 19.13.L. Filter Section

1. Filters access is specified in the unit cabinet section of this specification.
3. Shall consist of factory- installed, low velocity, throw- away 2” or 4” thick fiberglass filters.
3. Units can accept 2” or 4” filters and have a field convertible toolless

23 81 19.13.M. Evaporator Fan and Motor

1. Evaporator fan motor:
   a. Shall have permanently lubricated bearings.

b. Shall have inherent automatic reset thermal protection (Only on single-phase, belt-drive motors, three - phase, belt-drive motors have internal thermostat used for external line-break control.).

2. Electric Drive (Direct Drive) X13 – 5 Speed/Torque Evaporator Fan:
   a. Multi- speed motor with easy quick adjustment settings.
   b. Blower fan shall be double- inlet type with forward- curved blades.
   c. Shall be constructed from steel with a corrosion resistant finish and dynamically balanced.
3. Belt- driven Evaporator Fan:
   a. Belt drive shall include an adjustable- pitch motor pulley.
   b. Shall use sealed, permanently lubricated ball- bearing type.
   c. Blower fan shall be double- inlet type with forward- curved blades.
   d. Shall be constructed from steel with a corrosion resistant finish and dynamically balanced.

23 81 19.13.N. Condenser Fans and Motors

The outdoor fans shall be of the direct drive type, discharge air vertically, have aluminum blades riveted to corrosion resistant steel spider brackets and shall be dynamically balanced for smooth operation. The outdoor fan motors shall have permanently lubricated 60°C ball bearings internally protected against overload conditions and staged independently. A cleaning window shall be provided on two sides of the units for coil cleaning.

1. Condenser fan motors:
   a. Shall be a totally enclosed motor.
   b. Shall use permanently lubricated bearings.
   c. Shall have inherent thermal overload protection with an automatic reset feature.
   d. All models Shall use a shaft- down design except shaft- up on ZX14, ZY12, and ZL12-14 size with rain shield.
2. Condenser Fans:
   a. Shall be a direct- driven propeller type fan.
   b. Shall have galvanized steel blades riveted to corrosion- resistant steel spiders and shall be dynamically balanced.

23 81 19.13.O. Special Features Options and Accessories

1. Intelli*Speed*™ - Staged Air Volume System (ZX08-14, ZY08-12 and ZL08-14)
   a. Evaporator fan motor:
      (1.) Shall have permanently lubricated bearings.
      (2.) Shall have a maximum continuous BHP rating for continuous duty operation; no safety factors above that rating.
      (3.) Shall be Variable Frequency duty and 2- speed control, or 3-speed for ZL08-14 models.
2. Variable Frequency Drive (VFD). Only available on 2- speed or 3-speed models indoor fan motor option (Intelli*Speed*™):
   a. Shall be installed inside the unit cabinet, mounted, wired and tested.
   b. Shall contain Electromagnetic Interference (EMI) frequency protection.
   c. Insulated Gate Bi- Polar Transistors (IGBT) used to produce the output pulse width modulated (PWM) waveform.
   d. Built in LED display and controls. Does not require additional kit or options.
   e. RS485 capability standard.
   f. Electronic thermal overload protection.
   g. 5% swinging chokes for harmonic reduction and improved power factor.
   h. All printed circuit boards shall be conformal coated.
3. Standard Integrated Economizers:

a. Integrated, gear- driven opposing modulating blade design type capable of simultaneous economizer and compressor operation.
b. Independent modules for vertical or horizontal return configurations shall be available. Vertical return modules shall be available as a factory installed option.
c. Damper blades shall be galvanized steel with composite gears. Plastic or composite blades on intake or return shall not be acceptable.
d. Shall include all hardware and controls to provide free cooling with outdoor air when temperature and/or humidity are below set-points.
e. Shall be equipped with gear driven dampers for both the outdoor ventilation air and the return air for positive air stream control.
f. Standard models shall be equipped with low- leakage dampers, not to exceed 2% leakage at 1 in. wg pressure differential. Economizers will come with Actuator and module that is tied to Smart Equipment™:
(1.) Combined minimum and DCV maximum damper position potentiometers with compressor staging relay.
(2.) Functions with solid state analog enthalpy or dry bulb changeover control sensing.
(3.) Contain LED indicates for: when free cooling is available when module is in DCV mode when exhaust fan contact is closed

4. Two- Position Damper
   a. Damper shall be a Two- Position Damper. Damper travel shall be from the full closed position to the field adjustable %- open setpoint.
   b. Damper shall include adjustable damper travel from 25% to 100% (full open).
   c. Damper shall include single or dual blade, gear driven dampers and actuator motor.
   d. Actuator shall be direct coupled to damper gear. No linkage arms or control rods shall be acceptable. e. Damper will admit up to 100% outdoor air for applicable rooftop units.
   f. Damper shall close upon indoor (evaporator) fan shutoff and/or loss of power.
   g. The damper actuator shall plug into the rooftop unit's wiring harness plug. No hard wiring shall be required.
   h. Outside air hood shall include aluminum water entrainment filter.
5. Manual damper
   a. Manual damper package shall consist of damper, air inlet screen, and rain hood which can be preset to admit up to 25 or 50% outdoor air for year round ventilation.
6. Condenser Coil Hail Guard Assembly (Factory and Field option available on all models):
   a. Shall protect against damage from hail.
   b. Shall be of louvered style.
7. Unit- Mounted, Non- Fused Disconnect Switch: (Verify on the unit nameplate that the disconnect is properly sized for the application. Units with field installed electric heat may exceed the factory installed disconnect amperage rating.)
   a. Switch shall be factory- installed, internally mounted.
   b. National Electric Code (NEC) and UL approved non- fused switch shall provide unit power shutoff.
   c. Shall be accessible from outside the unit.
   d. Shall provide local shutdown and lockout capability.
8. Thru- the- Base Connectors:
   a. Kits shall provide connectors to permit gas and electrical connections to be brought to the unit through the unit base-pan.
   b. Minimum of four connection locations per unit.
9. Propeller Power Exhaust:
   a. Power exhaust shall be used in conjunction with an integrated economizer.
   b. Independent modules for vertical or horizontal return configurations shall be available.

c. Horizontal power exhaust is shall be mounted in return ductwork.
d. Power exhaust shall be controlled by economizer controller operation. Exhaust fans shall be energized when dampers open past the 0- 100% adjustable setpoint on the economizer control.

10. Roof Curbs (Vertical):
    a. Full perimeter roof curb with exhaust capability providing separate air streams for energy recovery from the exhaust air without supply air contamination.
    b. Formed galvanized steel with wood nailer strip and shall be capable of supporting entire unit weight. c. Permits installation and securing of ductwork to curb prior to mounting unit on the curb.
11. High Altitude Gas Conversion Kit:
    a. Package shall contain all the necessary hardware and instructions to convert a standard natural gas.
12. Outdoor Air Enthalpy Sensor:
    a. The outdoor air enthalpy sensor shall be used to provide single enthalpy control. When used in conjunction with a return air enthalpy sensor, the unit will provide differential enthalpy control. The sensor allows the unit to determine if outside air is suitable for free cooling.
13. Return Air Enthalpy Sensor:
    a. The return air enthalpy sensor shall be used in conjunction with an outdoor air enthalpy sensor to provide differential enthalpy control.
14. Indoor Air Quality (CO_2) Sensor:
    a. Shall be able to provide demand ventilation indoor air quality (IAQ) control.
    b. The IAQ sensor shall be available in duct mount, wall mount, or wall mount with LED display. The set- point shall have adjustment capability.
    b. Shall be environmental compensated with differential sensing for reliable, stable, and drift- free sensitivity.
    c. Shall use magnet- activated test/reset sensor switches.
    d. Shall have tool- less connection terminal access.

Subject to change without notice. Printed in U.S.A.
Copyright © 2020 by Johnson Controls, Inc. All rights reserved.
1068153-BTG-Z-0120
Supersedes: 1068153-BTG-Y-0519

York International Corporation
5005 York Drive
Norman, OK 73069