PACKAGED GAS / ELECTRIC

LGT

ENLIGHT ROOFTOP UNITS

High Efficiency | Lennox® CORE Controller | Environ™ Coil | R-454B | 60Hz

COMMERCIAL
PRODUCT SPECIFICATIONS (EHB)

3 to 6 Tons
Net Cooling Capacity | 36,000 to 69,000 Btuh
Gas Input Heat Capacity | 65,000 to 150,000 Btuh

MODEL NUMBER IDENTIFICATION

L G T 060 H 5 E B 1 Y

Brand
L = Lennox®

Unit Type
G = Packaged Gas Heat w/ Electric Cooling

Family
T = Enlight Series

Nominal Cooling Capacity - Tons
036 = 3 Tons
048 = 4 Tons
060 = 5 Tons
072 = 6 Tons

Cooling Efficiency
H = High Efficiency

Refrigerant Type
5 = R-454B

Voltage
P = 208/230V-1 phase-60Hz
Y = 208/230V-3 phase-60Hz
G = 460V-3 phase-60Hz
J = 575V-3 phase-60Hz

Minor Design Sequence
1 = 1st Revision

Heating Type
B = Standard Gas Heat, 2 Stage, Low NOx
Q = Medium Gas Heat, 2 Stage, Low NOx
X = High Gas Heat, 2 Stage, Low NOx

Blower Type
E = ECM (MSAV®) Direct Drive Blower Motor

Form Number 211109 | July 2025
Supersedes all previous versions

FEATURE HIGHLIGHTS

Enlight rooftop units featuring the Lennox® CORE Control System create a bright future through a highly energy-efficient and environmentally sustainable design. Comprehensive configurations meet a wide range of applications, making it the most flexible product line Lennox has to offer.

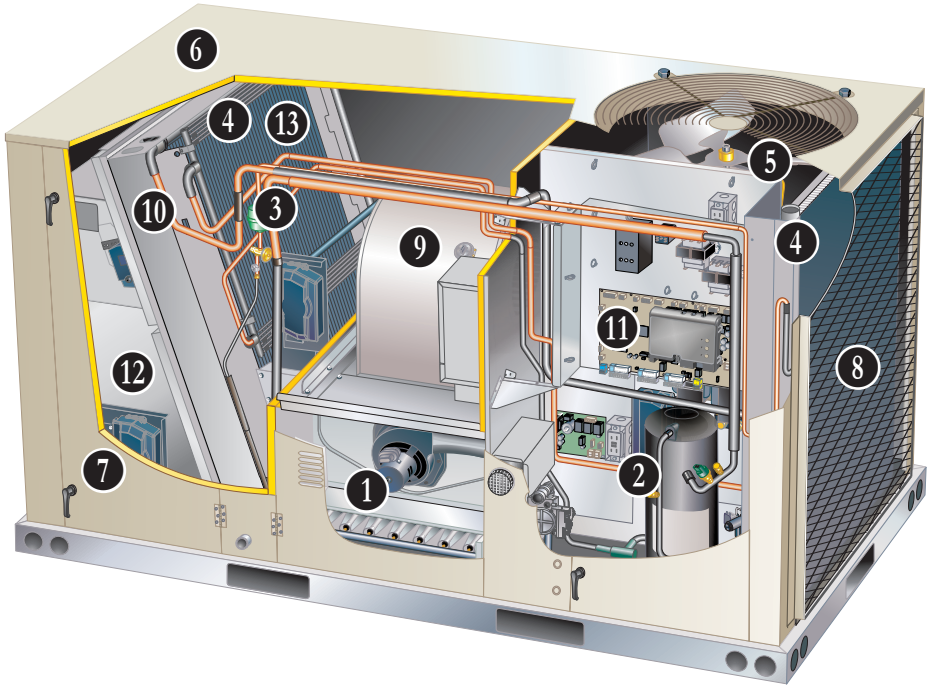

1. Aluminized steel inshot burners
2. Two-Stage Compressor
3. Filter/Drier
4. Environ™ Coil System
5. Variable Speed (ECM) Fan Motor
6. Heavy Gauge Steel Cabinet
7. Hinged Access Panels
8. Combination Coil/Hail Guards (option)
9. Supply Air Direct Drive (ECM) Blower
10. Air Filters
11. Lennox® CORE Control System
12. Economizer (option)
13. Humiditrol® Dehumidification (option)

CONTENTS

Approvals And Warranty . . . 3
Blower Data . . . 25
- 0.5 Hp . . . 25
- 1.0 Hp . . . 26
- 1.5 Hp . . . 27
Control System . . . 8
Dimensions . . . 35
- Accessories . . . 36
- Unit . . . 35
Electrical Data . . . 31
Features And Benefits . . . 3
High Altitude Derate . . . 21
Humiditrol® Dehumidification System Option . . . 12
Humiditrol® Dehumidification System Ratings . . . 24
Model Number Identification . . . 1
Optional Conventional Temperature Control Systems . . . 13
Options / Accessories . . . 17
Outdoor Sound Data . . . 33
Sequence Of Operation . . . 16
Specifications . . . 20
- Low Nox Gas Heat . . . 21
Unit Clearances . . . 34
Weight Data . . . 33
- Unit . . . 33

APPROVALS AND WARRANTY

APPROVALS

- All 3-5 ton models are AHRI Standard 210/240-2024 certified
- All 6 ton models are AHRI Standard 340/360-2022 certified
- ENERGY STAR® certified (certain models)
- ETL and CSA listed
- All models are ASHRAE 90.1-2025 compliant
- All models meet DOE 2023 energy efficiency standards
- All models are listed to UL 60335-1 and UL 60335-2-40 and meet the Refrigerant Detection and Dissipation Requirements
- Components are bonded for grounding to meet safety standards for servicing required by ETL, NEC and CEC
- All 6 ton models meet California Code of Regulations, Title 24 and ASHRAE 90.1-2025 Section 6.4.3.10 requirements for staged airflow
- All models have been sound tested in accordance with test conditions included in AHRI Standard 270 or 370
- ISO 9001 Registered Manufacturing Quality System
- All models have HCAI (formerly OSHPD) OSP and Special Seismic Certification (Number: OSP-0596), and meet 2021 International Building Code (IBC), 2022 California Building Code (CBC) ASCE 7, and ICC-ES AC156
- All models have FSA approval and are compliant with standard ASCE 7-22 (ASD) and the Florida Building Code Eighth Edition (2023)
- Units are charged with virgin refrigerant to comply with NYCRR Part 494
- All models are fully charged and run tested to verify unit operation and functionality

California Only

- These gas units do not meet the South Coast Air Quality Management District (SCAQMD) Rule 1111 and San Joaquin Valley Air Pollution Control District (SJVAPCD) Rule 4905 NOx emission limit (14 ng/J) and cannot be installed within the SCAQMD and SJVAPCD areas
- These gas units are approved by the California Energy Commission and meets California Nitrogen Oxides Standard (NOx) limits of 40 ng/J

WARRANTY

- Aluminized Heat Exchanger - Limited ten years
- Stainless Steel Heat Exchanger (optional) - Limited fifteen years
- Compressors - Limited five years
- Environ™ Coil System - Limited three years
- Lennox® CORE Unit Controller - Limited three years
- High Performance Economizers (optional) - Limited five years
- All other covered components - Limited one year

FEATURES AND BENEFITS

HEATING SYSTEM

Heat Exchanger

1
- Aluminized steel inshot burners
- Direct spark ignition
- Electronic flame sensor
- Combustion air inducer
- Redundant automatic single or dual stage gas valve with manual shut-off

Heat Exchanger

- Tubular construction, aluminized steel, life cycle tested

NOTE - Optional Stainless Steel Heat Exchanger is required if mixed air temperature is below 45°F.

Limit Controls

- Factory installed, redundant limit controls with fixed temperature setting
- Heat limit controls protect heat exchanger and other components from overheating

Safety Switches

- Flame roll-out switch, flame sensor and combustion air inducer proving switch protect system operation
- All safety switches are monitored by the Lennox® CORE Unit Controller and diagnostic information is reported and recorded

HEATING SYSTEM (continued)

Required Selections

Gas Input Choice - Order one:
- Standard Gas Heat (2 Stage) 53,000/65,000 Btuh
- Medium Gas Heat (2 Stage) 81,000/108,000 Btuh
- High Gas Heat (2 Stage) 113,000/150,000 Btuh
- See Gas Heat Specifications Tables on page 21

NOTE - All models are furnished with Low NOx (40 ng/J) gas heat.

Options/Accessories

Factory Installed

Stainless Steel Heat Exchanger
- Required if mixed air temperature is below 45 °F

Vertical Vent Extension Kit
- Use to exhaust flue gases vertically above unit
- Required when unit vent is too close to fresh air intakes per building codes
- Prevents ice formation on intake louvers
- Kit contains vent transition, drain cap, and installation hardware

NOTE - Straight vent pipe (3 in. B-Vent), vent tee and vent cap are not furnished and must be field supplied. Refer to kit instructions for additional information.

Field Installed

Combustion Air Intake Extensions
- Recommended for use with existing flue extension kits in areas where high snow can block intake air

Low Temperature Vestibule Heater
- Extends gas heat operation from -40°F (standard) down to -60°F
- Electric heater automatically controls minimum temperature in gas burner compartment when temperature falls below -40°F

LPG/Propane Kits
- Conversion kit to field change over units from Natural Gas to LPG/Propane

COOLING SYSTEM

- Designed to maximize sensible and latent cooling performance at design conditions
- System can operate from 0°F to 125°F without any additional controls

R-454B Refrigerant
- Low GWP (Global Warming Potential)
- Zero ODP (Ozone Depletion Potential)
- Low Toxicity/Lower Flammability - A2L
- Unit is factory pre-charged

2 Two-Stage Compressor
- Two-stage scroll compressors on all models for high performance, reliability, quiet operation, and increased part-load efficiency
- Resiliently mounted on rubber grommets for quiet operation

Compressor Crankcase Heater
- Protects against refrigerant migration that can occur during low ambient operation or during extended off cycles

Thermal Expansion Valve
- Ensures optimal performance throughout the application range
- Removable element head

3 Filter/Drier
- High capacity filter/drier protects the system from dirt and moisture

High Pressure Switch
- Protects the compressor from overload conditions such as dirty condenser coils, blocked refrigerant flow, or loss of outdoor fan operation

Low Pressure Switch
- Protects the compressor from low pressure conditions such as low refrigerant charge or low/no airflow

Indoor Coil Freeze Protection
- Protects the evaporator coil from damaging ice build-up due to conditions such as low/no airflow or low refrigerant charge

4 Environ™ Coil System
- Condenser and evaporator coil
- Coils features lightweight, all aluminum brazed fin construction
- Constructed of three components:
  - A flat extrusion tube
  - Fins in-between the flat extrusion tube
  - Two refrigerant manifolds

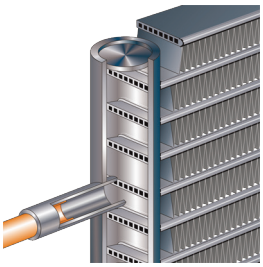

Environ™ Coil System Features:
- Improved heat transfer performance due to high primary surface area (flat tubes) versus secondary surface (fins)
- High durability
- All aluminum construction
- Fewer brazed joints
- Compact design
- Reduced unit weight
- Easy maintenance/cleaning
- Condenser coil has mounting brackets with rubber inserts which secures coil to unit providing vibration dampening and corrosion protection
- Hydrophilic fin surfaces on evaporator coil repel water and direct condensation down the surface into drain pan

COOLING SYSTEM (continued)

Antimicrobial Condensate Drain Pan
- Composite pan, sloped to meet drainage requirements of ASHRAE 62.1
- Antimicrobial additive resists growth of mold and mildew on drain pan, which improves indoor air quality and reduces drain line blockage
- Side or bottom drain connections
- Reversible to allow connection at back of unit

5 Variable Speed Outdoor Coil Fan Motor
- Variable speed (ECM) fan motor for energy efficient performance and quiet operation
- Thermal overload protected
- Totally enclosed
- Permanently lubricated ball bearings
- Shaft up
- Wire basket mount

Outdoor Coil Fan
- PVC coated fan guard furnished

Required Selections

Cooling Capacity
- Specify nominal cooling capacity

Options/Accessories

Factory or Field Installed

Drain Pan Overflow Switch
- Monitors condensate level in drain pan
- Shuts down unit if drain becomes clogged

Field Installed

Condensate Drain Trap
- Constructed of PVC or copper

LOW GWP REFRIGERANT DETECTION SYSTEM (RDS)

- Complies with UL 60335-2-40 approved standard
- Required for all systems using R-454B refrigerant
- Factory installed on all units
- Consists of a refrigerant detection sensor(s) and a mitigation control
- Ensures safe operation for systems equipped with R-454B refrigerant
- Sensor(s) monitors indoor coil area for R-454B refrigerant
- If R-454B refrigerant is detected the refrigerant detection system will prevent compressor and heating operation until R-454B refrigerant is no longer detected
- Refrigeration detection system energizes blower if any R-454B refrigerant is detected to mitigate any concentrations of refrigerant from the unit and the system

CABINET

6 Construction
- Heavy-gauge steel panels
- Full perimeter heavy-gauge galvanized steel base rail
- Base rails have rigging holes
- Three sides of the base rail have forklift slots
- Raised edges around duct and power entry openings in the bottom of the unit for water protection

Airflow Choice
- Units are shipped in downflow (vertical) return air flow configuration

NOTE - Can be field converted to horizontal airflow configuration without any optional kits.

Duct Flanges
- Provided for horizontal duct attachment

Power/Gas Entry
- Electrical and gas lines can be routed through the unit base or through horizontal access knock-outs

Exterior Panels
- Constructed of heavy-gauge, galvanized steel
- Textured pre-paint with polyurethane finish
- Cyclic salt fog and UV exposure up to 1,680 hours per ASTM D5894

Insulation
- Fully insulated with non-hygroscopic fiberglass insulation (conditioned areas)
- Unit base is fully insulated
- Base insulation serves as an air seal to the roof curb, eliminating the need to add a seal during installation

7 Hinged Access Panels
- Tool-less access
- Economizer/Filter sections
- Compressor/Controls sections
- Panel seals and quarter-turn latching handles provide a tight air and water seal

NOTE - Optional Economizers, Power Exhaust, Outdoor Air Dampers and Barometric Relief Dampers include a filler panel for proper cabinet fit.

Required Selections

Airflow Configuration
- Specify horizontal or downflow

CABINET (continued)

Options/Accessories

Factory Installed

Corrosion Protection
- Completely flexible immersed coating
- Electrodeposited dry film process (AST ElectroFin E-Coat)
- ASTM B117 / DIN 53167 Salt Spray - 15,000+ hours
- ASTM G85 Annex A3 SWAAT Modified Salt Spray - 3,000 hours
- VA Master Construction Specification Division 23 for High Humidity Installations
- CID AA-52474A (GSA)
- Indoor Corrosion Protection:
  - Coated coil
  - Coated reheat coil
  - Painted blower housing
  - Painted base
- Outdoor Corrosion Protection:
  - Coated coil
  - Painted outdoor base

Factory or Field Installed

8 Combination Coil/Hail Guards
- Heavy gauge steel frame
- Painted to match cabinet
- Expanded metal mesh protects outdoor coil

Options/Accessories

Field Installed

Burglar Bars
- Heavy gauge galvanized frame
- Fully welded
- 3/4 in. bar meets ASTM specification
- Frame meets ASTM A446, A525, A526 and A527 specification
- Burglar bars designed to fit ductwork

BLOWER

9 A wide selection of supply air blower options are available to meet a variety of airflow requirements.

Variable-Speed ECM Direct Drive Motor
- 036, 048 and 060 models

DirectPlus™ Direct Drive ECM Blower System
- Optional on 036, 048 and 060 3 phase models, standard on 072 model.
- High-efficiency, variable-speed ECM (electronically commutated) motor
- Eliminates the need for a separate variable-frequency drive
- Advanced Blower Diagnostics: Lennox® CORE Unit Controller communicates via Modbus with DirectPlus™ blower to provide control commands, blower proving functionality, and detailed alarm codes
- MSAV control modulates the amount of supply blower airflow according to cooling demand, heating demand, ventilation demand or smoke alarm
- The amount of airflow for each stage can be set according to a parameter in the Lennox® CORE Unit Controller
- Unit is shipped from the factory with preset airflows
- Fully variable speed motor modulates to maximize system efficiency
- Combines the motor and electronics into one unit
- Aerodynamically optimized impeller with curved blades mounted directly onto the rotor

- Air inlet grill reduces indoor sound levels without affecting air performance

Required Selections

Blower Motor
- Specify Standard Static or High Static (3-5 ton models only)

ELECTRICAL

SmartWire™ System
- Keyed and color-coded wiring connectors prevent miswiring
- Wire coloring scheme is standardized across all models
- Each connection is intuitively labeled to make troubleshooting and servicing quick and easy

Electrical Plugs
- Positive connection electrical plugs are used to connect common accessories or maintenance parts for easy removal or installation

FEATURES AND BENEFITS

ELECTRICAL

Required Selections

Voltage Choice
- Specify when ordering base unit

Options/Accessories

Factory Installed

Circuit Breakers
- HACR type
- For overload and short circuit protection
- Factory wired and mounted in the power entry panel
- Current sensitive and temperature activated
- Manual reset

Phase/Voltage Detection
(3 Phase models only)
- Monitors power supply to ensure phase is correct at unit start-up
  - If phase is incorrect, the unit will not start and an alarm code is reported to the unit controller
- Protects unit from being started with incorrect phasing, which could lead to issues such as compressors running backwards
- Voltage detection monitors power supply voltage to ensure proper voltage
  - If voltage is not correct (over/under voltage conditions) the unit will not start and an alarm code is reported to the unit controller

Short-Circuit Current Rating (SCCR)
- Higher short circuit protection up to 100kA

NOTE - Disconnect Switch is furnished and factory installed with High SCCR option.

Factory or Field Installed

Disconnect Switch
- Accessible outside of unit
- Spring loaded weatherproof cover furnished

GFI Service Outlets (2)
- 115V ground fault circuit interrupter (GFCI) type options:
  - Factory installed, powered and wired
  - Factory installed, non-powered, field wired
  - Field installed, non-powered, field wired

INDOOR AIR QUALITY

10 **Air Filters**
- Disposable 2 inch MERV 4 filters furnished as standard

Options/Accessories

Factory or Field Installed

Healthy Climate® High Efficiency Air Filters
- Disposable MERV 8 or MERV 13 (Minimum Efficiency Reporting Value based on ASHRAE 52.2) efficiency 2-inch pleated filters

Field Installed

Healthy Climate® High Efficiency MERV 16 Air Filters
- Disposable MERV 16 (Minimum Efficiency Reporting Value based on ASHRAE 52.2) efficiency 2-inch pleated filters

Healthy Climate® UVC Germicidal Lamps

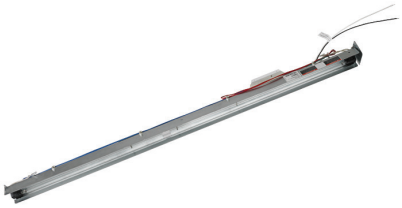

- Germicidal lamps emit ultra-violet (UV-C) energy, which has been proven to be effective in reducing microbes such as viruses, bacteria, yeasts, and molds
- UV-C energy greatly reduces the growth and proliferation of mold and other bioaerosols (bacteria and viruses) on illuminated surfaces (particularly coil and drain pan)
- Destroys the organism or controls its ability to reproduce
- Field installed in the blower/evaporator coil section
- Magnetic safety interlock terminates power when access panels are removed
- All necessary hardware for installation is included
- Lamps operate on 110/230V-1ph power supply

NOTE - Step-down transformer may be ordered separately for 460V and 575V units.

- Approved by ETL
- Needlepoint Bipolar Ionization (NPBI) Kit
- NPBI technology integrates with system controls for effective air treatment
- Ionization has been shown to effectively reduce harmful pathogens, pollutants, and odors
- Brush-type ionizer introduces a high concentration of both positive and negative ions into the airstream
- These bipolar ions are then dispersed into the occupied space through the duct system proactively reducing the airborne contaminants
- Ions travel within the building air stream and attach to particles, pathogens, and gas molecules, making them larger and easier to capture in the filtration system
- UL 2998 certified for zero ozone emission

Indoor Air Quality (CO_2) Sensors
- Monitors CO_2 levels
- Reports to the Lennox® CORE Unit Controller, which adjusts economizer dampers as needed

Replacement Filter Media Kit With Frame
- Replaces existing pleated filter media
- Includes washable metal mesh screen and metal frame with clip for holding replaceable non-pleated filter

LENNOX® CORE CONTROL SYSTEM

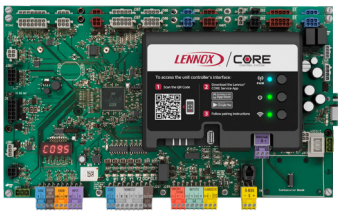

11 The Lennox® CORE Control system is designed to accelerate equipment install and service. Standard with all Enlight rooftop units, control system integrates key technologies that lower installation costs, drive system efficiency, and protect your investments.
The Lennox® CORE Unit Controller is a microprocessor-based controller that provides flexible control of all unit functions.

CORE Mobile Service App

- Guided Setup with progress indicators, detailed help, and exportable summaries to manage simple, trouble-free setup, reducing commissioning times
- Enhanced Test Functionality provides real-time sensor readings, trending, and reports that enable easy troubleshooting
- Ability to set and configure parameters of the CORE Control System to manage sequence of operation
- Economizer test function ensures economizer is operating correctly

Download on the App Store | ANDROID APP ON Google play

Additional Features:

- Built-In 7-Segment Display shows Unit Status and active alarms for easy troubleshooting
- Buttons for test and clearing delays
- SmartWire™ System with keyed and removable screw terminals ensure correct field wiring
- Built-in BACnet MS/TP and IP allow open integration to building management systems
- Two-port Ethernet Switch enables daisy chaining for BACnet IP and automatic firmware updates

NOTE - Unit Internet Connection required.

- Profile setup copies key settings between units with the same configuration to reduce setup time
- USB port allows a technician to download and transfer unit information to help verify service was performed
- USB software updates on the Lennox® CORE Unit Controller enhance functionality without the need to change components
- Unit Controller Software

Configurable Built-In Functions

- Discharge Air Cooling Control
- Up to three distinct Cooling Airflows in Thermostat Mode
- Programmable independent heating, ventilation and cooling blower speeds
- Discharge Air Heating Control
- Economizer Control Options (See Economizer / Exhaust Air / Outdoor Air sections)
- Exhaust Fan Control Modes for fresh air damper position
- Configurable Morning Warm-up
- Night Setback Mode
- Fresh Air Tempering for Improved Ventilation
- Demand Control Ventilation
- Low Ambient Controls for operation down to 0°F
- Humiditrol® Operation
- Enhanced Dehumidification (Latent Demand Control without hot has reheat)

Component Protection / Unit Safeguards:

- Compressor Time-Off Delay
- Adjustable Blower On/Off Delay
- Return Air Temperature Limit Control
- Safety Switch Input allows Controller to respond to a external safety switch trip
- Service Relay Output
- Thermostat Bounce Delay
- Smoke Alarm Mode has four choices (unit off, positive pressure, negative pressure, purge)
- “Strike Three” Protection
- Gas Valve Time Delay Between First and Second Stage
- Minimum Compressor Run Time

Control Methods / Interfaces:

- DDC and 24V Thermostat
- BACnet MS/TP and IP
- LONTalk (Factory and Field Option)
- Lennox S-BUS
- Zone Temperature Sensor Input
- Dehumidistat and Humidity Sensor Inputs
- Indoor Air Quality Inputs (2)
- Built-in Control Parameter Defaults
- Permanent Diagnostic Code Storage
- Field Adjustable Control Parameters (Over 200 settings)
- Multiple Configurable Digital Inputs
- LED Indicators
- PC Interface connects the Lennox® CORE Unit Controller to a PC with the Lennox Unit Controller Software

NOTE - Lennox® CORE Control System features vary with the type of rooftop unit in which the control is installed.

CONTROL SYSTEM

LENNOX® CORE CONTROL SYSTEM (continued)

Controls Options

Factory or Field Installed

Dirty Filter Switch
- Senses static pressure increase and issues alarm if necessary

Fresh Air Tempering
- Used in applications with high outside air requirements
- Controller energizes the first stage heat as needed to maintain a minimum supply air temperature for comfort, regardless of the thermostat demand
- When ordered as a factory option, sensor ships with the unit for field installation

Smoke Detector
- Photoelectric type
- Installed in supply air section, return air section or both sections
- Available with power board and single sensor (supply or return) or power board and two sensors (supply and return)
- Power board located in unit control compartment

Commercial Control Systems

Interoperability via BACnet® or LonTalk® Protocols
- Communication compatible with third-party automation systems that support the BACnet Application Specific Controller device profile, LonMark® Space Comfort Controller functional profile, or LonMark Discharge Air Controller functional profile

Field Installed

Thermostats and Room Sensors
- Control system and thermostat options, see page 13

OPTIONS / ACCESSORIES

ECONOMIZER

12
- Economizer operation is set and controlled by the Lennox® CORE Unit Controller
- Simple plug-in connections from economizer to unit controller for easy installation
- All Enlightrooftop units are equipped with factory installed CEC Title 24 approved sensors for outside, return and discharge air temperature monitoring

NOTE - Optional sensors may be used instead of unit sensors to determine whether outdoor air is suitable for free cooling. See Options/Accessories table.

Factory or Field Installed

High Performance Economizer
- Approved for California Title 24 building standards
- Low leakage dampers are Air Movement and Control Association International (AMCA) Class 1A Certified - Maximum 3 CFM per sq. ft. leakage at 1 in. w.g.
- ASHRAE 90.1 compliant
- Combination Outdoor Air Hood is furnished
- Factory installed Economizer can be ordered with three exhaust options:
  - Barometric Relief Dampers
  - Power Exhaust Fan

NOTE - See Power Exhaust Fan section for additional requirements.

  - No Exhaust
- Field installed Economizer includes Barometric Relief Dampers with Combination Hood
- Barometric Relief Dampers allow relief of excess air
- Dampers prevent blow back and outdoor air infiltration during off cycle
- Bird screen furnished

NOTE - Barometric Relief Dampers are required when Economizer is factory installed with factory installed Power Exhaust Fan option. See Power Exhaust Fan section and Options/Accessories table.

- Demand Control Ventilation (DCV) ready using optional CO_2 sensors
- Horizontal Barometric Dampers are required for horizontal Economizer applications and must be ordered separately
- Linked damper action
- High torque 24-volt fully-modulating spring return damper motor
- Return air and outdoor air dampers
- Plug-in connections to unit

ECONOMIZER (continued)

Factory or Field Installed (continued)

NOTE - High Performance Economizers are not approved for use with enthalpy controls in Title 24 applications.

NOTE - The Free Cooling setpoint for Title 24 applications must be set based on the Climate Zone where the system is installed. See Section 140.4 "Prescriptive Requirements for Space Conditioning Systems" of the California Energy Commission's 2022 Building Energy Efficiency Standards.

NOTE - Refer to Installation Instructions for complete setup information.

Differential Sensible Control

- Factory setting
- Uses outdoor air and return air sensors that are furnished with the unit
- The Lennox® CORE Unit Controller compares outdoor air and return air setpoints and activates the economizer when the outdoor air temperature is below the configured setpoint and cooler than return air

NOTE - Differential Sensible Control can be configured in the field to provide Offset Differential Sensible Control or Single Sensible Control.

In Offset Differential Sensible Control mode, the economizer is enabled if the temperature differential (offset) between outdoor air and return air reaches the configured setpoint

In Single Sensible Control mode, the economizer is enabled when outdoor air temperature falls below the configured setpoint

Global Control

- The unit controller communicates with a DDC system with one global sensor (enthalpy or sensible) to determine whether outside air is suitable for free cooling on all units connected to the control system

NOTE - Sensor must be field provided.

NOTE - Global control with enthalpy is not approved for Title 24 applications.

Single Enthalpy Temperature Control (Not for Title 24)

- Outdoor air enthalpy sensor enables Economizer if the outdoor enthalpy is less than the setpoint of the control

Differential Enthalpy Control
(Not for Title 24)

- Order two Single Enthalpy Controls:
  - One is field installed in the return air section
  - One in the outdoor air section
- Allows the economizer control to select between outdoor air or return air, whichever has lower enthalpy

Field Installed

Outdoor Air CFM Control

- Maintains constant outdoor air volume levels on the supply air fan and varying unit airflows
- References a velocity sensor located in the rooftop unit outdoor air section
- Lennox® CORE Unit Controller changes the economizer position to help minimize the effect of supply fan speed changes on outdoor air volume levels
- Setpoint for outdoor air volume is established by field testing

NOTE - Not available with Demand Control Ventilation (CO_2 Sensor) or Building Pressure Control.

Building Pressure Control

- Maintains constant building pressure level
- Using differential pressure information between the outdoor air and the building air, the Lennox® CORE Unit Controller changes the economizer position to help maintain a constant building pressure

NOTE - Not available with Demand Control Ventilation (CO_2 Sensor).

Horizontal Barometric Relief Dampers

- For use when unit is configured for horizontal applications with an economizer
- Allows relief of excess air
- Blade type dampers prevent blow back and outdoor air infiltration during off cycle
- Field installed in return air duct
- Outdoor air hood with filter bracket included
- Exhaust hood with bird screen furnished
- Requires Horizontal Economizer Conversion Kit

Horizontal Economizer Conversion Kit

- Insulated panel covers the bottom return air opening on the unit base to convert downflow economizer to horizontal air flow

OPTIONS / ACCESSORIES

EXHAUST

Factory or Field Installed

Power Exhaust Fan
- Installs internal to unit for downflow applications only with economizer option
- Provides exhaust air pressure relief
- Interlocked to run when supply air blower is operating
- Fan runs when outdoor air dampers are 50% open (adjustable)
- Motor is overload protected
- Fan is 16 in. diameter
- Four blades
- One 1/3 HP motor

NOTE - If Power Exhaust is field installed with a factory installed Economizer, the Economizer must be ordered with No Exhaust option. Barometric Relief Dampers must also be ordered separately for field installation.

NOTE - If Power Exhaust is factory installed with a factory installed Economizer, Barometric Relief Dampers must also be ordered separately for field installation.

OUTDOOR AIR

Factory or Field Installed

Motorized Outdoor Air Dampers
- Linked mechanical dampers
- Fully modulating spring return damper motor with plug-in connection
- 0 to 25% (fixed) outdoor air adjustable
- Installs in unit
- Outdoor air hood with bird screen included

NOTE - Outdoor Air Hood is shipped separately in the unit with factory installed dampers for field installation.

Field Installed

Manual Outdoor Air Damper
- Adjustable slide damper
- Installed in unit
- Outdoor air hood with bird screen included

ROOF CURBS

Field Installed
- Nailer strip furnished (downflow only)
- Mates to unit
- US National Roofing Contractors Approved
- Shipped knocked down

Hybrid Roof Curbs, Downflow
- Interlocking tabs fasten corners together
- No tools required for assembly
- Can also be fastened together with furnished hardware
- Available in 8, 14, 18, and 24 inch heights

Adjustable Pitch Curb
- Fully adjustable pitch curbs (3/4 in. per foot in any direction) provide a level platform for rooftop units allowing flexible installations on roofs with uneven or sloped angles
- Interlocking tabs fasten corners together
- No tools required for assembly
- Hardware is furnished to connect upper curb with lower curb
- Available in 14 inch height

Adaptor Curbs (not shown)
- Curbs are regionally sourced
- Dimensions vary based upon the source

NOTE - Contact your local sales representative for a detailed cut sheet with applicable dimensions.

CEILING DIFFUSERS

Field Installed

Ceiling Diffusers
(Flush or Step-Down)
- White powder coat finish on diffuser face and grilles
- Insulated UL listed duct liner
- Diffuser box has collars for duct connection
- Step-down diffusers have double deflection blades
- Flush diffusers have fixed blades
- Provisions for suspending
- Internally sealed to prevent recirculation
- Removable return air grille
- Adapts to T-bar ceiling grids or plaster ceilings

Transitions (Supply and Return)
- Used with diffusers
- Installs in roof curb
- Galvanized steel construction
- Flanges furnished for duct connection to diffusers
- Fully insulated

13 OVERVIEW

- Factory installed option designed to control humidity
- Provides dehumidification on demand using ASHRAE 90.1 recommended method for comfort conditioning humidity control
- Unit comes equipped with one row reheat coil, solenoid valve and humidity controller

NOTE - A dehumidification demand from a relative humidity sensor, dehumidistat, a DDC controller or building automation system is required to control humidity.

Controls are not furnished and must be ordered separately.

BENEFITS

- Improves indoor air quality
- Helps prevents damage due to high humidity levels
- Improves comfort levels by reducing space humidity levels

OPERATION

No Dehumidification Demand

- The unit will operate conventionally whenever there is a demand for cooling or heating and no dehumidification demand
- Free cooling is only permitted when there is no demand for dehumidification

Dehumidification Demand Only

- Reheat operation will initiate on a dehumidification demand and does not require a cooling demand
- Unit will operate in the dehumidification mode until the relative humidity of the conditioned space is below the setpoint
- Reheat coil is sized to provide 68°F to 75°F supply air during reheat operation
- This reduces sensible cooling capacity and extends compressor run time to control humidity when the cooling load is low
- A solenoid valve diverts hot gas from the compressor to the reheat coil
- Cooled and dehumidified air from the evaporator is reheated as it passes through the reheat coil
- De-superheated and partially condensed refrigerant continues to the outdoor condenser coil where condensing is completed
- Unit will continue to operate in this mode until the dehumidification demand is satisfied

NOTE - See Sequence of Operation for additional information.

Dehumidification and Cooling Demand (Thermostat/ Room Sensor Application)

- If both a dehumidification and a 1st stage cooling demand occur, the system will operate in the full cooling mode at first stage indoor air flow.
- If a 2nd stages cooling demand occurs along with a dehumidification demand, the system operates in full cooling mode at full cooling airflow until the 2nd stage cooling demand is satisfied
- Then the system will revert to the dehumidification mode if a dehumidification mode demand is present

TYPICAL DEHUMIDIFICATION SCHEMATIC

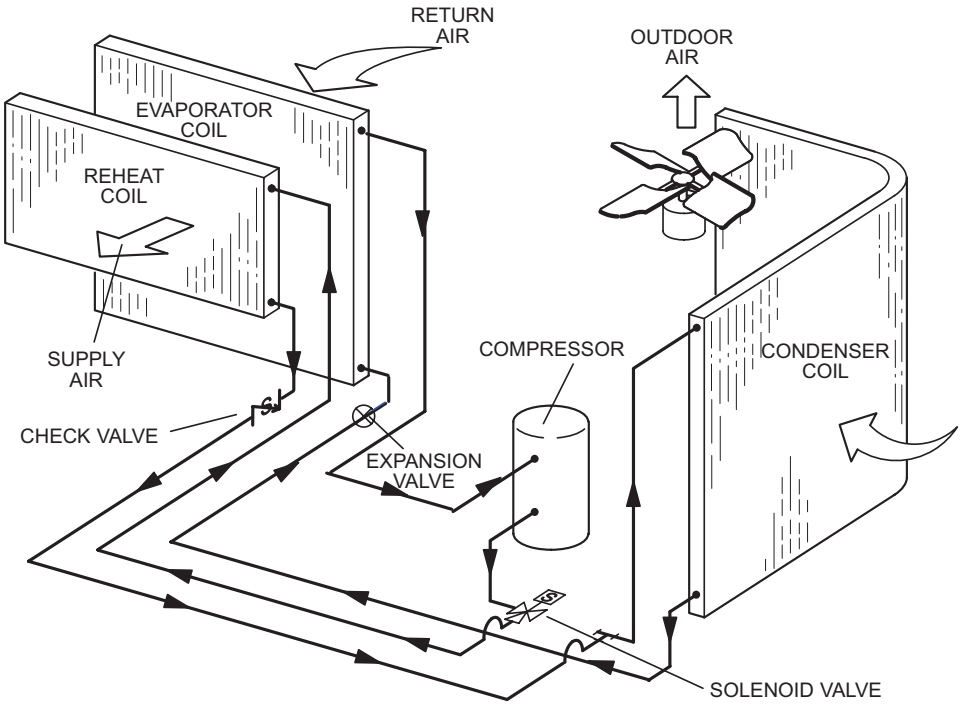

OPTIONAL CONVENTIONAL TEMPERATURE CONTROL SYSTEMS

CS8500 Commercial 7-Day Programmable Thermostat

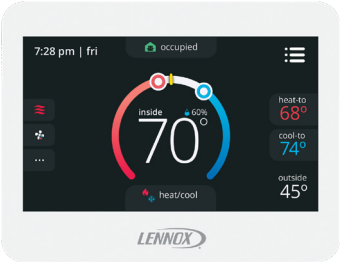

- Fully Communicating Sensor
- Full Color Touchscreen Interface
- Variable Speed System Control (On Compatible Units)
- Up To 4 Heat / 4 Cool
- Built-In Sensors For Temperature, Humidity And Optional CO_2
- Remote Sensor Options For Occupancy, Temperature
- BACnet Capable Options
- 5-2 or 7-Day Scheduling
- Smooth Setback Recovery
- Heat/Cool Auto-Changeover
- Four-Wire Installation
- FDD, ASHRAE, IECC Compliant

CS7500 Commercial 7-Day Programmable Thermostat

- Premium Universal Thermostat
- Full Color Touchscreen Interface
- Up To 4 Heat / 3 Cool
- Built-In Sensors For Temperature and Humidity
- Remote Sensors Options For Temperature, Discharge Air, Outdoor Air
- 5-2 or 7-Day Scheduling
- Smooth Setback Recovery
- Heat/Cool Auto-Changeover
- FDD, ASHRAE, IECC Compliant

CS3000 Commercial 5-2 Day Programmable Thermostat

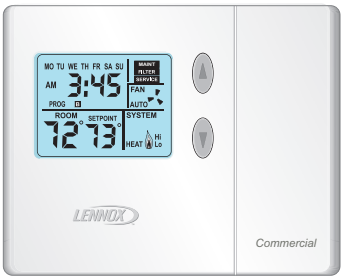

- Conventional Multi-Stage Thermostat
- Intuitive Display
- Push-Button Operation
- Up To 2 Heat / 2 Cool
- Built-In Temperature Sensor
- Remote Temperature Sensing
- Up to 5-2 Day Scheduling
- Smooth Setback Recovery
- Heat/Cool Auto-changeover

Wired Temperature/Humidity Room Sensor (Non-Communicating)

- Terminal blocks for wiring connections
- Five-wire sensor connection
- Off-white plastic enclosure
- Non-adjustable
- Relative humidity range: 0 -100%
- +/- 3% Accuracy

OPTIONAL CONVENTIONAL TEMPERATURE CONTROL SYSTEMS

Description		Order Number
CS8500 Commercial 7 Day Programmable Thermostat		
CS8500 7-Day Thermostat	No CO_2 Sensing	**24K55**
	With CO_2 Sensing	**24K53**
Sensors/Accessories	[1] Remote non-adjustable wall-mount 10k	**47W37**
	[1] Remote non-adjustable wall-mount 11k	**94L61**
Sysbus Network Cable (Yellow) for CS8500 and LCS-5030 Wired Room Sensor		
Twisted pair 100% shielded communication cable, Red and Black 22 AWG, yellow jacket, rated at 75°C, 300V, Plenum rated Insulation - Low smoke PVC, NEC, CMP	500 ft. box	**27M19**
	1000 ft. box	**94L63**
	2500 ft. roll	**68M25**
CS7500 Commercial 7-Day Programmable Thermostat		
CS7500 7-Day Thermostat		**24K41**
Sensors/Accessories	[2] Remote non-adjustable wall-mount 20k	**47W36**
	[2] Remote non-adjustable wall-mount 10k	**47W37**
	Remote non-adjustable discharge air (duct mount)	**19L22**
	Outdoor temperature sensor	**X2658**
CS3000 Commercial 5-2 Day Programmable Thermostat		
CS3000 5-2 Day Thermostat		**11Y05**
Sensors/Accessories	Remote non-adjustable wall mount 10k averaging	**47W37**
	Thermostat wall mounting plate	**X2659**
Universal Thermostat Guard with Lock (clear)		
	Inside Dimensions (H x W x D) 5-7/8 x 8-3/8 x 3 in.	**39P21**
Temperature/Humidity Room Sensor		
A335MT13AE1 Wired Temperature/Humidity Room Sensor (Non-Communicating)		**21W06**

[1] Up to nine of the same type remote temperature sensors can be connected in parallel.

[2] Remote wall-mount sensors can be applied in any of the following combinations:
One Sensor - (1) 47W36, Two Sensors - (2) 47W37, Three Sensors - (2) 47W36 and (1) 47W37
Four Sensors - (4) 47W36, Five Sensors - (3) 47W36 and (2) 47W37

SEQUENCE OF OPERATION

Objective: Outline the unit functions as a result of room thermostat or zone sensor demands.

Given: When economizer is present, it will function as initial part of the unit cooling system. When not present, unit will function as if outdoor ambient is high and sensed as not suitable.

NOTE: When the compressor is operating at first stage, the condenser fan is operating at low speed. The condenser fan switches to high speed when the compressor switches to second stage to match operation.

Modulating Outdoor Air Damper:

Damper minimum positions #1 and 2 are adjusted during unit setup to provide minimum fresh air requirements at the indicated supply fan speeds per ASHRAE 62.1.

- Supply fan is off and the outdoor air damper is closed
- Supply fan is on low speed and the outdoor air damper is at minimum position 1
- Supply fan is on high speed and the outdoor air damper is at minimum position 2

COOLING

[1] Unit Features an Economizer and Outdoor Air is Suitable

Thermostat or Zone Sensor Mode (Up to 3 stages Y1, Y2, Y3)

Y1 Demand:

Compressor is off, supply fan is on low speed, economizer modulates (minimum to maximum open position) to maintain 55°F supply air temperature (default unit controller setting)

After 5 minutes (default unit controller setting), supply fan switches to high speed. Economizer continues modulating with supply fan on high speed to maintain 55°F supply air temperature

Y2 Demand:

Compressor is off, supply fan is on high speed, and economizer modulates to maintain 55°F supply air temperature

Economizer opens to maximum. If economizer stays at maximum open for 3 minutes (default unit controller setting) compressor is energized and operates at first stage while supply fan stays on high speed

[1] Outdoor air suitability is determined by the energy state of outdoor ambient (enthalpy or sensible) and its ability to achieve the desired free cooling effects. Outdoor air suitability can also be determined by a third party controller and provided to the RTU via a network connection.

Y3 Demand:

Economizer is at maximum open and compressor operates at first stage. If economizer stays at maximum open for 3 minutes (default unit controller setting) compressor switches to second stage operation while supply fan stays on high speed

Unit <u>Does Not</u> Feature an Economizer (or Outdoor Air Is Not Suitable)

Thermostat or Zone Sensor (Up to 2 stages Y1, Y2)

Y1 Demand:

Compressor operates at first stage and supply fan operates at low speed

Y2 Demand:

Compressor operates at second stage and supply fan operates at high speed

(Continued on Next Page)

SEQUENCE OF OPERATION

DEHUMIDIFICATION

(Economizer free cooling is locked out)

Unit Features the Humiditrol® Dehumidification option.

Dehumidification Demand (No demand for Y1, Y2)

Compressor operates at second stage, supply fan operates at low speed, and the reheat valve is energized

Y1 Demand:

Compressor operates at second stage, supply fan operates at low speed and the reheat valve is de-energized

Y2 Demand:

Compressor operates at second stage, supply fan operates at high speed, and the reheat valve is de-energized

Heating Mode: Thermostat or Zone Sensor (Up to 2 stages W1, W2)

W1 Demand:

Gas valve is open (stage 1 on units with 2 stage gas valve) and the supply fan operates at high speed

W2 Demand:

Gas valve is open (stage 2 on units with 2 stage gas valve) and the supply fan operates at high speed

OPTIONS / ACCESSORIES

Item		Order Number	Size 036	048	060	072
COOLING SYSTEM						
Condensate Drain Trap	PVC	**22H54**	X	X	X	X
	Copper	**76W27**	X	X	X	X
Drain Pan Overflow Switch		**21Z07**	OX	OX	OX	OX
HEATING SYSTEM						
Bottom Gas Piping Kit		**19W50**	X	X	X	X
Combustion Air Intake Extensions		**19W51**	X	X	X	X
Gas Heat (Low NOx) Input	Standard Two-Stage - 53/65 kBtuh input	Factory	O	O	O	O
	Medium Two-Stage - 81/108 kBtuh input	Factory	O	O	O	O
	High Two-Stage - 113/150 kBtuh input	Factory		O	O	O
Low Temperature Vestibule Heater	208/230V-1 or 3ph	**21Z17**	X	X	X	X
	460V-3ph	**21Z18**	X	X	X	X
	575V-3ph	**21Z19**	X	X	X	X
LPG/Propane Conversion Kits	For two-stage standard models	**21Z24**	X	X	X	X
	For two-stage medium and high models	**21Z23**	X	X	X	X
Stainless Steel Heat Exchanger		Factory	O	O	O	O
Vertical Vent Extension		**31W62**	X	X	X	X
BLOWER - SUPPLY AIR						
Motors - Standard Static (All voltages)	Direct Drive ECM Blower - 0.50 HP	Factory	O			
	1 HP	Factory		O	O	
Motors - High Static (3 phase only)	DirectPlus™ Direct Drive ECM Blower System - 1.5 HP	Factory	O	O	O	O
CABINET						
Burglar Bars		**Y1037**	X	X	X	X
Combination Coil/Hail Guards		**13T03**	OX	OX	OX	OX
Corrosion Protection		Factory	O	O	O	O
CONTROLS						
Blower Proving Switch		**21Z10**	OX	OX	OX	OX
Commercial Controls	LonTalk® Module	**54W27**	OX	OX	OX	OX
	Novar® LSE	Factory	O	O	O	O
Dirty Filter Switch		**53W66**	OX	OX	OX	OX
Fresh Air Tempering		**21Z08**	OX	OX	OX	OX
Smoke Detector - Supply or Return (Power board and one sensor)		**21Z11**	OX	OX	OX	OX
Smoke Detector - Supply and Return (Power board and two sensors)		**21Z12**	OX	OX	OX	OX

NOTE - Order Numbers shown are for ordering field installed accessories.
OX - Configure To Order (Factory Installed) or Field Installed
O = Configure To Order (Factory Installed)
X = Field Installed

OPTIONS / ACCESSORIES

Item		Order Number	Size 036	048	060	072
ELECTRICAL						
Voltage	208/230V - 1 phase	Factory	O	O	O	
60 Hz	208/230V - 3 phase	Factory	O	O	O	O
	460V - 3 phase	Factory	O	O	O	O
	575V - 3 phase	Factory	O	O	O	O
HACR Circuit Breakers		Factory	O	O	O	O
[1] Short-Circuit Current Rating (SCCR) of 100kA (includes Phase/Voltage Detection)		Factory	O	O	O	O
Disconnect Switch	80 amp	**22A25**	OX	OX	OX	OX
GFI Service Outlets	15 amp non-powered, field-wired (208/230V, 460V only)	**74M70**	OX	OX	OX	OX
	15 amp factory-wired and powered (208/230V, 460V only)	Factory	O	O	O	O
	[2] 20 amp non-powered, field-wired (208/230V, 460V, 575V)	**67E01**	X	X	X	X
	[2] 20 amp non-powered, field-wired (575V)	Factory	O	O	O	O
Weatherproof Cover for GFI		**10C89**	X	X	X	X
Phase/Voltage Detection - 3 Phase Models Only		Factory	O	O	O	O
ECONOMIZER						
High Performance Economizer With Outdoor Air Hood (Sensible Control) (Approved for California Title 24 Building Standards / AMCA Class 1A Certified)						
High Performance Economizer - Includes Barometric Relief Dampers and Combination Hood		**20H48**	OX	OX	OX	OX
High Performance Economizer - No Exhaust Option		Factory	O	O	O	O
Economizer Accessories						
Horizontal Economizer Conversion Kit		**17W45**	X	X	X	X
Economizer Controls						
Single Enthalpy (Not for Title 24)		**21Z09**	OX	OX	OX	OX
Differential Enthalpy (Not for Title 24)	Order 2	**21Z09**	OX	OX	OX	OX
Sensible Control	Sensor is Furnished	Factory	O	O	O	O
Outdoor Air CFM Control		**13J76**	X	X	X	X
Global Control	Sensor Field Provided	Factory	O	O	O	O
Building Pressure Control		**13J77**	X	X	X	X
POWER EXHAUST FAN						
Standard Static	208/230V-1 or 3ph	**21Z13**	OX	OX	OX	OX
*NOTE - Factory or Field installed Power Exhaust Fan requires "Barometric Relief Dampers for Power Exhaust Kit (**21Z21**)" for field installation.*	460V-3ph	**21Z14**	OX	OX	OX	OX
	575V-3ph	**21Z15**	OX	OX	OX	OX
BAROMETRIC RELIEF						
[3] Barometric Relief Dampers for Power Exhaust Kit		**21Z21**	X	X	X	X
[4] Horizontal Barometric Relief Dampers With Outdoor Air and Exhaust Hood		**19F01**	X	X	X	X
OUTDOOR AIR						
Outdoor Air Dampers With Outdoor Air Hood						
Motorized		**15D17**	OX	OX	OX	OX
Manual		**15D18**	X	X	X	X
HUMIDITROL® CONDENSER REHEAT OPTION						
Humiditrol® Dehumidification Option		Factory	O	O	O	O
Humidity Sensor Kit, Remote Mounted		**17M50**	X	X	X	X

[1] Disconnect Switch is furnished and factory installed with High SCCR option.
[2] Canada requires a minimum 20 amp circuit. Select 20 amp, non-powered, field wired GFI.
[3] Required when Economizer is factory installed with factory installed Power Exhaust Fan option.
[4] Required when Economizer is configured for horizontal airflow.

NOTE - Order Numbers shown are for ordering field installed accessories.
OX - Configure To Order (Factory Installed) or Field Installed
O = Configure To Order (Factory Installed)
X = Field Installed

OPTIONS / ACCESSORIES

Item		Order Number	Size 036	048	060	072
INDOOR AIR QUALITY						
Air Filters						
Healthy Climate® High Efficiency Air Filters 20 x 20 x 2 in. (Order 4 per unit)	MERV 8	**54W21**	OX	OX	OX	OX
	MERV 13	**52W39**	OX	OX	OX	OX
	MERV 16	**21U40**	X	X	X	X
Replaceable Media Filter With Metal Mesh Frame (includes non-pleated filter media) (order 4 per unit)	20 x 20 x 2 in.	**44N60**	X	X	X	X
Indoor Air Quality (CO_2) Sensors						
Sensor - Wall-mount, off-white plastic cover with LCD display		**77N39**	X	X	X	X
Sensor - Wall-mount, off-white plastic cover, no display		**23V86**	X	X	X	X
Sensor - Black plastic case, LCD display, rated for plenum mounting		**87N52**	X	X	X	X
Sensor - Black plastic case, no display, rated for plenum mounting		**23V87**	X	X	X	X
CO_2 Sensor Duct Mounting Kit - for downflow applications		**23Y47**	X	X	X	X
Aspiration Box - for duct mounting non-plenum rated CO_2 sensors (**77N39**)		**90N43**	X	X	X	X
Needlepoint Bipolar Ionization (NPBI)						
Needlepoint Bipolar Ionization (NPBI) Kit		**22U14**	X	X	X	X
UVC Germicidal Lamps						
[5] Healthy Climate® UVC Light Kit (110/230V-1ph)		**21A92**	X	X	X	X
Step-Down Transformers	460V primary, 230V secondary	**10H20**	X	X	X	X
	575V primary, 230V secondary	**10H21**	X	X	X	X
ROOF CURBS						
Hybrid Roof Curbs, Downflow						
8 in. height		**11F50**	X	X	X	X
14 in. height		**11F51**	X	X	X	X
18 in. height		**11F52**	X	X	X	X
24 in. height		**11F53**	X	X	X	X
Adjustable Pitched Curb						
14 in. height		**43W27**	X	X	X	X
Transition Curb						
Matches Enlight 036-072 Units to existing L Series® Curbs		**31B05**	X	X	X	X
CEILING DIFFUSERS						
Step-Down - Order one	RTD9-65S	**13K60**	X	X	X	
	RTD11-95S	**13K61**				X
Flush - Order one	FD9-65S	**13K55**	X	X	X	
	FD11-95S	**13K56**				X
Transitions (Supply and Return) - Order one	T1TRAN10AN1	**17W53**	X	X	X	
	T1TRAN20N-1	**17W54**				X

[5] Lamps operate on 110-230V single-phase power supply. Step-down transformer may be ordered separately for 460V and 575V units. Alternately, 110V power supply may be used to directly power the UVC ballast(s).

NOTE - Order Numbers shown are for ordering field installed accessories.
OX - Configure To Order (Factory Installed) or Field Installed
O = Configure To Order (Factory Installed)
X = Field Installed

SPECIFICATIONS

Model		LGT036H5E	LGT048H5E	LGT060H5E	LGT072H5E
Nominal Tonnage		3	4	5	6
Efficiency Type		High	High	High	High
Blower Type		MSAV® ECM Direct Drive	MSAV® ECM Direct Drive	MSAV® ECM Direct Drive	MSAV® ECM Direct Drive
Cooling Performance	Gross Cooling Capacity (Btuh)	36,600	50,100	61,600	72,000
	[1] Net Cooling Capacity (Btuh)	36,000	49,000	60,000	69,000
	[1] AHRI Rated Air Flow (cfm-high/low)	1200/800	1600/1200	1800/1350	2000/1500
	[1] SEER2 (Btuh/Watt)	17.5	17.3	16.4	- - -
	[1] EER2 (Btuh/Watt)	13.5	13.0	12.5	- - -
	[1] IEER (Btuh/Watt)	- - -	- - -	- - -	17.3
	[1] EER (Btuh/Watt)	- - -	- - -	- - -	12.2
	Total Unit Power (kW)	2.7	3.8	4.6	5.6
Sound Rating Number	dBA	75	75	82	82
Refrigerant Charge	Refrigerant Type	R-454B	R-454B	R-454B	R-454B
	Without Reheat Option	4 lbs. 14 oz.	5 lbs. 2 oz.	4 lbs. 14 oz.	4 lbs. 13 oz.
	With Reheat Option	5 lbs. 6 oz.	5 lbs. 4 oz.	4 lbs. 13 oz.	4 lbs. 8 oz.
Gas Heat Available		See page 21			
Compressor Type (Number)		Two-Stage Scroll (1)			
Outdoor Coil	Net face area - ft.^{2}	17.80	17.80	17.80	17.80
	Rows	1	1	1	1
	Fins - in.	20	20	20	20
Outdoor Coil Fan	Motor HP (number and type)	1/3 (1 ECM)	1/3 (1 ECM)	1/3 (1 ECM)	1/3 (1 ECM)
	Rpm	550-830	765-1010	830-1030	830-1030
	Watts	65-175	130-300	170-350	170-350
	Diameter (Number) - in.	(1) 24	(1) 24	(1) 24	(1) 24
	Blades	3	3	3	3
	Total air volume - cfm	2400 - 3795	2700 - 4100	3200 - 4700	3200 - 4700
Indoor Coil	Net face area - ft.^{2}	8.65	8.65	8.65	8.65
	Rows	1	1	1	1
	Fins - in.	20	20	20	20
	Condensate drain size (NPT) - in.	(1) 1	(1) 1	(1) 1	(1) 1
	Expansion device type	Balanced Port Thermostatic Expansion Valve,removable power element			
Indoor Blower	Standard Static (All Voltages) — Blower type	Direct Drive ECM			
	Blade type	Forward Curved			
	Nominal motor HP	0.50	1	1	- - -
	Wheel (Number) diameter x width - in.	(1) 10 X 10	(1) 11 X 10	(1) 11 X 10	- - -
	High Static (3ph Only) — Blower type	DirectPlus™ Direct Drive ECM			
	Blade type	Backward Curved			
	Nominal motor HP	1.5	1.5	1.5	1.5
	Wheel (Number) diameter x width - in.	(1) 14 X 5	(1) 14 X 5	(1) 14 X 5	(1) 14 X 5
Filters	Type	MERV 4, Disposable			
	Number and size - in.	(4) 20 x 20 x 2			
Line voltage data (Volts-Phase-Hz)		208/230-1-60 208/230-3-60 460-3-60 575-3-60			208/230-3-60 460-3-60 575-3-60

NOTE - Net capacity includes evaporator blower motor heat deduction. Gross capacity does not include evaporator blower motor heat deduction.

[1] AHRI Certified to AHRI Standard 210/240 (3-5 ton) or 340/360 (6 ton): 95°F outdoor air temperature and 80°F db/67°F wb entering evaporator air; minimum external duct static pressure.

SPECIFICATIONS — LOW NOX GAS HEAT

Model		036, 048, 060	036, 048, 060, 072	036, 048, 060, 072	048, 060, 072
Heat Input Type		**Standard (2 Stage)**		**Medium (2 Stage)**	**High (2 Stage)**
Input Btuh	1st Stage	53,000		81,000	113,000
	2nd Stage	65,000		108,000	150,000
Output Btuh	1st Stage	43,000		66,000	92,000
	2nd Stage	52,000		87,000	121,000
Temperature Rise Range - °F	1st stage	5-35		25 - 55	30 - 60
	2nd Stage	35-65 (0.5 and 1 HP)	15-45 (1.5 HP)	30 - 70	45 - 75
Minimum air volume - cfm		960	1075	1150	1500
[1] AFUE (Single Phase)		81%		81%	81%
[2] Thermal Efficiency (Three Phase)		81%		81%	81%
Gas Supply Connections		1/2 in. NPT			
Recommended Gas Supply Pressure - Nat. / LPG		7 in. w.g. / 11 in. w.g.			
Gas Supply Pressure Range	Min./Max. (Natural)	4.5 - 10.5 in. w.g.			
	Min./Max. (LPG)	10.8 - 13.5 in. w.g.			

[1] Annual Fuel Utilization Efficiency based on U.S. DOE test procedures and FTC labeling regulations.
[2] Thermal Efficiency at full input.

HIGH ALTITUDE DERATE

NOTE - Units may be installed at altitudes up to 2000 feet above sea level without any modifications.
At altitudes above 2000 feet units must be derated to match gas manifold pressures shown in table below.
At altitudes above 4500 feet unit must be derated 2% for each 1000 feet above sea level.

NOTE - This is the only permissible derate for these units.

Refer to the Installation Instructions for more detailed information.

Heat Input Type	Altitude Feet	Gas Manifold Pressure in. w.g.		Input Rate (Btuh)
		Natural Gas	LPG/ Propane	
Standard (2 stage)	2001 - 4500	1.7 / 3.0	5.9 / 9.0	51,000 / 62,000
Medium (2 stage)	2001 - 4500	1.7 / 3.0	5.9 / 9.0	78,000 /104,000
High (2 stage)	2001 - 4500	1.7 / 3.0	5.9 / 9.0	108,000 / 144,000

RATINGS

NOTE - For Temperatures and Capacities not shown in tables, see bulletin - Cooling Unit Rating Table Correction Factor Data in Miscellaneous Product Data section.

3 TON - LGT036H5 (PART LOAD)

Entering Wet Bulb Temperature	Total Air Volume	Outdoor Air Temperature Entering Outdoor Coil																			
		65°F					75°F					85°F					95°F				
		Total Cool Cap.	Comp. Motor Input	Sensible To Total Ratio (S/T) Dry Bulb			Total Cool Cap.	Comp. Motor Input	Sensible To Total Ratio (S/T) Dry Bulb			Total Cool Cap.	Comp. Motor Input	Sensible To Total Ratio (S/T) Dry Bulb			Total Cool Cap.	Comp. Motor Input	Sensible To Total Ratio (S/T) Dry Bulb		
	cfm	kBtuh	kW	75°F	80°F	85°F	kBtuh	kW	75°F	80°F	85°F	kBtuh	kW	75°F	80°F	85°F	kBtuh	kW	75°F	80°F	85°F
63°F	640	25.8	1.11	0.63	0.75	0.91	24.8	1.28	0.64	0.77	0.93	23.6	1.47	0.65	0.79	0.97	22.4	1.68	0.66	0.82	1
	800	27.4	1.1	0.67	0.84	1	26.3	1.27	0.68	0.87	1	25.1	1.46	0.7	0.9	1	23.8	1.66	0.72	0.93	1
	960	28.6	1.09	0.72	0.94	1	27.5	1.26	0.74	0.97	1	26.3	1.45	0.77	1	1	25	1.65	0.8	1	1
67°F	640	27.6	1.09	0.5	0.6	0.71	26.5	1.27	0.5	0.61	0.73	25.4	1.45	0.51	0.62	0.75	24.1	1.66	0.52	0.63	0.77
	800	29.2	1.08	0.52	0.64	0.79	28	1.25	0.53	0.66	0.82	26.8	1.44	0.54	0.67	0.85	25.4	1.65	0.55	0.69	0.88
	960	30.4	1.07	0.55	0.69	0.89	29.1	1.25	0.56	0.71	0.92	27.8	1.43	0.57	0.73	0.95	26.3	1.64	0.58	0.76	0.99
71°F	640	29.5	1.08	0.39	0.48	0.58	28.4	1.25	0.39	0.49	0.58	27.2	1.44	0.39	0.49	0.59	25.8	1.64	0.39	0.5	0.61
	800	31.3	1.07	0.4	0.51	0.62	30	1.24	0.4	0.51	0.63	28.7	1.43	0.4	0.52	0.64	27.2	1.63	0.4	0.53	0.66
	960	32.4	1.06	0.41	0.54	0.67	31.1	1.23	0.41	0.54	0.68	29.7	1.42	0.41	0.56	0.7	28.2	1.63	0.42	0.57	0.73

3 TON - LGT036H5 (FULL LOAD)

Entering Wet Bulb Temperature	Total Air Volume	Outdoor Air Temperature Entering Outdoor Coil																			
		85°F					95°F					105°F					115°F				
		Total Cool Cap.	Comp. Motor Input	Sensible To Total Ratio (S/T) Dry Bulb			Total Cool Cap.	Comp. Motor Input	Sensible To Total Ratio (S/T) Dry Bulb			Total Cool Cap.	Comp. Motor Input	Sensible To Total Ratio (S/T) Dry Bulb			Total Cool Cap.	Comp. Motor Input	Sensible To Total Ratio (S/T) Dry Bulb		
	cfm	kBtuh	kW	75°F	80°F	85°F	kBtuh	kW	75°F	80°F	85°F	kBtuh	kW	75°F	80°F	85°F	kBtuh	kW	75°F	80°F	85°F
63°F	960	34.6	2.1	0.68	0.82	0.98	33	2.37	0.69	0.84	1	31.3	2.66	0.7	0.87	1	29.4	3.02	0.72	0.91	1
	1200	36.6	2.11	0.73	0.92	1	34.8	2.38	0.75	0.95	1	33.1	2.67	0.77	0.99	1	31.2	3.02	0.8	1	1
	1440	38.3	2.13	0.8	1	1	36.7	2.39	0.82	1	1	35	2.69	0.85	1	1	33.2	3.04	0.9	1	1
67°F	960	37	2.12	0.53	0.65	0.78	35.3	2.38	0.54	0.66	0.8	33.4	2.68	0.55	0.68	0.83	31.5	3.02	0.56	0.7	0.86
	1200	38.9	2.13	0.56	0.7	0.87	37	2.39	0.57	0.72	0.91	35	2.69	0.58	0.74	0.94	32.9	3.04	0.6	0.77	0.98
	1440	40.2	2.14	0.6	0.77	0.97	38.4	2.41	0.61	0.79	1	36.2	2.7	0.62	0.83	1	34	3.04	0.64	0.86	1
71°F	960	39.6	2.14	0.41	0.52	0.62	37.8	2.4	0.41	0.52	0.64	35.8	2.7	0.41	0.53	0.65	33.7	3.04	0.42	0.54	0.67
	1200	41.6	2.16	0.42	0.55	0.68	39.6	2.42	0.42	0.56	0.7	37.5	2.71	0.43	0.57	0.72	35.2	3.06	0.43	0.59	0.74
	1440	43	2.17	0.43	0.58	0.74	40.9	2.43	0.44	0.6	0.76	38.6	2.73	0.44	0.61	0.8	36.2	3.07	0.45	0.63	0.84

4 TON - LGT048H5 (PART LOAD)

Entering Wet Bulb Temperature	Total Air Volume	Outdoor Air Temperature Entering Outdoor Coil																			
		65°F					75°F					85°F					95°F				
		Total Cool Cap.	Comp. Motor Input	Sensible To Total Ratio (S/T) Dry Bulb			Total Cool Cap.	Comp. Motor Input	Sensible To Total Ratio (S/T) Dry Bulb			Total Cool Cap.	Comp. Motor Input	Sensible To Total Ratio (S/T) Dry Bulb			Total Cool Cap.	Comp. Motor Input	Sensible To Total Ratio (S/T) Dry Bulb		
	cfm	kBtuh	kW	75°F	80°F	85°F	kBtuh	kW	75°F	80°F	85°F	kBtuh	kW	75°F	80°F	85°F	kBtuh	kW	75°F	80°F	85°F
63°F	850	35.6	1.41	0.77	0.88	0.96	34.1	1.66	0.78	0.89	0.97	32.6	1.95	0.79	0.9	0.99	30.9	2.27	0.81	0.92	1
	1065	37.8	1.39	0.82	0.93	1	36.2	1.64	0.83	0.94	1	34.6	1.93	0.85	0.95	1	32.7	2.26	0.86	0.97	1
	1280	39.5	1.38	0.86	0.97	1	37.8	1.63	0.87	0.99	1	36.2	1.92	0.89	1	1	34.5	2.24	0.9	1	1
67°F	850	38	1.39	0.61	0.74	0.85	36.5	1.64	0.62	0.75	0.86	34.9	1.93	0.62	0.76	0.88	33.2	2.25	0.63	0.77	0.89
	1065	40.2	1.37	0.64	0.79	0.9	38.6	1.62	0.65	0.8	0.92	36.9	1.91	0.66	0.82	0.93	35	2.24	0.67	0.84	0.95
	1280	41.8	1.35	0.67	0.84	0.95	40.1	1.61	0.68	0.86	0.96	38.3	1.9	0.7	0.87	0.98	36.3	2.23	0.71	0.89	1
71°F	850	40.7	1.37	0.48	0.59	0.7	39.1	1.62	0.48	0.6	0.71	37.5	1.9	0.48	0.6	0.73	35.6	2.23	0.48	0.61	0.74
	1065	43	1.34	0.49	0.62	0.76	41.3	1.59	0.49	0.63	0.77	39.5	1.89	0.49	0.64	0.79	37.5	2.22	0.49	0.65	0.81
	1280	44.6	1.32	0.5	0.66	0.82	42.9	1.58	0.5	0.67	0.84	40.9	1.87	0.51	0.68	0.85	38.9	2.2	0.51	0.7	0.87

4 TON - LGT048H5 (FULL LOAD)

Entering Wet Bulb Temperature	Total Air Volume	Outdoor Air Temperature Entering Outdoor Coil																			
		85°F					95°F					105°F					115°F				
		Total Cool Cap.	Comp. Motor Input	Sensible To Total Ratio (S/T) Dry Bulb			Total Cool Cap.	Comp. Motor Input	Sensible To Total Ratio (S/T) Dry Bulb			Total Cool Cap.	Comp. Motor Input	Sensible To Total Ratio (S/T) Dry Bulb			Total Cool Cap.	Comp. Motor Input	Sensible To Total Ratio (S/T) Dry Bulb		
	cfm	kBtuh	kW	75°F	80°F	85°F	kBtuh	kW	75°F	80°F	85°F	kBtuh	kW	75°F	80°F	85°F	kBtuh	kW	75°F	80°F	85°F
63°F	1280	46.9	2.72	0.68	0.83	0.98	44.7	3.06	0.7	0.85	1	42.4	3.45	0.71	0.88	1	39.9	3.91	0.73	0.91	1
	1600	49.4	2.74	0.74	0.92	1	47.2	3.08	0.76	0.95	1	44.7	3.47	0.78	0.99	1	42.3	3.92	0.81	1	1
	1920	51.7	2.75	0.8	1	1	49.5	3.09	0.83	1	1	47.2	3.48	0.86	1	1	44.7	3.93	0.89	1	1
67°F	1280	49.9	2.74	0.54	0.66	0.79	47.6	3.08	0.55	0.67	0.81	45.1	3.47	0.56	0.69	0.84	42.5	3.92	0.57	0.7	0.87
	1600	52.4	2.76	0.57	0.71	0.88	49.9	3.09	0.58	0.73	0.91	47.1	3.48	0.59	0.75	0.95	44.4	3.92	0.61	0.78	0.99
	1920	54.1	2.77	0.6	0.78	0.98	51.5	3.11	0.62	0.8	1	48.7	3.49	0.63	0.83	1	45.7	3.93	0.65	0.87	1
71°F	1280	53.2	2.76	0.41	0.52	0.63	50.8	3.1	0.41	0.53	0.65	48.2	3.49	0.42	0.54	0.66	45.4	3.93	0.42	0.55	0.68
	1600	55.8	2.78	0.42	0.56	0.69	53.2	3.12	0.43	0.57	0.71	50.2	3.5	0.43	0.58	0.73	47.2	3.93	0.44	0.59	0.75
	1920	57.5	2.79	0.44	0.59	0.75	54.7	3.13	0.44	0.61	0.78	51.7	3.5	0.45	0.62	0.81	48.5	3.94	0.46	0.64	0.84

RATINGS

NOTE - For Temperatures and Capacities not shown in tables, see bulletin - Cooling Unit Rating Table Correction Factor Data in Miscellaneous Product Data section.

5 TON - LGT060H5 (PART LOAD)

Entering Wet Bulb Temperature	Total Air Volume	Outdoor Air Temperature Entering Outdoor Coil																			
		65°F					75°F					85°F					95°F				
		Total Cool Cap.	Comp. Motor Input	Sensible To Total Ratio (S/T) Dry Bulb			Total Cool Cap.	Comp. Motor Input	Sensible To Total Ratio (S/T) Dry Bulb			Total Cool Cap.	Comp. Motor Input	Sensible To Total Ratio (S/T) Dry Bulb			Total Cool Cap.	Comp. Motor Input	Sensible To Total Ratio (S/T) Dry Bulb		
	cfm	kBtuh	kW	75°F	80°F	85°F	kBtuh	kW	75°F	80°F	85°F	kBtuh	kW	75°F	80°F	85°F	kBtuh	kW	75°F	80°F	85°F
63°F	1070	47	1.78	0.64	0.77	0.93	45	2.07	0.65	0.79	0.96	42.7	2.38	0.67	0.82	0.99	40.1	2.74	0.68	0.85	1
	1335	49.8	1.77	0.69	0.86	1	47.6	2.05	0.7	0.89	1	45.1	2.38	0.72	0.93	1	42.5	2.73	0.75	0.97	1
	1600	52	1.76	0.74	0.96	1	49.9	2.05	0.76	0.99	1	47.4	2.37	0.79	1	1	45	2.73	0.83	1	1
67°F	1070	50.3	1.77	0.51	0.62	0.73	48.2	2.05	0.52	0.63	0.75	45.7	2.37	0.52	0.64	0.77	43	2.73	0.53	0.66	0.8
	1335	53.1	1.75	0.54	0.66	0.81	50.8	2.04	0.55	0.68	0.84	48.1	2.37	0.55	0.69	0.88	45.1	2.73	0.57	0.71	0.92
	1600	55.1	1.74	0.57	0.71	0.91	52.7	2.03	0.58	0.73	0.94	49.8	2.36	0.59	0.76	0.98	46.8	2.72	0.6	0.8	1
71°F	1070	53.9	1.75	0.4	0.49	0.59	51.6	2.04	0.4	0.5	0.6	49	2.36	0.4	0.51	0.62	46.1	2.72	0.4	0.52	0.63
	1335	56.8	1.73	0.4	0.52	0.64	54.3	2.03	0.41	0.53	0.65	51.4	2.35	0.41	0.54	0.67	48.3	2.72	0.42	0.55	0.69
	1600	58.8	1.72	0.42	0.55	0.69	56.1	2.02	0.42	0.56	0.71	53.1	2.35	0.42	0.58	0.73	49.9	2.71	0.43	0.59	0.76

5 TON - LGT060H5 (FULL LOAD)

Entering Wet Bulb Temperature	Total Air Volume	Outdoor Air Temperature Entering Outdoor Coil																			
		85°F					95°F					105°F					115°F				
		Total Cool Cap.	Comp. Motor Input	Sensible To Total Ratio (S/T) Dry Bulb			Total Cool Cap.	Comp. Motor Input	Sensible To Total Ratio (S/T) Dry Bulb			Total Cool Cap.	Comp. Motor Input	Sensible To Total Ratio (S/T) Dry Bulb			Total Cool Cap.	Comp. Motor Input	Sensible To Total Ratio (S/T) Dry Bulb		
	cfm	kBtuh	kW	75°F	80°F	85°F	kBtuh	kW	75°F	80°F	85°F	kBtuh	kW	75°F	80°F	85°F	kBtuh	kW	75°F	80°F	85°F
63°F	1600	59.2	3.43	0.7	0.85	1	56.7	3.82	0.71	0.87	1	54	4.29	0.72	0.9	1	51	4.83	0.74	0.93	1
	2000	62.5	3.46	0.75	0.95	1	59.6	3.86	0.78	0.98	1	56.9	4.32	0.8	1	1	54.1	4.86	0.83	1	1
	2400	65.5	3.5	0.83	1	1	62.9	3.9	0.85	1	1	60.1	4.37	0.88	1	1	57.1	4.91	0.92	1	1
67°F	1600	63	3.47	0.55	0.67	0.81	60.2	3.87	0.56	0.69	0.83	57.3	4.33	0.57	0.7	0.86	54	4.86	0.58	0.72	0.89
	2000	66	3.51	0.58	0.73	0.91	63	3.9	0.59	0.75	0.94	59.8	4.36	0.6	0.77	0.97	56.4	4.9	0.62	0.8	1
	2400	68.1	3.54	0.62	0.8	1	65.1	3.93	0.63	0.82	1	61.7	4.39	0.65	0.85	1	58.1	4.92	0.66	0.89	1
71°F	1600	67.3	3.53	0.42	0.53	0.65	64.2	3.92	0.42	0.54	0.66	61	4.38	0.42	0.55	0.68	57.6	4.92	0.43	0.56	0.7
	2000	70.4	3.57	0.43	0.57	0.71	67	3.96	0.43	0.58	0.72	63.6	4.42	0.44	0.59	0.74	59.9	4.95	0.44	0.61	0.77
	2400	72.4	3.6	0.45	0.61	0.77	69	3.99	0.45	0.62	0.8	65.3	4.45	0.46	0.64	0.83	61.6	4.97	0.46	0.65	0.87

6 TON - LGT072H5 (PART LOAD)

Entering Wet Bulb Temperature	Total Air Volume	Outdoor Air Temperature Entering Outdoor Coil																			
		65°F					75°F					85°F					95°F				
		Total Cool Cap.	Comp. Motor Input	Sensible To Total Ratio (S/T) Dry Bulb			Total Cool Cap.	Comp. Motor Input	Sensible To Total Ratio (S/T) Dry Bulb			Total Cool Cap.	Comp. Motor Input	Sensible To Total Ratio (S/T) Dry Bulb			Total Cool Cap.	Comp. Motor Input	Sensible To Total Ratio (S/T) Dry Bulb		
	cfm	kBtuh	kW	75°F	80°F	85°F	kBtuh	kW	75°F	80°F	85°F	kBtuh	kW	75°F	80°F	85°F	kBtuh	kW	75°F	80°F	85°F
63°F	1200	51.8	2.25	0.65	0.77	0.92	49.9	2.59	0.65	0.78	0.94	47.8	2.98	0.66	0.8	0.97	45.4	3.41	0.68	0.83	0.99
	1600	56.1	2.25	0.7	0.88	1	53.9	2.59	0.71	0.9	1	51.5	2.98	0.73	0.93	1	48.9	3.41	0.75	0.97	1
	2000	59.3	2.24	0.77	0.99	1	57.2	2.58	0.79	1	1	54.9	2.97	0.82	1	1	52.4	3.41	0.85	1	1
67°F	1200	55.6	2.25	0.52	0.62	0.72	53.5	2.59	0.52	0.63	0.74	51.2	2.98	0.53	0.64	0.76	48.7	3.41	0.53	0.65	0.78
	1600	59.9	2.24	0.55	0.68	0.83	57.3	2.58	0.56	0.69	0.85	54.8	2.97	0.56	0.7	0.88	51.9	3.41	0.57	0.72	0.92
	2000	62.8	2.23	0.58	0.74	0.95	60.1	2.58	0.59	0.76	0.97	57.3	2.97	0.61	0.79	1	54.2	3.4	0.62	0.82	1
71°F	1200	59.8	2.24	0.4	0.5	0.59	57.5	2.58	0.4	0.5	0.6	55	2.97	0.4	0.51	0.61	52.2	3.41	0.41	0.52	0.62
	1600	64.2	2.22	0.41	0.53	0.65	61.5	2.57	0.41	0.54	0.66	58.7	2.96	0.42	0.55	0.68	55.6	3.4	0.42	0.56	0.7
	2000	67.1	2.21	0.43	0.57	0.71	64.2	2.56	0.43	0.58	0.73	61.1	2.95	0.43	0.59	0.76	57.8	3.39	0.44	0.61	0.79

6 TON - LGT072H5 (FULL LOAD)

Entering Wet Bulb Temperature	Total Air Volume	Outdoor Air Temperature Entering Outdoor Coil																			
		85°F					95°F					105°F					115°F				
		Total Cool Cap.	Comp. Motor Input	Sensible To Total Ratio (S/T) Dry Bulb			Total Cool Cap.	Comp. Motor Input	Sensible To Total Ratio (S/T) Dry Bulb			Total Cool Cap.	Comp. Motor Input	Sensible To Total Ratio (S/T) Dry Bulb			Total Cool Cap.	Comp. Motor Input	Sensible To Total Ratio (S/T) Dry Bulb		
	cfm	kBtuh	kW	75°F	80°F	85°F	kBtuh	kW	75°F	80°F	85°F	kBtuh	kW	75°F	80°F	85°F	kBtuh	kW	75°F	80°F	85°F
63°F	1920	69.9	4.22	0.72	0.86	1	66.6	4.77	0.73	0.89	1	63.3	5.39	0.75	0.92	1	59.5	6.1	0.77	0.95	1
	2400	73.7	4.26	0.77	0.96	1	70.3	4.81	0.8	0.98	1	66.9	5.43	0.82	1	1	63.3	6.14	0.85	1	1
	2880	77.4	4.31	0.84	1	1	74	4.85	0.87	1	1	70.5	5.47	0.9	1	1	66.7	6.18	0.94	1	1
67°F	1920	74.3	4.27	0.56	0.69	0.82	70.7	4.81	0.57	0.71	0.85	67.1	5.43	0.58	0.72	0.88	63.1	6.14	0.59	0.74	0.91
	2400	77.9	4.31	0.6	0.75	0.92	73.9	4.85	0.61	0.77	0.95	69.8	5.46	0.62	0.8	0.99	65.7	6.17	0.64	0.83	1
	2880	80.4	4.34	0.64	0.82	1	76.4	4.88	0.65	0.84	1	72.2	5.49	0.67	0.88	1	67.6	6.19	0.68	0.92	1
71°F	1920	79.4	4.33	0.43	0.55	0.67	75.5	4.87	0.43	0.56	0.68	71.4	5.48	0.43	0.57	0.7	67.1	6.18	0.44	0.58	0.72
	2400	82.7	4.37	0.44	0.58	0.73	78.6	4.92	0.45	0.6	0.75	74.4	5.53	0.45	0.61	0.77	69.5	6.21	0.46	0.63	0.8
	2880	85.1	4.4	0.46	0.62	0.79	80.8	4.95	0.46	0.64	0.82	76.3	5.55	0.47	0.66	0.85	71.5	6.24	0.48	0.68	0.89

3 TON - LGT036H5 WITH HUMIDITROL® OPERATING

Entering Wet Bulb Temperature	Total Air Volume	Outdoor Air Temperature Entering Outdoor Coil																			
		65°F					75°F					85°F					95°F				
		Total Cool Cap.	Comp. Motor Input	Sensible To Total Ratio (S/T) Dry Bulb			Total Cool Cap.	Comp. Motor Input	Sensible To Total Ratio (S/T) Dry Bulb			Total Cool Cap.	Comp. Motor Input	Sensible To Total Ratio (S/T) Dry Bulb			Total Cool Cap.	Comp. Motor Input	Sensible To Total Ratio (S/T) Dry Bulb		
	cfm	kBtuh	kW	75°F	80°F	85°F	kBtuh	kW	75°F	80°F	85°F	kBtuh	kW	75°F	80°F	85°F	kBtuh	kW	75°F	80°F	85°F
63°F	640	22.2	1.58	0.40	0.54	0.69	18.0	1.70	0.31	0.49	0.67	13.8	1.86	0.17	0.41	0.64	9.7	2.07	-0.08	0.27	0.60
	800	23.9	1.62	0.43	0.60	0.77	19.5	1.72	0.34	0.57	0.77	14.1	1.90	0.19	0.49	0.77	9.3	2.10	-0.11	0.34	0.78
	950	24.9	1.66	0.47	0.67	0.86	19.4	1.78	0.38	0.63	0.88	13.8	1.93	0.21	0.57	0.91	8.5	2.13	-0.15	0.45	0.97
67°F	640	25.8	1.62	0.28	0.40	0.52	21.5	1.75	0.18	0.33	0.48	17.3	1.90	0.04	0.23	0.41	13.2	2.11	-0.19	0.07	0.31
	800	27.9	1.67	0.29	0.43	0.58	22.9	1.79	0.18	0.36	0.54	17.9	1.95	0.02	0.26	0.49	13.1	2.14	-0.25	0.07	0.39
	950	29.3	1.70	0.31	0.48	0.64	23.5	1.83	0.19	0.40	0.61	17.9	1.98	0.01	0.29	0.56	12.5	2.17	-0.32	0.08	0.48
71°F	640	29.5	1.67	0.17	0.28	0.40	25.3	1.79	0.08	0.21	0.34	21.0	1.95	-0.06	0.10	0.26	16.9	2.15	-0.25	-0.05	0.14
	800	32.0	1.72	0.18	0.31	0.44	26.9	1.84	0.07	0.22	0.38	21.9	1.99	-0.09	0.10	0.29	17.1	2.18	-0.32	-0.08	0.17
	950	33.2	1.77	0.18	0.32	0.47	27.8	1.87	0.06	0.24	0.42	22.3	2.01	-0.11	0.12	0.34	16.7	2.21	-0.40	-0.10	0.19

4 TON - LGT048H5 WITH HUMIDITROL® OPERATING

Entering Wet Bulb Temperature	Total Air Volume	Outdoor Air Temperature Entering Outdoor Coil																			
		65°F					75°F					85°F					95°F				
		Total Cool Cap.	Comp. Motor Input	Sensible To Total Ratio (S/T) Dry Bulb			Total Cool Cap.	Comp. Motor Input	Sensible To Total Ratio (S/T) Dry Bulb			Total Cool Cap.	Comp. Motor Input	Sensible To Total Ratio (S/T) Dry Bulb			Total Cool Cap.	Comp. Motor Input	Sensible To Total Ratio (S/T) Dry Bulb		
	cfm	kBtuh	kW	75°F	80°F	85°F	kBtuh	kW	75°F	80°F	85°F	kBtuh	kW	75°F	80°F	85°F	kBtuh	kW	75°F	80°F	85°F
63°F	960	26.1	2.11	0.41	0.59	0.78	20.1	2.27	0.29	0.54	0.78	14.0	2.47	0.07	0.43	0.78	8.3	2.71	-0.43	0.19	0.78
	1200	27.8	2.16	0.46	0.68	0.90	20.9	2.32	0.34	0.64	0.93	13.9	2.52	0.10	0.56	1.00	6.9	2.79	-0.59	0.33	1.00
	1440	28.7	2.20	0.51	0.77	1.00	21.0	2.36	0.40	0.76	1.00	12.9	2.57	0.15	0.73	1.00	5.4	2.81	-0.85	0.65	1.00
67°F	960	31.0	2.17	0.25	0.41	0.57	24.9	2.33	0.12	0.32	0.52	19.0	2.53	-0.09	0.18	0.44	12.9	2.80	-0.49	-0.11	0.29
	1200	33.0	2.22	0.27	0.46	0.65	26.0	2.38	0.13	0.37	0.61	18.9	2.58	-0.11	0.22	0.55	12.0	2.83	-0.63	-0.09	0.43
	1440	34.2	2.26	0.30	0.52	0.73	26.3	2.42	0.14	0.43	0.72	18.4	2.62	-0.14	0.28	0.69	10.5	2.87	-0.83	-0.09	0.62
71°F	960	36.1	2.22	0.13	0.27	0.41	30.0	2.39	0.00	0.17	0.34	23.9	2.59	-0.19	0.02	0.23	17.9	2.84	-0.52	-0.22	0.06
	1200	38.5	2.28	0.13	0.29	0.46	31.3	2.45	-0.01	0.19	0.39	24.2	2.65	-0.24	0.02	0.28	17.2	2.90	-0.65	-0.28	0.09
	1440	39.9	2.31	0.13	0.32	0.51	31.9	2.49	-0.02	0.21	0.45	23.9	2.69	-0.29	0.02	0.34	16.0	2.94	-0.82	-0.34	0.14

5 TON - LGT060H5 WITH HUMIDITROL® OPERATING

Entering Wet Bulb Temperature	Total Air Volume	Outdoor Air Temperature Entering Outdoor Coil																			
		65°F					75°F					85°F					95°F				
		Total Cool Cap.	Comp. Motor Input	Sensible To Total Ratio (S/T) Dry Bulb			Total Cool Cap.	Comp. Motor Input	Sensible To Total Ratio (S/T) Dry Bulb			Total Cool Cap.	Comp. Motor Input	Sensible To Total Ratio (S/T) Dry Bulb			Total Cool Cap.	Comp. Motor Input	Sensible To Total Ratio (S/T) Dry Bulb		
	cfm	kBtuh	kW	75°F	80°F	85°F	kBtuh	kW	75°F	80°F	85°F	kBtuh	kW	75°F	80°F	85°F	kBtuh	kW	75°F	80°F	85°F
63°F	1080	31.8	2.86	0.34	0.52	0.70	25.5	3.04	0.23	0.45	0.67	19.2	3.28	0.05	0.34	0.63	12.9	3.60	-0.32	0.13	0.57
	1350	34.0	2.95	0.39	0.59	0.80	26.6	3.13	0.27	0.54	0.80	19.0	3.37	0.06	0.44	0.80	11.4	3.70	-0.42	0.21	0.81
	1620	35.2	3.02	0.43	0.67	0.91	26.8	3.20	0.31	0.63	0.93	18.2	3.44	0.09	0.56	0.98	9.7	3.77	-0.56	0.35	1.00
67°F	1080	37.6	2.95	0.20	0.35	0.50	31.1	3.13	0.08	0.26	0.44	24.6	3.37	-0.10	0.13	0.36	18.2	3.71	-0.41	-0.09	0.22
	1350	40.2	3.05	0.22	0.39	0.57	32.6	3.23	0.09	0.31	0.52	24.9	3.47	-0.13	0.16	0.45	17.3	3.80	-0.52	-0.11	0.31
	1620	41.7	3.13	0.24	0.44	0.64	33.1	3.31	0.09	0.35	0.61	24.4	3.55	-0.15	0.20	0.55	15.7	3.87	-0.66	-0.11	0.43
71°F	1080	43.6	3.05	0.09	0.22	0.35	37.0	3.23	-0.02	0.13	0.28	30.4	3.48	-0.19	-0.01	0.18	23.8	3.81	-0.45	-0.21	0.03
	1350	46.6	3.16	0.09	0.24	0.39	38.9	3.34	-0.04	0.14	0.32	31.1	3.59	-0.24	-0.01	0.22	23.3	3.91	-0.57	-0.26	0.04
	1620	48.6	3.25	0.09	0.27	0.44	39.8	3.43	-0.06	0.16	0.37	30.9	3.67	-0.29	-0.01	0.26	22.1	3.99	-0.71	-0.32	0.07

6 TON - LGT072H5 WITH HUMIDITROL® OPERATING

Entering Wet Bulb Temperature	Total Air Volume	Outdoor Air Temperature Entering Outdoor Coil																			
		65°F					75°F					85°F					95°F				
		Total Cool Cap.	Comp. Motor Input	Sensible To Total Ratio (S/T) Dry Bulb			Total Cool Cap.	Comp. Motor Input	Sensible To Total Ratio (S/T) Dry Bulb			Total Cool Cap.	Comp. Motor Input	Sensible To Total Ratio (S/T) Dry Bulb			Total Cool Cap.	Comp. Motor Input	Sensible To Total Ratio (S/T) Dry Bulb		
	cfm	kBtuh	kW	75°F	80°F	85°F	kBtuh	kW	75°F	80°F	85°F	kBtuh	kW	75°F	80°F	85°F	kBtuh	kW	75°F	80°F	85°F
63°F	1200	36.0	3.38	0.32	0.50	0.67	29.3	3.61	0.21	0.42	0.63	22.5	3.93	0.02	0.30	0.58	15.6	4.35	-0.32	0.09	0.49
	1500	38.1	3.47	0.36	0.57	0.77	30.2	3.71	0.24	0.50	0.76	22.1	4.03	0.03	0.39	0.74	14.1	4.44	-0.42	0.15	0.70
	1800	39.5	3.54	0.41	0.64	0.88	30.4	3.78	0.28	0.59	0.89	21.2	4.10	0.05	0.50	0.92	12.0	4.51	-0.55	0.27	0.95
67°F	1200	42.1	3.47	0.18	0.33	0.48	35.2	3.71	0.06	0.24	0.42	28.2	4.04	-0.12	0.10	0.33	21.4	4.45	-0.41	-0.11	0.18
	1500	44.8	3.56	0.19	0.37	0.55	36.7	3.81	0.06	0.28	0.49	28.4	4.13	-0.15	0.13	0.40	20.2	4.54	-0.53	-0.13	0.26
	1800	46.4	3.63	0.21	0.42	0.62	37.1	3.87	0.07	0.32	0.57	27.8	4.20	-0.18	0.16	0.50	18.4	4.61	-0.67	-0.15	0.37
71°F	1200	48.6	3.56	0.07	0.20	0.33	41.6	3.81	-0.04	0.11	0.26	34.5	4.14	-0.21	-0.03	0.15	27.4	4.55	-0.46	-0.23	0.00
	1500	51.7	3.66	0.07	0.22	0.37	43.5	3.90	-0.07	0.11	0.30	35.1	4.24	-0.27	-0.04	0.18	26.7	4.65	-0.58	-0.29	0.01
	1800	53.6	3.73	0.06	0.24	0.42	44.3	3.98	-0.09	0.13	0.34	34.7	4.31	-0.32	-0.05	0.23	25.2	4.72	-0.72	-0.35	0.03

BLOWER DATA — 0.5 HP

BLOWER TABLE INCLUDES RESISTANCE FOR BASE UNIT ONLY WITH DRY INDOOR COIL AND AIR FILTERS IN PLACE.

FOR ALL UNITS ADD:
1 - Any factory installed options air resistance (heat section, economizer, etc.).
2 - Any field installed accessories air resistance (duct resistance, diffuser, etc.).

Minimum Air Volume Required For Different Gas Heat Sizes:
Standard Heat - 960 cfm; Medium Heat - 1150 cfm; High Heat - 1500 cfm

See page 29 for wet coil and options/accessory air resistance data.

DOWNFLOW

External Static Press. in. w.g.	Percentage of Total Motor Torque																										
	20%			30%			40%			50%			60%			70%			80%			90%			100%		
	Cfm	Watts	RPM	Cfm	Watts	RPM	Cfm	Watts	RPM	Cfm	Watts	RPM	Cfm	Watts	RPM	Cfm	Watts	RPM	Cfm	Watts	RPM	Cfm	Watts	RPM	Cfm	Watts	RPM
0	811	50	415	994	82	473	1177	114	531	1319	154	579	1461	194	626	1564	236	663	1667	278	700	1804	349	753	1878	396	783
0.1	716	47	494	906	81	547	1095	115	599	1243	158	642	1391	200	685	1500	243	718	1608	286	751	1753	361	798	1833	409	824
0.2	631	49	570	827	85	618	1023	121	665	1176	165	704	1329	209	742	1442	254	772	1555	299	802	1708	375	843	1794	425	865
0.3	556	54	644	758	92	687	960	130	729	1118	176	764	1275	222	799	1392	268	825	1509	314	851	1668	392	888	1759	443	907
0.4	489	62	715	696	102	753	903	142	791	1065	189	822	1227	236	853	1347	284	877	1467	331	900	1632	410	932	1726	462	949
0.5	- - -	- - -	- - -	- - -	- - -	- - -	851	155	851	1017	204	879	1183	253	906	1306	301	927	1429	349	948	1597	430	976	1693	481	991
0.6	- - -	- - -	- - -	- - -	- - -	- - -	804	170	909	973	220	933	1141	269	957	1267	318	976	1392	367	994	1562	449	1019	1660	501	1032
0.7	- - -	- - -	- - -	- - -	- - -	- - -	759	184	964	930	235	985	1101	286	1006	1228	336	1023	1355	385	1039	1527	467	1062	1624	519	1074
0.8	- - -	- - -	- - -	- - -	- - -	- - -	716	199	1017	889	251	1036	1061	302	1054	1189	352	1069	1317	402	1083	1489	484	1103	1585	535	1115
0.9	- - -	- - -	- - -	- - -	- - -	- - -	671	211	1067	845	264	1083	1019	316	1099	1148	366	1112	1276	416	1125	1447	499	1144	1540	549	1156
1.0	- - -	- - -	- - -	- - -	- - -	- - -	625	222	1114	800	275	1128	974	327	1142	1102	378	1154	1230	428	1165	1400	510	1183	1489	559	1196
1.1	- - -	- - -	- - -	- - -	- - -	- - -	576	230	1158	751	283	1170	925	336	1182	1052	387	1193	1179	437	1203	1345	518	1221	1430	566	1235
1.2	- - -	- - -	- - -	- - -	- - -	- - -	521	234	1199	695	288	1210	869	341	1220	995	391	1230	1121	441	1240	1283	521	1258	1361	567	1273
1.3	- - -	- - -	- - -	- - -	- - -	- - -	- - -	- - -	- - -	- - -	- - -	- - -	806	340	1255	930	390	1265	1054	440	1274	1210	519	1293	1281	562	1311
1.4	- - -	- - -	- - -	- - -	- - -	- - -	- - -	- - -	- - -	- - -	- - -	- - -	734	335	1288	856	384	1297	977	433	1306	1126	510	1326	1188	552	1347

HORIZONTAL

External Static Press. in. w.g.	Percentage of Total Motor Torque																										
	20%			30%			40%			50%			60%			70%			80%			90%			100%		
	Cfm	Watts	RPM	Cfm	Watts	RPM	Cfm	Watts	RPM	Cfm	Watts	RPM	Cfm	Watts	RPM	Cfm	Watts	RPM	Cfm	Watts	RPM	Cfm	Watts	RPM	Cfm	Watts	RPM
0	794	45	388	970	76	454	1146	107	519	1281	149	575	1416	191	630	1522	110	678	1627	293	726	1715	351	768	1802	408	810
0.1	709	44	460	895	78	519	1080	111	577	1223	155	627	1366	199	677	1477	251	721	1588	303	764	1681	362	804	1773	420	843
0.2	630	46	531	855	82	583	1019	117	634	1169	163	679	1318	208	723	1435	262	763	1552	315	803	1648	375	841	1743	434	878
0.3	556	51	602	759	88	646	961	125	690	1117	172	730	1273	219	769	1395	274	805	1516	328	841	1615	388	877	1714	448	912
0.4	486	58	671	696	97	709	906	135	746	1068	184	781	1230	232	815	1356	288	848	1481	343	880	1582	403	914	1683	463	948
0.5	420	66	740	637	107	771	854	147	802	1021	196	831	1188	245	860	1317	301	890	1446	357	919	1549	418	951	1652	478	983
0.6	- - -	- - -	- - -	- - -	- - -	- - -	804	159	856	946	209	881	1147	259	905	1279	316	932	1410	372	958	1514	432	989	1618	492	1019
0.7	- - -	- - -	- - -	- - -	- - -	- - -	756	172	910	932	223	930	1107	273	949	1241	330	973	1374	386	996	1478	446	1026	1582	506	1055
0.8	- - -	- - -	- - -	- - -	- - -	- - -	709	185	962	888	236	978	1066	287	993	1201	344	1014	1336	400	1034	1440	460	1063	1544	519	1091
0.9	- - -	- - -	- - -	- - -	- - -	- - -	663	197	1013	844	249	1025	1025	300	1036	1161	357	1054	1296	413	1072	1399	472	1100	1502	530	1127
1.0	- - -	- - -	- - -	- - -	- - -	- - -	- - -	- - -	- - -	- - -	- - -	- - -	982	313	1078	1118	369	1094	1254	424	1109	1355	482	1136	1456	540	1163
1.1	- - -	- - -	- - -	- - -	- - -	- - -	- - -	- - -	- - -	- - -	- - -	- - -	938	323	1119	1073	379	1133	1208	434	1146	1307	491	1172	1406	548	1198
1.2	- - -	- - -	- - -	- - -	- - -	- - -	- - -	- - -	- - -	- - -	- - -	- - -	892	332	1158	1026	387	1170	1159	441	1182	1255	497	1208	1351	553	1233
1.3	- - -	- - -	- - -	- - -	- - -	- - -	- - -	- - -	- - -	- - -	- - -	- - -	843	340	1197	975	393	1207	1106	446	1216	1198	501	1242	1290	555	1268
1.4	- - -	- - -	- - -	- - -	- - -	- - -	- - -	- - -	- - -	- - -	- - -	- - -	790	344	1234	920	396	1242	1049	448	1250	1137	501	1276	1224	553	1302

BLOWER DATA — 1.0 HP

BLOWER TABLE INCLUDES RESISTANCE FOR BASE UNIT ONLY WITH DRY INDOOR COIL AND AIR FILTERS IN PLACE.

FOR ALL UNITS ADD:
1 - Any factory installed options air resistance (heat section, economizer, etc.).
2 - Any field installed accessories air resistance (duct resistance, diffuser, etc.).

Minimum Air Volume Required For Different Gas Heat Sizes:
Standard Heat - 960 cfm; Medium Heat - 1150 cfm; High Heat - 1500 cfm

See page 29 for wet coil and options/accessory air resistance data.

DOWNFLOW

External Static Press. in. w.g.	Percentage of Total Motor Torque																										
	20%			30%			40%			50%			60%			70%			80%			90%			100%		
	Cfm	Watts	RPM	Cfm	Watts	RPM	Cfm	Watts	RPM	Cfm	Watts	RPM	Cfm	Watts	RPM	Cfm	Watts	RPM	Cfm	Watts	RPM	Cfm	Watts	RPM	Cfm	Watts	RPM
0	1067	112	488	1325	196	573	1583	279	657	1759	381	726	1934	482	794	2046	579	845	2157	676	896	2285	816	956	2358	925	989
0.1	984	97	537	1249	184	616	1513	270	695	1697	376	760	1881	481	825	2002	584	873	2123	686	921	2273	838	978	2352	947	1008
0.2	912	91	587	1183	180	661	1453	268	735	1644	377	796	1835	486	856	1964	593	902	2093	700	947	2264	863	1001	2349	973	1030
0.3	851	92	636	1126	183	706	1400	273	775	1597	385	832	1794	497	889	1931	607	932	2067	717	974	2256	891	1026	2348	1001	1053
0.4	797	100	687	1075	192	751	1353	283	815	1555	397	869	1757	511	922	1901	625	962	2044	738	1002	2248	919	1051	2347	1031	1077
0.5	752	114	737	1032	206	796	1312	298	855	1518	413	905	1724	528	955	1873	644	993	2021	760	1030	2239	948	1078	2345	1061	1102
0.6	712	132	787	994	224	842	1275	316	896	1484	432	942	1692	548	988	1845	666	1024	1998	783	1059	2228	977	1104	- - -	- - -	- - -
0.7	678	155	836	960	246	886	1242	336	936	1452	452	979	1662	568	1021	1818	687	1055	1974	806	1088	2214	1004	1131	- - -	- - -	- - -
0.8	648	180	885	929	269	931	1210	358	976	1421	474	1016	1632	589	1055	1790	709	1086	1948	828	1117	2195	1028	1158	- - -	- - -	- - -
0.9	621	207	933	900	294	974	1179	381	1015	1390	495	1051	1600	609	1087	1760	728	1117	1919	847	1146	2170	1049	1185	- - -	- - -	- - -
1.0	596	235	981	872	319	1017	1148	403	1053	1357	516	1086	1566	628	1119	1725	746	1147	1884	864	1174	2139	1066	1212	- - -	- - -	- - -
1.1	- - -	- - -	- - -	- - -	- - -	- - -	1115	424	1090	1322	534	1120	1528	643	1150	1686	760	1176	1844	876	1201	2100	1078	1238	- - -	- - -	- - -
1.2	- - -	- - -	- - -	- - -	- - -	- - -	1080	443	1126	1283	549	1153	1485	655	1180	1641	770	1204	1797	884	1228	2052	1083	1264	- - -	- - -	- - -
1.3	- - -	- - -	- - -	- - -	- - -	- - -	1040	458	1161	1238	561	1185	1436	663	1209	1589	775	1231	1742	886	1253	1993	1081	1288	- - -	- - -	- - -
1.4	- - -	- - -	- - -	- - -	- - -	- - -	996	469	1194	1189	567	1215	1381	665	1236	1530	773	1257	1678	881	1277	1923	1071	1311	- - -	- - -	- - -

HORIZONTAL

External Static Press. in. w.g.	Percentage of Total Motor Torque																										
	20%			30%			40%			50%			60%			70%			80%			90%			100%		
	Cfm	Watts	RPM	Cfm	Watts	RPM	Cfm	Watts	RPM	Cfm	Watts	RPM	Cfm	Watts	RPM	Cfm	Watts	RPM	Cfm	Watts	RPM	Cfm	Watts	RPM	Cfm	Watts	RPM
0	1087	111	493	1304	184	579	1520	257	665	1689	368	738	1857	478	810	1972	588	864	2087	698	918	2196	844	975	2283	925	1000
0.1	1021	104	537	1246	180	618	1470	255	699	1646	368	768	1821	480	837	1941	592	888	2061	704	938	2179	852	992	2255	926	1017
0.2	961	102	582	1193	181	658	1425	259	734	1607	373	799	1789	487	864	1914	601	912	2039	714	960	2163	864	1012	2231	932	1034
0.3	906	106	628	1145	186	699	1384	266	769	1572	382	831	1759	498	892	1889	613	938	2018	728	984	2149	879	1033	2209	941	1053
0.4	855	113	674	1101	196	740	1347	278	806	1540	396	864	1732	513	921	1866	629	965	1999	744	1008	2134	896	1054	- - -	- - -	- - -
0.5	808	125	720	1060	209	781	1312	293	842	1509	412	896	1706	530	950	1843	646	992	1980	762	1033	2119	915	1077	- - -	- - -	- - -
0.6	764	139	766	1022	225	823	1279	310	879	1481	430	930	1682	549	980	1821	666	1019	1960	782	1058	2102	935	1101	- - -	- - -	- - -
0.7	722	155	812	985	242	864	1247	328	916	1452	449	964	1657	569	1011	1799	686	1048	1940	803	1084	2084	955	1125	- - -	- - -	- - -
0.8	682	172	858	949	260	906	1216	348	953	1424	469	997	1632	589	1041	1776	706	1076	1919	823	1111	2063	974	1150	- - -	- - -	- - -
0.9	643	191	903	914	279	946	1185	367	989	1396	489	1030	1606	610	1071	1751	727	1104	1895	843	1137	2039	992	1175	- - -	- - -	- - -
1.0	- - -	- - -	- - -	- - -	- - -	- - -	1153	386	1024	1366	508	1062	1579	629	1100	1724	745	1132	1869	861	1163	2011	1008	1201	- - -	- - -	- - -
1.1	- - -	- - -	- - -	- - -	- - -	- - -	1120	404	1059	1334	525	1095	1548	646	1130	1694	761	1160	1839	876	1189	1979	1021	1226	- - -	- - -	- - -
1.2	- - -	- - -	- - -	- - -	- - -	- - -	1085	420	1093	1300	541	1126	1515	661	1158	1660	775	1186	1805	889	1214	1941	1031	1250	- - -	- - -	- - -
1.3	- - -	- - -	- - -	- - -	- - -	- - -	1047	433	1126	1263	553	1156	1478	672	1186	1622	785	1213	1766	898	1239	1897	1037	1275	- - -	- - -	- - -
1.4	- - -	- - -	- - -	- - -	- - -	- - -	1005	442	1158	1221	561	1185	1436	680	1212	1579	792	1238	1721	903	1263	1847	1037	1298	- - -	- - -	- - -

BLOWER DATA 1.5 HP

BLOWER TABLE INCLUDES RESISTANCE FOR BASE UNIT ONLY WITH DRY INDOOR COIL AND AIR FILTERS IN PLACE.

FOR ALL UNITS ADD:
1 - Any factory installed options air resistance (heat section, economizer, etc.).
2 - Any field installed accessories air resistance (duct resistance, diffuser, etc.).

Minimum Air Volume Required For Different Gas Heat Sizes:
Standard Heat - 1075 cfm; Medium Heat - 1150 cfm; High Heat - 1500 cfm

See page 29 for wet coil and options/accessory air resistance data.

DOWNFLOW

Total Air cfm	Total Static Pressure - in. w.g.																									
	0.1		0.2		0.3		0.4		0.5		0.6		0.7		0.8		0.9		1.0		1.1		1.2		1.3	
	RPM	Watts	RPM	Watts	RPM	Watts	RPM	Watts	RPM	Watts	RPM	Watts	RPM	Watts	RPM	Watts	RPM	Watts	RPM	Watts	RPM	Watts	RPM	Watts	RPM	Watts
400	- - -	- - -	734	19	823	40	910	60	985	78	- - -	- - -	- - -	- - -	- - -	- - -	- - -	- - -	- - -	- - -	- - -	- - -	- - -	- - -	- - -	- - -
600	766	28	856	51	944	73	1029	93	1108	111	1180	127	1248	139	1315	149	1383	158	1451	169	- - -	- - -	- - -	- - -	- - -	- - -
800	899	57	989	81	1079	104	1163	125	1242	145	1317	161	1386	174	1454	185	1519	198	1582	214	1643	234	1701	255	1755	281
1000	1084	95	1163	117	1244	139	1323	160	1398	180	1470	196	1538	211	1603	227	1663	245	1721	267	1776	292	1828	320	1876	350
1200	1319	113	1385	138	1451	162	1517	186	1581	209	1644	231	1703	254	1759	278	1812	306	1863	337	1912	367	1960	397	2003	427
1400	1542	146	1596	177	1649	208	1703	239	1757	269	1809	300	1860	331	1909	362	1956	393	2003	425	2050	456	2095	483	2139	508
1600	1721	225	1772	258	1823	291	1873	324	1923	356	1972	388	2019	419	2065	450	2110	480	2156	510	2200	539	2244	565	2287	590
1800	1909	309	1957	341	2006	373	2054	404	2101	435	2146	465	2190	495	2234	526	2277	557	2320	588	2362	620	2404	651	2444	685
2000	2103	385	2148	417	2193	450	2239	483	2283	516	2325	550	2367	584	2408	620	2449	658	2490	696	2529	735	2568	777	2605	822
2200	2299	478	2342	514	2384	552	2426	590	2467	630	2507	671	2547	714	2586	757	2625	800	2663	844	2700	889	2735	935	2770	982
2400	2500	606	2540	647	2580	690	2618	734	2656	779	2694	824	2731	870	2768	915	2804	961	2839	1006	2874	1051	2907	1096	2941	1141
2600	2704	768	2741	810	2778	855	2813	901	2849	947	2884	993	2918	1039	2952	1085	2986	1129	3019	1173	3051	1217	3083	1259	3115	1300
2800	2908	941	2943	985	2976	1030	3010	1076	3042	1121	3075	1166	3107	1210	3139	1253	3170	1296	3200	1338	3231	1379	3261	1419	3290	1456
3000	3110	1111	3142	1156	3173	1201	3205	1245	3236	1289	3267	1332	3296	1373	3325	1414	3354	1455	3382	1496	3412	1536	3439	1573	3465	1609

Total Air cfm	Total Static Pressure - in. w.g.													
	1.4		1.5		1.6		1.7		1.8		1.9		2.0	
	RPM	Watts	RPM	Watts	RPM	Watts	RPM	Watts	RPM	Watts	RPM	Watts	RPM	Watts
800	1805	309	1850	337	1895	366	1940	392	- - -	- - -	- - -	- - -	- - -	- - -
1000	1920	380	1962	410	2005	439	2050	466	2094	492	2138	517	2181	541
1200	2045	456	2087	484	2130	510	2174	537	2217	563	2260	589	2302	615
1400	2182	531	2225	555	2268	581	2310	610	2352	640	2393	671	2433	703
1600	2330	616	2371	645	2412	678	2452	713	2491	750	2530	787	2568	824
1800	2484	723	2523	765	2561	808	2598	849	2636	890	2672	931	2708	971
2000	2641	868	2677	915	2713	961	2749	1003	2784	1044	2819	1084	2853	1124
2200	2804	1028	2839	1072	2873	1114	2907	1155	2940	1194	2973	1234	3006	1272
2400	2974	1184	3006	1225	3039	1266	3071	1305	3103	1344	3134	1382	3166	1420
2600	3146	1340	3177	1379	3207	1417	3238	1456	3269	1494	3299	1532	3329	1569
2800	3319	1493	3347	1530	3376	1567	3406	1605	3435	1643	3465	1681	3495	1718
3000	3491	1644	3517	1680	3543	1716	3572	1754	3602	1792	3631	1830	3661	1867

BLOWER DATA — 1.5 HP

BLOWER TABLE INCLUDES RESISTANCE FOR BASE UNIT ONLY WITH DRY INDOOR COIL AND AIR FILTERS IN PLACE.

FOR ALL UNITS ADD:
1 - Any factory installed options air resistance (heat section, economizer, etc.).
2 - Any field installed accessories air resistance (duct resistance, diffuser, etc.).

Minimum Air Volume Required For Different Gas Heat Sizes:
Standard Heat - 1075 cfm; Medium Heat - 1150 cfm; High Heat - 1500 cfm

See page 29 for wet coil and options/accessory air resistance data.

HORIZONTAL

Total Air cfm	Total Static Pressure - in. w.g.																									
	0.1		0.2		0.3		0.4		0.5		0.6		0.7		0.8		0.9		1.0		1.1		1.2		1.3	
	RPM	Watts	RPM	Watts	RPM	Watts	RPM	Watts	RPM	Watts	RPM	Watts	RPM	Watts	RPM	Watts	RPM	Watts	RPM	Watts	RPM	Watts	RPM	Watts	RPM	Watts
400	708	16	793	37	872	53	- - -	- - -	- - -	- - -	- - -	- - -	- - -	- - -	- - -	- - -	- - -	- - -	- - -	- - -	- - -	- - -	- - -	- - -	- - -	- - -
600	835	46	918	65	1000	82	1077	95	1149	107	1221	109	- - -	- - -	- - -	- - -	- - -	- - -	- - -	- - -	- - -	- - -	- - -	- - -	- - -	- - -
800	981	75	1064	92	1144	109	1221	124	1294	139	1365	148	1434	154	1497	163	1555	179	1607	200	1656	226	1704	254	- - -	- - -
1000	1166	105	1241	124	1315	141	1387	159	1454	176	1520	191	1582	207	1638	227	1689	252	1737	279	1783	308	1829	335	1873	362
1200	1374	142	1440	162	1506	182	1569	203	1630	224	1687	246	1739	271	1787	299	1832	330	1876	361	1920	391	1964	419	2007	444
1400	1591	183	1647	209	1701	235	1755	263	1806	291	1854	320	1899	351	1942	382	1984	412	2026	442	2068	469	2110	496	2153	520
1600	1778	258	1827	290	1876	323	1923	355	1970	386	2015	416	2059	444	2102	470	2144	494	2185	519	2227	545	2268	572	2309	600
1800	1973	352	2018	383	2063	415	2107	445	2151	476	2194	504	2237	531	2279	557	2319	584	2359	613	2397	645	2435	679	2471	713
2000	2182	437	2224	468	2265	499	2306	531	2346	563	2385	596	2424	630	2461	666	2496	705	2530	745	2564	786	2598	826	2631	866
2200	2388	540	2426	576	2464	613	2500	651	2536	691	2571	731	2605	774	2637	819	2668	863	2700	907	2732	949	2764	990	2795	1029
2400	2589	679	2624	719	2658	761	2691	803	2724	846	2756	890	2786	935	2816	980	2846	1025	2876	1068	2907	1109	2937	1149	2967	1188
2600	2787	845	2819	887	2850	930	2881	973	2911	1017	2941	1060	2970	1104	2999	1147	3028	1189	3057	1230	3087	1270	- - -	- - -	- - -	- - -
2800	2983	1021	3013	1063	3042	1106	3070	1149	3099	1191	- - -	- - -	- - -	- - -	- - -	- - -	- - -	- - -	- - -	- - -	- - -	- - -	- - -	- - -	- - -	- - -

Total Air cfm	Total Static Pressure - in. w.g.													
	1.4		1.5		1.6		1.7		1.8		1.9		2.0	
	RPM	Watts	RPM	Watts	RPM	Watts	RPM	Watts	RPM	Watts	RPM	Watts	RPM	Watts
800	- - -	- - -	- - -	- - -	- - -	- - -	- - -	- - -	- - -	- - -	- - -	- - -	- - -	- - -
1000	1916	386	1957	408	1998	428	2037	447	2077	465	- - -	- - -	- - -	- - -
1200	2049	468	2089	490	2128	510	2168	529	2207	549	2246	569	2285	591
1400	2194	543	2235	565	2274	588	2313	611	2350	637	2387	664	2423	694
1600	2349	627	2387	657	2423	688	2457	722	2490	757	2522	793	2554	830
1800	2506	749	2539	787	2571	825	2602	864	2632	903	2662	942	2692	981
2000	2663	906	2694	945	2725	985	2755	1024	2785	1063	2815	1101	2845	1138
2200	2826	1068	2857	1107	2887	1146	2916	1184	2946	1221	2975	1259	3005	1296
2400	2997	1227	3027	1266	3056	1304	3085	1342	- - -	- - -	- - -	- - -	- - -	- - -
2600	- - -	- - -	- - -	- - -	- - -	- - -	- - -	- - -	- - -	- - -	- - -	- - -	- - -	- - -
2800	- - -	- - -	- - -	- - -	- - -	- - -	- - -	- - -	- - -	- - -	- - -	- - -	- - -	- - -

BLOWER DATA

FACTORY INSTALLED OPTIONS/FIELD INSTALLED ACCESSORY AIR RESISTANCE - in. w.g.

Air Volume cfm	Wet Indoor Coil	Humiditrol® Reheat Coil	Gas Heating			Economizer	Filters		
			Standard Heat	Medium Heat	High Heat		MERV 8	MERV 13	MERV 16
800	0.01	- - -	0.02	0.02	0.02	0.04	0.04	0.05	0.04
1000	0.02	0.00	0.02	0.02	0.02	0.04	0.04	0.07	0.05
1200	0.04	0.00	0.02	0.02	0.02	0.04	0.04	0.07	0.05
1400	0.05	0.01	0.02	0.02	0.03	0.04	0.04	0.07	0.06
1600	0.07	0.02	0.02	0.03	0.04	0.04	0.04	0.07	0.08
1800	0.08	0.02	0.03	0.04	0.05	0.05	0.04	0.07	0.09
2000	0.10	0.02	0.03	0.04	0.06	0.05	0.05	0.08	0.10
2200	0.11	0.04	0.04	0.04	0.07	0.05	0.05	0.08	0.11
2400	0.13	0.04	0.04	0.05	0.08	0.05	0.05	0.08	0.12

POWER EXHAUST FAN PERFORMANCE

Return Air System Static Pressure in. w.g.	Air Volume Exhausted cfm
0.00	2000
0.05	1990
0.10	1924
0.15	1810
0.20	1664
0.25	1507
0.30	1350
0.35	1210

BLOWER DATA

CEILING DIFFUSERS AIR RESISTANCE (in. w.g.)

Air Volume cfm	RTD9-65S Step–Down Diffuser			FD9-65S Flush Diffuser	RTD11-95S Step–Down Diffuser			FD11-95S Flush Diffuser
	2 Ends Open	1 Side & 2 Ends Open	All Ends & Sides Open		2 Ends Open	1 Side & 2 Ends Open	All Ends & Sides Open	
800	0.15	0.13	0.11	0.11	- - -	- - -	- - -	- - -
1000	0.19	0.16	0.14	0.14	- - -	- - -	- - -	- - -
1200	0.25	0.20	0.17	0.17	- - -	- - -	- - -	- - -
1400	0.33	0.26	0.20	0.20	- - -	- - -	- - -	- - -
1600	0.43	0.32	0.20	0.24	- - -	- - -	- - -	- - -
1800	0.56	0.40	0.30	0.30	0.13	0.11	0.09	0.09
2000	0.73	0.50	0.36	0.36	0.15	0.13	0.11	0.10
2200	0.95	0.63	0.44	0.44	0.18	0.15	0.12	0.12
2400	- - -	- - - -	- - -	- - -	0.21	0.18	0.15	0.14
2600	- - -	- - - -	- - -	- - -	0.24	0.21	0.18	0.17
2800	- - -	- - - -	- - -	- - -	0.27	0.24	0.21	0.20
3000	- - -	- - - -	- - -	- - -	0.32	0.29	0.25	0.25

CEILING DIFFUSER AIR THROW DATA

Air Volume - cfm	[1] Effective Throw - ft.	
Model	**RTD9-65S**	**FD9-65S**
800	10 - 17	14 - 18
1000	10 - 17	15 - 20
1200	11 - 18	16 - 22
1400	12 - 19	17 - 24
1600	12 - 20	18 - 25
1800	13 - 21	20 - 28
2000	14 - 23	21 - 29
2200	16 - 25	22 - 30
Model	**RTD11-95S**	**FD11-95S**
2600	24 - 29	19 - 24
2800	25 - 30	20 - 28
3000	27 - 33	21 - 29

[1] Effective throw based on terminal velocities of 75 ft. per minute.

ELECTRICAL DATA — 3 TON

Model		LGT036H5E						
[1] Voltage - 60Hz		208/230V - 1 Ph	208/230V - 3 Ph		460V - 3 Ph		575V - 3 Ph	
Compressor	Rated Load Amps	14.3	9.1		4.6		3.5	
	Locked Rotor Amps	76	70		39		28.9	
Outdoor Fan Motor	Full Load Amps (1 ECM)	2.8	2.8		1.4		1.1	
Power Exhaust (1) 0.33 HP	Full Load Amps	2.4	2.4		1.3		1	
Service Outlet 115V GFI (amps)		15	15		15		20	
Indoor Blower Motor	HP	0.5	0.5	1.5	0.5	1.5	0.5	1.5
	Full Load Amps	4.3	4.3	4.4	2.2	2.3	1.7	2.3
[2] Maximum Overcurrent Protection (MOCP)	Unit Only	35	25	25	15	15	15	15
	With (1) 0.33 HP Power Exhaust	40	25	30	15	15	15	15
[3] Minimum Circuit Ampacity (MCA	Unit Only	25	19	19	10	10	8	8
	With (1) 0.33 HP Power Exhaust	28	21	21	11	11	9	9

NOTE - All units have a minimum Short Circuit Current Rating (SCCR) of 5000 amps.

[1] Extremes of operating range are plus and minus 10% of line voltage.

[2] HACR type breaker or fuse.

[3] Refer to National or Canadian Electrical Code manual to determine wire, fuse and disconnect size requirements.

ELECTRICAL DATA — 4 TON

Model		LGT048H5E						
[1] Voltage - 60Hz		208/230V - 1 Ph	208/230V - 3 Ph		460V - 3 Ph		575V - 3 Ph	
Compressor	Rated Load Amps	17.2	10.2		6.1		3.7	
	Locked Rotor Amps	121	123		60		41	
Outdoor Fan Motor	Full Load Amps (1 ECM)	2.8	2.8		1.4		1.1	
Power Exhaust (1) 0.33 HP	Full Load Amps	2.4	2.4		1.3		1	
Service Outlet 115V GFI (amps)		15	15		15		20	
Indoor Blower Motor	HP	1	1	1.5	1	1.5	1	1.5
	Full Load Amps	7.4	7.4	4.4	3.7	2.3	3	2.3
[2] Maximum Overcurrent Protection (MOCP)	Unit Only	45	30	30	15	15	15	15
	With (1) 0.33 HP Power Exhaust	50	35	30	20	15	15	15
[3] Minimum Circuit Ampacity (MCA	Unit Only	32	23	20	13	12	9	9
	With (1) 0.33 HP Power Exhaust	35	26	23	15	13	10	10

NOTE - All units have a minimum Short Circuit Current Rating (SCCR) of 5000 amps.

[1] Extremes of operating range are plus and minus 10% of line voltage.

[2] HACR type breaker or fuse.

[3] Refer to National or Canadian Electrical Code manual to determine wire, fuse and disconnect size requirements.

ELECTRICAL DATA — 5 TON

Model		LGT060H5E						
[1] Voltage - 60Hz		208/230V - 1 Ph	208/230V - 3 Ph		460V - 3 Ph		575V - 3 Ph	
Compressor	Rated Load Amps	23.7	12.4		6.5		4.8	
	Locked Rotor Amps	123	93		60		41	
Outdoor Fan Motor	Full Load Amps (1 ECM)	2.8	2.8		1.4		1.1	
Power Exhaust (1) 0.33 HP	Full Load Amps	2.4	2.4		1.3		1	
Service Outlet 115V GFI (amps)		15	15		15		20	
Indoor Blower Motor	HP	1	1	1.5	1	1.5	1	1.5
	Full Load Amps	7.4	7.4	4.4	3.7	2.3	3	2.3
[2] Maximum Overcurrent Protection (MOCP)	Unit Only	60	35	35	15	15	15	15
	With (1) 0.33 HP Power Exhaust	60	40	35	20	15	15	15
[3] Minimum Circuit Ampacity (MCA	Unit Only	40	26	23	14	12	11	10
	With (1) 0.33 HP Power Exhaust	43	29	26	15	14	12	11

NOTE - All units have a minimum Short Circuit Current Rating (SCCR) of 5000 amps.

[1] Extremes of operating range are plus and minus 10% of line voltage.

[2] HACR type breaker or fuse.

[3] Refer to National or Canadian Electrical Code manual to determine wire, fuse and disconnect size requirements.

ELECTRICAL DATA — 6 TON

Model		LGT072H5E		
[1] Voltage - 60Hz		208/230V - 3 Ph	460V - 3 Ph	575 - 3Ph
Compressor	Rated Load Amps	19.2	9.1	6.2
	Locked Rotor Amps	162.3	70.8	58.2
Outdoor Fan Motor	Full Load Amps (1 ECM)	2.8	1.4	1.1
Power Exhaust (1) 0.33 HP	Full Load Amps	2.4	1.3	1
Service Outlet 115V GFI (amps)		15	15	20
Indoor Blower Motor	HP	1.5	1.5	1.5
	Full Load Amps	4.4	2.3	2.3
[2] Maximum Overcurrent Protection (MOCP)	Unit Only	50	20	15
	With (1) 0.33 HP Power Exhaust	50	25	15
[3] Minimum Circuit Ampacity (MCA	Unit Only	32	16	12
	With (1) 0.33 HP Power Exhaust	34	17	13

NOTE - All units have a minimum Short Circuit Current Rating (SCCR) of 5000 amps.

[1] Extremes of operating range are plus and minus 10% of line voltage.

[2] HACR type breaker or fuse.

[3] Refer to National or Canadian Electrical Code manual to determine wire, fuse and disconnect size requirements.

FIELD WIRING NOTES

- For use with copper wiring only
- Field wiring not furnished
- All wiring must conform to NEC or CEC and local electrical codes
- For specific wiring information, please refer to the installation instructions

OUTDOOR SOUND DATA

Size	Octave Band Sound Power Levels dBA, re 10^{-12} Watts Center Frequency - Hz							[1] Sound Rating Number dBA
	125	250	500	1000	2000	4000	8000	
036, 048	63	66	70	71	68	62	53	75
060, 072	67	72	77	76	73	68	61	82

NOTE - The octave sound power data does not include tonal corrections.

[1] 1 Sound Rating Number according to AHRI Standard 270-95 (includes pure tone penalty). Sound Rating Number is the overall A-Weighted Sound Power Level, (Lwa), dBA (100 Hz to 10,000 Hz).

WEIGHT DATA — UNIT

Size	Net		Shipping	
	lbs.	kg	lbs.	kg
036 Base Unit	630	286	691	313
036 Max. Unit	827	375	888	403
048 Base Unit	629	285	690	313
048 Max. Unit	826	375	890	404
060 Base Unit	630	286	691	313
060 Max. Unit	830	376	891	404
072 Base Unit	630	286	691	313
072 Max. Unit	830	376	891	404

FACTORY / FIELD INSTALLED OPTIONS AND ACCESSORIES - NET WEIGHTS

Description		lbs.	kg
ECONOMIZER / OUTDOOR AIR / EXHAUST			
Economizer			
Economizer, Includes Combination Outdoor Air Hood and Barometric Relief Dampers		84	38
Outdoor Air Dampers			
Motorized		40	18
Manual		30	14
Power Exhaust		35	17
GAS HEAT			
Medium Heat (adder over low heat)		8	4
High Heat (adder over standard heat)		19	9
COMBINATION COIL/HAIL GUARDS			
All models		31	14
ROOF CURBS			
Hybrid Roof Curbs, Downflow			
8 in. height		86	39
14 in. height		108	49
18 in. height		125	57
24 in. height		147	67
Adjustable Pitch Curb, Downflow			
14 in. height		147	67
CEILING DIFFUSERS			
Step-Down	RTD9-65S	80	36
	RTD11-95S	118	54
Flush	FD9-65S	80	36
	FD11-95S	118	54
Transitions (Supply and Return)	T1TRAN10AN1	22	10
	T1TRAN20N-1	21	10
HUMIDITROL® DEHUMIDIFICATION SYSTEM			
Humiditrol Dehumidification Option (Net Weight)		27	12

UNIT CLEARANCES

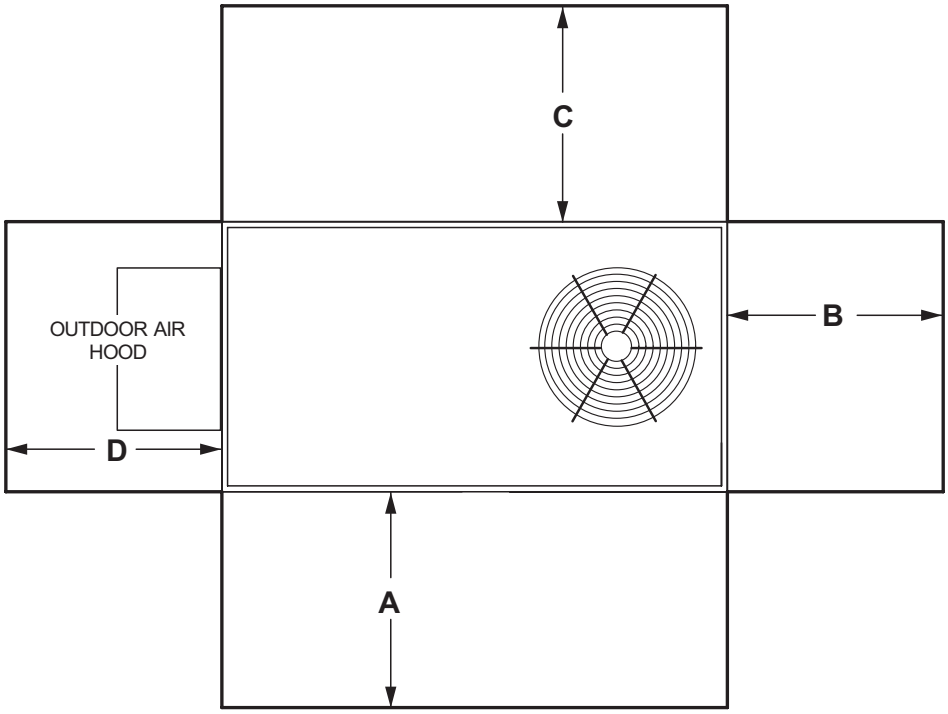

[1] Unit Clearance	A		B		C		D		Top Clearance
	in.	mm	in.	mm	in.	mm	in.	mm	
Service Clearance	48	1219	36	914	36	934	36	914	Unobstructed
Clearance to Combustibles	36	914	1	25	1	25	1	25	
Minimum Operation Clearance	36	914	36	914	36	914	36	914	

NOTE - Entire perimeter of unit base requires support when elevated above the mounting surface.

[1] Service Clearance - Required for removal of serviceable parts.
Clearance to Combustibles - Required clearance to combustible material.
Minimum Operation Clearance - Required clearance for proper unit operation.

DIMENSIONS UNIT

CORNER WEIGHTS									CENTER OF GRAVITY			
Model	AA		BB		CC		DD		EE		FF	
	lbs.	kg	lbs.	kg	lbs.	kg	lbs.	kg	in.	mm	in.	mm
LGT036 Base Unit	131	59	161	73	220	100	179	81	38-1/4	972	19-7/8	505
LGT036 Max. Unit	168	76	207	94	283	128	230	104	39-3/4	1010	19-7/8	505
LGT048 Base Unit	131	59	161	73	220	100	179	81	38-1/4	972	19-7/8	505
LGT048 Max. Unit	169	77	207	94	283	128	230	104	39-3/4	1010	19-7/8	505
LGT060 Base Unit	131	59	161	73	220	100	179	81	38-1/4	972	19-7/8	505
LGT060 Max. Unit	169	77	208	94	284	129	231	105	39-3/4	1010	19-7/8	505
LGT072 Base Unit	131	59	161	73	220	100	179	81	38-1/4	972	19-7/8	505
LGT072 Max. Unit	169	77	208	94	284	129	231	105	39-3/4	1010	19-7/8	505

Base Unit - The unit with NO INTERNAL OPTIONS.

Max. Unit - The unit with ALL INTERNAL OPTIONS Installed. (Economizer, Standard Static Power Exhaust Fans, Controls, etc.). Does not include accessories external to unit or high static power exhaust.

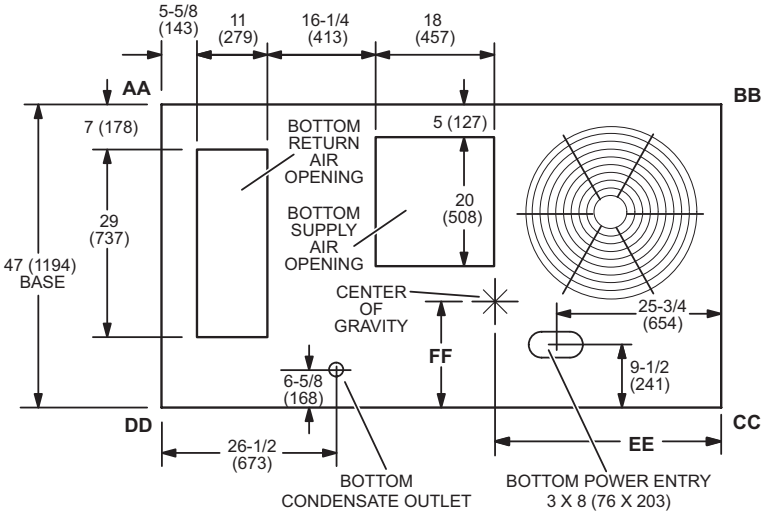

TOP VIEW (Base)

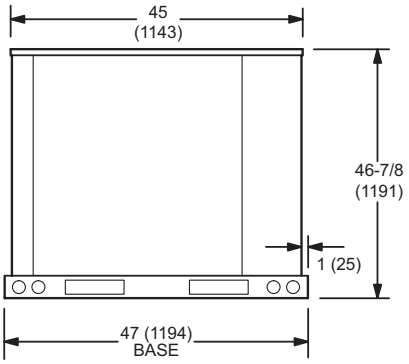

END VIEW

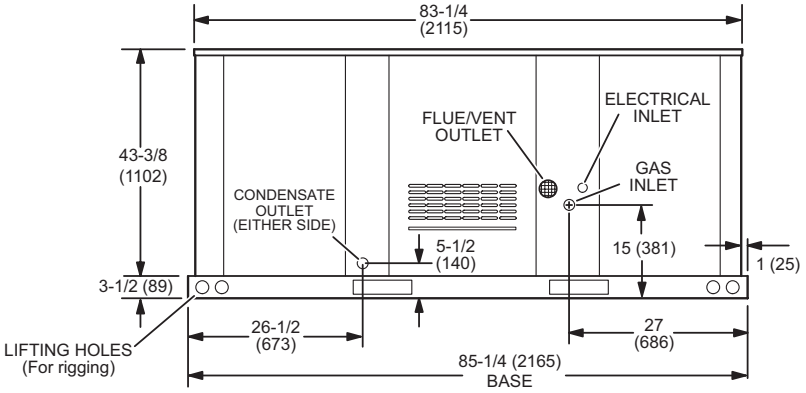

SIDE VIEW

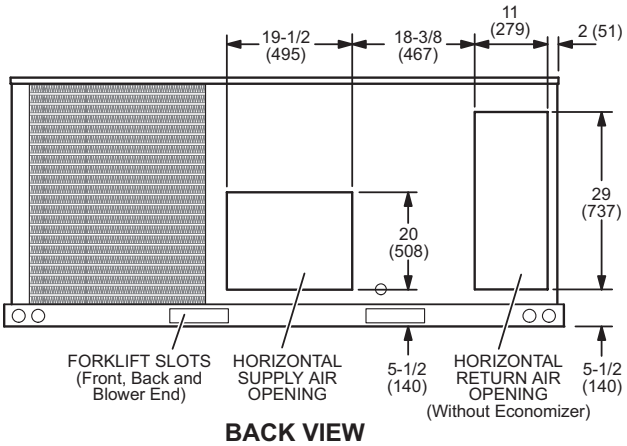

BACK VIEW

COMBINATION OUTDOOR AIR HOOD DETAIL FOR OPTIONAL ECONOMIZER AND BAROMETRIC RELIEF DAMPERS (Furnished With Economizer for Downflow Applications)

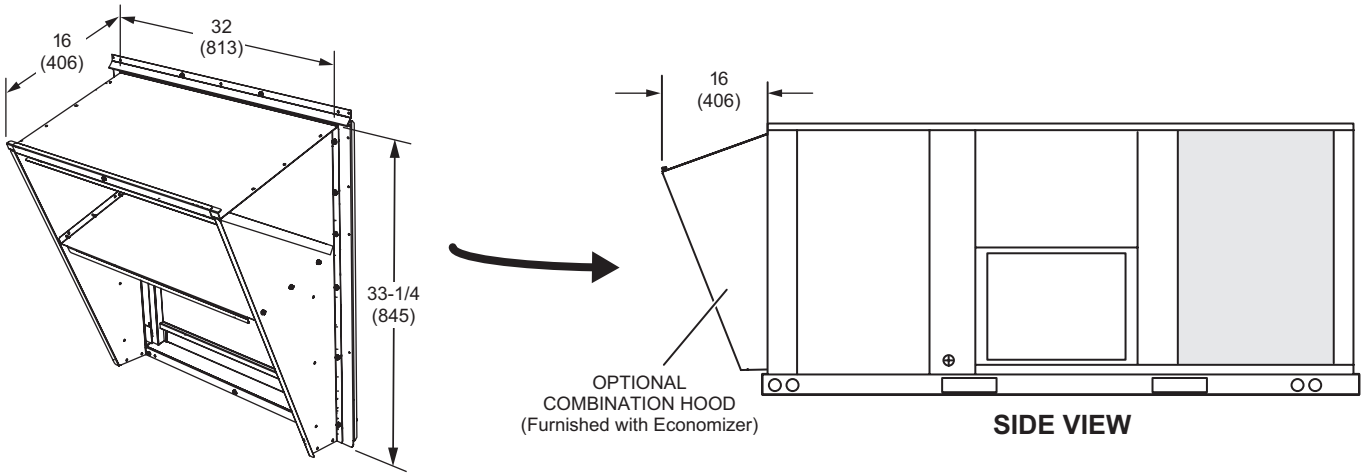

OUTDOOR AIR DAMPER HOOD DETAIL (Downflow or Horizontal Applications)

MANUAL OUTDOOR AIR HOOD

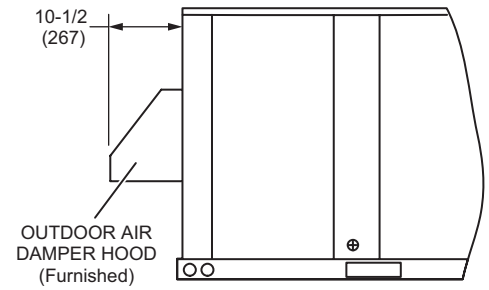

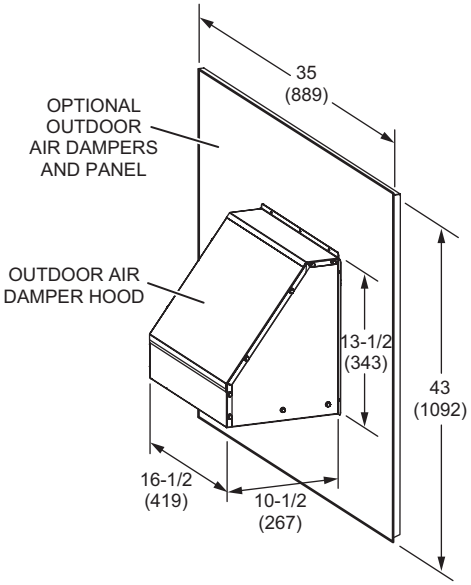

MOTORIZED OUTDOOR AIR HOOD

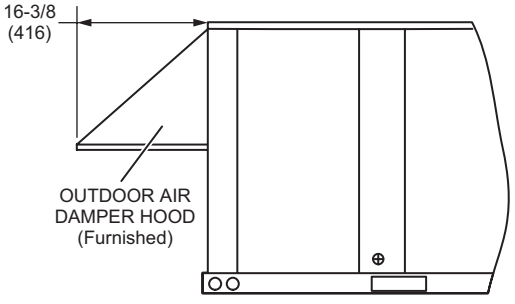

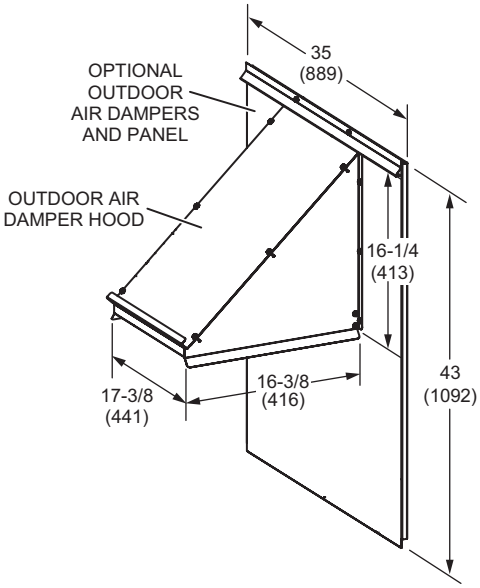

HORIZONTAL ECONOMIZER APPLICATIONS - OUTDOOR AIR HOOD DETAIL WITH OPTIONAL ECONOMIZER DAMPERS AND OPTIONAL HORIZONTAL BAROMETRIC RELIEF DAMPERS AND HOOD

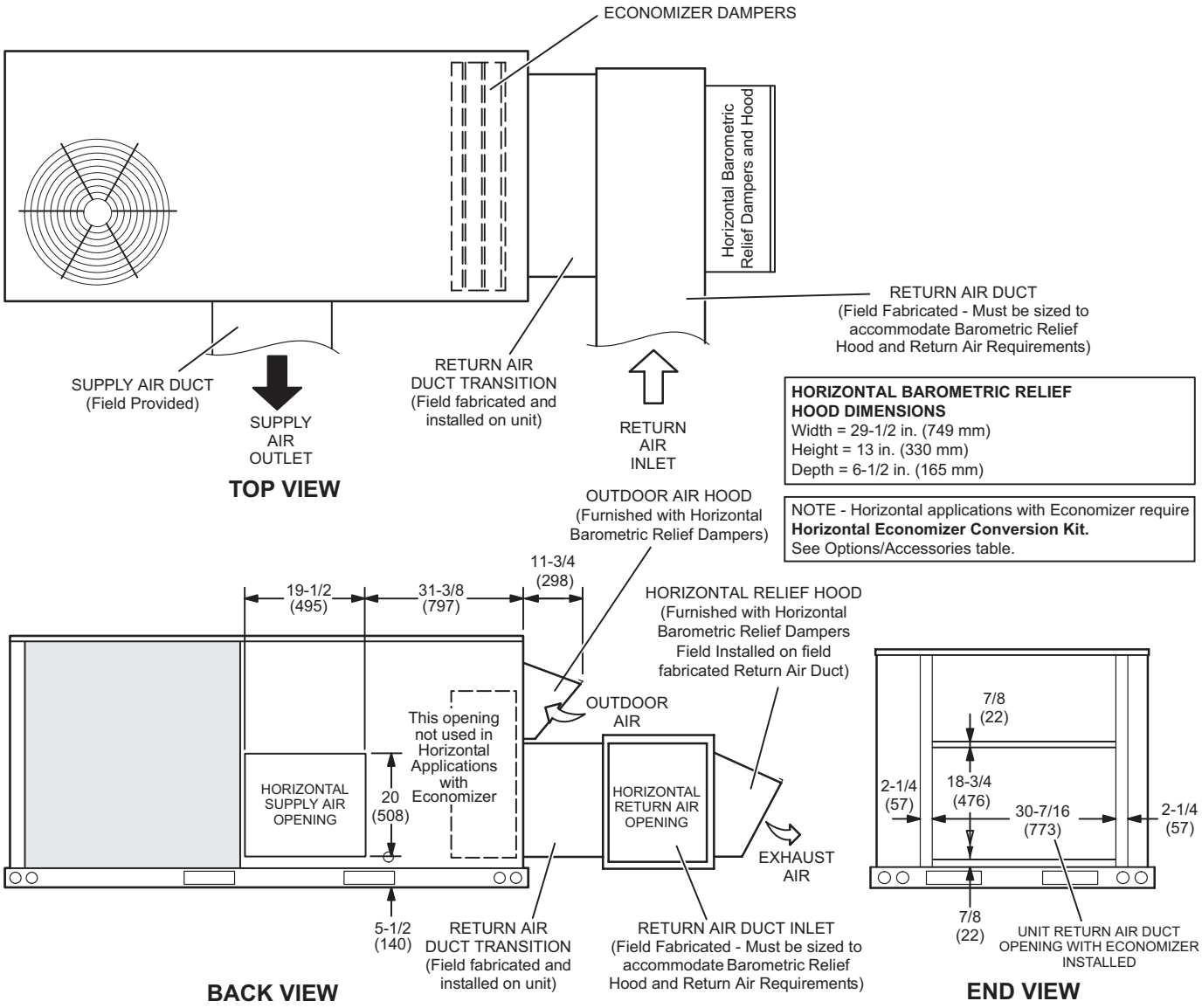

NOTE - Return Air Duct and Transition must be supported.

HYBRID ROOF CURBS - DOUBLE DUCT OPENING

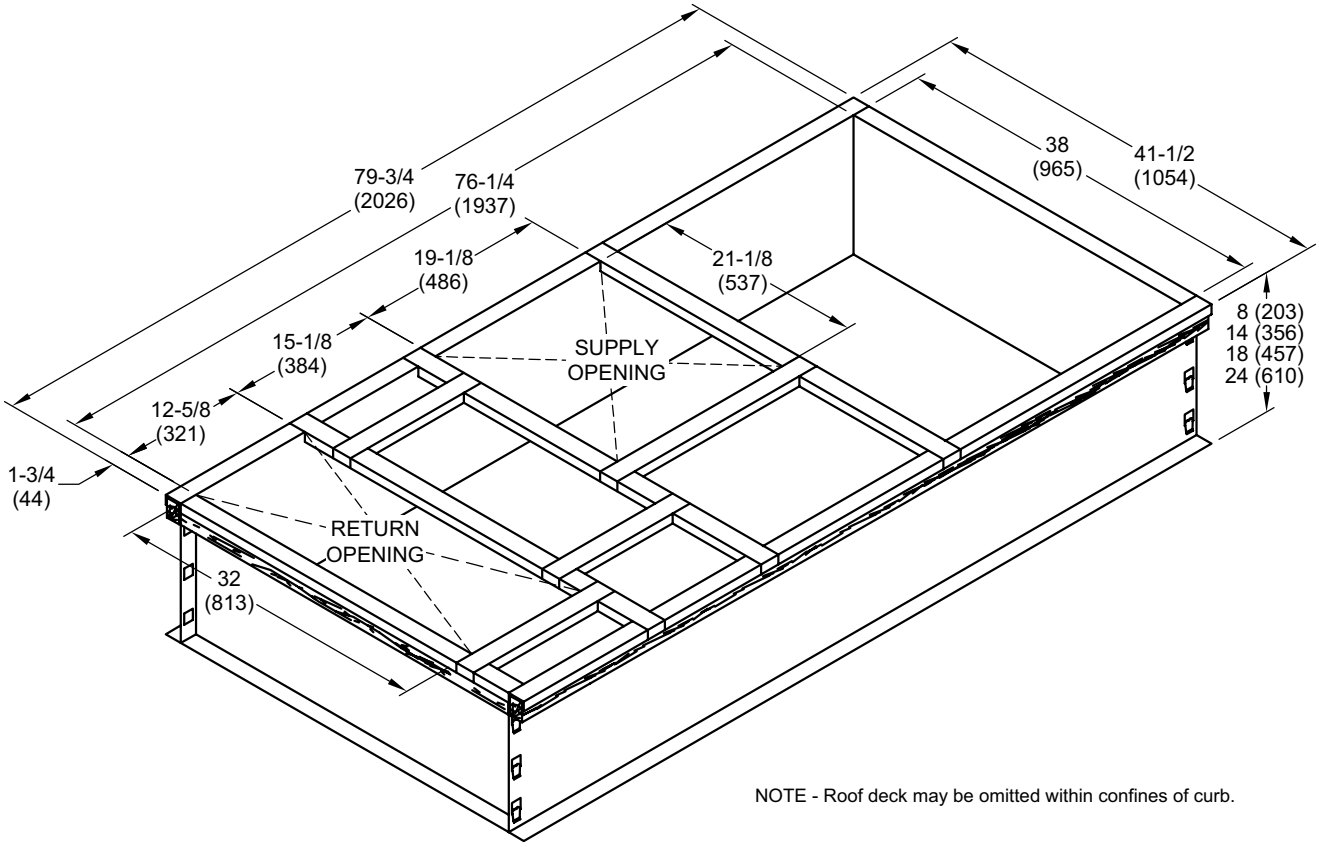

NOTE - Roof deck may be omitted within confines of curb.

TYPICAL FLASHING DETAIL FOR ROOF CURB

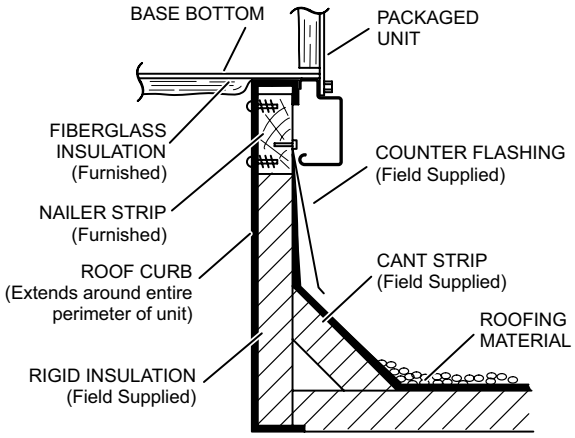

DETAIL ROOF CURB

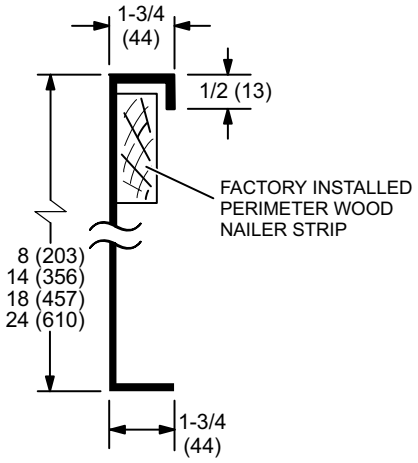

ADJUSTABLE PITCH CURBS - DOUBLE DUCT OPENING

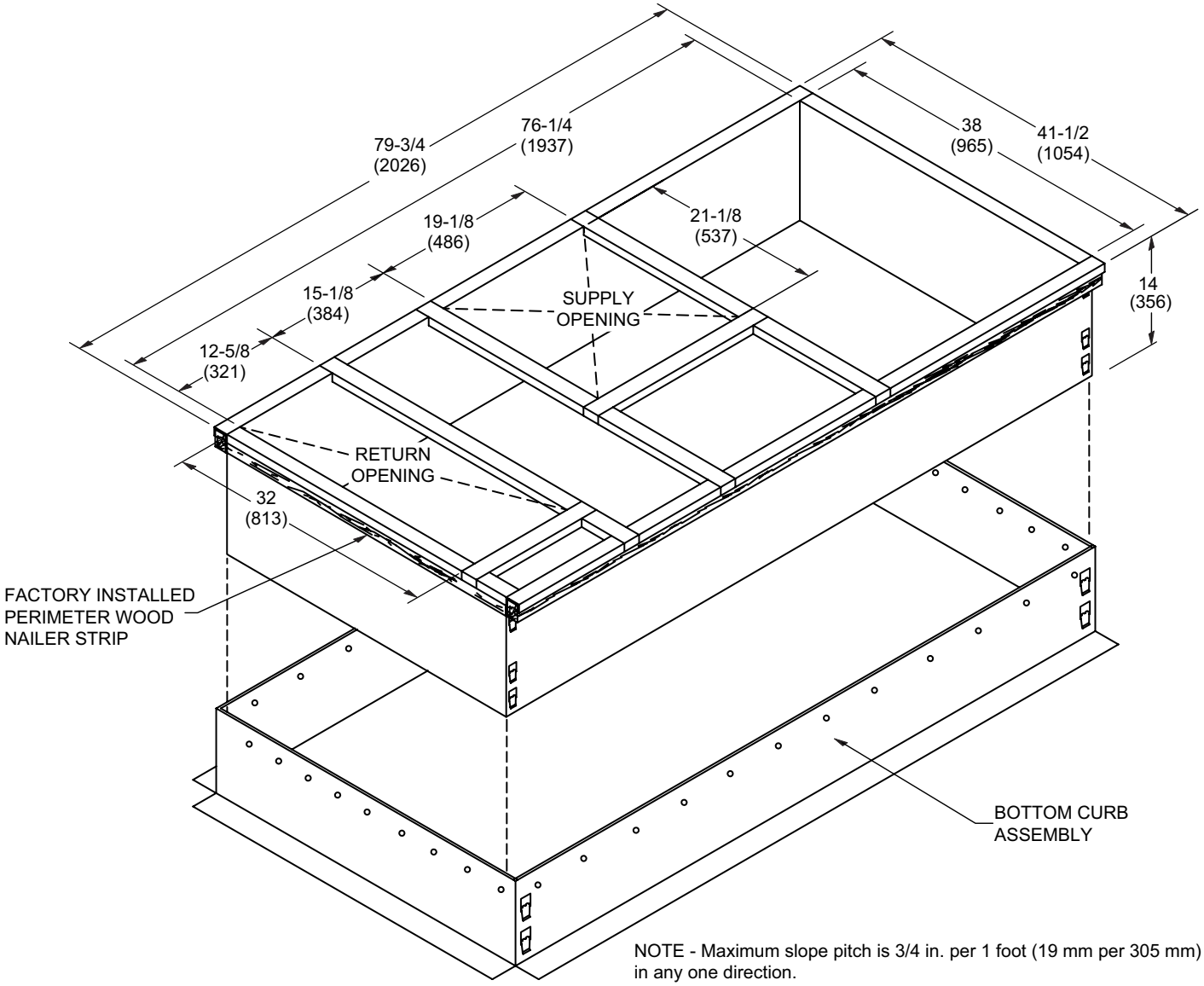

NOTE - Maximum slope pitch is 3/4 in. per 1 foot (19 mm per 305 mm) in any one direction.

TYPICAL FLASHING DETAIL FOR ROOF CURB

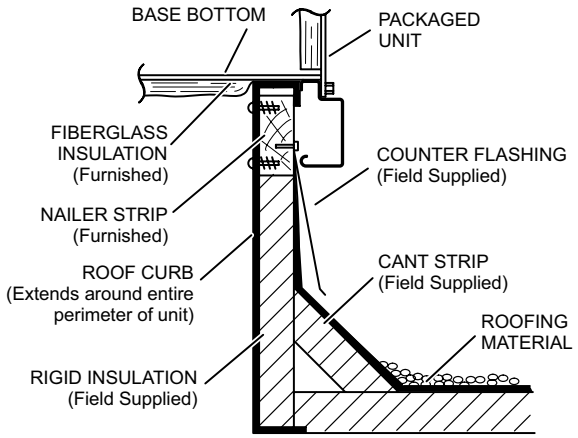

DETAIL ROOF CURB

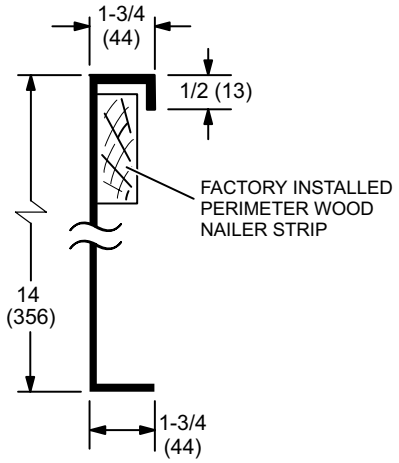

TRANSITIONS

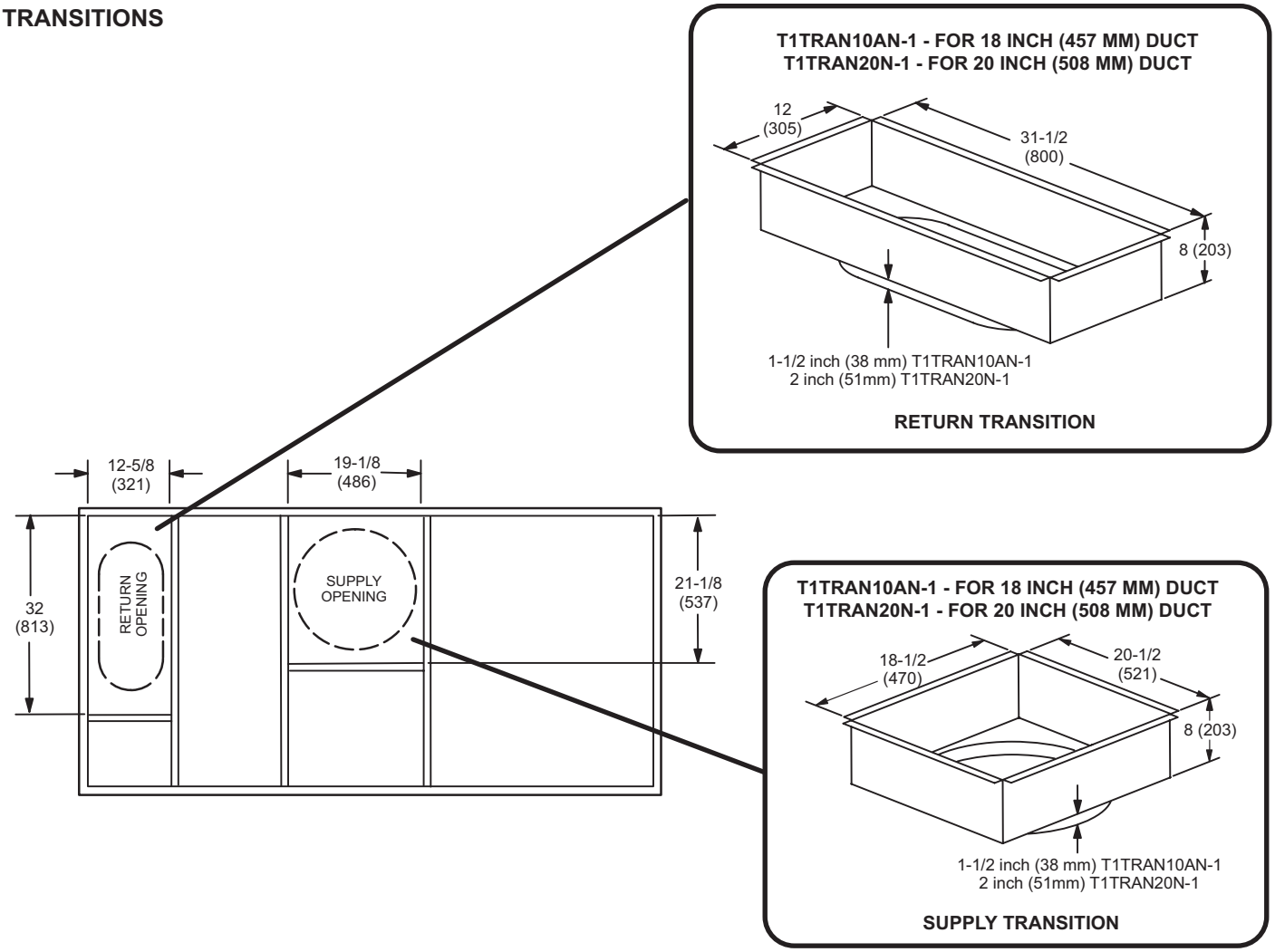

COMBINATION CEILING SUPPLY AND RETURN DIFFUSERS

STEP-DOWN CEILING DIFFUSER

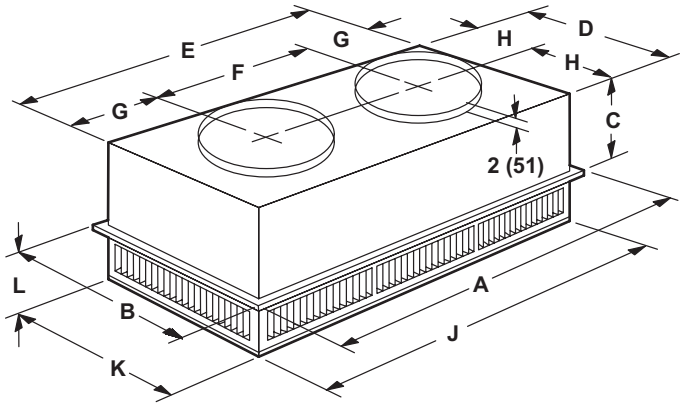

Model		RTD9-65S	RTD11-95S
A	in.	47-5/8	47-5/8
	mm	1159	1159
B	in.	23-5/8	29-5/8
	mm	600	752
C	in.	11-3/8	14-3/8
	mm	289	365
D	in.	21-1/2	27-1/2
	mm	546	699
E	in.	45-1/2	45-1/2
	mm	1156	1158
F	in.	22-1/2	22-1/2
	mm	572	572
G	in.	11-1/2	11-1/2
	mm	292	292
H	in.	10-3/4	13-3/4
	mm	273	349
J	in.	45-1/2	45-1/2
	mm	1156	1156
K	in.	21-1/2	27-1/2
	mm	546	699
L	in.	7-1/8	8-1/8
	mm	181	206
Duct Size	in.	18 round	20 round
	mm	457 round	508 round

FLUSH CEILING DIFFUSER

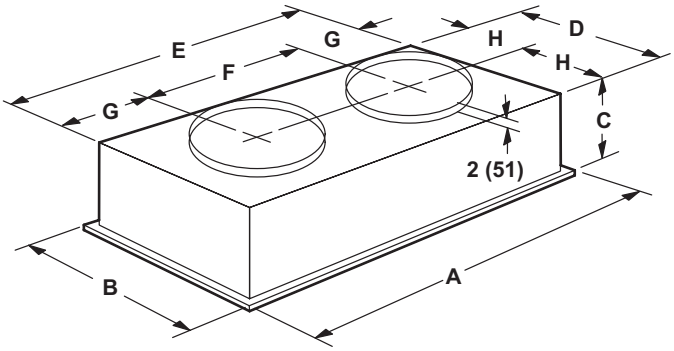

Model		FD9-65S	FD11-95S
A	in.	47-5/8	47-5/8
	mm	1159	1159
B	in.	23-5/8	29-5/8
	mm	600	752
C	in.	13-1/2	16-5/8
	mm	343	422
D	in.	21	27
	mm	533	686
E	in.	45	45
	mm	1143	1143
F	in.	22-1/2	22-1/2
	mm	572	572
G	in.	11-1/4	11-1/4
	mm	286	286
H	in.	10-1/2	13-1/2
	mm	267	343
Duct Size	in.	18 round	20 round
	mm	457 round	508 round

REVISIONS

Sections	Description of Change
Options / Accessories	Added Burglar Bars.

Visit us at www.Lennox.com

For the latest technical information, www.LennoxCommercial.com

Contact us at 1-800-4-LENNOX

NOTE - Due to Lennox' ongoing commitment to quality, Specifications, Ratings and Dimensions subject to change without notice and without incurring liability.
Improper installation, adjustment, alteration, service or maintenance can cause property damage or personal injury.
Installation and service must be performed by a qualified installer and servicing agency.

©2025 Lennox Industries, Inc.